SITE CONSTRUCTION PLANS FOR
EPIPHANY EVANGELICAL LUTHERAN CHURCH
PHASE ONE
SEC10, T18 N, R3E
WESTFIELD, IN 46074

PLANS PREPARED FOR:

HALSTEAD ARCHITECTS
1139 SHELBY STREET
INDIANAPOLIS, IN 46203
TELEPHONE: (317) 684-1431
FAX: (317) 684-1433
CONTACT PERSON: MICHAEL HALSTEAD

PLANS PREPARED BY:

WEIHE ENGINEERS, INC.
10505 N. COLLEGE AVE.
INDIANAPOLIS, INDIANA 46280
TELEPHONE: (317) 846-6611
FAX: (317) 843-0546
CONTACT PERSON: JAMIE SHINNEMAN
EMAIL: SHINNEMANJ@WEIHE.NET

GENERAL NOTES

1) THE CONTRACTOR SHALL BE RESPONSIBLE FOR OBTAINING, OR VERIFYING THAT ALL PERMITS AND APPROVALS ARE OBTAINED FROM THE RESPECTIVE CITY, COUNTY, AND STATE AGENCIES PRIOR TO STARTING CONSTRUCTION.

2) IT SHALL BE THE CONTRACTORS RESPONSIBILITY TO DETERMINE THE EXACT LOCATION OF ALL EXISTING UTILITIES IN THE VICINITY OF THE CONSTRUCTION AREA PRIOR TO STARTING CONSTRUCTION.

3) IT SHALL BE THE CONTRACTORS RESPONSIBILITY TO NOTIFY AND COORDINATE CONSTRUCTION WITH ALL RESPECTIVE UTILITIES.

4) ALL QUANTITIES GIVEN ON THESE PRINTS, VERBALLY OR IN THE SCOPE OF WORK SECTION ARE ESTIMATES AND SHALL BE CONFIRMED BY THE BIDDING CONTRACTORS.

5) OCCUPATIONAL SAFETY AND HEALTH ADMINISTRATION (OSHA) STANDARDS FOR EXCAVATIONS; FINAL RULE 29 CFR PART 1926, SUBPART "P" APPLIES TO ALL EXCAVATIONS EXCEEDING FIVE (5) FEET IN DEPTH.

6) IN ADDITION, EXCAVATION EXCEEDING TWENTY (20) FEET IN DEPTH REQUIRE THE DESIGN OF A TRENCH SAFETY SYSTEM BY A REGISTERED PROFESSIONAL ENGINEER.

7) IT SHALL BE THE RESPONSIBILITY OF THE DEVELOPER AND CONTRACTOR TO MAINTAIN QUALITY CONTROL THROUGHOUT THIS PROJECT.

8) TEMPORARY TRAFFIC CONTROL DURING CONSTRUCTION TO CONFORM TO APPLICABLE LOCAL STANDARDS.

9) THE ENGINEER AND/OR OWNER DISCLAIM ANY ROLE IN THE CONSTRUCTION MEANS AND METHODS ASSOCIATED WITH THE PROJECT AS SET FORTH IN THESE PLANS.

10) ANY FIELD TILES ENCOUNTERED DURING EXCAVATION SHALL BE REPAIRED AND CONNECTED TO NEW STORM SEWERS AND POSITIVE DRAINAGE PRESERVED.

12) THE SITE DOES NOT LIE IN A SPECIAL FLOOD HAZARD AREA AS ESTABLISHED BY THE FEDERAL EMERGENCY MANAGEMENT AGENCY – NATIONAL FLOOD INSURANCE PROGRAM, WHEN PLOTTED BY SCALE ON FLOOD INSURANCE RATE MAP #18057C0120F, DATED FEB 19, 2003.

13) BEARINGS, DIMENSIONS AND EASEMENTS ARE SHOWN FOR REFERENCE ONLY. SEE RECORD SURVEYS & PLAT FOR EXACT INFORMATION.

14) THE SITE DOES NOT CONTAIN A WETLANDS AS ESTABLISHED BY THE U.S. DEPARTMENT OF THE INTERIOR FISH AND WILDLIFE SERVICE; WESTFIELD, INDIANA, NATIONAL WETLANDS INVENTORY MAP DATED 1989.

15) ALL PAVING WITHIN THE EXISTING AND PROPOSED CITY RIGHT OF WAY SHALL CONFORM TO THE REQUIREMENTS OF THE DEPARTMENT OF ENGINEERING. CONTRACTOR SHALL CONTACT THE DEPARTMENT OF ENGINEERING TO SCHEDULE A PRE–CONSTRUCTION MEETING TO REVIEW THE DEPARTMENT'S CONSTRUCTION REQUIREMENTS, STAFF NOTIFICATION REQUIREMENTS REQUIRED INSPECTIONS FOR CERTAIN STAGES OF THE WORK AND TO REVIEW THE AUTHORITY OF THE DEPARTMENT AS IT RELATES TO WORK WITHIN THE EXISTING AND PROPOSED CITY RIGHT OF WAY.

16.) IF IT WILL BE NECESSARY TO RELOCATE EXISTING UTILITIES, THE EXPENSE OF SUCH RELOCATION SHALL BE THE RESPONSIBILITY OF THE DEVELOPER. ALL UTILITY POLES SHALL BE LOCATED WITHIN ONE FOOT OF THE PROPOSED RIGHT–OF–WAY.

OPERATING AUTHORITIES:

CITY OF WESTFIELD
COMMUNITY DEVELOPMENT
ATTENTION: KEVIN TODD
2728 EAST 171ST STREET
WESTFIELD, IN 46074
317–804–3172

HAMILTON COUNTY HEALTH DEPT.
ATTENTION: LARRY BEARD
18030 FOUNDATION DRIVE, SUITE A
NOBLESVILLE, IN 46060–2229
317–776–8500

HAMILTON COUNTY HIGHWAY DEPT.
ATTENTION: DAVE LUCAS
1700 SOUTH 10TH STREET
NOBLESVILLE, IN 46060
317–773–7770

FRONTIER
ATTENTION: STEVE COSTLOW
20905 HAGUE ROAD
NOBLESVILLE, IN 46062
317–984–9010

COMCAST CABLE
ATTENTION: MATT STRINGER
9750 EAST 150TH STREET, STE 1600
NOBLESVILLE, IN 46060
317–774–3384

WESTFIELD DEPT. OF PUBLIC WORKS
ATTENTION: KURT WANNINGER
2706 EAST 171ST STREET
WESTFIELD, IN 46074
317–804–3100

BRIGHTHOUSE NETWORKS
ATTENTION: JASON KIRKMAN
3030 ROOSEVELT AVENUE
INDIANAPOLIS, IN 46218
317–632–9077

AT&T
ATTENTION: STEVE ROBINSON
5858 NORTH COLLEGE AVENUE
INDIANAPOLIS, IN 46220
317–265–6801

TIME WARNER TELECOM
ATTENTION: TANNY TRIPLITT
4625 WEST 86TH STREET, STE 500
INDIANAPOLIS, IN 46268
317–713–8947

VECTREN (GAS)
ATTENTION: CHARLES SHUPPERD
16000 ALLISONVILLE ROAD
NOBLESVILLE, IN 46060
317–776–5535

WESTFIELD FIRE DEPARTMENT
ATTENTION: GARRY HARLING
17535 DARTOWN ROAD
WESTFIELD IN 46074
317–896–2704

HAMILTON COUNTY SURVEYOR'S OFFICE
ATTENTION: GREG HOYES
1 HAMILTON COUNTY SQUARE, STE. 146
NOBLESVILLE, IN 46060
317–776–9626

DUKE ENERGY (ELECTRIC)
ATTENTION: JASON KEENAN
100 SOUTH MILL CREEK ROAD
NOBLESVILLE, IN 46060
317–776–5335

BUCKEYE
ATTENTION: MARTY WHITE
940 BUCKEYE ROAD
LIMA, OH 45804
419–993–8008

MARATHON PETROLEUM LLC
ATTENTION: TERRY THOMPSON
5000 WEST 86TH STREET
INDIANAPOLIS, IN 46268
317–872–3200 X2008

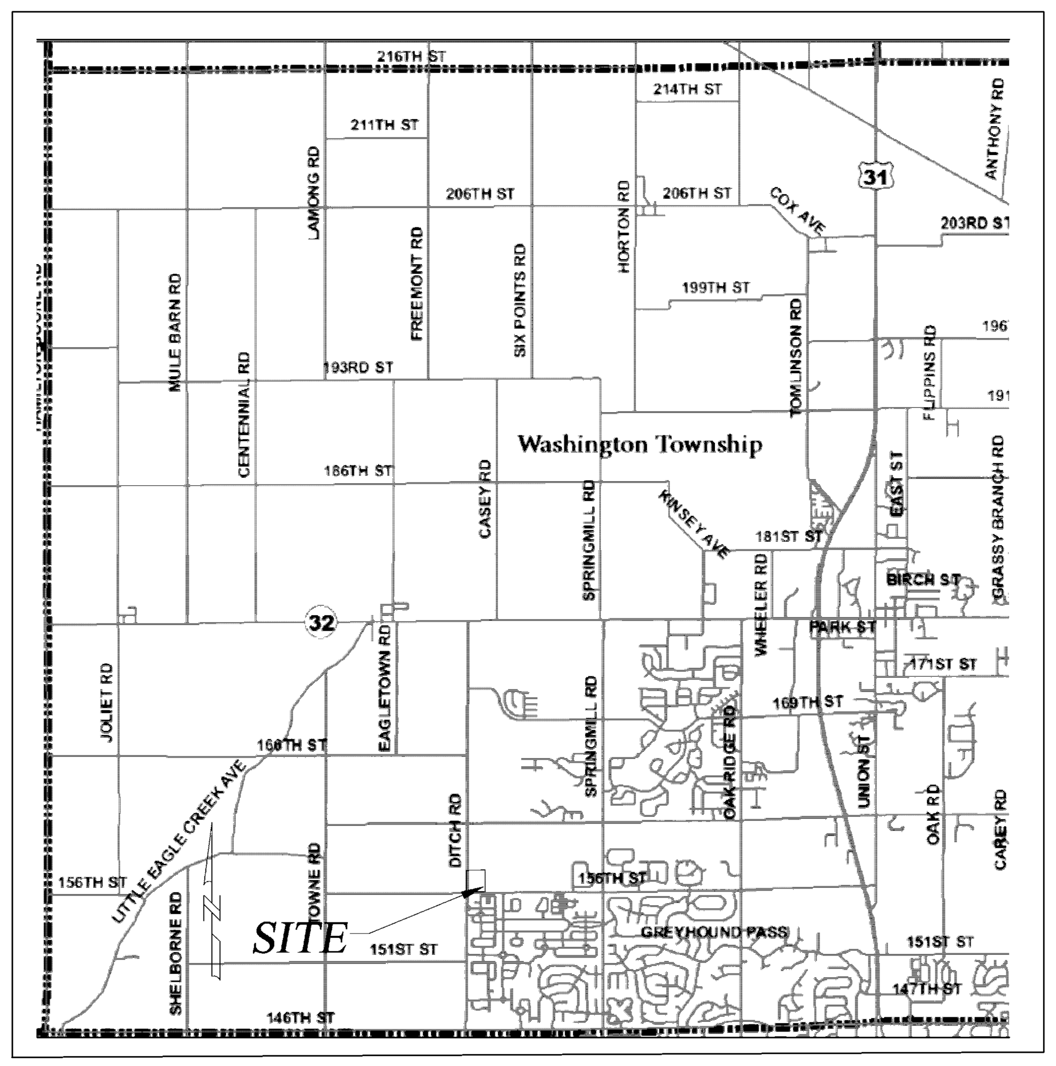

LOCATION MAP

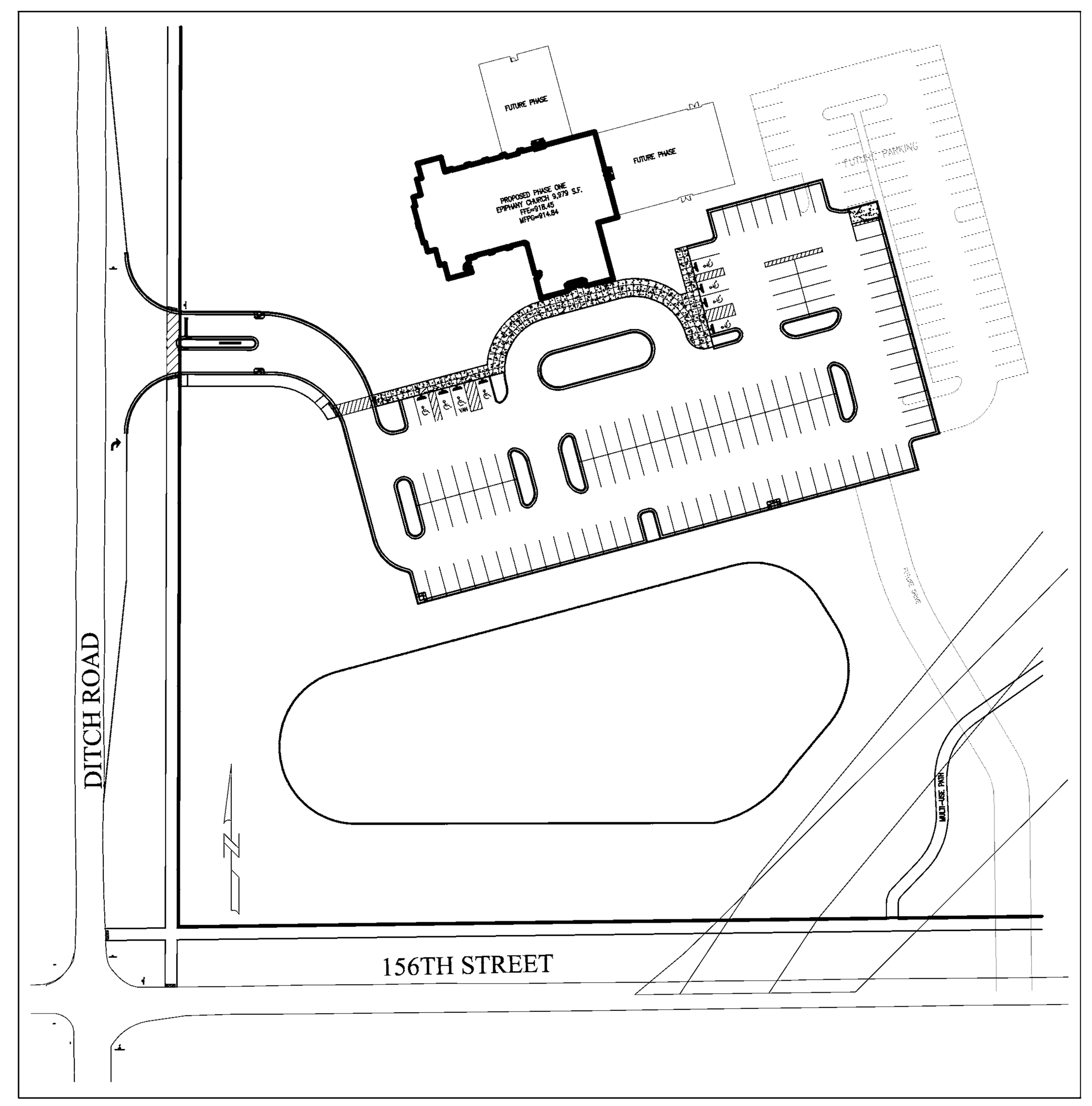

SITE LAYOUT MAP

SHEET INDEX

SHEET NO.	DESCRIPTION
C001	TITLE SHEET
A2.1,A5.1,A5.2	ARCHITECTURAL FLOOR PLAN AND ELEVATIONS (BY OTHERS)
1 OF 1	TOPOGRAPHIC SURVEY
C101	STORMWATER POLLUTION PREVENTION PLAN (PHASE I)
C102	SITE LAYOUT PLAN
C103	GRADING AND DRAINAGE PLAN
C104	STORMWATER POLLUTION PREVENTION PLAN (PHASE II)
C104a	STORMWATER POLLUTION PREVENTION PLAN (PHASE II) SPECIFICATIONS
C105	UTILITY PLAN
C106	MAINTENANCE OF TRAFFIC PLAN
C107–C108	STORM SEWER PLAN & PROFILE
C109	SANITARY SEWER LATERAL PLAN & PROFILE
C201 – C205	CONSTRUCTION DETAILS (CITY OF WESTFIELD)
C301	CONSTRUCTION SPECIFICATIONS
C302 – C303	LPGPS DETAILS AND SPECIFICATIONS
L101	LANDSCAPE PLAN
L201	LANDSCAPE DETAILS

LAND DESCRIPTION:

WARRANTY DEED INSTRUMENT NO. 2012–1063

PART OF THE SOUTHWEST QUARTER OF SECTION 10, TOWNSHIP 18 NORTH, RANGE 3 EAST, 2ND PRINCIPAL MERIDIAN, WASHINGTON TOWNSHIP, HAMILTON COUNTY, INDIANA, MORE PARTICULARLY DESCRIBED AS FOLLOWS:

BEGINNING AT THE SOUTHWEST CORNER OF SAID SOUTHWEST QUARTER; THENCE NORTH 00 DEGREES 09 MINUTES 21 SECONDS EAST ALONG THE WEST LINE OF SAID SOUTHWEST QUARTER (BASIS OF BEARINGS IS THE INDIANA STATE PLANE COORDINATES EAST ZONE) 676.00 FEET; THENCE NORTH 89 DEGREES 17 MINUTES 51 SECONDS EAST PARALLEL WITH THE SOUTH LINE OF SAID SOUTHWEST QUARTER 644.45 FEET; THENCE SOUTH 00 DEGREES 09 MINUTES 21 SECONDS WEST PARALLEL WITH THE WEST LINE OF SAID SOUTHWEST QUARTER 676.00 FEET TO THE SOUTH LINE OF SAID SOUTHWEST QUARTER; THENCE SOUTH 89 DEGREES 17 MINUTES 51 SECONDS WEST ALONG SAID SOUTH LINE 644.45 FEET TO THE POINT OF BEGINNING. CONTAINING 10.000 ACRES, MORE OR LESS.

BENCHMARK INFORMATION

SITE BENCHMARK–HAM 41.
DNR DISK STAMPED HAM 41 1998 ON THE NORTH SIDE OF 156TH STREET, ¼ MILE WEST OF DITCH ROAD.
ELEV – 917.54 (NAVD88)

TBM – CUT "+" ON NE BONNET BOLT OF FIRE HYDRANT AT THE SE QUADRANT OF 156TH STREET AND DITCH ROAD
ELEV – 917.10

NOTE:
THESE PLANS COMPLY WITH ALL ADA REQUIREMENTS

SOILS MAP

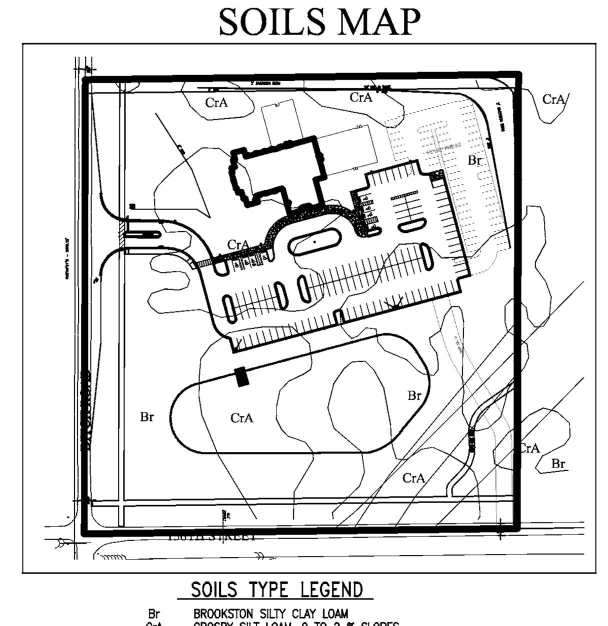

NO SCALE

SOILS TYPE LEGEND
Br BROOKSTON SILTY CLAY LOAM
CrA CROSBY SILT LOAM, 0 TO 2 % SLOPES

BROOKSTON SILTY CLAY LOAM–

1. THIS SOIL IS DARK GREYISH BROWN, SILTY IN TEXTURE. IT IS DEEP AND VERY POORLY DRAINED WITH MODERATE PERMEABILITY. IT HAS HIGH AVAILABLE WATER FOR PLANT GROWTH AND HIGH ORGANIC MATTER CONTENT. IT HAS COMPACT TILL STARTING AT A DEPTH OF 40 TO 60 INCHES. THE MAIN SOIL FEATURES THAT AFFECT THE URBAN DEVELOPMENT USES ARE SEASONAL HIGH WATER TABLE, HIGH POTENTIAL FROST ACTION, MODERATE SHRINK–SWELL POTENTIAL, MODERATE PERMEABILITY AND PONDED SURFACE WATER.

2. BECAUSE OF THESE ENGINEERING LIMITATIONS THIS SITE WILL BE CONSTRUCTED AS FOLLOWS. EPIPHANY LUTHERAN CHURCH, BEING A CHURCH WITHIN THE JURISDICTION OF THE TOWN OF WESTFIELD AND HAMILTON COUNTY WILL HAVE TO ABIDE BY THE APPLICABLE ORDINANCE. SPECIAL CONSIDERATIONS WILL HAVE TO BE IMPLEMENTED TO REDUCE FAILURE OF CONSTRUCTION. ALL BUILDINGS WILL BE OF LARGE SLAB TYPE CONSTRUCTION, BASEMENTS SHOULD BE AVOIDED. IN CASES WHERE A HIGH WATER TABLE IS PRESENT SPECIAL FOOTINGS SHALL BE CONSTRUCTED. ALL ROADS WILL HAVE ADEQUATE SUB–BASE, THE BASE MATERIAL WILL BE REPLACED OR STRENGTHENED WITH SUITABLE MATERIAL. ALL SANITARY SEWERS SHALL BE PUBLIC AND THEREFORE NO SEPTIC SYSTEMS SHALL BE ALLOWED.

CROSBY SILT LOAM, 0–3 PERCENT SLOPES–

1. THIS SOIL IS DARK GRAYISH BROWN SILT LOAM ABOUT 8" THICK, SILTY IN TEXTURE AND ON LOCATED ON SLIGHT RISES ON BROAD, UNDULATING TILL PLAINS. IT IS DEEP AND SOMEWHAT POORLY DRAINED WITH SLOW PERMEABILITY. IT HAS HIGH AVAILABLE WATER FOR PLANT GROWTH AND MEDIUM ORGANIC MATTER CONTENT. THE SOIL HAS COMPACT TILL STARTING AT A DEPTH BETWEEN 20–40 INCHES. THE MAIN SOIL FEATURE THAT AFFECT URBAN DEVELOPMENT USES ARE SEASONAL HIGH WATER TABLE, MODERATE SHRINK SWELL POTENTIAL, HIGH POTENTIAL FROST ACTION AND SLOW PERMEABILITY.

2. BECAUSE OF THESE ENGINEERING LIMITATIONS THIS SITE WILL BE CONSTRUCTED AS FOLLOWS. EPIPHANY LUTHERAN CHURCH, BEING A CHURCH WITHIN THE JURISDICTION OF THE TOWN OF WESTFIELD AND HAMILTON COUNTY WILL HAVE TO ABIDE BY THE APPLICABLE ORDINANCE. SPECIAL CONSIDERATIONS WILL HAVE TO BE IMPLEMENTED TO REDUCE FAILURE OF CONSTRUCTION. ALL BUILDINGS WILL BE OF LARGE SLAB TYPE CONSTRUCTION. IN CASES WHERE A HIGH WATER TABLE IS PRESENT SPECIAL FOOTINGS SHALL BE CONSTRUCTED. ALL ROADS WILL HAVE ADEQUATE SUB–BASE, THE BASE MATERIAL WILL BE REPLACED OR STRENGTHENED WITH SUITABLE MATERIAL. ALL SANITARY SEWERS SHALL BE PUBLIC AND THEREFORE NO SEPTIC SYSTEMS SHALL BE ALLOWED.

MIAMI SILT LOAM, 2 TO 6 PERCENT SLOPES, ERODED

1. THE MAIN SOIL FEATURES THAT ADVERSELY AFFECT ENGINEERING USES OF THIS SOIL ARE MODERATE POTENTIAL FROST ACTION, MODERATELY SLOW PERMEABILITY, MODERATE SHRINK–SWELL POTENTIAL, AND LOW STRENGTH. EROSION IS A HAZARD DURING CONSTRUCTION. THIS SOIL IS SUITABLE FOR BUILDING SITES, BUT SLOPE, CLAYEY TEXTURE, SHRINKING AND SWELLING, AND LOW STRENGTH ARE MODERATE LIMITATIONS THAT NEED TO BE OVERCOME. LOW STRENGTH IS A SEVERE LIMITATION TO THE USE OF THIS SOIL FOR LOCAL ROADS AND STREETS. THE BASE MATERIAL FOR ROADS AND STREETS NEEDS TO BE STRENGTHENED WITH SUITABLE MATERIAL.

Know what's **below.**
Call before you dig.
Within Indiana Call
811 or 800–382–5544
24 Hours a Day, 7 Days a Week.
PER INDIANA STATE LAW IC 8–1–26. IT IS AGAINST THE LAW TO EXCAVATE WITHOUT NOTIFYING THE UNDERGROUND LOCATION SERVICE TWO (2) WORKING DAYS BEFORE COMMENCING WORK.

PRELIMINARY CONSTRUCTION PLANS

10505 N. College Avenue
Indianapolis, Indiana 46280
weihe.net

317 | 846 - 6611
800 | 452 - 6408
317 | 843 - 0546 *fax*

ALLAN H. WEIHE, P.E., L.S. - FOUNDER

WEIHE ENGINEERS
Land Surveying | Civil Engineering
Landscape Architecture

PROJECT NO.: W12.0262
DWG NAME: 120262–C001 title.dwg
DESIGNED BY: EAC/MG
DRAWN BY: EAC/MG
CHECKED BY: JKS
DATE: 06.29.2012

DATE	BY	REVISIONS AND ISSUES

JAMES K. SHINNEMAN REGISTERED NO. 10200392 STATE OF INDIANA PROFESSIONAL ENGINEER
APPROVAL PENDING NOT FOR CONSTRUCTION

JAMES K. SHINNEMAN P.E. 10200392

PREPARED FOR:
EPIPHANY EVANGELICAL LUTHERAN CHURCH PHASE ONE
156TH AND DITCH ROAD, WESTFIELD IN
TITLE SHEET
Part of the SE Corner of SW/1/4 of Section 10, Township 18 North, Range 3 East, Washington Township, Hamilton County, Indiana

SHEET NO.
C001
PROJECT NO.
W12.0262

LOCATION: H:\2012\w120262\Engineering\design\conset\120262–C001 title.dwg
LAYOUT: C001 – Title Sheet
DATE/TIME: June 29, 2012 – 7:54am
PLOTTED BY: cartere

EPIPHANY EVANGELICAL LUTHERAN CHURCH
PRIMARY PLAT
BLOCK A
OF THE CENTENNIAL NORTH
PLANNED UNIT DEVELOPMENT

PLANS PREPARED FOR:

HALSTEAD ARCHITECTS
1139 SHELBY STREET
INDIANAPOLIS, IN 46203
TELEPHONE: (317) 684-1431
FAX: (317) 684-1433
CONTACT PERSON: MICHAEL HALSTEAD

PLANS PREPARED BY:

WEIHE ENGINEERS, INC.
10505 N. COLLEGE AVE.
INDIANAPOLIS, INDIANA 46280
TELEPHONE: (317) 846-6611
FAX: (317) 843-0546
CONTACT PERSON: JAMIE SHINNEMAN
EMAIL: SHINNEMANJ@WEIHE.NET

LAND DESCRIPTION:

WARRANTY DEED INSTRUMENT NO. 2012-1063

PART OF THE SOUTHWEST QUARTER OF SECTION 10, TOWNSHIP 18 NORTH, RANGE 3 EAST, 2ND PRINCIPAL MERIDIAN, WASHINGTON TOWNSHIP, HAMILTON COUNTY, INDIANA, MORE PARTICULARLY DESCRIBED AS FOLLOWS:

BEGINNING AT THE SOUTHWEST CORNER OF SAID SOUTHWEST QUARTER; THENCE NORTH 00 DEGREES 09 MINUTES 21 SECONDS EAST ALONG THE WEST LINE OF SAID SOUTHWEST QUARTER (BASIS OF BEARINGS IS THE INDIANA STATE PLANE COORDINATES EAST ZONE) 676.00 FEET; THENCE NORTH 89 DEGREES 17 MINUTES 51 SECONDS EAST PARALLEL WITH THE SOUTH LINE OF SAID SOUTHWEST QUARTER 644.45 FEET; THENCE SOUTH 00 DEGREES 09 MINUTES 21 SECONDS WEST PARALLEL WITH THE WEST LINE OF SAID SOUTHWEST QUARTER 676.00 FEET TO THE SOUTH LINE OF SAID SOUTHWEST QUARTER; THENCE SOUTH 89 DEGREES 17 MINUTES 51 SECONDS WEST ALONG SAID SOUTH LINE 644.45 FEET TO THE POINT OF BEGINNING. CONTAINING 10.000 ACRES, MORE OR LESS.

LEGEND

FH	=	EXIST. FIRE HYDRANT
WM, WV	=	EXIST. WATER METER/VALVE
	=	EXIST. SIGN
	=	EXIST. MONITOR WELL
• PKF	=	EXIST. IRON PIN & OR PK (SET/FOUND)
GM, GV	=	EXIST. GAS METER
	=	EXIST. GAS VALVE
	=	EXIST. STORM INLET
EM, E, V	=	EXIST. STORM/SAN./TELE. MANHOLE
	=	EXIST. ELECTRIC METER
	=	EXIST. POWER POLE/POWER POLE w/ LIGHT
GA,	=	EXIST. GUY ANCHOR
T, Ped,	=	EXIST. TELEPHONE PEDESTAL
	=	HVAC UNIT
CO	=	EXIST. CLEANOUT
MB	=	MAILBOX
	=	EXIST. LIGHT
BOL	=	EXIST. BOLLARD
	=	EXIST. SANITARY SEWER LINE
	=	EXIST. STORM SEWER LINE
892	=	EXIST. CONTOURS
	=	CONCRETE END SECTION (C.E.S.)
	=	GATE POST
	=	TRANSFORMER
	=	RIGHT-OF-WAY LINE
	=	PROPOSED SANITARY SEWER LINE
	=	PROPOSED STORM SEWER LINE
STM	=	PROPOSED HDPE ROOF DRAIN
	=	PROPOSED PIPE BOLLARD
	=	PROPOSED MANHOLE
892	=	PROPOSED CONTOURS
894.50	=	PROPOSED ELEVATION
	=	DRAINAGE FLOW ARROW
W	=	WATER LINE
G	=	GAS LINE
F.F.E.	=	FINISH FLOOR ELEVATION
TC	=	TOP OF (MANHOLE / INLET) CASTING
INV	=	INVERT (BOTTOM) ELEVATION OF (PIPE)
RCP	=	REINFORCED CONCRETE PIPE
CMP	=	CORRUGATED METAL PIPE
CPP	=	CORRUGATED PLASTIC PIPE
PVC	=	POLYVINYL CHLORIDE PIPE
STR.	=	STRUCTURE
M.E.G.	=	MATCH EXISTING GRADE
SSD	=	SUB-SURFACE DRAINAGE
TOC	=	TOP OF CURB
GUT	=	GUTTER
OUL	=	OVERHEAD UTILITY LINE
T	=	TELEPHONE LINE
TBM	=	TEMPORARY BENCHMARK
E	=	ELECTRIC LINE
	=	CONSTRUCTION LIMITS

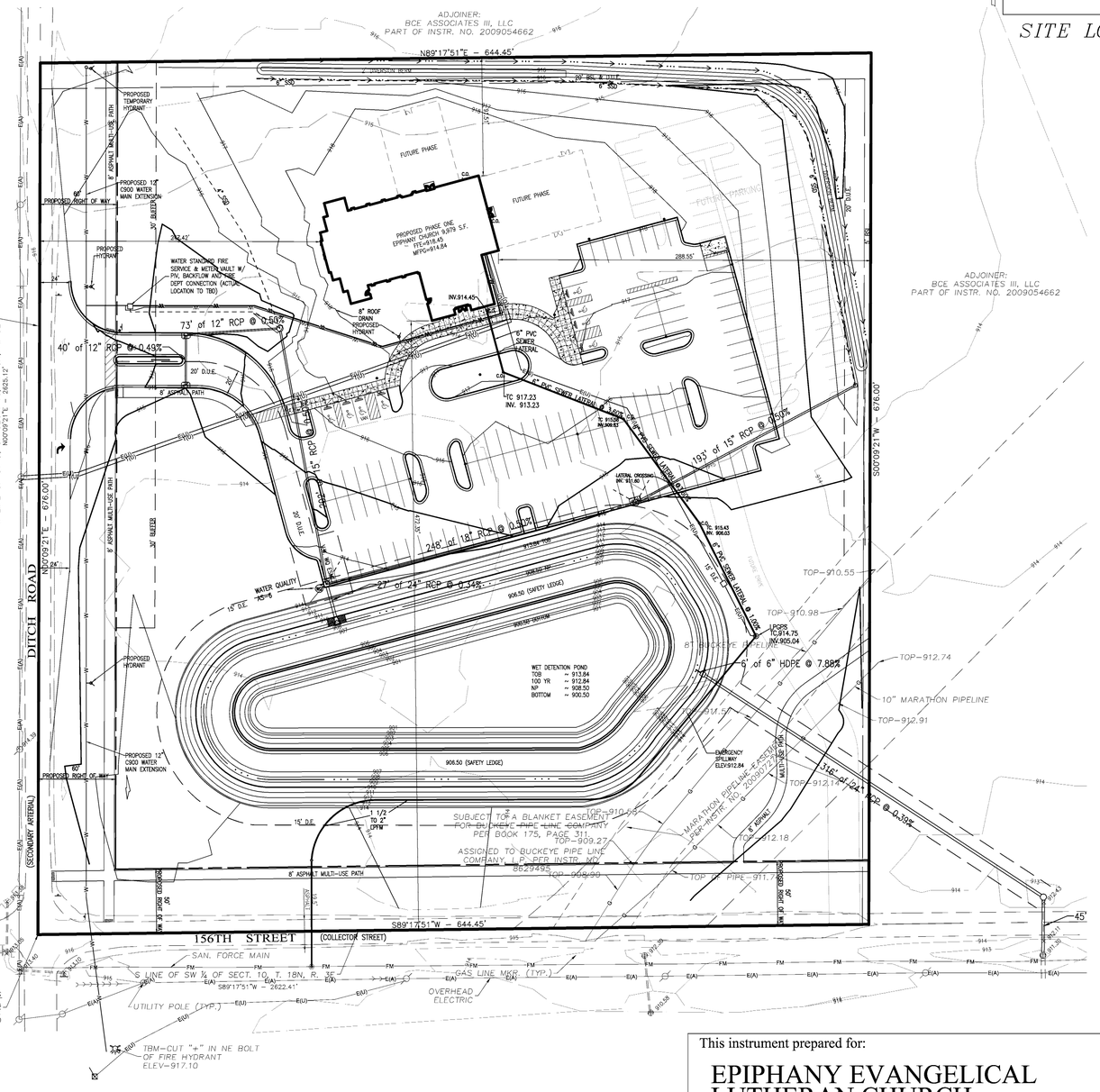

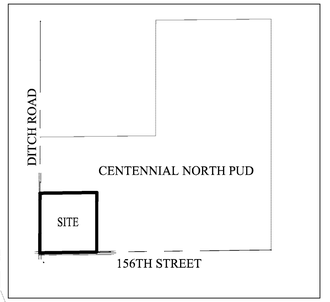

SITE LOCATION MAP

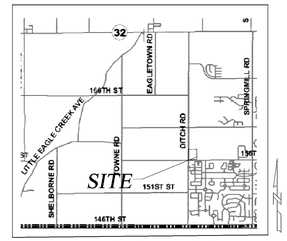

AREA MAP

SOILS MAP

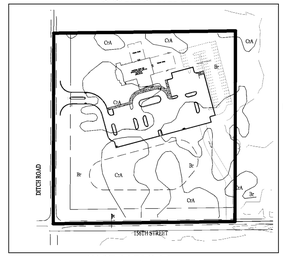

SOILS TYPE LEGEND
Br BROOKSTON SILTY CLAY LOAM
CrA CROSBY SILT LOAM, 0 TO 2 % SLOPES

SOIL MAP

BROOKSTON SILTY CLAY LOAM–

1. THIS SOIL IS DARK GREYISH BROWN, SILTY IN TEXTURE. IT IS DEEP AND VERY POORLY DRAINED WITH MODERATE PERMEABILITY. IT HAS HIGH AVAILABLE WATER FOR PLANT GROWTH AND HIGH ORGANIC MATTER CONTENT. IT HAS COMPACT TILL STARTING AT A DEPTH OF 40 TO 60 INCHES. THE MAIN SOIL FEATURES THAT AFFECT THE URBAN DEVELOPMENT USES ARE SEASONAL HIGH WATER TABLE, HIGH POTENTIAL FROST ACTION, MODERATE SHRINK-SWELL POTENTIAL, MODERATE PERMEABILITY AND PONDED SURFACE WATER.

2. BECAUSE OF THESE ENGINEERING LIMITATIONS THIS SITE WILL BE CONSTRUCTED AS FOLLOWS. EPIPHANY LUTHERAN CHURCH, BEING A CHURCH WITHIN THE JURISDICTION OF THE TOWN OF WESTFIELD AND HAMILTON COUNTY WILL HAVE TO ABIDE BY THE APPLICABLE ORDINANCE. SPECIAL CONSIDERATIONS WILL HAVE TO BE IMPLEMENTED TO REDUCE FAILURE OF CONSTRUCTION. ALL BUILDINGS WILL BE OF LARGE SLAB TYPE CONSTRUCTION, BASEMENTS SHOULD BE AVOIDED. IN CASES WHERE A HIGH WATER TABLE IS PRESENT SPECIAL FOOTINGS SHALL BE CONSTRUCTED. ALL ROADS WILL HAVE ADEQUATE SUB-BASE, THE BASE MATERIAL WILL BE REPLACED OR STRENGTHENED WITH SUITABLE MATERIAL. ALL SANITARY SEWERS SHALL BE PUBLIC AND THEREFORE NO SEPTIC SYSTEMS SHALL BE ALLOWED.

CROSBY SILT LOAM, 0-3 PERCENT SLOPES–

1. THIS SOIL IS DARK GRAYISH BROWN SILT LOAM ABOUT 8" THICK, SILTY IN TEXTURE AND ON LOCATED ON SLIGHT RISES ON BROAD, UNDULATING TILL PLAINS. IT IS DEEP AND SOMEWHAT POORLY DRAINED WITH SLOW PERMEABILITY. IT HAS HIGH AVAILABLE WATER FOR PLANT GROWTH AND MEDIUM ORGANIC MATTER CONTENT. THE SOIL HAS COMPACT TILL STARTING AT A DEPTH BETWEEN 20-40 INCHES. THE MAIN SOIL FEATURE THAT AFFECT URBAN DEVELOPMENT USES ARE SEASONAL HIGH WATER TABLE, MODERATE SHRINK SWELL POTENTIAL, HIGH POTENTIAL FROST ACTION AND SLOW PERMEABILITY.

2. BECAUSE OF THESE ENGINEERING LIMITATIONS THIS SITE WILL BE CONSTRUCTED AS FOLLOWS. EPIPHANY LUTHERAN CHURCH, BEING A CHURCH WITHIN THE JURISDICTION OF THE TOWN OF WESTFIELD AND HAMILTON COUNTY WILL HAVE TO ABIDE BY THE APPLICABLE ORDINANCE. SPECIAL CONSIDERATIONS WILL HAVE TO BE IMPLEMENTED TO REDUCE FAILURE OF CONSTRUCTION. ALL BUILDINGS WILL BE OF LARGE SLAB TYPE CONSTRUCTION. IN CASES WHERE A HIGH WATER TABLE IS PRESENT SPECIAL FOOTINGS SHALL BE CONSTRUCTED. ALL ROADS WILL HAVE ADEQUATE SUB-BASE, THE BASE MATERIAL WILL BE REPLACED OR STRENGTHENED WITH SUITABLE MATERIAL. ALL SANITARY SEWERS SHALL BE PUBLIC AND THEREFORE NO SEPTIC SYSTEMS SHALL BE ALLOWED.

MIAMI SILT LOAM, 2 TO 6 PERCENT SLOPES, ERODED

1. THE MAIN SOIL FEATURES THAT ADVERSELY AFFECT ENGINEERING USES OF THIS SOIL ARE MODERATE POTENTIAL FROST ACTION, MODERATELY SLOW PERMEABILITY, MODERATE SHRINK-SWELL POTENTIAL, AND LOW STRENGTH. EROSION IS A HAZARD DURING CONSTRUCTION. THIS SOIL IS SUITABLE FOR BUILDING SITES, BUT SLOPE, CLAYEY TEXTURE, SHRINKING AND SWELLING, AND LOW STRENGTH ARE MODERATE LIMITATIONS THAT NEED TO BE OVERCOME. LOW STRENGTH IS A SEVERE LIMITATION TO THE USE OF THIS SOIL FOR LOCAL ROADS AND STREETS. THE BASE MATERIAL FOR ROADS AND STREETS NEEDS TO BE STRENGTHENED WITH SUITABLE MATERIAL.

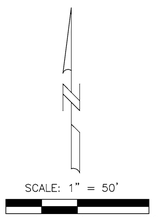

This instrument prepared for:

EPIPHANY EVANGELICAL LUTHERAN CHURCH
1948 State Road 32, Westfield, IN 46074
PHONE: 317-989-0403

This instrument prepared by:

WEIHE ENGINEERS
Land Surveying | Civil Engineering
Landscape Architecture

10505 N. College Avenue
Indianapolis, Indiana 46280
weihe.net

317 | 846 - 6611
800 | 452 - 6408
317 | 843 - 0546 *fax*

ALLAN H. WEIHE, P.E., L.S. - FOUNDER

LOCATION: I:\2012\w12026\Engineering\Design\Cover\primary plat.dwg
DATE/TIME: June 28, 2012 - 8:15pm
PLOTTED BY: Michael Halstead

SITE BENCHMARK–HAM 41.
DNR DISK STAMPED HAM 41
1998 ON THE NORTH SIDE
OF 156TH STREET, ½ MILE
WEST OF DITCH ROAD.
ELEV – 917.54 (NAVD88)

TBM – CUT "+" ON NE
BONNET BOLT OF FIRE
HYDRANT AT THE SE
QUADRANT OF 156TH
STREET AND DITCH ROAD
ELEV – 917.10

SCALE: 1" = 40'
0 20 40 80

LAND DESCRIPTION
Warranty Deed Instrument No. 2012-1063

Part of the Southwest Quarter of Section 10, Township 18 North, Range 3 East, 2nd Principal Meridian, Washington Township, Hamilton County, Indiana, more particularly described as follows:

***BEGINNING** at the southwest corner of said Southwest Quarter; thence North 00 degrees 09 minutes 21 seconds East along the west line of said Southwest Quarter (basis of bearings is the Indiana State Plane Coordinates East Zone) 676.00 feet; thence North 89 degrees 17 minutes 51 seconds East parallel with the south line of said Southwest Quarter 644.45 feet; thence South 00 degrees 09 minutes 21 seconds West parallel with the west line of said Southwest Quarter 676.00 feet to the south line of said Southwest Quarter; thence South 89 degrees 17 minutes 51 seconds West along said south line 644.45 feet to the **POINT OF BEGINNING**. Containing 10.000 acres, more or less.*

This survey was performed under the direction of the undersigned, and to the best of this surveyor's knowledge and belief was executed according to survey requirements in 865 IAC 1.12 for the State of Indiana and to the best of this surveyor's knowledge and belief, represents a topographic survey performed under my supervision on May 29, 2012.

Dated June 25, 2012

Brady Kuhn, Registered Land Surveyor #20500007
State of Indiana

BRADY KUHN REGISTERED No. 20500007 STATE OF INDIANA LAND SURVEYOR

NOTE: Boundary shown hereon based on an ALTA/ACSM Land Title Survey prepared by American Structurepoint under Job No. 201100778, dated 12/23/11. Monuments shown (MAG nails and a capped rebar) on said survey were found and utilized for horizontal control.

Representatives of the Buckeye and Marathon Pipeline Companies probed the actual depths of their respective pipelines on May 28, 2012. Those depths are shown hereon.

SURVEYOR'S NOTE: ON FEBRUARY 6, 2012, WEIHE ENGINEERS SUBMITTED DOCUMENTATION TO THE RIGHT OF WAY DEPARTMENT OF BUCKEYE PIPE LINE COMPANY, REQUESTING THAT THE BLANKET–TYPE EASEMENT, CURRENTLY IN EFFECT AND IN FAVOR OF BUCKEYE, BE PARTIALLY RELEASED.

10505 N. College Avenue
Indianapolis, Indiana 46280
weihe.net
317 | 846 - 6611
800 | 452 - 6408
317 | 843 - 0546 fax
ALLAN H. WEIHE, P.E., L.S. - FOUNDER

WEIHE ENGINEERS
Land Surveying | Civil Engineering
Landscape Architecture

PROJECT NO.: W120262
DWG NAME:
FIELD BY: RB
DRAWN BY: SH
CHECKED BY:
DATE: 6/25/12

REVISIONS AND ISSUES	DATE	BY

PREPARED FOR:
Halstead Architects
SITE ADDRESS – N.E. CORNER OF 156TH STREET AND DITCH ROAD, WESTFIELD, IN

TOPOGRAPHIC SURVEY
PT. SW 1/4 SEC. 10, T18N, R3E, WASHINGTON TWP., HAMILTON CO., IN

SHEET NO. 1 OF 1
PROJECT NO. W120262

LOCATION: N:\2012\W120262\Survey\W120262.dwg
LAYOUT: TOPO @ 40 SCALE
PLOTTED: Jun 25, 2012 – 11:35am
PLOTTED By: Sean Hicks

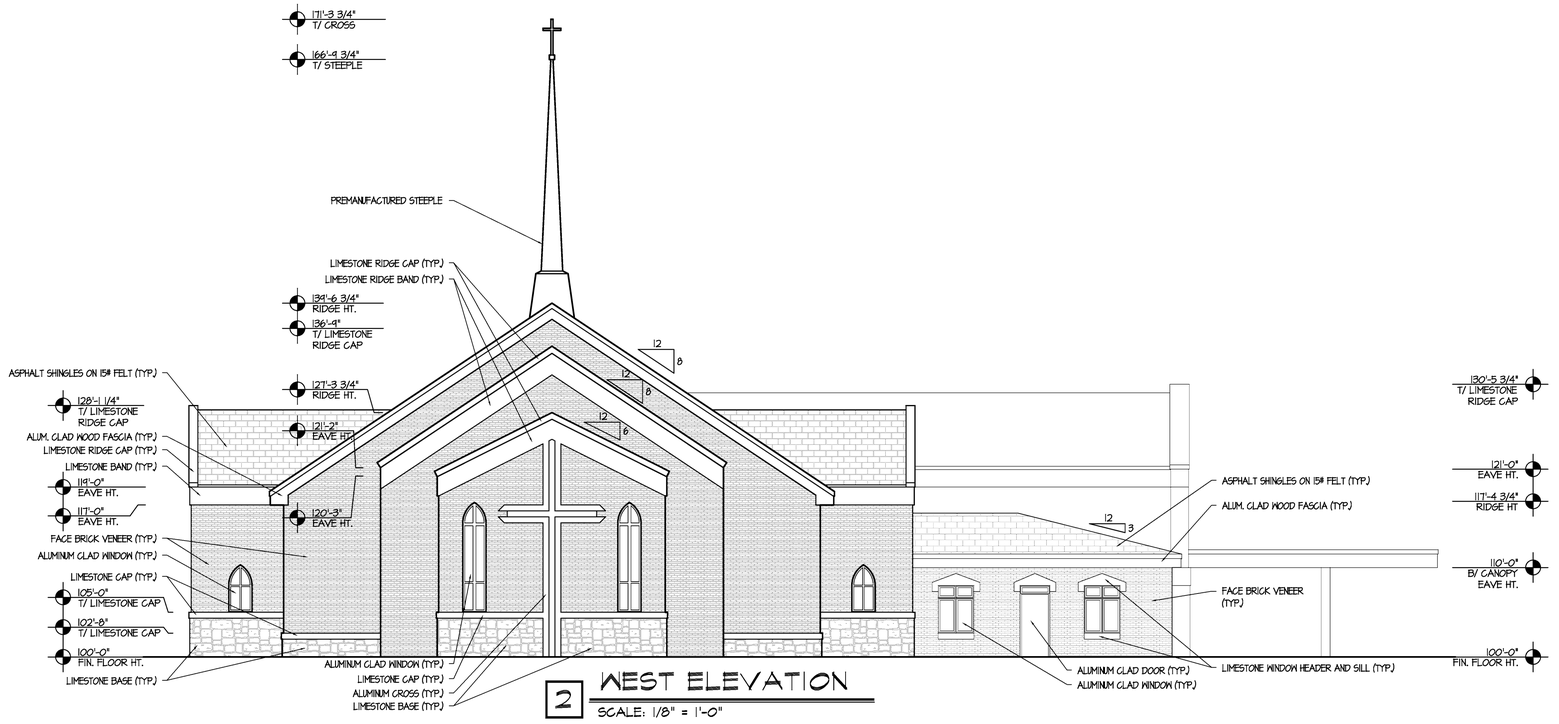

2 WEST ELEVATION

SCALE: 1/8" = 1'-0"

1 SOUTH ELEVATION

SCALE: 1/8" = 1'-0"

HALSTEADarchitects

1139 SHELBY STREET
INDIANAPOLIS, INDIANA 46203.1165 USA
TEL.317.684.1431 FAX.317.684.1433
NET WWW.HALSTEAD-ARCHITECTS.COM

CERTIFIED BY:

PRELIMINARY NOT FOR CONSTRUCTION

EPIPHANY EVANGELICAL LUTHERAN CHURCH

156TH STREET AND DITCH ROAD
WESTFIELD, INDIANA

DRAWING
BUILDING ELEVATIONS

ISSUE
TAC Submission - 06/29/12

REVISIONS
1
2 ---
3 ---
4 ---

PROJECT NO.
1209

DATE
06/29/2012

DRAWING NO.
A5.1

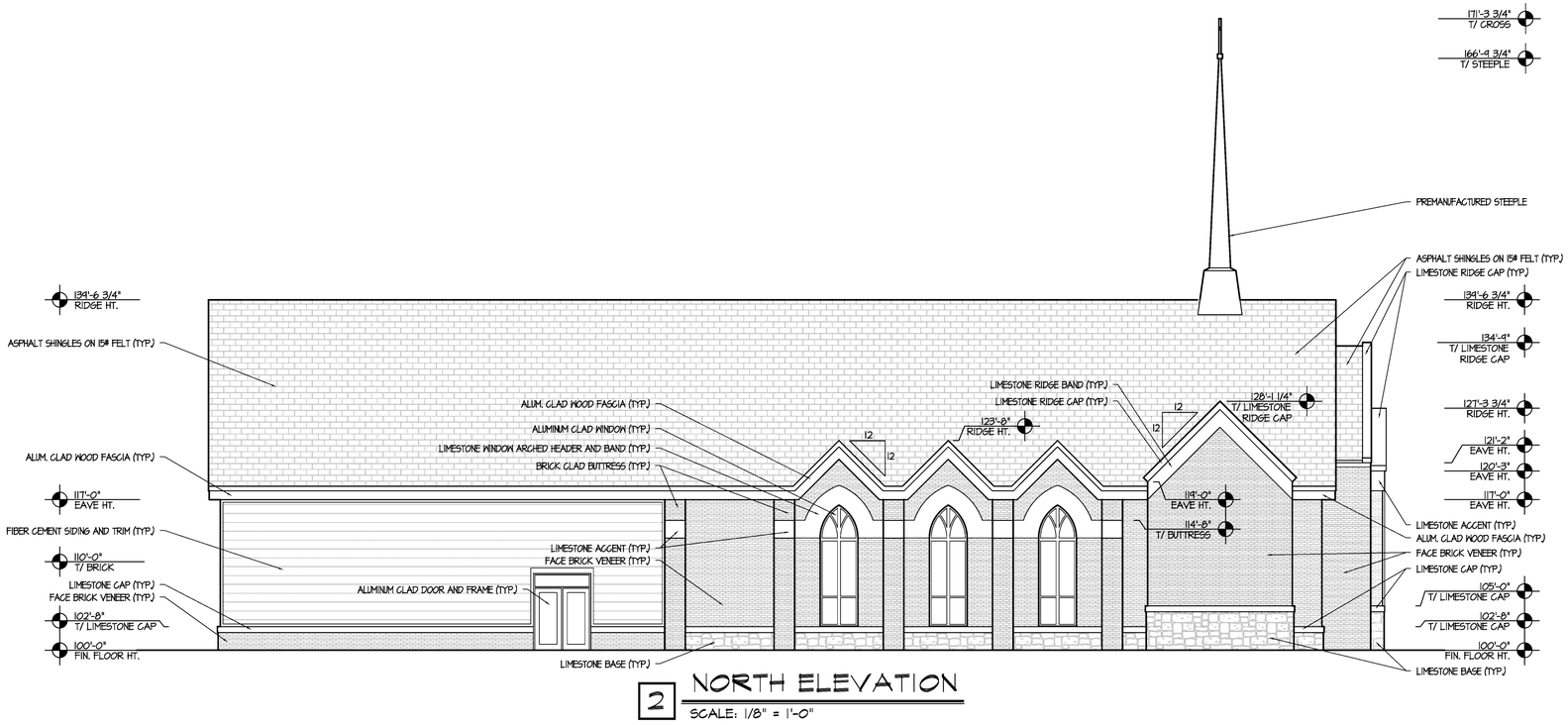

2 NORTH ELEVATION

SCALE: 1/8" = 1'-0"

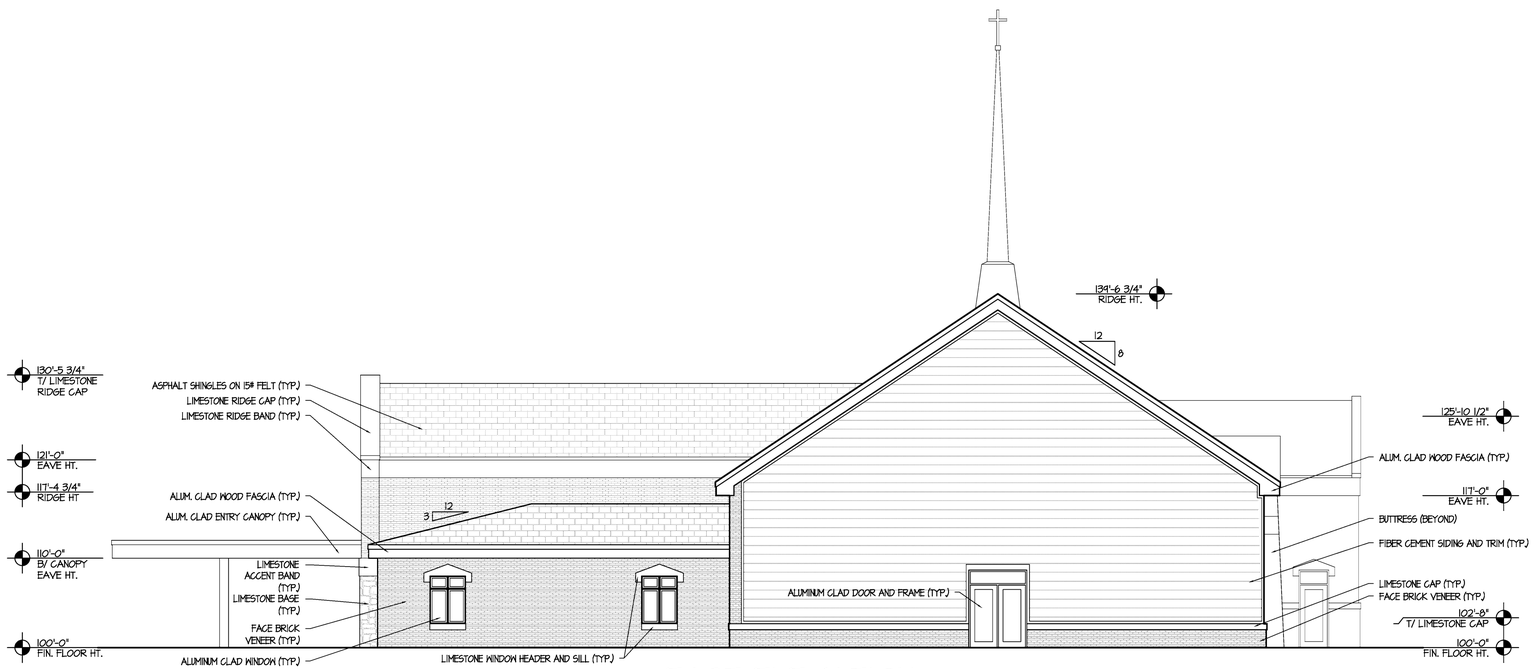

1 EAST ELEVATION

SCALE: 1/8" = 1'-0"

HALSTEADarchitects

1139 SHELBY STREET
INDIANAPOLIS, INDIANA 46203.1165 USA
TEL.317.684.1431 FAX.317.684.1433
NET WWW.HALSTEAD-ARCHITECTS.COM

CERTIFIED BY:

PRELIMINARY NOT FOR CONSTRUCTION

EPIPHANY EVANGELICAL LUTHERAN CHURCH

156TH STREET AND DITCH ROAD
WESTFIELD, INDIANA

DRAWING

BUILDING ELEVATIONS

ISSUE

TAC Submission - 06/29/12

REVISIONS

1	
2	----
3	----
4	----

PROJECT NO. 1209

DATE 06/29/2012

DRAWING NO.

A5.2

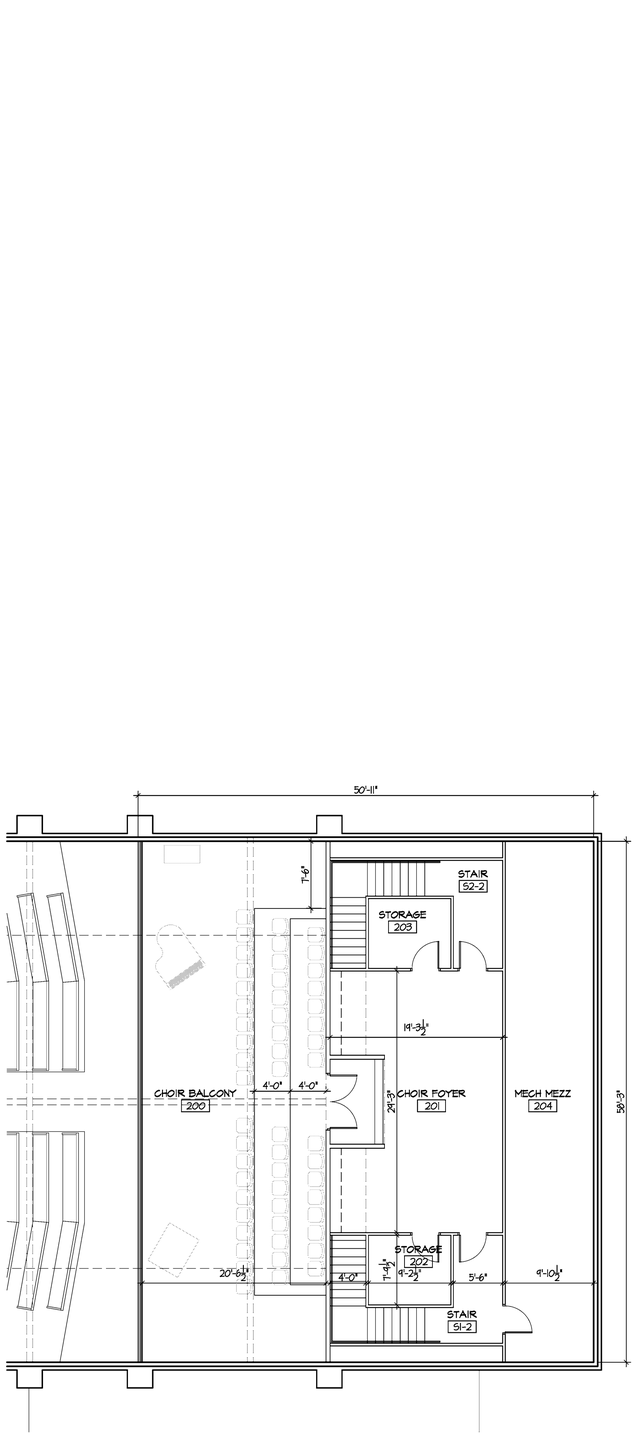

2 BALCONY FLOOR PLAN

NORTH

SCALE: ⅛" = 1'-0"

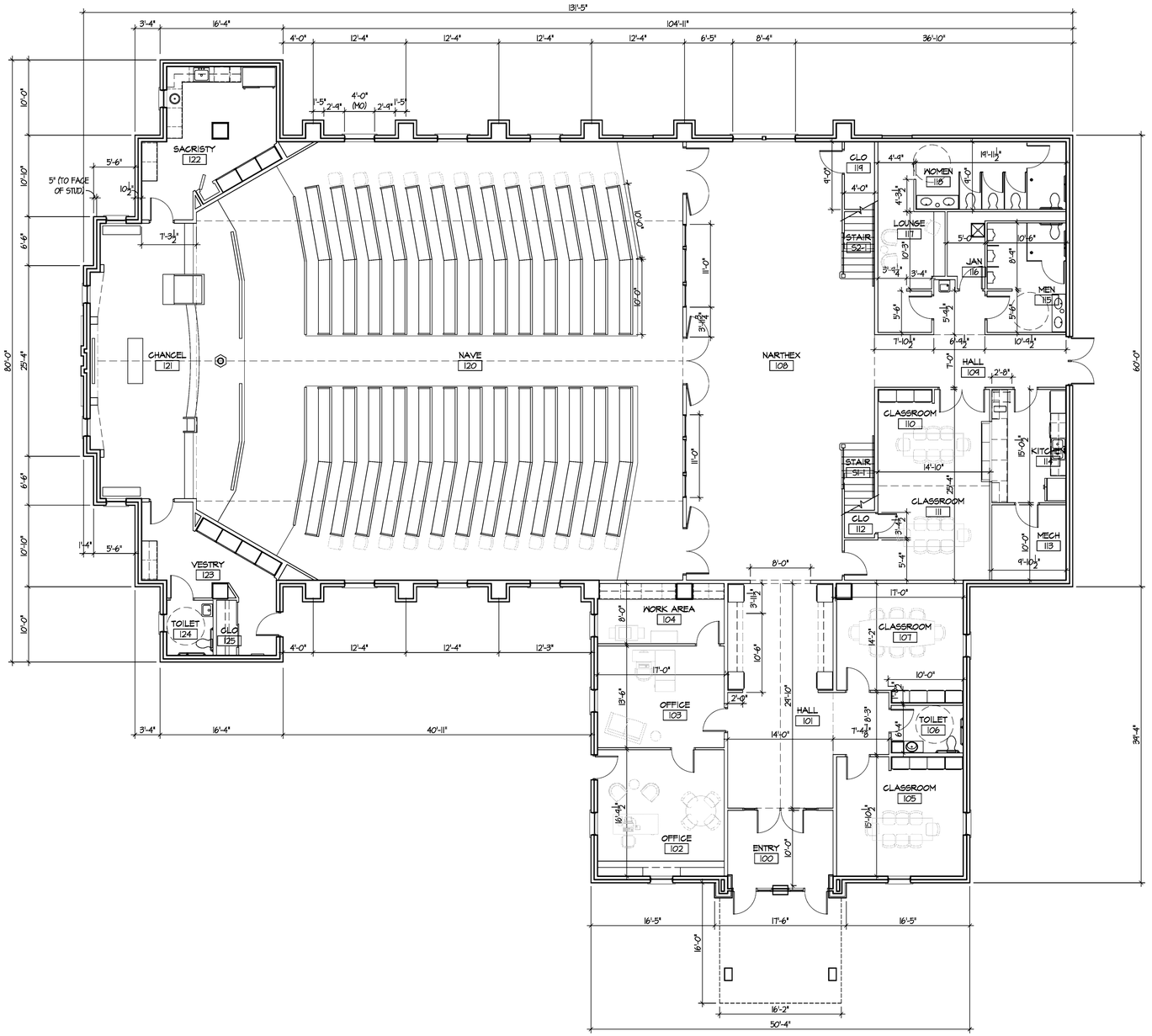

1 FIRST FLOOR PLAN

NORTH

SCALE: ⅛" = 1'-0"

© 2012 Halstead Architects All Rights Reserved

HALSTEADarchitects

1139 SHELBY STREET
INDIANAPOLIS, INDIANA 46203.1955 USA
TEL.317.684.1431 FAX.317.684.1433
NET WWW.HALSTEAD-ARCHITECTS.COM

CERTIFIED BY:

PRELIMINARY NOT FOR CONSTRUCTION

EPIPHANY EVANGELICAL LUTHERAN CHURCH

156TH STREET AND DITCH ROAD
WESTFIELD, INDIANA

DRAWING
FLOOR PLANS AND DETAILS

ISSUE
TAC Submission - 06/29/12

REVISIONS
1 ---
2 ---
3 ---
4 ---

PROJECT NO.
1209

DATE
06/29/2012

DRAWING NO.
A2.1

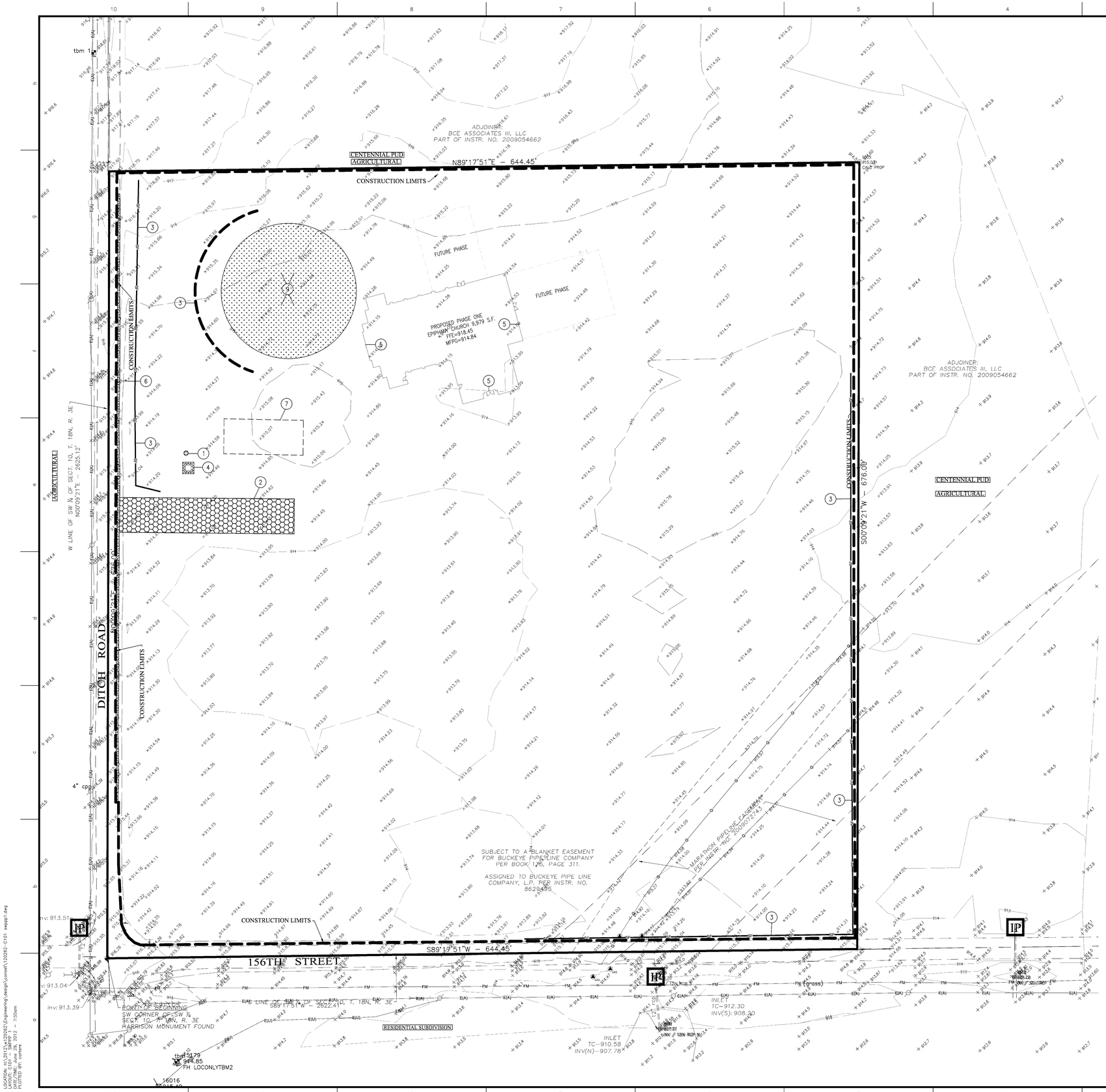

GENERAL NOTES:

1) IT SHALL BE THE RESPONSIBILITY OF THE CONTRACTOR TO VERIFY WITH THE OWNER DURING BIDDING AND DURING CONSTRUCTION ACTIVITIES ALL ITEMS TO BE REMOVED. IT IS THE RESPONSIBILITY OF THE CONTRACTOR TO REMOVE ANY MATERIALS AND/OR STRUCTURES NOT LOCATED ON THIS SURVEY FOR THE INSTALLATION OF THE NEW WORK.

2) IT SHALL BE THE RESPONSIBILITY OF THE CONTRACTOR TO VERIFY ALL EXISTING UTILITIES PERTAINING TO THEIR PHASE OF WORK, AND TO VERIFY WHICH UTILITIES WILL BE REMOVED BY UTILITY COMPANY. ANY AND ALL UTILITIES NOT REMOVED BY THE UTILITY COMPANY SHALL BE REMOVED BY THE CONTRACTOR.

3) UTILITIES ARE SHOWN TO BE APPROXIMATE AND SHALL BE RELOCATED AND/OR CAPPED AND ABANDONED BEFORE CONSTRUCTION AT NO ADDITIONAL COST TO THE OWNER.

4) ALL DEMOLITION MATERIAL AND SALVAGEABLE MATERIAL IS THE PROPERTY OF THE DEMOLITION CONTRACTOR AND SHALL BE PROPERLY DISPOSED OF OFF THE SITE.

5) SLABS ON GRADE MUST BE REMOVED COMPLETELY AND TAKEN OFF THE SITE.

6) ALL UTILITIES MUST REMAIN ACTIVE FOR AREA TENANTS THAT ARE REMAINING. NO UTILITY SERVICE SHALL BE INTERRUPTED DURING THE CONSTRUCTION PROCESS.

7) BEARINGS, DIMENSIONS, AND EASEMENTS ARE SHOWN FOR REFERENCE ONLY. SEE RECORD SURVEYS AND PLATS FOR EXACT INFORMATION.

8) IF THERE ARE ANY QUESTIONS CONCERNING THIS DEMOLITION PLAN, PLEASE CONTACT THE ENGINEER BEFORE CONTINUING WORK.

WEIHE ENGINEERS, INC.
10505 NORTH COLLEGE AVENUE
INDIANAPOLIS, INDIANA 42680
(317) 846–6611 OR
TOLL FREE 1–800–452–6408

HATCH LEGEND
2' MILL EXISTING ASPHALT PAVEMENT

LEGEND

FH	=	EXIST. FIRE HYDRANT
WM	=	EXIST. WATER METER/VALVE
	=	EXIST. SIGN
	=	EXIST. MONITOR WELL
• PKF	=	EXIST. IRON PIN & OR PK (SET/FOUND)
GM	=	EXIST. GAS METER
	=	EXIST. GAS VALVE
	=	EXIST. STORM INLET
	=	EXIST. STORM/SAN./TELE. MANHOLE
EM	=	EXIST. ELECTRIC METER
	=	EXIST. POWER POLE/POWER POLE w/ LIGHT
GAc	=	EXIST. GUY ANCHOR
T.Ped	=	EXIST. TELEPHONE PEDESTAL
AC	=	HVAC UNIT
CO	=	EXIST. CLEANOUT
MB	=	MAILBOX
	=	EXIST. LIGHT
BOL	=	EXIST. BOLLARD
	=	EXIST. SANITARY SEWER LINE
	=	EXIST. STORM SEWER LINE
892	=	EXIST. CONTOURS
	=	CONCRETE END SECTION (C.E.S.)
GP	=	GATE POST
	=	TRANSFORMER
	=	RIGHT-OF-WAY LINE
	=	PROPOSED SANITARY SEWER LINE
	=	PROPOSED STORM SEWER LINE
STM	=	PROPOSED HDPE ROOF DRAIN
	=	PROPOSED PIPE BOLLARD
	=	PROPOSED MANHOLE
892	=	PROPOSED CONTOURS
894.50	=	PROPOSED ELEVATION
	=	DRAINAGE FLOW ARROW
W	=	WATER LINE
G	=	GAS LINE
F.F.E.	=	FINISH FLOOR ELEVATION
TC	=	TOP OF (MANHOLE / INLET) CASTING
INV	=	INVERT (BOTTOM) ELEVATION OF (PIPE)
RCP	=	REINFORCED CONCRETE PIPE
CMP	=	CORRUGATED METAL PIPE
CPP	=	CORRUGATED PLASTIC PIPE
PVC	=	POLYVINYL CHLORIDE PIPE
STR.	=	STRUCTURE
M.E.G.	=	MATCH EXISTING GRADE
SSD	=	SUB-SURFACE DRAINAGE
TOC	=	TOP OF CURB
GUT	=	GUTTER
OUL	=	OVERHEAD UTILITY LINE
T	=	TELEPHONE LINE
TBM	=	TEMPORARY BENCHMARK
E	=	ELECTRIC LINE
	=	CONSTRUCTION LIMITS

SITE PREPARATION / SWPPP PHASE I NOTES:

1. INSTALL PERMIT POSTING AREA. 4" PVC TUBE WITH END CAPS ATTACHED TO PROJECT CONSTRUCTION SIGN TO CONTAIN APPROVED CONSTRUCTION DRAWINGS AND PERMITS FOR INSPECTORS.
2. INSTALL CONSTRUCTION ENTRANCE. REFER TO DETAIL ON SHEET C201
3. INSTALL SILT FENCE. REFER TO DETAIL ON SHEET C201
4. INSTALL CONCRETE WASHOUT. REFER TO DETAIL ON SHEET C201
5. LIMITS OF PROPOSED BUILDING
6. REMOVE EXISTING SIGN(S) AND RELOCATE
7. CONSTRUCTION STAGING AREA

SWPPP 1 LEGEND

- IP – INLET PROTECTION – USE SUBSURFACE INLET PROTECTION WITH OVERFLOW CAPABILITY (DANDY SAC)
- – CONSTRUCTION ENTRANCE
- – STAGING AREA (SEE DETAIL)
- – STOCKPILE AREA (TEMPORARY SEEDING REQUIRED)
- – POSTING AREA – 4" PVC TUBE WITH END CAPS ATTACHED TO PROJECT CONSTRUCTION SIGN TO CONTAIN APPROVED CONSTRUCTION DRAWINGS AND PERMITS FOR INSPECTORS.
- –SF– – SILT FENCE
- – CONCRETE WASHOUT

NOTE:
EROSION CONTROL PLAN (SWPPP1) MUST BE EXECUTED BEFORE ANY CONSTRUCTION COMMENCES.

NOTE:
ADDITIONAL EROSION CONTROL MEASURES MAY BE REQUIRED IN THE FIELD BY THE WPWD INSPECTOR

NOTE:
ALL EROSION CONTROL MATERIAL NEEDS TO BE APPROVED BY THE WPWD INSPECTORS PRIOR TO INSTALLATION

EXISTING AREAS

TOTAL SITE = 10.00 AC.
DISTURBED = 10.00 AC.
PERVIOUS = 10.00 AC.
IMPERVIOUS = 0.00 AC.

SCALE: 1" = 40'
0 20 40 80

811 Know what's below. Call before you dig.
Within Indiana Call 811 or 800-382-5544
24 Hours a Day, 7 Days a Week.
PER INDIANA STATE LAW IC 8-1-26, IT IS AGAINST THE LAW TO EXCAVATE WITHOUT NOTIFYING THE UNDERGROUND LOCATION SERVICE TWO (2) WORKING DAYS BEFORE COMMENCING WORK.

PRELIMINARY CONSTRUCTION PLANS

10505 N. College Avenue
Indianapolis, Indiana 46280
weihe.net
317 | 846 - 6611
800 | 452 - 6408
317 | 843 - 0546 fax
ALLAN H. WEIHE, P.E., L.S. - FOUNDER

WEIHE ENGINEERS
Land Surveying | Civil Engineering
Landscape Architecture

PROJECT NO.	W12.0262
DWG. NAME	120262-C101 swppp1.dwg
DESIGNED BY:	EJC/MG
DRAWN BY:	EJC/MG
CHECKED BY:	JKS
DATE:	06/28/2012

REVISIONS AND ISSUES

BY	DATE

JAMES K. SHINNEMAN REGISTRATION NO. 10200392 STATE OF INDIANA PROFESSIONAL ENGINEER
NOT APPROVED FOR CONSTRUCTION

JAMES K. SHINNEMAN P.E. 10200392

PREPARED FOR:
EPIPHANY EVANGELICAL LUTHERAN CHURCH PHASE ONE

156TH AND DITCH ROAD, WESTFIELD IN

SWPPP (PHASE 1)

Part of the SE Corner of SW1/4 of Section 10, Township 18 North, Range 3 East, Washington Township, Hamilton County, Indiana

SHEET NO.
C101

PROJECT NO.
W12.0262

LOCATION: I:\Projects\2012\W12.0262\Engineering\Design\Xconsult\120262-C101 swppp1.dwg
LAYOUT: C101 - SWPPP 1
DATE/TIME: June 29, 2012 - 7:55am
PLOTTED BY: collere

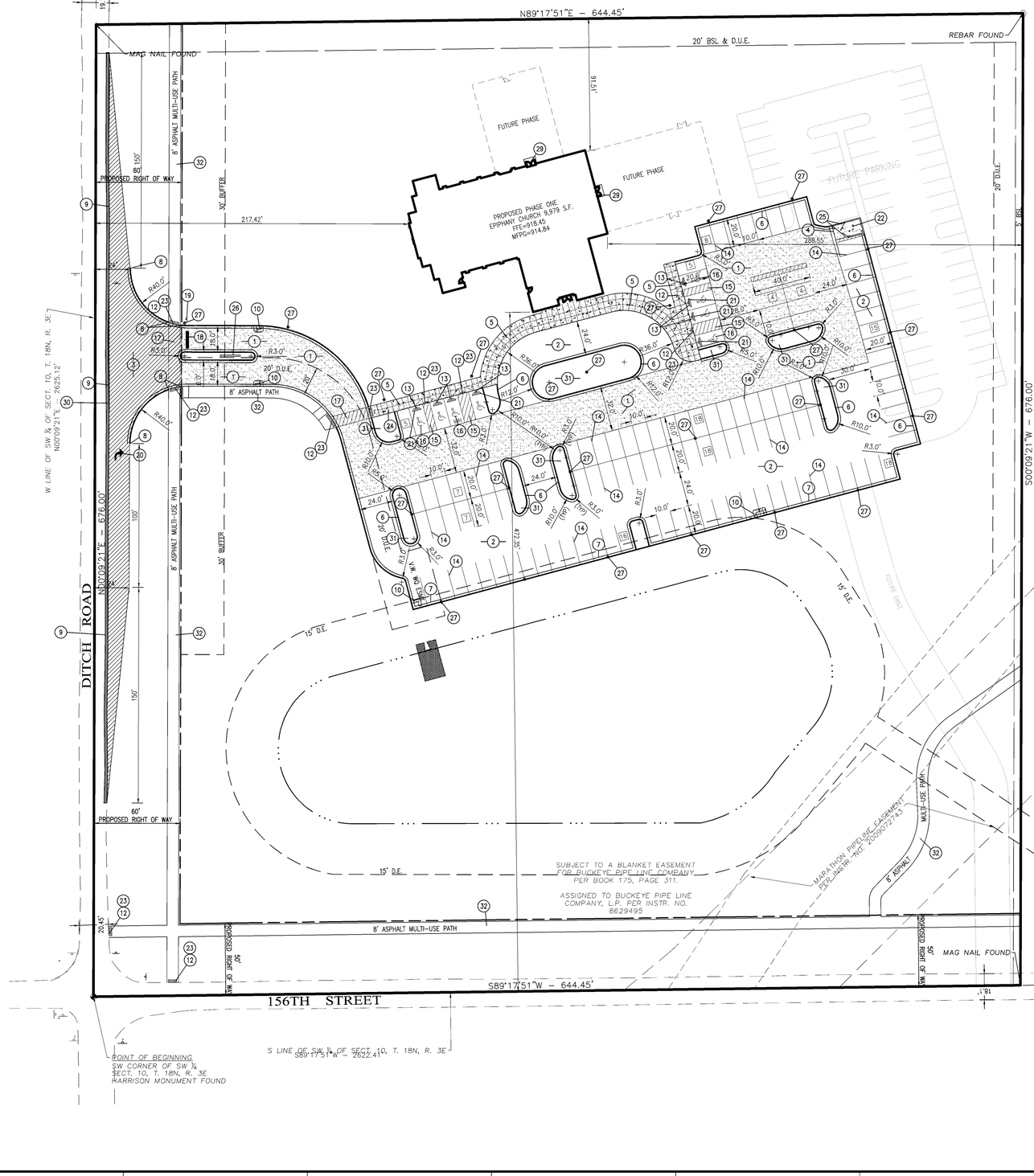

GENERAL NOTES:

1) THE CONTRACTOR SHALL BE RESPONSIBLE FOR OBTAINING, OR VERIFYING THAT ALL PERMITS AND APPROVALS ARE OBTAINED FROM THE RESPECTIVE CITY, COUNTY, AND STATE AGENCIES PRIOR TO STARTING CONSTRUCTION.
2) IT SHALL BE THE CONTRACTORS RESPONSIBILITY TO DETERMINE THE EXACT LOCATION OF ALL EXISTING UTILITIES IN THE VICINITY OF THE CONSTRUCTION AREA PRIOR TO STARTING CONSTRUCTION
3) IT SHALL BE THE CONTRACTORS RESPONSIBILITY TO NOTIFY AND COORDINATE CONSTRUCTION WITH ALL RESPECTIVE UTILITIES.
4) ALL QUANTITIES GIVEN ON THESE PRINTS, VERBALLY OR IN THE SCOPE OF WORK SECTION ARE ESTIMATES AND SHALL BE CONFIRMED BY THE BIDDING CONTRACTORS.
5) OCCUPATIONAL SAFETY AND HEALTH ADMINISTRATION (OSHA) STANDARDS FOR EXCAVATIONS; FINAL RULE 29 CFR PART 1926, SUBPART "P" APPLIES TO ALL EXCAVATIONS EXCEEDING FIVE (5) FEET IN DEPTH.
6) IN ADDITION, EXCAVATION EXCEEDING TWENTY (20) FEET IN DEPTH REQUIRE THE DESIGN OF A TRENCH SAFETY SYSTEM BY A REGISTERED PROFESSIONAL ENGINEER.
7) IT SHALL BE THE RESPONSIBILITY OF THE DEVELOPER AND CONTRACTOR TO MAINTAIN QUALITY CONTROL THROUGHOUT THIS PROJECT.
8) TEMPORARY TRAFFIC CONTROL DURING CONSTRUCTION TO CONFORM TO APPLICABLE LOCAL STANDARDS.
9) BEARINGS, DIMENSIONS, AND EASEMENTS ARE SHOWN FOR REFERENCE ONLY. SEE RECORD SURVEYS AND PLATS FOR EXACT INFORMATION.
10) ANY FIELD TILES ENCOUNTERED DURING EXCAVATION SHALL BE REPAIRED AND POSITIVE DRAINAGE PRESERVED.
11) THE ENGINEER AND/OR OWNER DISCLAIM ANY ROLE IN THE CONSTRUCTION MEANS AND METHODS ASSOCIATED WITH THE PROJECT.
12) THE LOWEST FLOOR ELEVATION RECEIVING GRAVITY SERVICE MUST BE A MINIMUM OF ONE (1) FOOT ABOVE THE TOP OF CASTING OF THE NEAREST SANITARY SEWER MANHOLE, OR A GRINDER PUMP SHALL BE REQUIRED.
13) ALL DIMENSIONS ARE BASED ON FACE OF CURB OR BACK OF ROLL CURB OR FACE OF BUILDING.
14) SEE ARCHITECTURAL PLANS FOR DETAILS OF BUILDING, BUILDING DIMENSIONS, ATM RELATED DETAILS, AND SIGNAGE SPECIFICATIONS. DO NOT STAKE BUILDING FROM THESE PLANS.
15) COORDINATE CONSTRUCTION ACTIVITIES WITH ADJOINING WORK. VERIFY EXTENT OF ADJOINING WORK AND COORDINATE AS REQUIRED.
16) FIELD VERIFY EXISTING CURBS AND TAPER PROPOSED VERTICAL CURBS TO MATCH WITHIN A MIN. OF THREE (3) FEET.
17) ± DIMENSIONS INDICATE FIELD DIMENSION ADJUSTMENT AREA BASED ON ACTUAL FIELD LAYOUT COORDINATES.

PLAN NOTES:

1. HEAVY DUTY ASPHALT PAVING PER DETAIL ON SHEET C202
2. LIGHT DUTY ASPHALT PAVING PER DETAIL ON SHEET C202
3. RIGHT-OF-WAY ASPHALT OR CONCRETE PAVING PER DETAIL ON SHEET C202
4. PROPOSED HEAVY DUTY CONCRETE WITH 1' CHAMFERED CORNERS PER DETAIL ON SHEET C202
5. INTEGRAL WALK AND CURB PER DETAIL ON SHEET C202
6. PROPOSED 6" CURB OR 6" CURB AND GUTTER PER DETAIL ON SHEET C202
7. PROPOSED 8" CURB AND GUTTER PER DETAIL ON SHEET C202
8. TAPER CURB WITHIN 3 FEET
9. MATCH EXISTING PAVEMENT
10. PROPOSED STORM INLET WITH CONCRETE APRON; REFER TO DETAIL ON SHEET C202.
11. PROPOSED TRANSFORMER PAD LOCATION (TBD)
12. ADA ACCESSIBLE RAMP
13. ADA PARKING SIGN (1 VAN ACCESSIBLE REQUIRED)
14. PAINTED WHITE 4" PARKING LINES (TYP)
15. PAINTED BLUE ADA ACCESSIBLE AISLE
16. PAINTED ADA PARKING SYMBOL – (WHITE WITH BLUE BACKGROUND)
17. PAINTED CROSS WALKS
18. 24" PAINTED WHITE STOP BAR
19. STOP SIGN
20. PAINTED WHITE TRAFFIC ARROWS. REFER TO DETAIL THIS SHEET
21. CONCRETE PARKING BARRIER PER DETAIL ON SHEET C202
22. PROPOSED DUMPSTER ENCLOSURE; REFER TO ARCHITECTURAL PLANS FOR DETAILS
23. PAVEMENT FLUSH WITH SIDEWALK
24. PROPOSED SIDEWALK PER DETAIL ON SHEET C202
25. PROPOSED BOLLARD PER DETAIL ON SHEET C202
26. PROPOSED SIGN LOCATION
27. PROPOSED LIGHT POLE AND BASE
28. PROPOSED ROOF DRAIN. COORDINATE WITH ARCHITECTURAL DRAWINGS AND SHEET C103
29. CONCRETE STOOP. REFER TO ARCHITECTURAL DRAWINGS
30. MILL 2' AND RESURFACE PER WESTFIELD DETAILS
31. CONTRACTOR TO PROVIDE 6" MINIMUM APPROVED TOPSOIL BETWEEN BUILDING AND CURB. COORDINATE WITH ARCHITECTURAL DRAWINGS
32. 8" MULTI-USE PATH PER WESTFIELD DETAILS

LEGEND

FH	=	EXIST. FIRE HYDRANT
WM	=	EXIST. WATER METER/VALVE
	=	EXIST. SIGN
	=	EXIST. MONITOR WELL
PKF	=	EXIST. IRON PIN & OR PK (SET/FOUND)
GM GV	=	EXIST. GAS METER
	=	EXIST. GAS VALVE
	=	EXIST. STORM INLET
	=	EXIST. STORM/SAN./TELE. MANHOLE
EM	=	EXIST. ELECTRIC METER
	=	EXIST. POWER POLE/POWER POLE w/ LIGHT
GAc	=	EXIST. GUY ANCHOR
T.Ped	=	EXIST. TELEPHONE PEDESTAL
	=	HVAC UNIT
CO	=	EXIST. CLEANOUT
MB	=	MAILBOX
	=	EXIST. LIGHT
MXL	=	EXIST. BOLLARD
	=	EXIST. SANITARY SEWER LINE
	=	EXIST. STORM SEWER LINE
892	=	EXIST. CONTOURS
	=	CONCRETE END SECTION (C.E.S.)
GP	=	GATE POST
	=	TRANSFORMER
	=	RIGHT-OF-WAY LINE
	=	PROPOSED SANITARY SEWER LINE
	=	PROPOSED STORM SEWER LINE
STM	=	PROPOSED HDPE ROOF DRAIN
	=	PROPOSED PIPE BOLLARD
	=	PROPOSED MANHOLE
892	=	PROPOSED CONTOURS
894.50	=	PROPOSED ELEVATION
	=	DRAINAGE FLOW ARROW
W	=	WATER LINE
G	=	GAS LINE
F.F.E.	=	FINISH FLOOR ELEVATION
TC	=	TOP OF (MANHOLE / INLET) CASTING
INV	=	INVERT (BOTTOM) ELEVATION OF (PIPE)
RCP	=	REINFORCED CONCRETE PIPE
CMP	=	CORRUGATED METAL PIPE
CPP	=	CORRUGATED PLASTIC PIPE
PVC	=	POLYVINYL CHLORIDE PIPE
STR.	=	STRUCTURE
M.E.G.	=	MATCH EXISTING GRADE
SSD	=	SUB-SURFACE DRAINAGE
TOC	=	TOP OF CURB
GUT	=	GUTTER
OHL	=	OVERHEAD UTILITY LINE
T	=	TELEPHONE LINE
TBM	=	TEMPORARY BENCHMARK
E	=	ELECTRIC LINE
	=	CONSTRUCTION LIMITS

-PARKING SUMMARY-

PARKING REQUIREMENT: CHURCH (SF-3)
1 SPACE PER 3 SEATS (~ 370 SEATS)
PARKING REQUIRED = 124 SPACES (PHASE 1)

PARKING PROVIDED:

117 – STANDARD SPACES
8 – HANDICAP SPACES
125 – TOTAL SPACES

SCALE: 1" = 40'
0 20 40 80

Know what's below. Call before you dig.
Within Indiana Call 811 or 800-382-5544
24 Hours a Day, 7 Days a Week.
PER INDIANA STATE LAW IC 8-1-26, IT IS AGAINST THE LAW TO EXCAVATE WITHOUT NOTIFYING THE UNDERGROUND LOCATION SERVICE TWO (2) WORKING DAYS BEFORE COMMENCING WORK.

10505 N. College Avenue
Indianapolis, Indiana 46280
weihe.net
317 | 846 - 6611
800 | 452 - 6408
317 | 843 - 0546 fax
ALLAN H. WEIHE, P.E., L.S. - FOUNDER

WEIHE ENGINEERS
Land Surveying | Civil Engineering
Landscape Architecture

PROJECT NO. W12.0262
DWG. NAME: 120262-C102 site.dwg
DESIGNED BY: EJC/JMG
DRAWN BY: EJC/JMG
CHECKED BY: JKS
DATE: 06/28/2012

REVISIONS AND ISSUES | BY | DATE

PRELIMINARY CONSTRUCTION PLANS

JAMES K. SHINNEMAN
REGISTRATION NO. P.E. 10200392
STATE OF INDIANA
PROFESSIONAL ENGINEER
APPROVED
NOT FOR CONSTRUCTION

JAMES K. SHINNEMAN P.E. 10200392

PREPARED FOR:
EPIPHANY EVANGELICAL LUTHERAN CHURCH PHASE ONE

156TH AND DITCH ROAD, WESTFIELD IN

SITE LAYOUT PLAN

Part of the SE Corner of SW1/4 of Section 10, Township 18 North, Range 3 East, Washington Township, Hamilton County, Indiana

SHEET NO.
C102

PROJECT NO.
W12.0262

LOCATION: H:\2012\W12026X\Engineering\design\consel\120262-C102 site.dwg
LAYOUT: C102 SITE PLAN
DATE/TIME: June 29, 2012 - 7:50am
PLOTTED BY: corbere

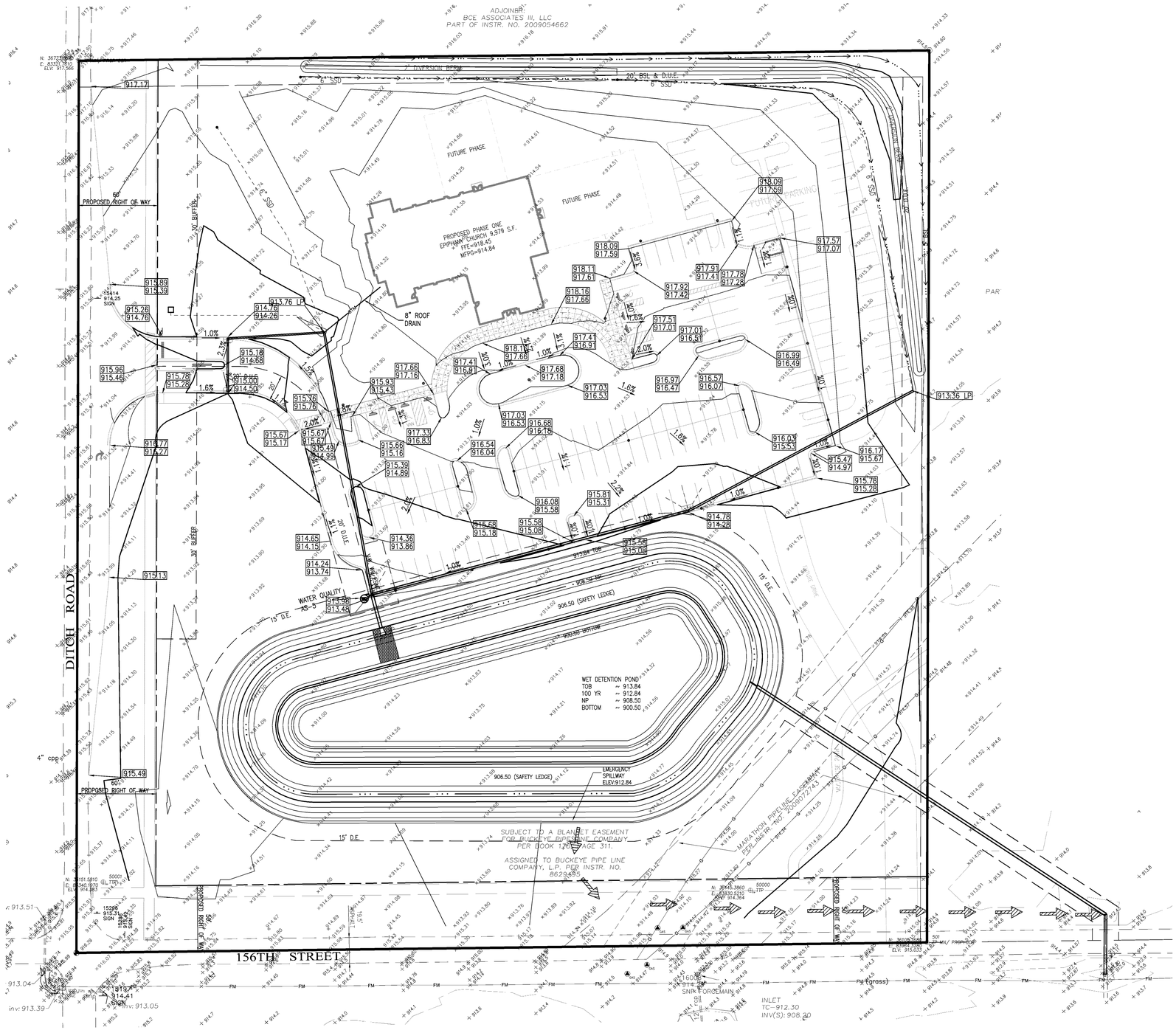

GENERAL GRADING NOTES:

1. REFER TO THE INDIANA DEPARTMENT OF TRANSPORTATION (INDOT) STANDARD SPECIFICATIONS, 1995 EDITION, FOR BASIC MATERIALS AND CONSTRUCTION METHODS. THE SECTIONS BELOW FOR VARIOUS ITEMS ARE TO CLARIFY THE INTENT OF THE REQUIREMENTS FOR THIS PROJECT. PLEASE NOTE THAT OTHER SECTIONS OF THE INDOT STANDARD SPECIFICATIONS MAY ALSO BE APPLICABLE.
2. FILL MATERIAL SHALL CONSIST OF EARTH OBTAINED FROM CUT AREAS, BORROW PITS OR OTHER APPROVED SOURCES. EARTH SHALL BE FREE FROM ORGANIC MATTER AND OTHER DELETERIOUS SUBSTANCES AND LARGE ROCKS. THE FILL MATERIAL SHALL BE PLACED IN LAYERS NOT TO EXCEED SIX INCHES FOLLOWING COMPACTION, PROPER MOISTURE CONTENT OF FILL MATERIAL WILL BE SUCH TO ACHIEVE SPECIFIED COMPACTION DENSITY. ALL FILL BENEATH PAVED AREAS, FLOOR SLABS AND FUTURE BUILDINGS SHALL BE COMPACTED TO AT LEAST 95% OF THE MAXIMUM DRY DENSITY PER ASTM D-1557. FIELD COMPACTING TEST SHALL BE RUN ON EACH LIFT, IN FILL SECTIONS, AND THE REQUIRED COMPACTION ON EACH LIFT SHALL BE IN ACCORDANCE WITH INDOT SECTION 211.
3. MAXIMUM LAWN SLOPE IS 3:1.
4. THE CONTRACTOR SHALL CONTACT ALL UTILITY COMPANIES TO LOCATE MAINS, CONDUITS, SERVICE LINES, ETC. IN THE AFFECTED CONSTRUCTION AREA. EXISTING UTILITY STRUCTURES ARE SHOWN HERE IN ACCORDANCE WITH AVAILABLE INFORMATION. THE LOCATION AND PROTECTION OF UTILITY STRUCTURES, THEIR SUPPORT AND MAINTENANCE DURING CONSTRUCTION (IN COOPERATION WITH APPLICABLE UTILITY COMPANY) IS THE EXPRESSED RESPONSIBILITY OF THE CONTRACTOR.
5. ALL SPOT ELEVATIONS ARE TO FINISHED GRADE.
6. COMPACTED "B" BORROW BACK FILL REQ'D. OVER ALL UTILITIES IN PAVED AREAS.
7. ALL GRADES AT BOUNDARY SHALL MEET EXISTING.
8. ANY PART OF SANITARY OR STORM SEWER TRENCHES RUNNING UNDER OR WITHIN 5' OF PAVEMENT TO BE BACKFILLED WITH GRANULAR MATERIAL.
9. ALL CONSTRUCTION ON THIS SITE TO BE PERFORMED IN COMPLIANCE WITH O.S.H.A. STANDARDS FOR WORKER SAFETY.
10. THE CONTRACTOR SHALL CONFIRM ALL EARTHWORK QUANTITIES PRIOR TO THE START OF CONSTRUCTION. IF AN EXCESS OR SHORTAGE OF EARTH IS ENCOUNTERED, THE CONTRACTOR SHALL CONFIRM WITH THE OWNER AND ENGINEER THE REQUIREMENTS FOR STOCKPILING, REMOVAL OR IMPORTING OF EARTH.
11. PROVIDE POSITIVE DRAINAGE WITHOUT PONDING IN ALL AREAS AFTER INSTALLATION. CONTRACTOR TO TEST FOR AND CORRECT ANY PONDING CONDITIONS.
12. VERTICAL CURVES, WITH A MINIMUM LENGTH OF 50', SHALL BE USED WHERE POSSIBLE BETWEEN VERTICAL CHANGES IN DIRECTION (SLOPE) TO ALLOW FOR POSITIVE DRAINAGE AND SMOOTH TRANSITIONS.
13. 13. CONTRACTOR TO INSTALL CONCRETE CRADLES WHEN THE VERTICAL SEPARATION (AS MEASURED FROM THE EXTERIOR OF THE PIPES) BETWEEN SANITARY SEWER FACILITIES, WATER MAIN, AND STORM SEWERS IS 18" OR LESS.

LEGEND

FH	=	EXIST. FIRE HYDRANT
WM	=	EXIST. WATER METER/VALVE
	=	EXIST. SIGN
	=	EXIST. MONITOR WELL
PKF	=	EXIST. IRON PIN & OR PK (SET/FOUND)
GM	=	EXIST. GAS METER
	=	EXIST. GAS VALVE
	=	EXIST. STORM INLET
	=	EXIST. STORM/SAN./TELE. MANHOLE
EM	=	EXIST. ELECTRIC METER
	=	EXIST. POWER POLE/POWER POLE w/ LIGHT
GA	=	EXIST. GUY ANCHOR
T.Ped	=	EXIST. TELEPHONE PEDESTAL
	=	HVAC UNIT
CO	=	EXIST. CLEANOUT
MB	=	MAILBOX
	=	EXIST. LIGHT
MA	=	EXIST. BOLLARD
	=	EXIST. SANITARY SEWER LINE
	=	EXIST. STORM SEWER LINE
892	=	EXIST. CONTOURS
	=	CONCRETE END SECTION (C.E.S.)
	=	GATE POST
	=	TRANSFORMER
	=	RIGHT-OF-WAY LINE
	=	PROPOSED SANITARY SEWER LINE
	=	PROPOSED STORM SEWER LINE
STM	=	PROPOSED HDPE ROOF DRAIN
	=	PROPOSED PIPE BOLLARD
	=	PROPOSED MANHOLE
892	=	PROPOSED CONTOURS
894.50	=	PROPOSED ELEVATION
	=	DRAINAGE FLOW ARROW
W	=	WATER LINE
G	=	GAS LINE
F.F.E.	=	FINISH FLOOR ELEVATION
TC	=	TOP OF (MANHOLE / INLET) CASTING
INV	=	INVERT (BOTTOM) ELEVATION OF (PIPE)
RCP	=	REINFORCED CONCRETE PIPE
CMP	=	CORRUGATED METAL PIPE
CPP	=	CORRUGATED PLASTIC PIPE
PVC	=	POLYVINYL CHLORIDE PIPE
STR.	=	STRUCTURE
M.E.G.	=	MATCH EXISTING GRADE
SSD	=	SUB-SURFACE DRAINAGE
TOC	=	TOP OF CURB
GUT	=	GUTTER
OUL	=	OVERHEAD UTILITY LINE
T	=	TELEPHONE LINE
TBM	=	TEMPORARY BENCHMARK
E	=	ELECTRIC LINE
	=	CONSTRUCTION LIMITS
	=	EMERGENCY FLOW

EXISTING AREAS

PERVIOUS = 10.00 AC.
IMPERVIOUS = 0.00 AC.

PROPOSED AREAS

PERVIOUS = 7.87 AC.
IMPERVIOUS = 2.13 AC.

POSITIVE DRAINAGE WILL BE MAINTAINED FOR THIS SITE. NO "BIRDBATHS" OF MORE THAN 1/8" IN DEPTH SHALL BE PERMITTED. ANY AREAS THAT HOLD WATER MORE THAN 1/8" DEEP SHALL BE CUT OUT AND CORRECTED TO POSITIVE DRAINAGE AT NO COST TO THE OWNER/ DEVELOPER/ OR ENGINEER.

BENCHMARK DATA:

SITE BENCHMARK–HAM 41.
DNR DISK STAMPED HAM 41 1998 ON THE NORTH SIDE OF 156TH STREET, ¼ MILE WEST OF DITCH ROAD.
ELEV – 917.54 (NAVD88)

TBM – CUT "+" ON NE BONNET BOLT OF FIRE HYDRANT AT THE SE QUADRANT OF 156TH STREET AND DITCH ROAD
ELEV – 917.10

SCALE: 1" = 40'
0 20 40 80

Know what's below. Call before you dig.
Within Indiana Call 811 or 800-382-5544
24 Hours a Day, 7 Days a Week.
PER INDIANA STATE LAW IC 8-1-26, IT IS AGAINST THE LAW TO EXCAVATE WITHOUT NOTIFYING THE UNDERGROUND LOCATION SERVICE TWO (2) WORKING DAYS BEFORE COMMENCING WORK.

10505 N. College Avenue
Indianapolis, Indiana 46280
weihe.net
317 | 846 - 6611
800 | 452 - 6408
317 | 843 - 0546 fax
ALLAN H. WEIHE, P.E., L.S. - FOUNDER

WEIHE ENGINEERS
Land Surveying | Civil Engineering
Landscape Architecture

PRELIMINARY CONSTRUCTION PLANS

REVISIONS AND ISSUES	DATE	BY

DWG. NAME: 120262-C103 grad.dwg
DESIGNED BY: EJC/JKG
DRAWN BY: EJC/JKG
CHECKED BY: JKS
DATE: 06/28/2012

JAMES K. SHINNEMAN, REGISTERED NO. 10200392, STATE OF INDIANA, PROFESSIONAL ENGINEER
APPROVED
NOT FOR CONSTRUCTION
JAMES K. SHINNEMAN P.E. 10200392

PREPARED FOR:
EPIPHANY EVANGELICAL LUTHERAN CHURCH PHASE ONE

156TH AND DITCH ROAD, WESTFIELD IN

GRADING AND DRAINAGE PLAN

Part of the SE Corner of SW1/4 of Section 10, Township 18 North, Range 3 East, Washington Township, Hamilton County, Indiana

SHEET NO.
C103

PROJECT NO.
W12.0262

LOCATION: I:\2012\w12.0262\Engineering\design\xcase\120262-C103 grad.dwg
LAST SAVED: June 29, 2012 - 7:56am
DATE/TIME: June 29, 2012 - 7:56am
PLOTTED BY: Carlene

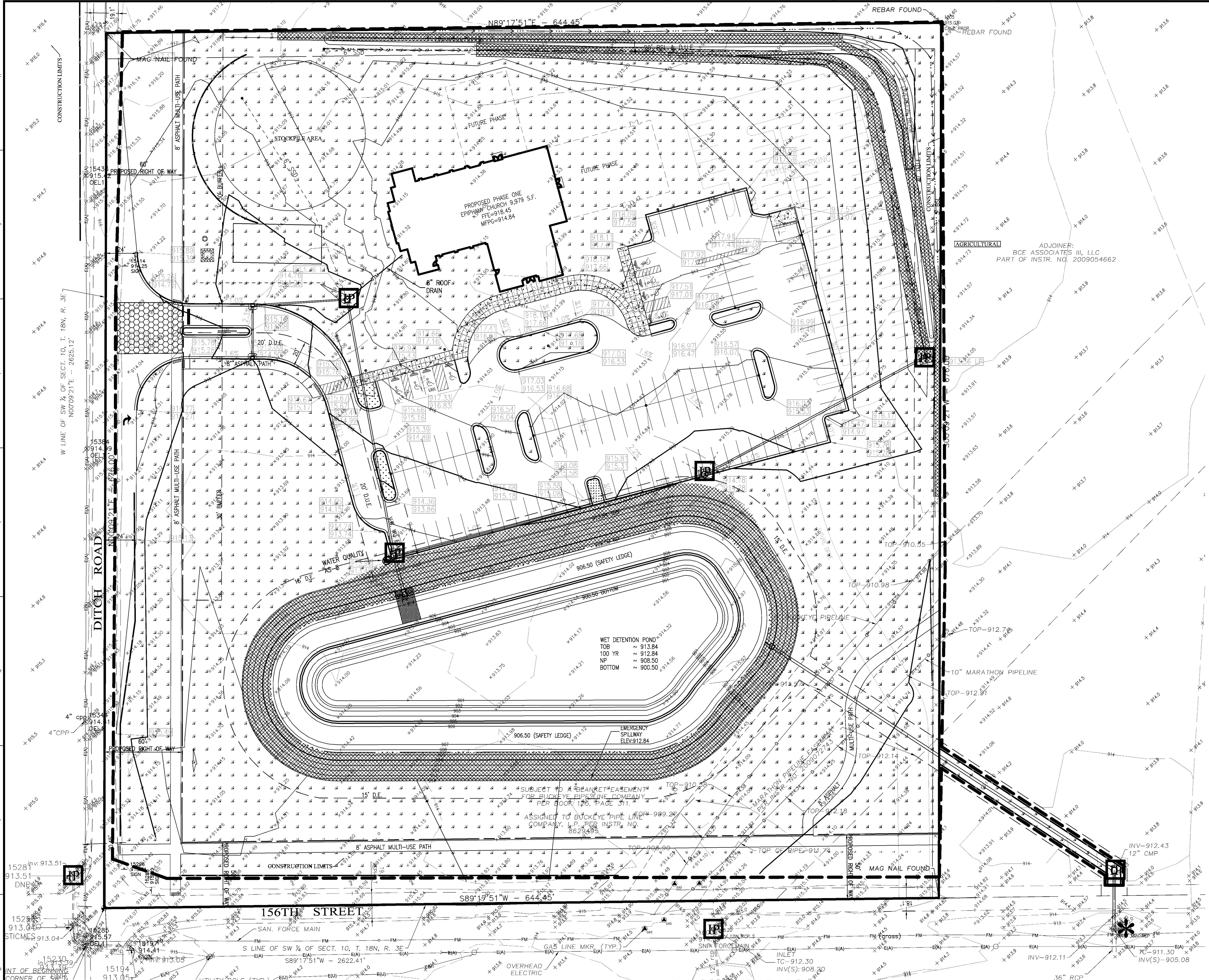

EROSION CONTROL SPECIFICATIONS:

1) THIS PLAN IS DESIGNED AS AN ATTEMPT TO PREVENT ANY AND ALL SEDIMENT FROM LEAVING THE CONSTRUCTION SITE BY WAY OF EROSION. IF EROSION OF SEDIMENT FROM THE SITE IS TAKING PLACE, THE CONTRACTOR AND/OR OWNER SHALL TAKE PREVENTATIVE ACTION IMMEDIATELY. THE ENGINEER SHALL BE CONSULTED IN THE EVENT THIS HAPPENS.
2) TEMPORARY SEEDING IS TO BE APPLIED TO ANY DISTURBED AREA THAT WILL REMAIN UNALTERED IN EXCESS OF 15 DAYS.
3) PERMANENT SEEDING IS TO BE APPLIED IMMEDIATELY TO AREAS THAT HAVE ACHIEVED FINAL AND FINISHED GRADE.
4) PRESERVE EXISTING VEGETATION ON THE SITE WHENEVER AND WHEREVER POSSIBLE TO PREVENT TOPSOIL EROSION.
5) ALL SEDIMENT CAPTURING MEASURES SHALL BE IMPLEMENTED PRIOR TO THE DISTURBANCE OF THE CONSTRUCTION AREA THEY ARE INTENDED TO SERVICE.
ALL EROSION CONTROL MEASURES PROPOSED ARE TO BE PROPERLY MAINTAINED TO CONTINUE THEIR EFFECTIVENESS.
6) IF GRADING OCCURS DURING THE MONTHS OF DECEMBER, JANUARY OR FEBRUARY DORMANT SEEDING PROCEDURES SHALL BE USED.
7) DURING DRY WEATHER, KEEP LAWNS WATERED WITH SPRINKLERS OR OTHER APPROVED METHODS. RESEED ANY AREAS NOT GERMINATING OR DAMAGED AT INTERVALS AS MAY BE REQUIRED ACCORDING TO SEASONAL CONDITION AND/OR CONSTRUCTION ACTIVITY. WATER GRASS AND EXECUTE NECESSARY WEEDING UNTIL FULL STAND OF GRASS HAS BEEN OBTAINED.
8) THE IMPLEMENTATION AND MAINTENANCE OF THE EROSION CONTROL IS THE SOLE RESPONSIBILITY OF THE CONTRACTOR AND/OR OWNER.
9) IT SHALL BE THE CONTRACTOR'S AND/OR OWNER'S RESPONSIBILITY TO MINIMIZE SEDIMENTATION (FROM ON-SITE CONSTRUCTION ACTIVITIES) FROM BEING DEPOSITED ONTO ADJACENT PROPERTIES AND RECEIVING STREAMS/DITCHES IN STRICT COMPLIANCE WITH "RULE 5" (327 IAC 15-5, CONSTRUCTION ACTIVITY STORM WATER RUNOFF CONTROL). IT SHALL ALSO BE THE CONTRACTOR'S AND/OR OWNER'S RESPONSIBILITY TO OBTAIN ANY APPROVALS REQUIRED FROM THE LOCAL AUTHORITY AND TO SUBMIT A COMPLETE NOTICE OF INTENT LETTER TO THE OFFICE OF WATER MANAGEMENT, INDIANA DEPARTMENT OF ENVIRONMENTAL MANAGEMENT PRIOR TO ANY CONSTRUCTION ACTIVITY..
10) FOR SEASONAL VARIATIONS – SEE SEASONAL SOIL PROTECTION CHART IN THESE PLANS.

LAND DESCRIPTION:

Warranty Deed Instrument No. 2012-1063

Part of the Southwest Quarter of Section 10, Township 18 North, Range 3 East, 2nd Principal Meridian, Washington Township, Hamilton County, Indiana, more particularly described as follows:

BEGINNING at the southwest corner of said Southwest Quarter; thence North 00 degrees 09 minutes 21 seconds East along the west line of said Southwest Quarter (basis of bearings is the Indiana State Plane Coordinates East Zone) 676.00 feet; thence North 89 degrees 17 minutes 51 seconds East parallel with the south line of said Southwest Quarter 644.45 feet; thence South 00 degrees 09 minutes 21 seconds West parallel with the west line of said Southwest Quarter 676.00 feet to the south line of said Southwest Quarter; thence South 89 degrees 17 minutes 51 seconds West along said south line 644.45 feet to the POINT OF BEGINNING. Containing 10.000 acres, more or less.

LEGEND

- IP – INLET PROTECTION – USE SUBSURFACE INLET PROTECTION WITH OVERFLOW CAPABILITY
- – PERMANENT SEEDING USE PLANTING CHART
- – EROSION CONTROL BLANKET – USE S150BN BIO-NET AS SUPPLIED BY NORTH AMERICAN GREEN OR APPROVED EQUAL
- – CONSTRUCTION ENTRANCE (8" OF #2 STONE ON NON-WOVEN GEOTEXTILE FABRIC)
- – STAGING AREA (SEE DETAIL)
- – POSTING AREA – 4" PVC TUBE WITH END CAPS ATTACHED TO PROJECT CONSTRUCTION SIGN TO CONTAIN APPROVED CONSTRUCTION DRAWINGS AND PERMITS FOR INSPECTORS.
- –SF– – SILT FENCE
- – CONCRETE WASHOUT
- * – SITE DISCHARGE POINT

SEASONAL SOIL PROTECTION CHART

SOIL STABILIZATION METHOD	JAN. FEB. MAR. APR. MAY JUNE JULY AUG. SEPT. OCT. NOV. DEC.
PERMANENT SEEDING	A——— *////\\////*———*/\\/*→
DORMANT SEEDING	B→ … B→
TEMPORARY SEEDING	C——→ D——→ E——*////\\////*→
SODDING	F**——*/////\\/////*——→
MULCHING	G————→

A = KENTUCKY BLUEGRASS* 40 LBS/ACRE; CREEPING RED FESCUE 40 LBS/ACRE; PLUS 2 TONS STRAW MULCH/ACRE, OR ADD ANNUAL RYEGRASS 20 LBS/ACRE.
B = KENTUCKY BLUEGRASS* 60 LBS/ACRE; CREEPING RED FESCUE 60 LBS/ACRE; PLUS 2 TONS STRAW MULCH/ACRE, OR ADD ANNUAL RYEGRASS 30 LBS/ACRE.
C = SPRING OATS 3 BUSHEL/ACRE.
D = WHEAT OR RYE 2 BUSHEL/ACRE.
E = ANNUAL RYEGRASS 40 LBS/ACRE.
F = SOD (BLEND 3 IMPROVED VARIETIES).
G = STRAW MULCH 2 TONS/ACRE.
/\/ IRRIGATION NEEDED DURING JUNE, JULY, AND/OR SEPTEMBER.
** IRRIGATION NEEDED FOR 2 TO 3 WEEKS AFTER APPLYING SOD.
*KENTUCKY BLUEGRASS BLEND OF 3 IMPROVED VARIETIES.

-NOTE-

THIS PLAN INDICATES EROSION CONTROL MEASURES REQUIRED AFTER SOIL STRIPPING AND PAD BUILDING HAS TAKEN PLACE.

DISTURBED ACREAGE = 10.00± AC.

NOTE:

ALL EROSION CONTROL MATERIAL NEEDS TO BE APPROVED BY THE WPWD INSPECTORS PRIOR TO INSTALLATION

-WARNING-

THIS PLAN TO BE USED FOR EROSION CONTROL PURPOSES ONLY. ADDITIONAL EROSION CONTROL MEASURES MAY BE REQUIRED IN THE FIELD BY THE WPWD INSPECTOR.

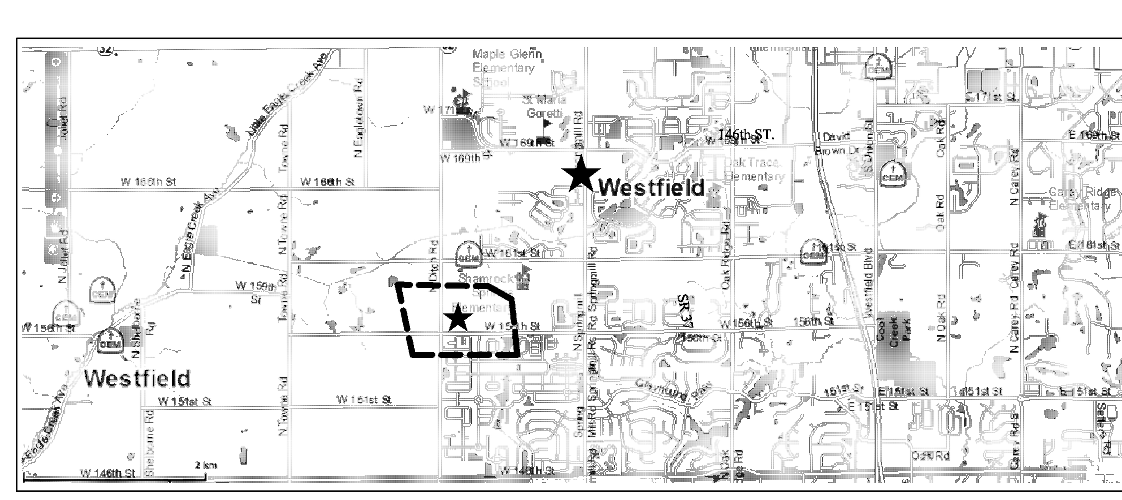

★ PROJECT LOCATION AREA MAP

NO SCALE

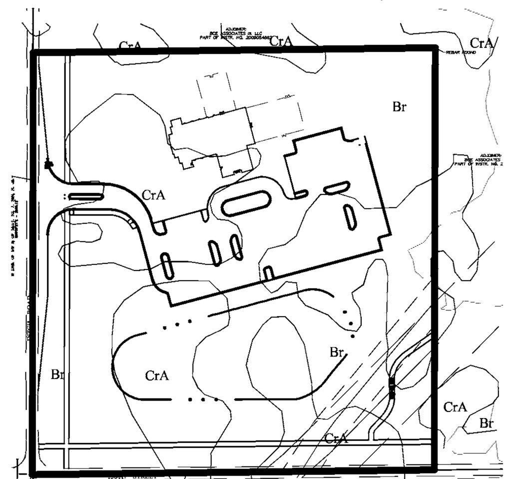

★ PROJECT LOCATION SOILS MAP

SOILS TYPE LEGEND

Br BROOKSTON SILTY CLAY LOAM
THE MAIN SOIL FEATURES THAT ADVERSELY AFFECT ENGINEERING USES OF THIS SOIL ARE A SEASONAL HIGH WATER TABLE, HIGH POTENTIAL FROST ACTION, MODERATE SHRINK-SWELL POTENTIAL, AND MODERATE PERMEABILITY. THIS SOIL HAS SEVERE LIMITATIONS FOR BUILDING SITES. THE SITES NEED TO BE ARTIFICIALLY DRAINED AND PROTECTED FROM FLOODING. DWELLINGS AND SMALL BUILDINGS WITH BASEMENTS SHOULD NOT BE CONSTRUCTED ON THIS SOIL. USING PROPERLY DESIGNED FOUNDATIONS AND FOOTINGS HELPS TO PREVENT STRUCTURAL DAMAGE FROM FROST ACTION AND SHRINKING AND SWELLING OF THE SOIL. THIS SOIL HAS SEVERE LIMITATIONS FOR LOCAL ROADS AND STREETS BECAUSE OF SEASONAL HIGH WATER TABLE AND HIGH POTENTIAL FROST ACTION. INSTALLATION OF DRAINAGE DITCHES ALONG ROADS HELPS TO LOWER THE WATER TABLE AND PREVENT DAMAGE FROM FROST ACTION. THE BASE MATERIAL FOR ROADS AND STREETS SHOULD BE REPLACED OR STRENGTHENED WITH SUITABLE MATERIAL.

CrA CROSBY SILT LOAM
0 TO 2 PERCENT SLOPES. THE MAIN SOIL FEATURES THAT ADVERSELY AFFECT THE ENGINEERING USES OF THIS SOIL ARE A SEASONAL HIGH WATER TABLE, MODERATE SHRINK-SWELL POTENTIAL, HIGH POTENTIAL FROST ACTION, AND SLOW PERMEABILITY. THIS SOIL HAS SOME SEVERE LIMITATIONS FOR BUILDING SITES. THE SITES NEED TO BE ARTIFICIALLY DRAINED TO PREVENT WETNESS FROM BECOMING A PROBLEM. DWELLINGS AND SMALL BUILDINGS WITH BASEMENTS SHOULD NOT BE CONSTRUCTED ON THIS SOIL. USING PROPERLY DRAINED FOUNDATIONS AND FOOTINGS HELPS TO PREVENT STRUCTURAL DAMAGE FROM LOW STRENGTH AND SHRINKING AND SWELLING OF THE SOIL. THIS SOIL HAS SEVER LIMITATIONS FOR LOCAL ROADS AND STREETS. THE BASE MATERIAL FOR ROADS NEEDS TO BE STRENGTHENED OR REPLACED WITH SUITABLE MATERIAL.

EROSION CONTROL NOTES

1. ALL DISTURBED AREAS SHALL BE SODDED OR SEEDED, EXCEPT BUILDING PAD AND LANDSCAPE BEDS. SEE LANDSCAPE PLANS FOR LOCATION OF LANDSCAPE BEDS.

2. INSTALL SILT FENCE ALONG ALL PROPERTY BOUNDARIES ADJACENT TO CONSTRUCTION.

3. THERE SHALL BE NO DIRT, DEBRIS OR STORAGE OF MATERIAL IN THE STREET.

CONTACT PERSON FOR EROSION CONTROL & SEDIMENT PRACTICES

WEIHE ENGINEERS, INC.
10505 N. COLLEGE AVE.
INDIANAPOLIS, IN 46268
TELEPHONE: (317) 846-6611
FAX: (317) 843-0546
EMAIL: SHINNEMANJ@WEIHE.NET
CONTACT PERSON: JAMIE SHINNEMAN

SCALE: 1" = 40'
0 20 40 80

811 Know what's below. Call before you dig.
Within Indiana Call
811 or 800-382-5544
24 Hours a Day, 7 Days a Week.
PER INDIANA STATE LAW IC 8-1-26. IT IS AGAINST THE LAW TO EXCAVATE WITHOUT NOTIFYING THE UNDERGROUND LOCATION SERVICE TWO (2) WORKING DAYS BEFORE COMMENCING WORK.

PRELIMINARY CONSTRUCTION PLANS

10505 N. College Avenue
Indianapolis, Indiana 46280
weihe.net
317 | 846 - 6611
800 | 452 - 6408
317 | 843 - 0546 *fax*
ALLAN H. WEIHE, P.E., L.S. - FOUNDER
WEIHE ENGINEERS
Land Surveying | Civil Engineering
Landscape Architecture

PROJECT NO.: W12.0262
DWG NAME: 120262-C104 eros.dwg
DESIGNED BY: EAC/MG
DRAWN BY: EAC/MG
CHECKED BY: JKS
DATE: 06.29.2012

REVISIONS AND ISSUES | DATE | BY

JAMES K. SHINNEMAN REGISTERED NO. 10200392 STATE OF INDIANA PROFESSIONAL ENGINEER
APPROVAL PENDING NOT FOR CONSTRUCTION
JAMES K. SHINNEMAN P.E. 10200392

PREPARED FOR:
EPIPHANY EVANGELICAL LUTHERAN CHURCH PHASE ONE
156TH AND DITCH ROAD, WESTFIELD IN
SWPPP (PHASE II)
Part of the SE Corner of SW/1/4 of Section 10, Township 18 North, Range 3 East, Washington Township, Hamilton County, Indiana

SHEET NO. C104
PROJECT NO. W12.0262

LOCATION: H:\2012\w120262\Engineering\design\conset\120262-C104 eros.dwg
LAYOUT: C104 - SWPPP 2
DATE/TIME: June 29, 2012 - 7:57am
PLOTTED BY: cartere

SECTION A - CONSTRUCTION PLAN ELEMENTS

A1 PLAN INDEX – SEE BELOW
A2 11"x17" PLAT – (REDUCTION OF EROSION CONTROL PLAN TO BE SUBMITTED WITH FULL SIZE PLAN)
A3 PROJECT NARRATIVE – THIS IS A PROPOSED COMMERCIAL DEVELOPMENT ON APPROXIMATELY 10.0 ACRES. THE CONSTRUCTION SHALL CONSIST OF 1 BUILDING, ASPHALT PARKING, AND 1 ENTRY DRIVES.
A4 VICINITY MAP – SEE LOWER RIGHT OF THIS SHEET C104
A5 LEGAL DESCRIPTION – SEE UPPER RIGHT OF EROSION CONTROL PLAN, LAT: 40°00'55"N LONG: 86°10'52"W
A6 LOCATION OF ALL LOTS AND PROPOSED SITE IMPROVEMENTS – SEE EROSION CONTROL PLAN C104
A7 HYDROLOGIC UNIT CODE (14 DIGIT) – 05120201090060
A8 NOTATION OF ANY STATE OR FEDERAL WATER QUALITY PERMITS – NOT APPLICABLE
A9 SPECIFIC POINTS WHERE STORMWATER DISCHARGE LEAVES SITE – SOUTHEAST CORNER OF PROPERTY, REFER TO SHEET C104.
A10 LOCATION AND NAME OF WETLANDS, LAKES AND WATER COURSES ON AND ADJACENT TO SITE – NOT APPLICABLE
A11 IDENTIFICATION OF ALL RECEIVING WATERS – LOCAL STORM PIPES INTO WILLIAMS CRFEEK AND EVENTUALLY THE WHITE RIVER.
A12 IDENTIFICATION OF POTENTIAL DISCHARGE TO GROUND WATER – WET POND ON SOUTHSIDE OF PARKING LOT.
A13 100 YEAR FLOODPLAINS, FLOODWAYS, AND FLOODWAY FRINGES – NOT APPLICABLE
A14 PRE–CONSTRUCTION AND POST–CONSTRUCTION ESTIMATE OF PEAK DISCHARGE (10 YEAR) – Q10pre = 12.06 cfs Q10post = 4.12 cfs
A15 ADJACENT LANDUSE INCLUDING UPSTREAM WATERSHED – SEE EROSION CONTROL PLAN C101 & C104
A16 CONSTRUCTION LIMITS – SEE EROSION CONTROL PLAN C101 & C104
A17 IDENTIFICATION OF EXISTING VEGETATIVE COVER – GRASS
A18 SOILS MAP W/ SOIL DESCRIPTIONS AND LIMITATIONS – SEE LOWER HALF OF SHEET C104
A19 LOCATIONS, SIZE & DIMENSIONS OF PROPOSED STORMWATER SYSTEMS – SEE EROSION CONTROL PLAN C104
A20 PLANS FOR OFF–SITE CONSTRUCTION ACTIVITIES – NOT APPLICABLE
A21 LOCATIONS OF PROPOSED SOIL STOCKPILES AND/OR BORROW/DISPOSAL AREAS – SEE EROSION CONTROL PLAN C104
A22 EXISTING SITE TOPOGRAPHY – SEE EROSION CONTROL PLAN C101 & C104
A23 PROPOSED FINAL TOPOGRAPHY – SEE EROSION CONTROL PLAN C104

SECTION B - SWPPP - CONSTRUCTION PHASE

B1 DESCRIPTION OF POTENTIAL POLLUTANT SOURCES – POTENTIAL POLLUTANTS FROM CONSTRUCTION ACTIVITY SUCH AS ASPHALT FROM PAVING; CONCRETE FROM CURBING, SIDEWALKS, OIL, GREASE, ANTIFREEZE, GASOLINE AND DIESEL FUEL FROM CONSTRUCTION EQUIPMENT; SOIL EROSION; FERTILIZER AND PESTICIDES FROM LANDSCAPING AND TRASH SHOULD BE PROPERLY ATTENDED TO TO REDUCE THE CONTAMINANTS FROM ENTERING THE STORM SYSTEM. TRASH SHOULD BE CLEANED UP TO REDUCE CLOGGING OF STORM SYSTEMS AND REDUCE POTENTIAL BACTERIA AND/OR OTHER BIOLOGICAL AGENTS FROM ENTERING IN THE STORM SYSTEM.
B2 SEQUENCE DESCRIBING STORMWATER QUALITY MEASURE IMPLEMENTATION RELATIVE TO LAND DISTURBING ACTIVITIES –
1. A PRE–CONSTRUCTION MEETING WITH THE CITY WESTFIELD IS REQUIRED PRIOR TO THE COMMENCEMENT OF ANY EARTHWORK. ADDITIONALLY, IDEM IS REQUIRED TO BE CONTACTED AT LEAST 48 HOURS PRIOR TO CONSTRUCTION.
2. CONSTRUCTION ENTRANCE – STRIP TOPSOIL AND PLACE STONE AT ACCESS POINT.
3. INSTALL SILT FENCING AND ALL OTHER EROSION CONTROL MEASURES PRIOR TO ANY EARTH MOVING.
4. EARTHWORK – STRIP TOPSOIL, BEGIN ROUGH GRADING AND PREPARE BUILDING PAD AND ROUGH GRADE.
5. STORM SEWER – INSTALL STORM SEWER SYSTEM AND CORRESPONDING INLET PROTECTION
6. SANITARY SEWER – INSTALL SANITARY SEWER SYSTEM
7. FINISH GRADING AND PERMANENT EROSION CONTROL – FINISH GRADE AND PERMANENTLY SEED ALL PROPERTY PERIMETER AREAS.
8. UTILITIES – COORDINATE INSTALLATION OF ALL UTILITIES.
9. PAVEMENT – INSTALL STONE, BASE COURSES AND FINISHED GRADES FOR ENTRY DRIVE.
10. CLEANUP – CONTRACTOR SHALL SPOIL ALL EXCESS MATERIALS, REGRADE AND STABILIZE ALL AREAS DISTURBED BY UTILITY INSTALLATIONS AND RESEED.
11. FINAL LANDSCAPING – INSTALL FINAL LANDSCAPING.
B3 CONSTRUCTION ENTRANCE – SEE EROSION CONTROL PLAN C104 AND SEE DETAIL IN LOWER LEFT CORNER OF PLAN
B4 SEDIMENT CONTROL PLAN FOR SHEET FLOW AREAS – SEE EROSION CONTROL PLAN C104
B5 SEDIMENT CONTROL PLAN FOR CONCENTRATED FLOW AREAS – N/A
B6 STORM SEWER INLET PROTECTION MEASURE LOCATIONS AND SPECS – SEE EROSION CONTROL PLAN C104
B7 RUNOFF CONTROL MEASURES – NOT APPLICABLE
B8 STORM WATER OUTLET PROTECTION SPECS – SEE EROSION CONTROL PLAN C104
B9 GRADE STABILIZATION STRUCTURE LOCATIONS AND SPECS – SEE EROSION CONTROL PLAN C104
B10 STORMWATER QUALITY CONSTRUCTION DETAILS – SEE EROSION CONTROL PLAN C104.
B11 TEMPORARY SURFACE STABILIZATION METHOD FOR EACH SEASON – SEE SEASONAL SOIL PROTECTION CHART
B12 PERMANENT SURFACE STABILIZATIONS – SEE SEASONAL SOIL PROTECTION CHART SHEET C104
B13 MATERIAL HANDLING AND SPILL PREVENTION PLAN – POTENTIAL POLLUTANTS FROM CONSTRUCTION ACTIVITY SUCH AS ASPHALT FROM PAVING; CONCRETE FROM CURBING, SIDEWALKS. A CONCRETE WASHOUT AREA HAS BEEN DESIGNATED OIL, GREASE, ANTIFREEZE, GASOLINE AND DIESEL FUEL FROM CONSTRUCTION EQUIPMENT. IF THERE IS A SPILL FROM ONE OF THESE, IMMEDIATE CLEANUP SHOULD OCCUR; SOIL EROSION; FERTILIZER AND PESTICIDES FROM LANDSCAPING AND TRASH SHOULD BE PROPERLY ATTENDED TO TO REDUCE THE CONTAMINANTS FROM ENTERING THE STORM SYSTEM. TRASH SHOULD BE CLEANED UP TO REDUCE CLOGGING OF STORM SYSTEMS AND REDUCE POTENTIAL BACTERIA AND/OR OTHER BIOLOGICAL AGENTS FROM ENTERING IN THE STORM SYSTEM.
SHALL MEET THE REQUIREMENTS OF IAC 2–6.1. FOLLOW MATERIAL SAFETY DATA SHEET (MSDS) GUIDELINES FOR CONTAMINANTS PRESENT ON SITE.
B14 MONITORING AND MAINTENANCE GUIDELINES FOR EACH STORMWATER QUALITY MEASURE – INSPECT ALL EROSION CONTROL AND STORMWATER QUALITY MEASURES WEEKLY AND AFTER EACH STORM EVENT OR HEAVY USE. REPAIR/REPLACE ANY COMPROMISED OR FAILED MEASURE AS REQUIRED. MORE SPECIFIC GUIDELINES ARE INCLUDED ON INDIVIDUAL DETAILS.
B15 EROSION & SEDIMENT CONTROL SPECS – N/A
B17 SEDIMENT CONTROL ASSOCIATED WITH DEWATERING AND DIRECTIONAL BORING OPERATIONS – IN THE EVENT THAT DEWATERING IS REQUIRED ON SITE, PROVIDE SEDIMENT AND OIL CONTAINMENT WITH THE USE OF THE ULTRA DEWATERING BAG, PART #9724–O/S AS PROVIDED BY ULTRATECH INTERNATIONAL, INC. AND SUPPLIED BY D2 LAND & WATER RESOURCES. REFER TO MANUFACTURER SPECIFICATIONS FOR ALTERNATE SIZES OF BAGS IF NEEDED. ALTERNATE EQUAL MEASURES OF CONTAINMENT MAY BE APPROVED BY THE ENGINEER OR EROSION CONTACT PERSON IF ANOTHER PRODUCT OR METHOD OF CONTAINMENT IS DESIRED.

SECTION C - SWPPP - POST-CONSTRUCTION PHASE

C1 DESCRIPTION OF POLLUTANTS AND THEIR SOURCES ASSOCIATED WITH THE PROPOSED LAND USE – POTENTIAL POLLUTANTS FROM POST–CONSTRUCTION ACTIVITY SUCH AS SANDS AND SALTS FROM SNOW REMOVAL; OIL, GREASE, ANTIFREEZE, ETC. FROM VEHICLES INCLUDING HEAVY METAL FROM BRAKE PAD WEAR SHOULD BE PROPERLY ATTENDED TO TO REDUCE THE CONTAMINANTS FROM ENTERING THE STORM SYSTEM. TRASH SHOULD BE CLEANED UP TO REDUCE CLOGGING OF STORM SYSTEMS AND REDUCE POTENTIAL BACTERIA AND/OR OTHER BIOLOGICAL AGENTS FROM ENTERING IN THE STORM SYSTEM. EXCESS FERTILIZERS AND HERBICIDES SHOULD BE AVOIDED. CLEAN UP IMMEDIATELY IF ANY IS SPILLED.
C2 SEQUENCE DESCRIBING STORMWATER QUALITY MEASURE IMPLEMENTATION – WATER QUALITY PROVIDED BY A AQUASWIRL UNIT SHOWN ON THE PLANS AS STORM STRUCTURE WQ1. ADDITIONAL WATER QUALITY MEASURES WILL BE IMPLEMENTED BY THE SITE OWNER AS PART OF THEIR SPILL PREVENTION, CONTROL, AND COUNTERMEASURE PLAN.
C3 DESCRIPTION OF PROPOSED POST–CONSTRUCTION STORMWATER QUALITY MEASURES – AS–5 – PRECAST CONCRETE STORMCEPTOR UNIT – TO BE INSTALLED AS STORM STRUCTURE WQ1 DURING STORM SEWER INSTALLATION. ADDITIONAL WATER QUALITY MEASURES WILL BE IMPLEMENTED BY THE SITE OWNER AS PART OF THEIR SPILL PREVENTION, CONTROL, AND COUNTERMEASURE PLAN.
C4 LOCATION, DIMENSIONS, SPECIFICATIONS, AND CONSTRUCTION DETAILS OF EACH STORM WATER QUALITY MEASURE TO BE INSTALLED AS STORM STRUCTURE DURING STORM SEWER INSTALLATION. ADDITIONAL WATER QUALITY MEASURES WILL BE IMPLEMENTED BY THE SITE OWNER AS PART OF THEIR SPILL PREVENTION, CONTROL, AND COUNTERMEASURE PLAN.
C5 DESCRIPTION OF MAINTENANCE GUIDELINES FOR POST CONSTRUCTION STORMWATER QUALITY MEASURES – MAINTENANCE GUIDELINES FOR THE UNITS ARE INDICATED IN THE O&M MANUAL PROVIDED.

SECTION 1
EMERGENCY RESPONSE NUMBERS

EMERGENCY FOR ANY LIFE THREATENING PROBLEM	911
WESTFIELD FIRE DEPARTMENT	317–804–3333
WESTFIELD POLICE DEPARTMENT	317–804–3200
INDIANA DEPT. OF NATURAL RESOURCES	812–477–8773
INDIANA DEPT. OF ENVIRONMENTAL MANAGEMENT	317–233–7745
HAMILTON COUNTY COUNTY SOIL AND WATER	317–773–1406
DIRECTOR OF COMMUNITY DEVELOPMENT	317–804–3170

SECTION 2
MATERIAL HANDLING AND SPILL PREVENTION PLAN

IN ORDER TO MINIMIZE THE RELEASE OF POTENTIAL POLLUTANTS DURING CONSTRUCTION THE CONTRACTORS SHALL IMPLEMENT THIS MATERIAL HANDLING AND SPILL PREVENTION PLAN. THE CONTRACTOR SHALL REVIEW THIS PLAN WITH ALL SUBCONTRACTORS AND REQUIRE THAT THEY IMPLEMENT THE PLAN AS WELL.

1. CONSTRUCTION EQUIPMENT
A. FUELING, LUBRICATION AND FLUIDS: ALL OPERATIONS INVOLVING THE ADDITION OF FLUIDS TO EQUIPMENT SHOULD BE DONE IN ONE LOCATION, AS DESIGNATED BY THE CONSTRUCTION MANAGER, SO THAT SPILLS ARE LIMITED TO ONE LOCATION ON THE SITE, WHICH WILL FACILITATE THE CLEANUP OF SPILLS. IF AN ONSITE–FUELING TANK IS PLANNED TO BE ON SITE, IT SHALL BE DOUBLE WALLED AND STORED IN THIS DESIGNED AREA. THIS LOCATION IS AN AREA THAT WILL NOT ALLOW SPILLED FLUIDS TO MIGRATE INTO SUBSURFACE SOILS. IN THE EVENT OF A SPILL, THE FLUID SHALL IMMEDIATELY BE CLEANED UP BY REMOVING THE CONTAMINATED SOIL OR STONE, WHICH SHALL BE DISPOSED OF IN AN ACCEPTABLE MANNER. SPILLS ON HARD SURFACES SHALL BE SOAKED UP BY AN ACCEPTABLE MATERIAL SUCH AS OIL DRY AND THE ABSORBENT MATERIAL DISPOSED OF IN A PROPER MANNER. THE SPILL SHALL ALSO BE REPORTED IMMEDIATELY TO THE CONSTRUCTION MANAGER'S SUPERINTENDENT.
B. EQUIPMENT REPAIR, ESPECIALLY WHEN FLUIDS MUST BE REMOVED FROM THE EQUIPMENT OR THE POSSIBILITY OF FLUID SPILLS IS HIGH, SHOULD ALWAYS BE DONE OFFSITE AT A FACILITY THAT IS MORE SUITABLE THAN A CONSTRUCTION SITE TO HANDLE SPILLS. WHEN EQUIPMENT MUST BE REPAIRED ONSITE IT SHOULD BE MOVED TO THE MAINTENANCE AND FUELING AREA IF POSSIBLE. OTHERWISE, SUITABLE ON SITE CONTAINERS SHOULD BE PLACED UNDER THE EQUIPMENT DURING REPAIR TO CATCH ANY SPILLED FLUIDS AND THESE FLUIDS SHOULD BE DISPOSED OF IN A PROPER MANNER.
C. ALL REUSABLE FLUID CONTAINERS, SUCH AS GASOLINE CANS, SHALL BE INSPECTED FOR LEAKS EACH TIME THEY ARE USED. IF LEAKS ARE FOUND, THE FLUID SHALL BE REMOVED FROM THE CONTAINER IN A PROPER MANNER AND THE CONTAINER DISPOSED OF IN AN ACCEPTABLE MANNER. EMPTY DISPOSABLE CONTAINER, SUCH AS GREASE TUBES AND LUBRICATING OIL AND BRAKE FLUID CONTAINERS, AND THEIR PACKAGING, SHALL BE DISPOSED OF IN A PROPER MANNER AND SHALL NOT BE LEFT ON THE GROUND OR IN THE OPEN ON THE CONSTRUCTION SITE.
2. CONSTRUCTION MATERIALS AND THEIR PACKAGING
A. EROSION CONTROL MEASURE SHOWN ON THE SUBJECT PROJECT SHALL BE IMPLEMENTED PRIOR TO AND DURING CONSTRUCTION IN THE PROPER SEQUENCING TO MINIMIZE SOIL EROSION. EROSION CONTROLS SHALL BE INSPECTED AND MAINTAINED AS DESCRIBED ELSEWHERE ON THE PLANS. EXCESSIVE DUSTING OF SOIL ON THE SITE SHALL BE MINIMIZED BY REDUCING CONSTRUCTION TRAFFIC ACROSS BARE SOIL DURING DRY AND/OR WINDY WEATHER, AND BY APPLYING WATER OR OTHER ACCEPTABLE DUST CONTROL MEASURES TO THE SOIL. UPON COMPLETION OF CONSTRUCTION AND SUITABLE ESTABLISHMENT OF PERMANENT VEGETATION, TEMPORARY EROSION CONTROL MEASURES SUCH AS SILT FENCE, CHECK DAMS AND INLET PROTECTION DEVICES SHALL BE REMOVED IN A MANNER TO MINIMIZE ADDITIONAL LAND DISTURBANCE. ANY AREAS DISTURBED BY THESE OPERATIONS SHALL BE PROPERLY REVEGATATED.
B. LARGE WASTE MATERIALS CREATED BY CUTTING, SAWING, DRILLING, OR OTHER OPERATIONS SHALL BE PROPERLY DISPOSED OF IN SUITABLE WASTE CONTAINERS. THE SITE SHALL BE CHECKED AT THE END OF THE DAY, AS A MINIMUM, AND ALL WASTE MATERIALS, INCLUDING THOSE BLOWN ACROSS OR OFF THE SITE BY WIND SHALL BE PICKED UP AND DISPOSED OF IN SUITABLE CONTAINERS. WHERE POSSIBLE, OPERATIONS SUCH AS SAWING THAT CREATE SMALL PARTICLES SHOULD BE PERFORMED IN ONE SPOT IN AN AREA PROTECTED FROM WIND, AND WASTE PARTICLES COLLECTED AND DISPOSED OF FREQUENTLY TO MINIMIZE WIND DISPERSAL. PACKAGING USED TO TRANSPORT MATERIALS TO THE SITE FOR CONSTRUCTION OF THE FACILITY SHALL BE DISPOSED OF PROPERLY, WHETHER THE MATERIAL IS TAKEN OUT OF ITS PACKAGE AND INCORPORATED INTO THE PROJECT IMMEDIATELY OR STORED ONSITE FOR FUTURE USE. PACKAGED MATERIALS STORED ONSITE SHALL BE INSPECTED REGULARLY AND ANY LOOSE PACKAGING SHALL BE REPAIRED OR DISPOSED OF PROPERLY.
C. ALL DEWATERING OF ACTIVITIES SHALL BE DONE IN ACCORDANCE TO GOOD EROSION CONTROL PRACTICES. THESE PRACTICES SHOULD INCLUDE THE USE OF DIRT BAGS SUCH AS SILT FENCE INLET PROTECTION. THE USE OF THESE TYPES OF DEWATERING DEVICES WILL REMOVE LARGE QUANTITIES OF SILT, SEDIMENT, AND DIRT AND PREVENT THESE MATERIALS TO ENTER THE STORM SEWER SYSTEM.
D. IF THE USE OF LIME IS USED TO STABILIZE THE SOIL OF THE SITE THEN ALL CONSTRUCTION EQUIPMENT USED SHALL BE CLEANED OF ALL EXCESS MATERIAL WITH WATER IN THE MAINTENANCE AND REFUELING AREA AS SHOWN WITHIN THESE PLANS.
E. NUTRIENTS AND FERTILIZERS SHALL ONLY BE USED TO ESTABLISH RAPID VEGETATION. WHEN THESE PRODUCTS ARE UTILIZED, THE USER SHOULD PAY STRICT ATTENTION TO THE PRODUCTS RECOMMENDED USAGE.
3. CONCRETE WASTE WATER
A. ALL CONCRETE WASTEWATER SHALL BE DISPOSED OF IN THE DESIGNED AREA AS DIRECTED BY THE CONSTRUCTION MANAGER. THIS AREA IS TO BE A 3' DEEP, 10' SQUARE PIT AS DETAILED ON THE EROSION CONTROL PLAN. THIS AREA SHALL BE INSPECTED ON A DAILY BASIS AT A MINIMUM. WHEN THIS AREA BECOMES FULL, THE POLLUTANTS SHALL BE EXCAVATED, PLACED IN AN ACCEPTABLE CONTAINER AND DISPOSED OF IN PROPER MANNER, BY THE EXCAVATION CONTRACTOR.
4. PAINT PRODUCTS
A. ALL EXCESS PAINT AND THEIR RELATED PRODUCTS SHALL BE DISPOSED OF IN THE MANNER AT WHICH THE MANUFACTURER SUGGESTS. UNDER NO CIRCUMSTANCES WILL PAINT OR THEIR RELATED PRODUCTS BE CLEANED OR DISPOSED OF IN SOIL, SANITARY SEWERS, STORM SEWERS OR DETENTION BASINS. ANY VIOLATION OF THIS SHALL BE REPORTED TO THE JOB SUPERINTENDENT.
IN THE EVENT OF ACCIDENTALLY CONTAMINATION ALL EFFORTS SHOULD BE MADE TO REMOVE CONTAMINANTS IN AN APPROPRIATE MANNER. THE CITY OF WESTFIELD SHOULD BE CONTACTED IMMEDIATELY TO DETERMINE IF FURTHER MEASURES ARE NEEDED.

RULE 6. SPILLS OF OIL AND OTHER OBJECTIONABLE SUBSTANCES; REPORTING, CONTAINMENT AND CLEANUP

(REPEALED BY WATER POLLUTION CONTROL BOARD; FILED FEB 25, 1997, 1:00 P.M.: 20 IR 1734)

RULE 6.1. SPILLS; REPORTING, CONTAINMENT, AND RESPONSE

327 IAC 2-6.1-1 APPLICABILITY

AUTHORITY: IC 13–14–8–7
AFFECTED: IC 13–11–2; IC 13–18–1; IC 13–18–3; IC 13–18–8; IC 13–18–17
SEC. 1. THIS RULE APPLIES TO THE REPORTING AND CONTAINMENT OF, AND THE RESPONSE TO THOSE SPILLS OF HAZARDOUS SUBSTANCES, EXTREMELY HAZARDOUS SUBSTANCES, PETROLEUM, AND OBJECTIONABLE SUBSTANCES THAT ARE OF A QUANTITY, TYPE, DURATION AND IN A LOCATION AS TO DAMAGE THE WATERS OF THE STATE. NOTHING IN THIS RULE IS INTENDED TO AFFECT REPORTING OR CLEAN–UP REQUIREMENTS SET FORTH BY OTHER FEDERAL, STATE, OR LOCAL LAWS. (WATER POLLUTION CONTROL BOARD; 327 IAC 2–6.1–1; FILED FEB 25, 1997, 1:00 P.M.: 20 IR 1731; READOPTED FILED JAN 10, 2001, 3:23 P.M.: 24 IR 1518; READOPTED FILED NOV 21, 2007, 1:16 P.M.: 20071219–IR–327070553BFA)

327 IAC 2-6.1-2 SPECIAL AREAS

AUTHORITY: IC 13–14–8–7
AFFECTED: IC 13–11–2; IC 13–18–1; IC 13–18–3; IC 13–18–8; IC 13–18–17
SEC. 2. CERTAIN AREAS OF THE STATE ARE RECOGNIZED AS HAVING UNIQUE GEOLOGY. A LARGE SECTION OF THE MID–SOUTHERN PART OF THE STATE IS A KARST REGION. PORTIONS OF SAINT JOSEPH, ELKHART, KOSCIUSKO, AND LAGRANGE COUNTIES CONTAIN A SOLE SOURCE AQUIFER AS REFERENCED IN 42 U.S.C. 300H–3(E). THE WATERS OF THE STATE ARE PARTICULARLY VULNERABLE TO DAMAGE FROM SPILLS IN THESE AREAS, AND CARE SHOULD BE EXERCISED WHEN EVALUATING DAMAGE FROM SPILLS. INFORMATION ABOUT THESE AREAS CAN BE OBTAINED BY CALLING THE DEPARTMENT OF ENVIRONMENTAL MANAGEMENT, OFFICE OF LAND QUALITY, EMERGENCY RESPONSE SECTION: AREA CODE 1–888–233–7745 FOR IN–STATE CALLS (TOLL FREE), (317) 233–7745 FOR OUT–OF–STATE CALLS. (WATER POLLUTION CONTROL BOARD; 327 IAC 2–6.1–2; FILED FEB 25, 1997, 1:00 P.M.: 20 IR 1731; READOPTED FILED JAN 10, 2001, 3:23 P.M.: 24 IR 1518; READOPTED FILED NOV 21, 2007, 1:16 P.M.: 20071219–IR–327070553BFA; ERRATA FILED MAY 27, 2008, 2:06 P.M.: 20080625–IR–327080419ACA)

327 IAC 2-6.1-3 EXCLUSIONS

AUTHORITY: IC 13–14–8–7
AFFECTED: IC 13–11–2; IC 13–18–1; IC 13–18–3; IC 13–18–8; IC 13–18–17
SEC. 3. NOTWITHSTANDING ANY OTHER SECTION OF THIS RULE, THE REPORTING REQUIREMENT OF THIS RULE DOES NOT APPLY TO THE FOLLOWING OCCURRENCES:
(1) DISCHARGES OR EXCEEDANCES THAT ARE UNDER THE JURISDICTION OF AN APPLICABLE PERMIT WHEN THE SUBSTANCE IN QUESTION IS COVERED BY THE PERMIT AND DEATH OR ACUTE INJURY OR ILLNESS TO ANIMALS OR HUMANS DOES NOT OCCUR.
(2) LAWFUL APPLICATION OF MATERIALS, INCLUDING, BUT NOT LIMITED TO:
(A) COMMERCIAL OR NATURAL FERTILIZERS AND PESTICIDES ON OR TO LAND OR WATER; OR
(B) DUST SUPPRESSION MATERIALS.
(3) THE APPLICATION OF PETROLEUM NECESSARY FOR CONSTRUCTION THAT DOES NOT DAMAGE WATERS OF THE STATE.
(4) SPILLS OF LESS THAN ONE (1) POUND OR ONE (1) PINT.
(5) SPILLS OF INTEGRAL OPERATING FLUIDS, IN THE USE OF MOTOR VEHICLES OR OTHER EQUIPMENT, THE TOTAL VOLUME OF WHICH IS LESS THAN OR EQUAL TO FIFTY–FIVE (55) GALLONS AND WHICH DO NOT DAMAGE WATERS OF THE STATE.
(6) OIL SHEENS PRODUCED AS A RESULT OF THE NORMAL OPERATION OF PROPERLY FUNCTIONING WATERCRAFT.
(7) A RELEASE OF A SUBSTANCE INTEGRAL TO A SPILL RESPONSE ACTIVITY THAT HAS BEEN APPROVED AND AUTHORIZED BY A STATE OR FEDERAL ONSCENE COORDINATOR. (WATER POLLUTION CONTROL BOARD; 327 IAC 2–6.1–3; FILED FEB 25, 1997, 1:00 P.M.: 20 IR 1731; ERRATA FILED MAR 7, 1997, 2:25 P.M.: 20 IR 1738; READOPTED FILED JAN 10, 2001, 3:23 P.M.: 24 IR 1518; READOPTED FILED NOV 21, 2007, 1:16 P.M.: 20071219–IR–327070553BFA)

327 IAC 2-6.1-4 DEFINITIONS

AUTHORITY: IC 13–14–8–7
AFFECTED: IC 13–11–2; IC 13–18–1; IC 13–18–3; IC 13–18–8; IC 13–18–17; IC 14–8–2–7; IC 14–25–7–13; IC 14–25–7–15
SEC. 4. IN ADDITION TO THE DEFINITIONS CONTAINED IN IC 13–11–2–17(D), IC 13–11–2–35(A), IC 13–11–2–51, IC 13–11–2–158(A), IC 13–11–2–160, IC 13–11–2–260, IC 13–11–2–265, AND IN 327 IAC 1, THE FOLLOWING DEFINITIONS APPLY THROUGHOUT THIS RULE:
(1) "ANIMAL" MEANS ALL MAMMALS, BIRDS, REPTILES, AMPHIBIANS, FISH, CRUSTACEANS, AND MOLLUSKS.
(2) "AQUATIC LIFE" MEANS THOSE PLANTS AND MACROINVERTEBRATES THAT ARE DEPENDENT UPON AN AQUATIC ENVIRONMENT.
(3) "CONTAIN" MEANS TO TAKE SUCH IMMEDIATE ACTION AS NECESSARY TO DAM, BLOCK, RESTRAIN, OR OTHERWISE ACT TO MOST EFFECTIVELY PREVENT A SPILL FROM ENTERING WATERS OF THE STATE OR MINIMIZE DAMAGE TO THE WATERS OF THE STATE FROM A SPILL.
(4) "DAMAGE" MEANS THE ACTUAL OR IMMINENT ALTERATION OF THE WATERS OF THE STATE SO AS TO RENDER THE WATERS HARMFUL, DETRIMENTAL, OR INJURIOUS TO:
(A) PUBLIC HEALTH, SAFETY, OR WELFARE;
(B) DOMESTIC, COMMERCIAL, INDUSTRIAL, AGRICULTURAL, OR RECREATIONAL USES; OR
(C) ANIMALS OR AQUATIC LIFE.
(5) "DOWNSTREAM WATER USER" MEANS:
(A) A COMMUNITY PUBLIC WATER SUPPLY, AS IDENTIFIED BY THE DEPARTMENT OF NATURAL RESOURCES UNDER IC 14–25–7–13(D);
(B) A SIGNIFICANT WATER WITHDRAWAL FACILITY AS REGISTERED WITH THE DEPARTMENT OF NATURAL RESOURCES UNDER IC 14–25–7–15;
(C) USERS OF RECREATIONAL WATERS; OR
(D) ANY OTHER USER MADE KNOWN TO THE PERSON WHO HAS A SPILL.
(6) "EXTREMELY HAZARDOUS SUBSTANCE" MEANS A SUBSTANCE IDENTIFIED PURSUANT TO 42 U.S.C. 11002 AND 11004. (40 CFR 355 APPENDIX A.)
(7) "FACILITY" MEANS ALL LAND, BUILDINGS, EQUIPMENT, STRUCTURES, AND OTHER STATIONARY ITEMS THAT ARE LOCATED ON A SINGLE SITE OR ON CONTIGUOUS SITES AND THAT ARE OWNED OR OPERATED BY THE SAME PERSON OR BY ANY PERSON WHO CONTROLS, IS CONTROLLED BY, OR IS UNDER COMMON CONTROL WITH, SUCH PERSON.
(8) "FACILITY BOUNDARY" MEANS THE BOUNDARY OF A FACILITY OR AN EASEMENT OR RIGHT–OF–WAY.
(9) "HAZARDOUS SUBSTANCE" HAS THE MEANING SET FORTH IN 42 U.S.C. 9601(14).
(10) "MODE OF TRANSPORTATION" INCLUDES, BUT IS NOT LIMITED TO, CARRIAGE BY:
(A) RAIL AND MOTOR VEHICLES;
(B) AIRCRAFT;
(C) WATERCRAFT;
(D) PIPELINES; OR
(E) OTHER MEANS OF TRANSPORTATION;
IN COMMERCE. THIS DEFINITION EXCLUDES CARRIAGE WITHIN A FACILITY BY TRANSPORTATION EQUIPMENT OWNED, OPERATED, OR CONTROLLED BY THAT FACILITY.
(11) "OBJECTIONABLE SUBSTANCES" MEANS SUBSTANCES THAT ARE:
(A) OF A QUANTITY AND A TYPE; AND
(B) PRESENT FOR A DURATION AND IN A LOCATION;
SO AS TO DAMAGE WATERS OF THE STATE. THIS DEFINITION EXCLUDES HAZARDOUS SUBSTANCES, EXTREMELY HAZARDOUS SUBSTANCES, PETROLEUM, AND MIXTURES THEREOF.
(12) "ON–SCENE COORDINATOR" MEANS A STATE OR FEDERAL OFFICIAL DESIGNATED BY THE DEPARTMENT, THE UNITED STATES ENVIRONMENTAL PROTECTION AGENCY, OR THE UNITED STATES COAST GUARD TO DIRECT AND COORDINATE SPECIAL SPILL RESPONSE ACTIVITIES.
(13) "RECREATIONAL WATERS" MEANS ANY WATER USED FOR:
(A) BOATING, SWIMMING, FISHING, HUNTING, TRAPPING, OR WILDLIFE VIEWING; OR
(B) PUBLIC ACCESS AREAS THAT ARE OWNED BY THE DEPARTMENT OF NATURAL RESOURCES OR THE FEDERAL GOVERNMENT; AS LISTED BY THE DEPARTMENT.
(14) "REPORTABLE QUANTITY" MEANS THE AMOUNT OF A HAZARDOUS SUBSTANCE OR EXTREMELY HAZARDOUS SUBSTANCE THAT IS REQUIRED TO BE REPORTED UNDER FEDERAL LAW UNDER 42 U.S.C. 9602(A) AND (B) AND 42 U.S.C. 9603(A). (40 CFR 302.4 OR 40 CFR 355 APPENDIX A.) (15) "SPILL" MEANS ANY UNEXPECTED, UNINTENDED, ABNORMAL, OR UNAPPROVED DUMPING, LEAKAGE, DRAINAGE, SEEPAGE, DISCHARGE OR OTHER LOSS OF PETROLEUM, HAZARDOUS SUBSTANCES, EXTREMELY HAZARDOUS SUBSTANCES, OR OBJECTIONABLE SUBSTANCES. THE TERM DOES NOT INCLUDE RELEASES TO IMPERMEABLE SURFACES WHEN THE SUBSTANCE DOES NOT MIGRATE OFF THE SURFACE OR PENETRATE THE SURFACE AND ENTER THE SOIL.
(16) "SPILL RESPONSE", FOR PURPOSES OF THIS RULE, MEANS THE FOLLOWING:
(A) THE SPILL IS CONTAINED; AND
(B) FREE MATERIAL IS REMOVED OR NEUTRALIZED.
(17) "SPILL REPORT" MEANS AN ORAL REPORT THAT INCLUDES THE FOLLOWING INFORMATION ABOUT A SPILL, TO THE EXTENT THAT THE INFORMATION IS KNOWN AT THE TIME OF THE REPORT:
(A) THE NAME, ADDRESS, AND TELEPHONE NUMBER OF THE PERSON MAKING THE SPILL REPORT.
(B) THE NAME, ADDRESS, AND TELEPHONE NUMBER OF A CONTACT PERSON IF DIFFERENT FROM CLAUSE (A).
(C) THE LOCATION OF THE SPILL.
(D) THE TIME OF THE SPILL.
(E) THE IDENTIFICATION OF THE SUBSTANCE SPILLED.
(F) THE APPROXIMATE QUANTITY OF THE SUBSTANCE THAT HAS BEEN OR MAY FURTHER BE SPILLED.
(G) THE DURATION OF THE SPILL.
(H) THE SOURCE OF THE SPILL.
(I) NAME AND LOCATION OF THE WATERS DAMAGED.
(J) THE IDENTITY OF ANY RESPONSE ORGANIZATION RESPONDING TO THE SPILL.
(K) WHAT MEASURES HAVE BEEN OR WILL BE UNDERTAKEN TO PERFORM A SPILL RESPONSE.
(L) ANY OTHER INFORMATION THAT MAY BE SIGNIFICANT TO THE RESPONSE ACTION.
(18) "WATERS", AS DEFINED IN IC 13–11–2–265, MEANS THE ACCUMULATIONS OF WATER, SURFACE AND UNDERGROUND, NATURAL AND ARTIFICIAL, PUBLIC AND PRIVATE, OR PARTS THEREOF, THAT ARE WHOLLY OR PARTIALLY WITHIN, FLOW THROUGH, OR BORDER UPON THIS STATE. THE TERM DOES NOT INCLUDE ANY PRIVATE POND OR ANY OFF–STREAM POND, RESERVOIR, OR FACILITY BUILT FOR REDUCTION OR CONTROL OF POLLUTION OR COOLING OF WATER PRIOR TO DISCHARGE UNLESS THE DISCHARGE FROM THE POND, RESERVOIR, OR FACILITY CAUSES OR THREATENS TO CAUSE WATER POLLUTION. (WATER POLLUTION CONTROL BOARD; 327 IAC 2–6.1–4; FILED FEB 25, 1997, 1:00 P.M.: 20 IR 1731; ERRATA FILED MAR 7, 1997, 2:25 P.M.: 20 IR 1738; READOPTED FILED JAN 10, 2001, 3:23 P.M.: 24 IR 1518; READOPTED FILED NOV 21, 2007, 1:16 P.M.: 20071219–IR–327070553BFA)

327 IAC 2-6.1-5 REPORTABLE SPILLS; FACILITY

AUTHORITY: IC 13–14–8–7
AFFECTED: IC 13–11–2; IC 13–18–1; IC 13–18–3; IC 13–18–8; IC 13–18–17
SEC. 5. THE FOLLOWING SPILLS FROM A FACILITY MUST BE REPORTED:
(1) SPILLS THAT DAMAGE THE WATERS OF THE STATE SO AS TO CAUSE DEATH OR ACUTE INJURY OR ILLNESS TO HUMANS OR ANIMALS.
(2) SPILLS FROM A FACILITY THAT HAS BEEN NOTIFIED IN WRITING BY A WATER UTILITY THAT IT IS LOCATED IN A DELINEATED PUBLIC WATER SUPPLY WELLHEAD PROTECTION AREA AS APPROVED BY THE DEPARTMENT UNDER 327 IAC 8–4.1 THAT ARE:
(A) SPILLS OF HAZARDOUS SUBSTANCES OR EXTREMELY HAZARDOUS SUBSTANCES WHEN THE AMOUNT SPILLED EXCEEDS ONE HUNDRED (100) POUNDS OR THE REPORTABLE QUANTITY, WHICHEVER IS LESS;
(B) SPILLS OF PETROLEUM WHEN THE AMOUNT SPILLED EXCEEDS FIFTY–FIVE (55) GALLONS; OR
(C) SPILLS OF OBJECTIONABLE SUBSTANCES AS DEFINED IN SECTION 4(11) OF THIS RULE.
(3) SPILLS THAT DAMAGE WATERS OF THE STATE AND THAT:
(A) ARE LOCATED WITHIN FIFTY (50) FEET OF A KNOWN PRIVATE DRINKING WATER WELL LOCATED BEYOND THE FACILITY PROPERTY BOUNDARY; OR
(B) ARE LOCATED WITHIN ONE HUNDRED (100) YARDS OF:
(I) ANY HIGH QUALITY WATER DESIGNATED AS AN OUTSTANDING STATE RESOURCE PURSUANT TO 327 IAC 2–1–2(3), EXCLUDING LAKE MICHIGAN;
(II) ANY WATER DESIGNATED AS EXCEPTIONAL USE PURSUANT TO 327 IAC 2–13(A)(6) [SIC., 327 IAC 2–1–3(A)(6)] AND 327 IAC 2–1–11(B);
(III) ANY WATER DESIGNATED AS CAPABLE OF SUPPORTING A SALMONID FISHERY PURSUANT TO 327 IAC 2–1–6(C)(1), EXCEPT LAKE MICHIGAN; OR
(IV) ANY WATER THAT IS A FISH HATCHERY, FISH AND WILDLIFE AREA, NATURE PRESERVE, OR RECREATIONAL WATER OWNED BY THE DEPARTMENT OF NATURAL RESOURCES OR THE FEDERAL GOVERNMENT.
(4) FOR ANY SPILL WHICH DOES NOT MEET THE CRITERIA IN SUBDIVISIONS (1) THROUGH (3), THE FOLLOWING MUST BE REPORTED:
(A) SPILLS TO SURFACE WATERS:
(I) SPILLS OF HAZARDOUS SUBSTANCES OR EXTREMELY HAZARDOUS SUBSTANCES WHEN THE AMOUNT SPILLED EXCEEDS ONE HUNDRED (100) POUNDS OR THE REPORTABLE QUANTITY, WHICHEVER IS LESS;
(II) SPILLS OF PETROLEUM OF SUCH QUANTITY AS TO CAUSE A SHEEN UPON THE WATERS; OR
(III) SPILLS OF OBJECTIONABLE SUBSTANCES AS DEFINED IN SECTION 4(11) OF THIS RULE.
(B) SPILLS TO SOIL BEYOND THE FACILITY BOUNDARY:
(I) SPILLS OF HAZARDOUS SUBSTANCES OR EXTREMELY HAZARDOUS SUBSTANCES WHEN THE AMOUNT SPILLED EXCEEDS ONE HUNDRED (100) POUNDS OR THE REPORTABLE QUANTITY, WHICHEVER IS LESS;
(II) SPILLS OF PETROLEUM WHEN THE AMOUNT SPILLED EXCEEDS FIFTY–FIVE (55) GALLONS; OR
(III) SPILLS OF OBJECTIONABLE SUBSTANCES AS DEFINED IN SECTION 4(11) OF THIS RULE.
(C) SPILLS TO SOIL WITHIN THE FACILITY BOUNDARY:
(I) SPILLS OF HAZARDOUS SUBSTANCES OR EXTREMELY HAZARDOUS SUBSTANCES WHEN THE AMOUNT SPILLED EXCEEDS THE REPORTABLE QUANTITY;
(II) SPILLS OF PETROLEUM WHEN THE SPILLED AMOUNT EXCEEDS ONE THOUSAND (1,000) GALLONS; OR
(III) SPILLS OF OBJECTIONABLE SUBSTANCES AS DEFINED IN SECTION 4(11) OF THIS RULE.
(5) ANY SPILL FOR WHICH A SPILL RESPONSE HAS NOT BEEN DONE. (WATER POLLUTION CONTROL BOARD; 327 IAC 2–6.1–5; FILED FEB 25, 1997, 1:00 P.M.: 20 IR 1732; ERRATA FILED MAR 7, 1997, 2:25 P.M.: 20 IR 1738; READOPTED FILED JAN 10, 2001, 3:23 P.M.: 24 IR 1518; READOPTED FILED NOV 21, 2007, 1:16 P.M.: 20071219–IR–327070553BFA)

327 IAC 2-6.1-6 REPORTABLE SPILLS; TRANSPORTATION

AUTHORITY: IC 13–14–8–7
AFFECTED: IC 13–11–2; IC 13–18–1; IC 13–18–3; IC 13–18–8; IC 13–18–17
SEC. 6. THE FOLLOWING SPILLS FROM A MODE OF TRANSPORTATION MUST BE REPORTED:
(1) SPILLS THAT DAMAGE THE WATERS OF THE STATE SO AS TO CAUSE DEATH OR ACUTE INJURY OR ILLNESS TO HUMANS OR ANIMALS.
(2) SPILLS THAT DAMAGE SURFACE WATERS.
(3) SPILLS TO SOIL:
(A) SPILLS OF HAZARDOUS SUBSTANCES OR EXTREMELY HAZARDOUS SUBSTANCES WHEN THE AMOUNT SPILLED EXCEEDS ONE HUNDRED (100) POUNDS OR THE REPORTABLE QUANTITY, WHICHEVER IS LESS;
(B) SPILLS OF PETROLEUM WHEN THE AMOUNT SPILLED EXCEEDS FIFTY–FIVE (55) GALLONS; OR
C) SPILLS OF OBJECTIONABLE SUBSTANCES AS DEFINED IN SECTION 4(11) OF THIS RULE.
(4) ANY SPILL FOR WHICH A SPILL RESPONSE HAS NOT BEEN DONE. (WATER POLLUTION CONTROL BOARD; 327 IAC 2–6.1–6; FILED FEB 25, 1997, 1:00 P.M.: 20 IR 1733; READOPTED FILED JAN 10, 2001, 3:23 P.M.: 24 IR 1518; READOPTED FILED NOV 21, 2007, 1:16 P.M.: 20071219–IR–327070553BFA)

327 IAC 2-6.1-7 REPORTABLE SPILLS; RESPONSIBILITIES

AUTHORITY: IC 13–14–8–7
AFFECTED: IC 13–11–2; IC 13–18–1; IC 13–18–3; IC 13–18–8; IC 13–18–17
SEC. 7. ANY PERSON WHO OPERATES, CONTROLS, OR MAINTAINS ANY MODE OF TRANSPORTATION OR FACILITY FROM WHICH A SPILL OCCURS SHALL, UPON DISCOVERY OF A REPORTABLE SPILL TO THE SOIL OR SURFACE WATERS OF THE STATE, DO THE FOLLOWING:
(1) CONTAIN THE SPILL, IF POSSIBLE, TO PREVENT ADDITIONAL SPILLED MATERIAL FROM ENTERING THE WATERS OF THE STATE.
(2) UNDERTAKE OR CAUSE OTHERS TO UNDERTAKE ACTIVITIES NEEDED TO ACCOMPLISH A SPILL RESPONSE.
(3) AS SOON AS POSSIBLE, BUT WITHIN TWO (2) HOURS OF DISCOVERY, COMMUNICATE A SPILL REPORT TO THE DEPARTMENT OF ENVIRONMENTAL MANAGEMENT, OFFICE OF LAND QUALITY, EMERGENCY RESPONSE SECTION: AREA CODE 1–888–233–7745 FOR IN–STATE CALLS (TOLL FREE), (317) 233–7745 FOR OUT–OF–STATE CALLS. IF NEW OR UPDATED SPILL REPORT INFORMATION BECOMES KNOWN THAT INDICATES A SIGNIFICANT INCREASE IN THE LIKELIHOOD OF DAMAGE TO THE WATERS OF THE STATE, THE RESPONSIBLE PARTY SHALL NOTIFY THE DEPARTMENT AS SOON AS POSSIBLE BUT WITHIN TWO (2) HOURS OF THE TIME THE NEW OR UPDATED INFORMATION BECOMES KNOWN.
(4) SUBMIT TO THE INDIANA DEPARTMENT OF ENVIRONMENTAL MANAGEMENT, OFFICE OF LAND QUALITY, EMERGENCY RESPONSE SECTION (MC 66–30), 2525 N. SHADELAND AVE., SUITE 100, INDIANAPOLIS, IN 46219–1787, A WRITTEN COPY OF THE SPILL REPORT IF REQUESTED IN WRITING BY THE DEPARTMENT.
(5) EXCEPT FROM MODES OF TRANSPORTATION OTHER THAN PIPELINES, EXERCISE DUE DILIGENCE AND DOCUMENT ATTEMPTS TO NOTIFY THE FOLLOWING:
(A) FOR SPILLS TO SURFACE WATER THAT CAUSE DAMAGE, THE NEAREST AFFECTED DOWNSTREAM WATER USER LOCATED WITHIN TEN (10) MILES OF THE SPILL AND IN THE STATE OF INDIANA; AND
(B) FOR SPILLS TO SOIL OUTSIDE THE FACILITY BOUNDARY, THE AFFECTED PROPERTY OWNER OR OWNERS, OPERATOR OR OPERATORS, OR OCCUPANT OR OCCUPANTS. (WATER POLLUTION CONTROL BOARD; 327 IAC 2–6.1–7; FILED FEB 25, 1997, 1:00 P.M.: 20 IR 1733; READOPTED FILED JAN 10, 2001, 3:23 P.M.: 24 IR 1518; ERRATA FILED FEB 6, 2006, 11:15 A.M.: 29 IR 1936; ERRATA FILED OCT 20, 2006, 10:08 A.M.: 20061101–IR–327060497ACA; READOPTED FILED NOV 21, 2007, 1:16 P.M.: 20071219–IR–327070553BFA; ERRATA FILED MAY 27, 2008, 2:06 P.M.: 20080625–IR–327080419ACA)

327 IAC 2-6.1-8 EMERGENCY SPILL RESPONSE ACTIONS

AUTHORITY: IC 13–14–8–7
AFFECTED: IC 13–11–2; IC 13–18–1; IC 13–18–3; IC 13–18–8; IC 13–18–17
SEC. 8. NOTWITHSTANDING ANY OTHER SECTION OF THIS RULE, EMERGENCY SPILL RESPONSE ACTIONS TAKE PRECEDENCE OVER REPORTING REQUIREMENTS, AND WHEN EMERGENCY SPILL RESPONSE ACTIVITIES RENDER SPILL REPORTING INCONSISTENT WITH EFFECTIVE RESPONSE ACTIVITIES, COMMUNICATION OF THE SPILL REPORT TO THE INDIANA DEPARTMENT OF ENVIRONMENTAL MANAGEMENT MAY BE DELAYED. IN SITUATIONS WHERE THE SPILL REPORT IS DELAYED, THE BURDEN OF PROVING THE NEED FOR THE DELAY SHALL BE UPON THE RESPONSIBLE PERSON. (WATER POLLUTION CONTROL BOARD; 327 IAC 2–6.1–8; FILED FEB 25, 1997, 1:00 P.M.: 20 IR 1734; READOPTED FILED JAN 10, 2001, 3:23 P.M.: 24 IR 1518; READOPTED FILED NOV 21, 2007, 1:16 P.M.: 20071219–IR–327070553BFA)

327 IAC 2-6.1-9 COMPLIANCE CONFIRMATION

AUTHORITY: IC 13–14–8–7
AFFECTED: IC 13–11–2; IC 13–18–1; IC 13–18–3; IC 13–18–8; IC 13–18–17
SEC. 9. WHEN SPILL REPORTING AND RESPONSE, AS PROVIDED FOR IN THIS RULE, HAS OCCURRED, THE DEPARTMENT SHALL, UPON REQUEST, ISSUE A LETTER CONFIRMING COMPLIANCE WITH THIS RULE AND STATING THAT NO FURTHER ACTION IS REQUIRED UNDER THIS RULE. (WATER POLLUTION CONTROL BOARD; 327 IAC 2–6.1–9; FILED FEB 25, 1997, 1:00 P.M.: 20 IR 1734; READOPTED FILED JAN 10, 2001, 3:23 P.M.: 24 IR 1518; READOPTED FILED NOV 21, 2007, 1:16 P.M.: 20071219–IR–327070553BFA)

SCALE: 1" = 40'
0 20 40 80

Know what's **below.**
Call before you dig.
Within Indiana Call
811 or 800–382–5544
24 Hours a Day, 7 Days a Week.
PER INDIANA STATE LAW IC 8–1–26. IT IS AGAINST THE LAW TO EXCAVATE WITHOUT NOTIFYING THE UNDERGROUND LOCATION SERVICE TWO (2) WORKING DAYS BEFORE COMMENCING WORK.

PRELIMINARY CONSTRUCTION PLANS

10505 N. College Avenue
Indianapolis, Indiana 46280
weihe.net
317 | 846 - 6611
800 | 452 - 6408
317 | 843 - 0546 *fax*
ALLAN H. WEIHE, P.E., L.S. - FOUNDER
WEIHE ENGINEERS
Land Surveying | Civil Engineering
Landscape Architecture

PROJECT NO.:	W12.0262
DWG NAME:	120262–C104 eros.dwg
DESIGNED BY:	EAC/MG
DRAWN BY:	EAC/MG
CHECKED BY:	JKS
DATE:	06.29.2012

REVISIONS AND ISSUES | DATE | BY

JAMES K. SHINNEMAN REGISTERED NO. 10200392 STATE OF INDIANA PROFESSIONAL ENGINEER
NOT APPROVAL FOR CONSTRUCTION
JAMES K. SHINNEMAN P.E. 10200392

PREPARED FOR:
EPIPHANY EVANGELICAL LUTHERAN CHURCH PHASE ONE
156TH AND DITCH ROAD, WESTFIELD IN
SWPPP (PHASE II) SPECIFICATIONS
Part of the SE Corner of SW/1/4 of Section 10, Township 18 North, Range 3 East, Washington Township, Hamilton County, Indiana

SHEET NO.
C104a
PROJECT NO.
W12.0262

LOCATION: H:\2012\w120262\Engineering\design\conset\120262–C104 eros.dwg
LAYOUT: C104A – SWPPP 2 SPECS
DATE/TIME: June 29, 2012 – 7:57am
PLOTTED BY: cartere

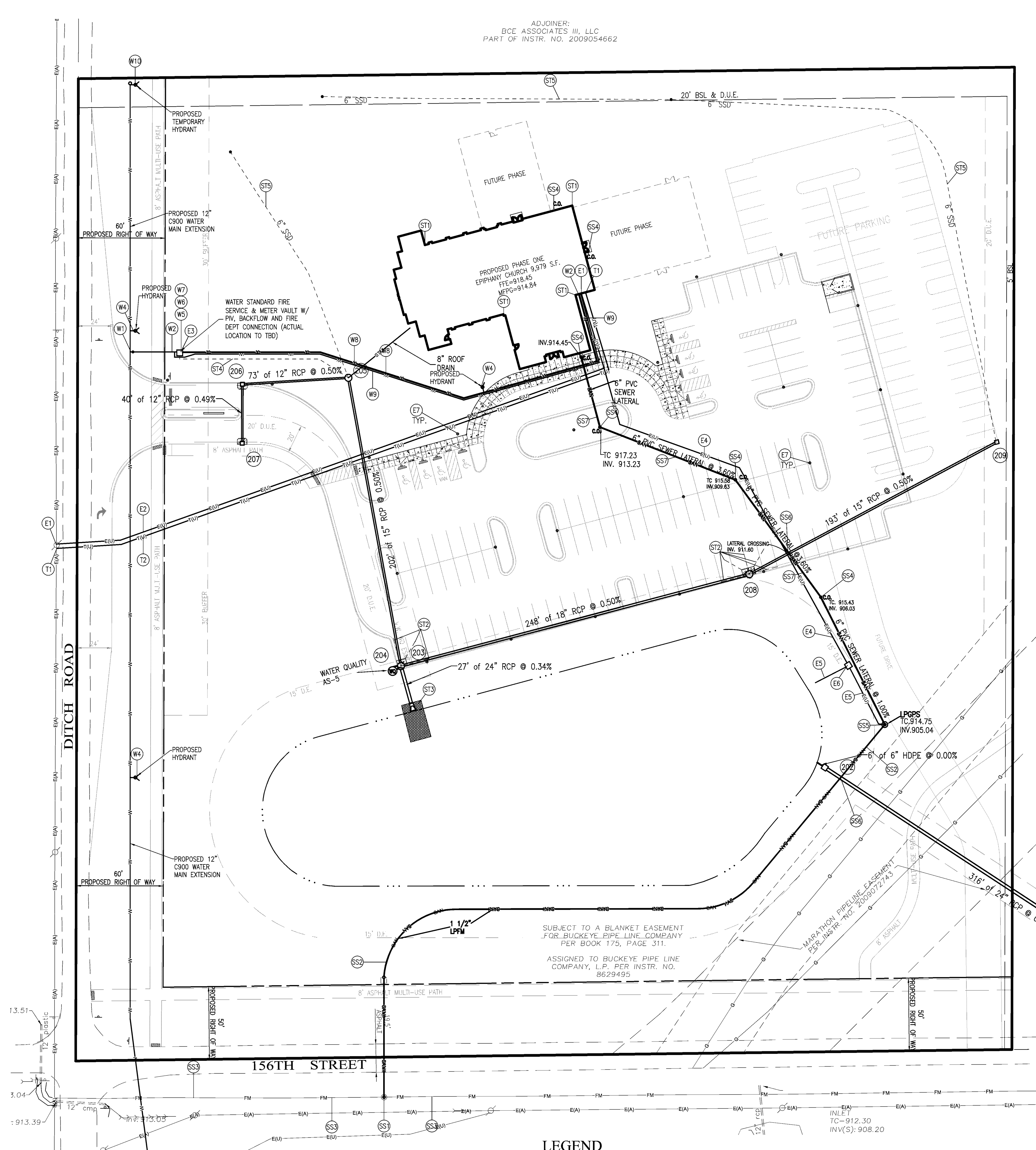

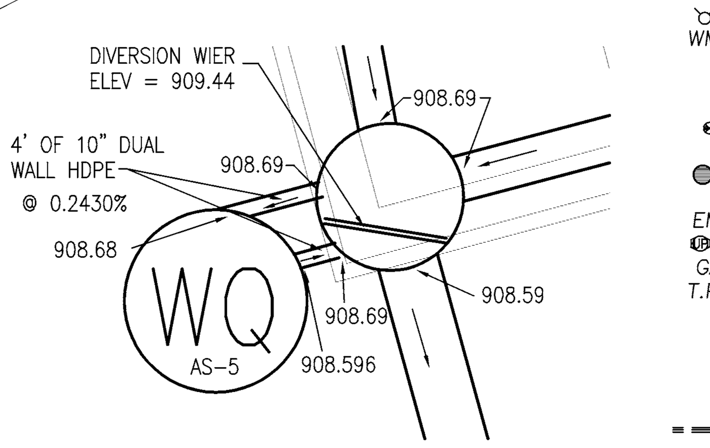

UTILITY PLAN NOTES:

SANITARY SEWER NOTES:

(SS1) CONNECT PROPOSED 1½ SANITARY SEWER LPFM TO EXISTING SANITARY SEWER FORCEMAIN. COORDINATE CONNECTION WITH MEP. PROVIDE CLEANOUTS AS REQUIRED/SHOWN. VERIFY INVERTS ON EXISTING LINE AND COORDINATE CONDITIONS WITH MEP. ADJUST AS REQUIRED

(SS2) PROPOSED SANITARY FORCEMAIN

(SS3) EXISTING SANITARY FORCEMAIN

(SS4) PROPOSED SANITARY LATERAL CLEANOUT TYPE 2. REFER TO DETAIL ON SHEET C205.

(SS5) SANITARY GRINDER PUMP

(SS6) PROVIDE 18" MINIMUM VERTICAL CLEARANCE BETWEEN SANITARY/STORM SEWER PIPES AND ALL OTHER PIPES. INSTALL CONCRETE CRADLE IF CLEARANCE IS LESS THAN 18"

(SS7) PROPOSED 6" SANITARY SEWER LATERAL

SITE WATER SERVICE NOTES:

(W1) COORDINATE AND CONNECT 6" WATER SERVICE LINE TO PROPOSED 12" WATER MAIN

(W2) COORDINATE CONNECTION OF 2" TYPE-K COPPER SERVICE LINE AND 6" FIRE LINE WITH PLUMBING DRAWINGS.

(W3) EXISTING FIRE HYDRANT W/ VALVE

(W4) PROPOSED FIRE HYDRANT.

(W5) PROPOSED POST INDICATOR VALVE

(W6) FIRE DEPARTMENT CONNECTION (5" STORZ CONNECTION).

(W7) PROPOSED WATER BACKFLOW

(W8) PROPOSED 6" PVC FIRE SERVICE LINE

(W9) PROPOSED 2" DOMESTIC SERVICE LINE

(W10) TEMPORARY FIRE HYDRANT W/ VALVE

STORM SEWER NOTES:

(ST1) CONNECT DOWNSPOUTS TO 8" HDPE ROOF DRAINS AT 0.50% MINIMUM

(ST2) 4" SPIDER DRAINS

(ST3) RIP-RAP WITH NON-WOVEN FILTER FABRIC PER WESTFIELD DETAILS

(ST4) PROVIDE 6" SSD TO SUMP IN VAULT

(ST5) 6" SSD W/ RISER

SITE ELECTRIC NOTES:

(E1) COORDINATE AND CONNECT BUILDING ELECTRICAL LINE TO ELECTRICAL TRANSFORMER. COORDINATE CONNECTION WITH POWER COMPANY AND ELECTRICAL DRAWINGS. ADJUST AS REQUIRED. 2-4" PVC CONDUITS TO BE INSTALLED WITH PULL STRINGS. 1-120/208V 3PH 225 AMP, 1-120/208V, 3 PHASE, 1200 AMP REQUIRED. SEE THE MECHANICAL, ELECTRICAL, AND PLUMBING SYSTEMS SCHEMATIC DESIGN NARRATIVE FOR EPIPHANY LUTHERAN CHURCH FOR FURTHER DETAILS

(E2) PROPOSED TRANSFORMER PAD LOCATION. COORDINATE WITH DUKE ENERGY IF A NEW TRANSFORMER IS REQUIRED.

(E3) PROVIDE ELECTRIC SERVICE TO WATER VAULT FOR SUMP

(E4) PROVIDE ELECTRIC SERVICE TO DISCONNECT SWITCH

(E5) PROVIDE ELECTRIC SERVICE TO GRINDER PUMP AND POND FOUNTAIN

(E6) ELECTRIC DISCONNECT SWITCH

(E7) PROVIDE ELECTRIC TO LIGHT POLES, CONDUIT AS NEEDED.

SITE TELEPHONE NOTES:

(T1) COORDINATE AND CONNECT BUILDING TELEPHONE SERVICE LINE TO CONNECTION POINT AS PROVIDED. COORDINATE CONNECTION WITH SITE DRAWINGS AND SERVICE PROVIDER FOR RELOCATION OF PEDESTAL. ADJUST AS REQUIRED. 4" PVC CONDUIT TO BE INSTALLED WITH PULL STRINGS. CONTRACTOR TO PROVIDE #6 GROUND WIRE AT THE D-MARC LOCATION. 7 LINES ANTICIPATED FOR SERVICE. (4 PHONE, 1 FA, 1 SECURITY AND 1 FAX/MODEM)

(T2) PROPOSED PEDESTAL LOCATION. COORDINATE WITH SERVICE PROVIDER.

SITE GAS SERVICE NOTES:

(G1) CONNECT PROPOSED GAS SERVICE TO EXISTING GAS LINE. REFER TO ARCHITECTURAL DRAWINGS AND COORDINATE WITH SERVICE PROVIDER.

SITE CABLE SERVICE NOTES:

(C1) PROVIDE 2" CAPPED PVC CONDUIT FOR CABLE SERVICE CONNECTION. COORDINATE CONNECTION WITH SITE DRAWINGS. ADJUST AS REQUIRED. CONDUIT TO BE INSTALLED WITH PULL STRINGS.

GENERAL NOTES:

1) THE CONTRACTOR SHALL CONTACT ALL APPLICABLE UTILITIES AND VERIFY ANY AND ALL FEES ASSOCIATED WITH THE INSTALLATION OF ALL UTILITIES.
2) PROVIDE THRUST BLOCKS FOR ALL WATER LINE BENDS AND TEES, INCLUDING TAP CONNECTION.
3) CONTRACTOR SHALL COORDINATE WITH WATER COMPANY FOR DOMESTIC AND FIRE SERVICE. CONNECT TO BUILDING DOMESTIC AND FIRE LINE. COORDINATE WITH PLUMBING DRAWINGS.
4) COORDINATE LOCATION OF ELECTRICAL AND TELEPHONE LINES WITH LOCAL UTILITIES.
5) COORDINATE LOCATION AND SIZE OF GAS SERVICE CONNECTION AND INSTALLATION OF SERVICE LINE AND METER WITH GAS COMPANY.
6) COORDINATE LOCATIONS AND CONNECTIONS OF BUILDING STORM LINES WITH MECHANICAL DRAWINGS.
7) VERIFY EXISTING INVERT AND LOCATION OF SANITARY SEWER. ADJUST INVERTS AS REQUIRED. DOCUMENT ANY CHANGES.
8) MAINTAIN 10' HORIZONTAL AND 18" VERTICAL CLEARANCE BETWEEN STORM / SANITARY SEWER SYSTEMS AND DOMESTIC/FIRE LINE SERVICE.
9) FOLLOW ALL LOCAL AND STATE CODES IN REFERENCE TO DOMESTIC/FIRE LINE INSTALLATION AND STORM SEWER / SANITARY SEWER INSTALLATION.
10) COORDINATE LOCATION OF REQUIRED CONDUITS FOR LIGHT POLES, TELEPHONE SERVICE AND IRRIGATION SYSTEM.
11) COORDINATE UTILITY CONDUITS WITH SERVICE PROVIDERS.
12) SANITARY SEWER LATERAL, WATER SERVICE, & ELECTRICAL/TELEPHONE CONDUITS SHALL BE GRANULAR BACKFILL FOR ENTIRE RUN.

BUCKEYE PARTNERS RIGHT OF WAY RESTRICTIONS DATED 03/2012
WHEN ANY CONSTRUCTION ACTIVITY IS CONDUCTED IN OR AROUND OUR PIPELINE RIGHT-OF-WAY, BUCKEYE'S ON-SITE INSPECTOR MUST BE PRESENT AT ALL TIMES. NO WORK SHALL TAKE PLACE WITHOUT A BUCKEYE ON-SITE INSPECTOR PRESENT. FOR THIS FREE-OF-CHARGE SERVICE, CONTACT OUR LOCAL FIELD OPERATIONS MANAGER AT THE BUCKEYE FACILITY NEAREST TO YOUR PROPOSED PROJECT.

GENERAL REQUIREMENTS FOR ROADS, DRIVEWAYS SIDEWALKS AND PARKING AREAS:
A. ROADS, DRIVEWAYS, SIDEWALKS, OR PARKING AREAS SHALL NOT BE CONSTRUCTED ACROSS THE RIGHT-OF-WAY WITHOUT BUCKEYE'S WRITTEN APPROVAL. UPON BUCKEYE'S APPROVAL, ROADS, DRIVEWAYS, AND SIDEWALKS SHALL CROSS PERPENDICULAR TO THE PIPELINE.
B. THE MAXIMUM ALLOWABLE COVER SHALL NOT EXCEED SIX (6) FEET WITHOUT BUCKEYE'S WRITTEN APPROVAL.
C. USE OF VIBRATORY EQUIPMENT LARGER THAN WALK-BEHIND UNITS IS NOT PERMITTED WITHIN 25 FEET OF THE PIPELINE.
D. ROADS OR DRIVEWAYS SHALL NOT BE INSTALLED LONGITUDINALLY WITHIN THE RIGHT-OF-WAY.
E. FOR ROADS AND DRIVEWAYS, A MINIMUM COVER OF 48 INCHES WITH A NET COVER OF 36 INCHES OF UNDISTURBED SOIL IS REQUIRED ABOVE THE PIPELINE.
F. A MINIMUM COVER OF 36 INCHES OVER THE PIPELINE IS REQUIRED AT ROAD DRAINAGE DITCHES. UPON BUCKEYE'S APPROVAL, THIS COVER CAN BE REDUCED TO 24 INCHES IF DITCH IS ROCK/RIP-RAP LINED AND 12 INCHES IF DITCH IS CONCRETE LINED.
G. FOR ASPHALT PARKING LOTS AND SIDEWALKS, A MINIMUM COVER OF 36 INCHES WITH A NET COVER OF 24 INCHES OF UNDISTURBED SOIL IS REQUIRED ABOVE THE PIPELINE. ADDITIONAL COVER MAY BE REQUIRED BY BUCKEYE BASED UPON SPECIFIC SITE CONDITIONS.

UTILITIES:
A. UTILITIES SHALL CROSS PERPENDICULAR TO THE PIPELINE.
B. UTILITIES ARE REQUIRED TO CROSS BENEATH THE PIPELINE WITH A MINIMUM CLEARANCE OF 24 INCHES. EXCEPTIONS TO BUCKEYE'S CLEARANCE REQUIREMENTS FOR UNDERGROUND SERVICE ENTRANCES TO SINGLE FAMILY DWELLINGS WILL BE REVIEWED ON A CASE-BY-CASE BASIS.
C. SAND OR SELECT FILL SHALL BE PLACED BETWEEN THE PIPELINE AND UTILITY (SEE SECTION 2.8).
D. UTILITIES INSTALLED PARALLEL TO THE PIPELINE SHALL BE REVIEWED BY BUCKEYE ON A CASE-BY-CASE BASIS. IF APPROVED, THE UTILITY SHALL BE NO CLOSER THAN 15 FEET FROM THE PIPELINE.
E. WARNING TAPE, IN ACCORDANCE WITH A.P.W.A. UNIFORM COLOR CODE, SHALL BE PLACED ABOVE UTILITY, 12 INCHES BELOW GROUND, FOR A DISTANCE OF 25 FEET ON EITHER SIDE OF CROSSING.
F. SIGNAGE SHALL BE PLACED AT CROSSING AS DETERMINED APPROPRIATE BY BUCKEYE.
G. TRENCHLESS EXCAVATIONS:
[1] UTILITIES INSTALLED BY A TRENCHLESS EXCAVATION METHOD (DIRECTIONAL DRILLING, JACKING, SLICK BORING, ETC.) SHALL BE REVIEWED BY BUCKEYE ON A CASE-BY-CASE BASIS.
[2] BUCKEYE RESERVES THE RIGHT TO SELECT THE METHOD OF CROSSING FOR THE PROPOSED UTILITY.
[3] A MINIMUM CLEARANCE OF 60 INCHES (5 FEET) BELOW THE PIPELINE IS REQUIRED.
[4] FOR DIRECTIONAL DRILLING OPERATIONS, A SURFACE WIRE TRACKING SYSTEM IS REQUIRED TO VERIFY THE EXACT LOCATION OF THE DRILL HEAD.
[5] A 4 FEET BY 4 FEET EXCAVATION WINDOW, 24 INCHES BELOW THE PIPELINE IS REQUIRED FOR VISUAL INSPECTION OF THE PIPELINE TO ENSURE THE DRILL (OR BORE) DOES NOT IMPACT THE PIPELINE.
[6] BLIND BORING IS NOT PERMITTED WITHIN BUCKEYE'S RIGHT-OF-WAY.

-NOTE-
RUN WATER LINE A MINIMUM OF 54" DEEP.
PROVIDE MINIMUM OF 10' HORIZONTAL & 2' VERTICAL CLEARANCE BETWEEN WATER & SANITARY LINE. SANITARY SEWER LINE IN PROXIMITY OF WATER LINE SHALL BE C900 WATER MAIN GRADE PVC.

STORM SEWER STRUCTURE DATA TABLE

STRUCTURE NUMBER	STRUCTURE TYPE	TOP OF CASTING	CASTING TYPE	INVERT
203	CES	910.42	N/A	1 Pipe – (204) INV IN = 908.50(N)
204	MANHOLE WITH WQ DIVERSION	913.98	NEENAH R-3286-8V	3 Pipe – (205) INV IN = 908.69(N) Pipe – (208) INV IN = 908.69(E) Pipe – (204) INV OUT = 908.59(S)
205	MANHOLE	913.76	BEEHIVE	2 Pipe – (206) INV IN = 909.80(W) Pipe – (205) INV OUT = 909.70(S)
206	INLET TYPE A	914.76	NEENAH R-3286-8V	2 Pipe – (207) INV IN = 910.26(S) Pipe – (206) INV OUT = 910.16(E)
207	INLET TYPE A	915.00	NEENAH R-3286-8V	1 Pipe – (207) INV OUT = 910.46(N)
208	MANHOLE	914.78	NEENAH R-3286-8V	2 Pipe – (209) INV IN = 910.03(NE) Pipe – (208) INV OUT = 909.93(W)
209	INLET TYPE A	913.36	BEEHIVE	1 Pipe – (209) INV OUT = 911.00(SW)

STORM SEWER STRUCTURE DATA TABLE

STRUCTURE NUMBER	STRUCTURE TYPE	TOP OF CASTING	CASTING TYPE	INVERT
200	MANHOLE	911.30	SOLID	1 Pipe – (201) INV IN = 905.08(N)
201	MANHOLE	913.00	SOLID	2 Pipe – (202) INV IN = 905.36(NW) Pipe – (201) INV OUT = 905.26(S)
202	OUTLET CONTROL	911.86	CUSTOM GRATE	2 Pipe – (203) INV IN = 908.50(NW) Pipe – (202) INV OUT = 906.60(SE)

STORM SEWER PIPE DATA TABLE

DOWNSTREAM STRUCTURE	UPSTREAM STRUCTURE	SIZE	LENGTH	SLOPE
203	204	24"	26.61'	0.34%
204	205	15"	201.67'	0.50%
205	206	12"	73.12'	0.50%
206	207	12"	40.50'	0.49%
208	204	18"	248.06'	0.50%
209	208	15"	193.06'	0.50%

STORM SEWER PIPE DATA TABLE

DOWNSTREAM STRUCTURE	UPSTREAM STRUCTURE	SIZE	LENGTH	SLOPE
	202	6"	6.35'	0.00%
201	200	24"	45.21'	0.40%
202	201	24"	315.68'	0.39%

LEGEND

- FH = EXIST. FIRE HYDRANT
- WM = EXIST. WATER METER/VALVE
- = EXIST. SIGN
- = EXIST. MONITOR WELL
- • PKF = EXIST. IRON PIN & OR PK (SET/FOUND)
- GM = EXIST. GAS METER
- = EXIST. GAS VALVE
- = EXIST. STORM INLET
- = EXIST. STORM/SAN./TELE. MANHOLE
- EM = EXIST. ELECTRIC METER
- = EXIST. POWER POLE/POWER POLE w/ LIGHT
- GA = EXIST. GUY ANCHOR
- T.Ped. = EXIST. TELEPHONE PEDESTAL
- AC = HVAC UNIT
- CO = EXIST. CLEANOUT
- MB = MAILBOX
- = EXIST. LIGHT
- BOL = EXIST. BOLLARD
- = EXIST. SANITARY SEWER LINE
- = EXIST. STORM SEWER LINE
- 892 = EXIST. CONTOURS
- = CONCRETE END SECTION (C.E.S.)
- GP = GATE POST
- = TRANSFORMER
- = RIGHT-OF-WAY LINE
- = PROPOSED SANITARY SEWER LINE
- = PROPOSED STORM SEWER LINE
- STM = PROPOSED HDPE ROOF DRAIN
- = PROPOSED PIPE BOLLARD
- = PROPOSED MANHOLE
- 892 = PROPOSED CONTOURS
- 894.50 = PROPOSED ELEVATION
- = DRAINAGE FLOW ARROW
- W = WATER LINE
- G = GAS LINE
- F.F.E. = FINISH FLOOR ELEVATION
- TC = TOP OF (MANHOLE / INLET) CASTING
- INV = INVERT (BOTTOM) ELEVATION OF (PIPE)
- RCP = REINFORCED CONCRETE PIPE
- CMP = CORRUGATED METAL PIPE
- CPP = CORRUGATED PLASTIC PIPE
- PVC = POLYVINYL CHLORIDE PIPE
- STR. = STRUCTURE
- M.E.G. = MATCH EXISTING GRADE
- SSD = SUB-SURFACE DRAINAGE
- TOC = TOP OF CURB
- GUT = GUTTER
- OUL = OVERHEAD UTILITY LINE
- T = TELEPHONE LINE
- TBM = TEMPORARY BENCHMARK
- E = ELECTRIC LINE
- = CONSTRUCTION LIMITS

SCALE: 1" = 40'
0 20 40 80

Know what's below. Call before you dig.
Within Indiana Call
811 or 800-382-5544
24 Hours a Day, 7 Days a Week.
PER INDIANA STATE LAW IC 8-1-26. IT IS AGAINST THE LAW TO EXCAVATE WITHOUT NOTIFYING THE UNDERGROUND LOCATION SERVICE TWO (2) WORKING DAYS BEFORE COMMENCING WORK.

PRELIMINARY CONSTRUCTION PLANS

10505 N. College Avenue
Indianapolis, Indiana 46280
weihe.net
317 | 846 - 6611
800 | 452 - 6408
317 | 843 - 0546 fax
ALLAN H. WEIHE, P.E., L.S. - FOUNDER
WEIHE ENGINEERS
Land Surveying | Civil Engineering
Landscape Architecture

PROJECT NO.: W12.0262
DWG NAME: 120262-C105 util.dwg
DESIGNED BY: EAC/MG
DRAWN BY: EAC/MG
CHECKED BY: JKS
DATE: 06.29.2012

REVISIONS AND ISSUES	DATE	BY

JAMES K. SHINNEMAN REGISTERED No. 10200392 STATE OF INDIANA PROFESSIONAL ENGINEER
NOT APPROVED FOR CONSTRUCTION
JAMES K. SHINNEMAN P.E. 10200392

PREPARED FOR:
EPIPHANY EVANGELICAL LUTHERAN CHURCH PHASE ONE
156TH AND DITCH ROAD, WESTFIELD IN
UTILITY PLAN
Part of the SE Corner of SW/1/4 of Section 10, Township 18 North, Range 3 East, Washington Township, Hamilton County, Indiana

SHEET NO. C105
PROJECT NO. W12.0262

LOCATION: H:\2012\w120262\Engineering\design\conset\120262-C105 util.dwg
LAYOUT: C105 – UTILITY PLAN
DATE/TIME: June 29, 2012 – 7:57am
PLOTTED BY: cartere

156TH STREET TRAFFIC PLAN

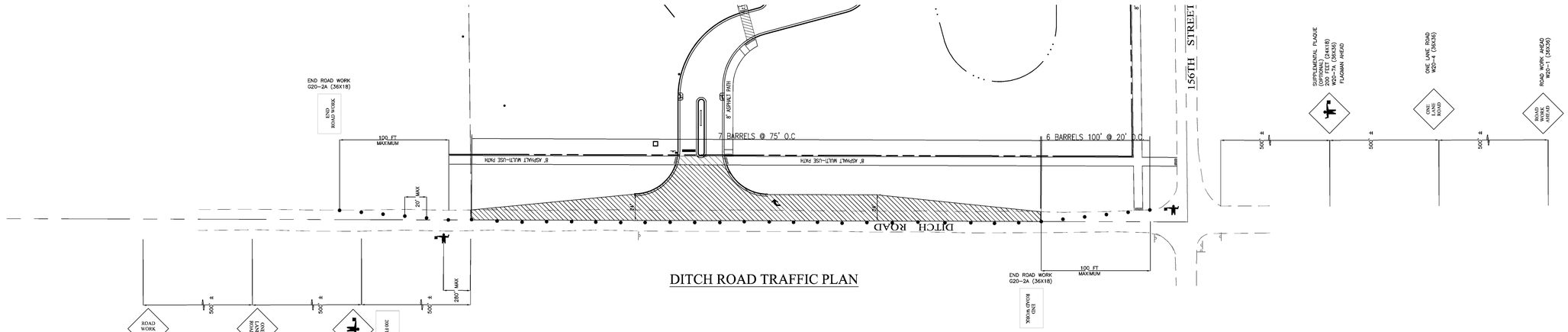

DITCH ROAD TRAFFIC PLAN

MAINTENANCE OF TRAFFIC NOTES

DURING THE COURSE OF CONSTRUCTION, ONE LANE REDUCTION WILL BE ALLOWED BETWEEN THE HOURS OF 9am. AND 4pm. CONSTRUCTION MUST BE COMPLETE WITHIN 5 DAYS AND THE LANE MUST BE REOPENED AT THE END OF EACH DAY THAT IT IS CLOSED.

THE BARRRICADES SHALL BE MOVED TO THE EDGE OF PAVEMENT AT TIMES OF NO CONSTRUCTION TO ALLOW FOR UNOBSTRUCTED TRAFFIC FLOW THROUGH THE CONSTRUCTION AREA.

FENCING AND BARRICADES SHALL BE PLACED SO AS TO ENCOMPASS ANY EXPOSED TRENCH AREA AT TIMES OF NO CONSTRUCTION.

THE ROAD WORK AHEAD SIGN SHALL ALSO BE COVERED OR TURNED AWAY FROM THE ROADWAY AT TIMES OF NO CONSTRUCTION.

THE MAINTENANCE OF TRAFFIC SHALL CONFORM TO THE STANDARD SPECIFICATIONS OF THE INDIANA DEPARTMENT OF TRANSPORTATION STANDARD DETOUR SHEETS AND THE INDIANA MANUAL ON UNIFORM TRAFFIC CONTROL DEVICES FOR STREETS AND HIGHWAYS DATED 2003 AND ALL SUBSEQUENT REVISIONS.

ANY DROP OFF ADJACENT TO THE TRAVEL LANE WHICH EXCEEDS 4" MUST HAVE TYPE II DRUMS WITH TYPE 'A' FLASHERS SPACED EVERY 100'

LEGEND

- • = DRUM TYPE BARRICADES (INDOT SPEC. 801.09) SPACED AS NOTED WITH TYPE "C" STEADY BURN LIGHTS.
- ◇ = ADVANCED WARNING SIGN
- ▨ = WORK AREA
- = FLAGGER
- ▯ = OPTIONAL PLAQUE

SIGNAGE SCHEDULE

- 4 – W20-7A (36x36) "FLAGMAN AHEAD"
- 2 – W20-4 (36x36) "ONE LANE ROAD 525 FEET"
- 4 – W20-1 (36x36) "ROAD WORK AHEAD"
- 35 – DRUM TYPE BARRICADES (INDOT SPEC. 801.09) SPACED AS NOTED WITH TYPE "C" STEADY BURN LIGHTS
- 2 – G20-2A (36x18) "END ROAD WORK"
- 2 – FLAGGERS

NOTES:

STAGING AND EQUIPMENT STORAGE WILL OCCUR ON WORK SITE.

PRELIMINARY CONSTRUCTION PLANS

WEIHE ENGINEERS
Land Surveying | Civil Engineering
Landscape Architecture
10505 N. College Avenue
Indianapolis, Indiana 46280
weihe.net
317 | 846 - 6611
800 | 452 - 6408
317 | 843 - 0546 *fax*
ALLAN H. WEIHE, P.E., L.S. - FOUNDER

PROJECT NO.	W12.0262
DWG NAME	120262-C106 trof.dwg
DESIGNED BY:	EAC/MG
DRAWN BY:	EAC/MG
CHECKED BY:	JKS
DATE:	06/28/2012

REVISIONS AND ISSUES	BY	DATE

JAMES K. SHINNEMAN REGISTERED LAND SURVEYOR NO. 10200392 STATE OF INDIANA PROFESSIONAL ENGINEER
NOT APPROVED FOR CONSTRUCTION

JAMES K. SHINNEMAN P.E. 10200392

PREPARED FOR:
EPIPHANY EVANGELICAL LUTHERAN CHURCH PHASE ONE

MAINTENANCE OF TRAFFIC PLAN
156TH AND DITCH ROAD, WESTFIELD IN
Part of the SE Corner of SW1/4 of Section 10, Township 18 North, Range 3 East, Washington Township, Hamilton County, Indiana

SHEET NO.
C106

PROJECT NO.
W12.0262

811 Know what's **below.** **Call** before you dig.
Within Indiana Call 811 or 800-382-5544
24 Hours a Day, 7 Days a Week.
PER INDIANA STATE LAW IC 8-1-26, IT IS AGAINST THE LAW TO EXCAVATE WITHOUT NOTIFYING THE UNDERGROUND LOCATION SERVICE TWO (2) WORKING DAYS BEFORE COMMENCING WORK.

LOCATION: H:\2011\W12\120262\Engineering\design\Consol\120262-C106 trof.dwg
LAYOUT: MAINTENANCE OF TRAFFIC
DATE/TIME: June 29, 2012 – 7:58am
PLOTTED BY: Colleen

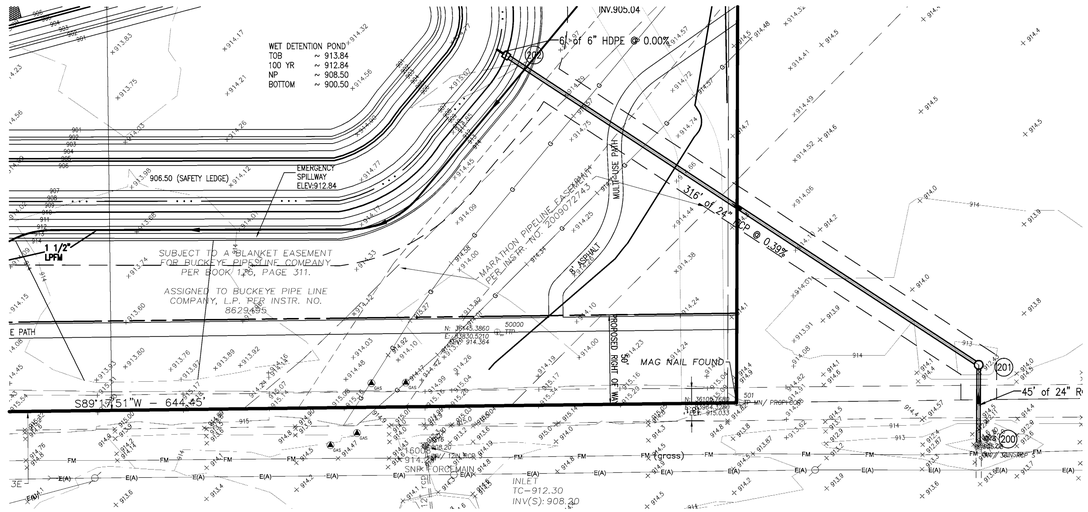

VERTICAL SCALE 1/5

HORIZONTAL SCALE: SCALE: 1" = 40'

0 20 40 80

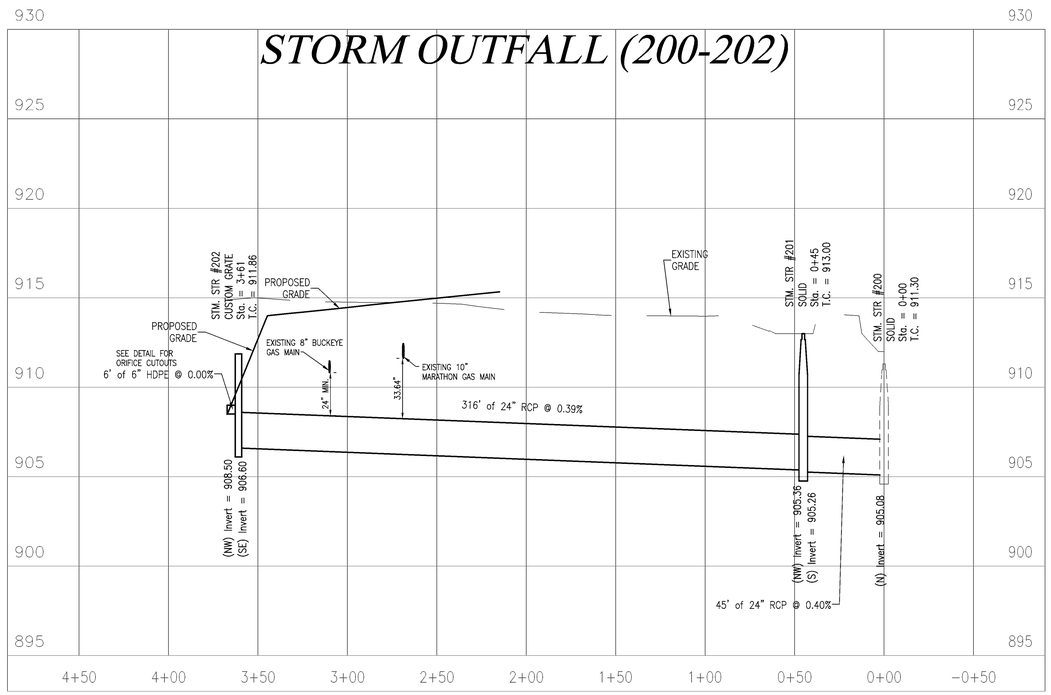

-NOTE-
STRUCTURES DEEPER THAN 4' MUST BE ACCESSIBLE WITH STEPS

811 Know what's below. Call before you dig.
Within Indiana Call 811 or 800-382-5544
24 Hours a Day, 7 Days a Week.
PER INDIANA STATE LAW IC 8-1-26, IT IS AGAINST THE LAW TO EXCAVATE WITHOUT NOTIFYING THE UNDERGROUND LOCATION SERVICE TWO (2) WORKING DAYS BEFORE COMMENCING WORK.

WEIHE ENGINEERS
Land Surveying | Civil Engineering
Landscape Architecture
10505 N. College Avenue
Indianapolis, Indiana 46280
weihe.net
317 | 846 - 6611
800 | 452 - 6408
317 | 843 - 0546 fax
ALLAN H. WEIHE, P.E., L.S. - FOUNDER

PROJECT NO.: W12.0262
DWG NAME: 1:20262/2012/CIVIL/DWG
DESIGNED BY: EAC/MG
DRAWN BY: EAC/MG
CHECKED BY: JKS
DATE: 06.29.2012

REVISIONS AND ISSUES

JAMES K. SHINNEMAN REGISTERED PROFESSIONAL ENGINEER NO. 10200392 STATE OF INDIANA
APPROVED FOR CONSTRUCTION
NOT FOR CONSTRUCTION

JAMES K. SHINNEMAN P.E. 10200392

PRELIMINARY CONSTRUCTION PLANS

PREPARED FOR:
EPIPHANY EVANGELICAL LUTHERAN CHURCH PHASE ONE
156TH AND DITCH ROAD, WESTFIELD IN

STORM SEWER PLAN AND PROFILE
Part of the SE Corner of SW/1/4 of Section 10, Township 18 North, Range 3 East, Washington Township, Hamilton County, Indiana

SHEET NO. C107
PROJECT NO. W12.0262

LOCATION: H:\2012\w12026\Engineering\design\conset\120262-C107 prp.dwg
LAYOUT: C107 - STORM PNP
DATE/TIME: June 29, 2012 - 7:59am
PLOTTED BY: cortere

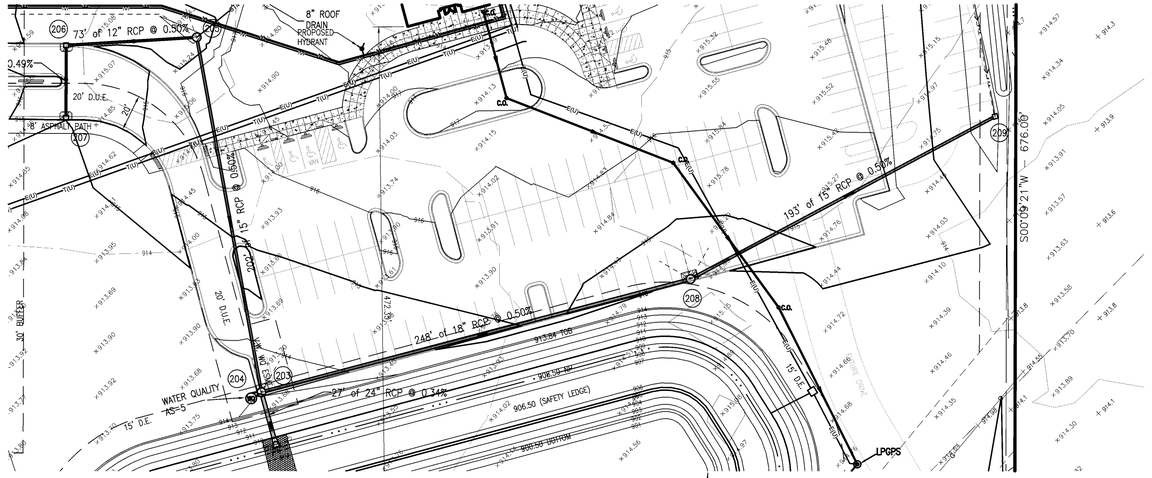

VERTICAL SCALE 1/5

HORIZONTAL SCALE:
SCALE: 1" = 40'

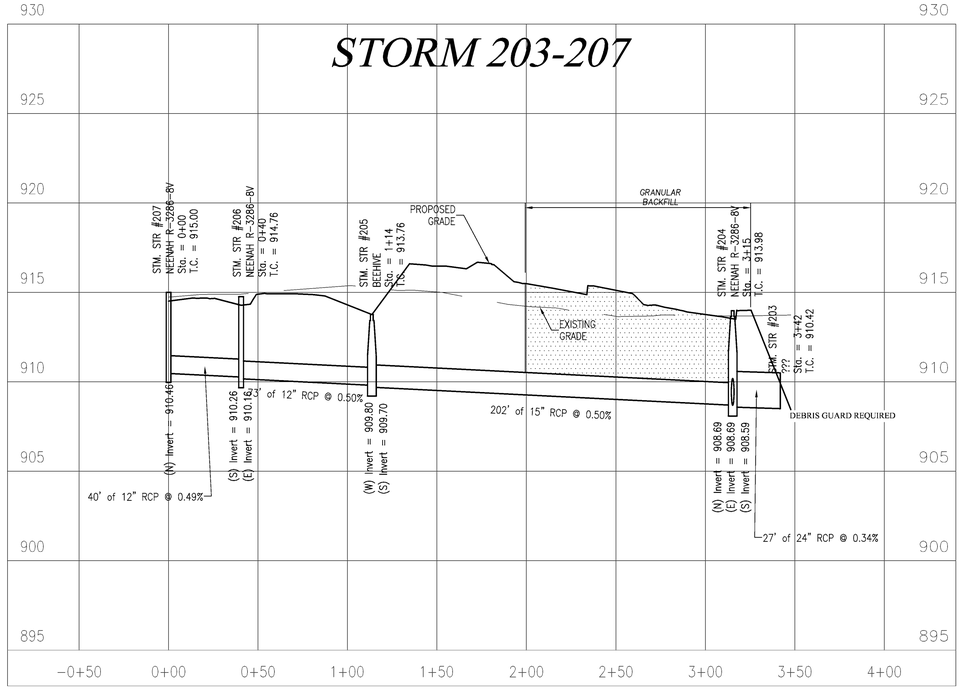

Length (ft)

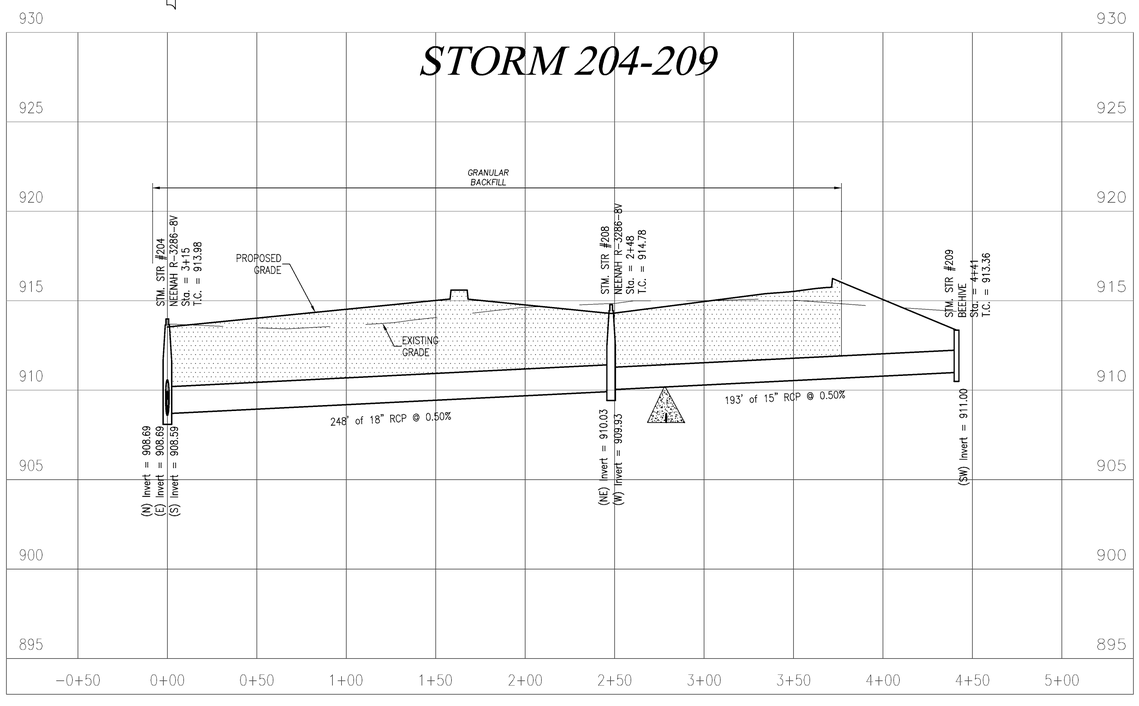

Length (ft)

-NOTE-
STRUCTURES DEEPER THAN 4' MUST BE ACCESSIBLE WITH STEPS

PRELIMINARY CONSTRUCTION PLANS

Know what's below. Call before you dig.
Within Indiana Call
811 or 800-382-5544
24 Hours a Day, 7 Days a Week.
PER INDIANA STATE LAW IC 8-1-26, IT IS AGAINST THE LAW TO EXCAVATE WITHOUT NOTIFYING THE UNDERGROUND LOCATION SERVICE TWO (2) WORKING DAYS BEFORE COMMENCING WORK.

PREPARED FOR:
EPIPHANY EVANGELICAL LUTHERAN CHURCH PHASE ONE
156TH AND DITCH ROAD, WESTFIELD IN

STORM SEWER PLAN AND PROFILE
Part of the SE Corner of SW1/4 of Section 10, Township 18 North, Range 3 East, Washington Township, Hamilton County, Indiana

SHEET NO.
C108

PROJECT NO.
W12.0262

REVISIONS AND ISSUES

DATE | BY

JAMES K. SHINNEMAN P.E. 10200392
APPROVAL NOT FOR CONSTRUCTION
REGISTERED PROFESSIONAL ENGINEER
STATE OF INDIANA
10200392

WEIHE ENGINEERS
Land Surveying | Civil Engineering
Landscape Architecture
10505 N. College Avenue
Indianapolis, Indiana 46280
weihe.net
317 | 846 - 6611
800 | 452 - 6408
317 | 843 - 0546 fax
ALLAN H. WEIHE, P.E., L.S. - FOUNDER

PROJECT NO.: W12.0262
DWG NAME: 12\0262\C108\W12\0262
DESIGNED BY: EAC/MG
DRAWN BY: EAC/MG
CHECKED BY: JKS
DATE: 06.29.2012

LOCATION: H:\2012\w12\0262\Engineering\design\conset\120262-C107 prp.dwg
LAYOUT: C108 - STORM PNP
DATE/TIME: June 29, 2012 - 7:59am
PLOTTED BY: carlere

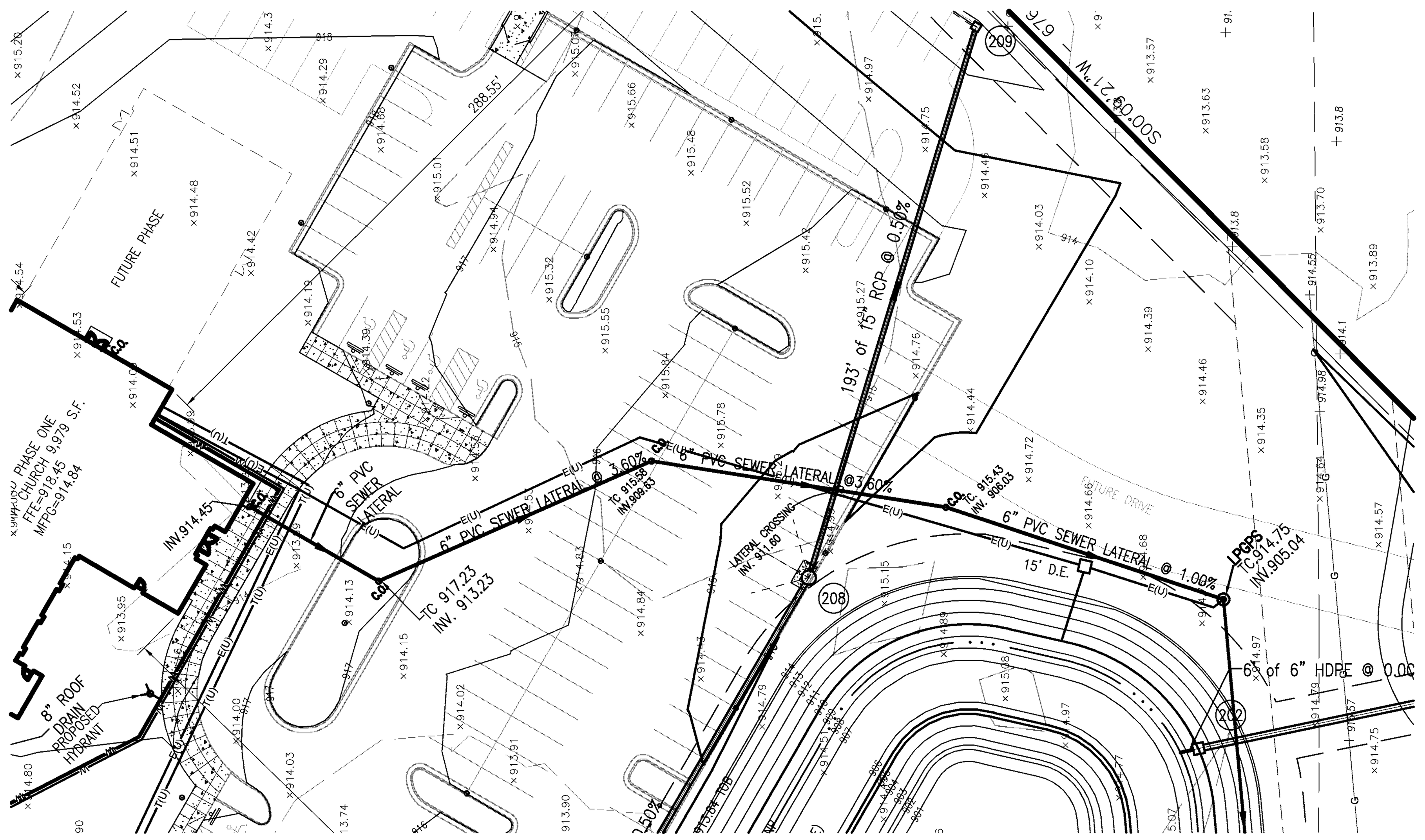

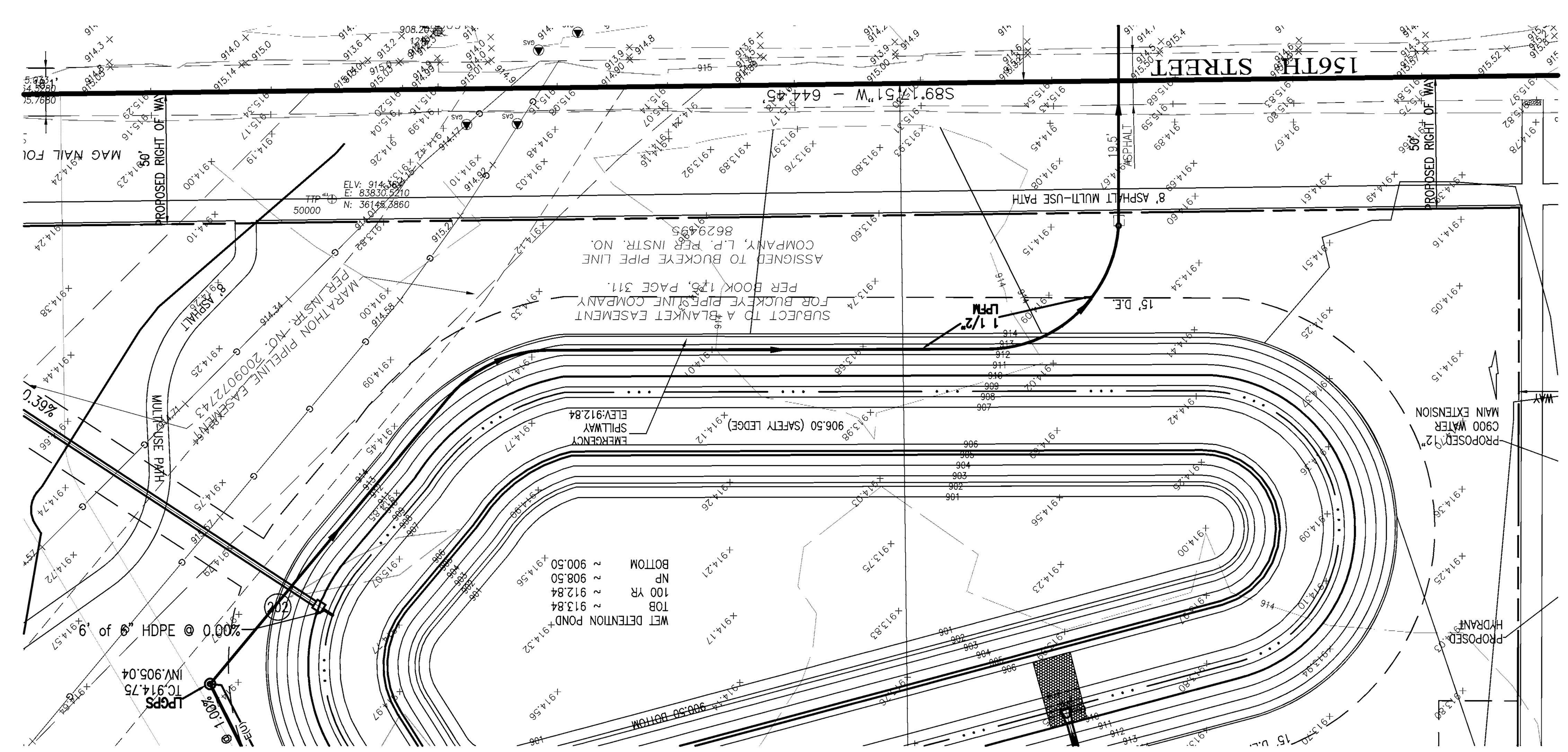

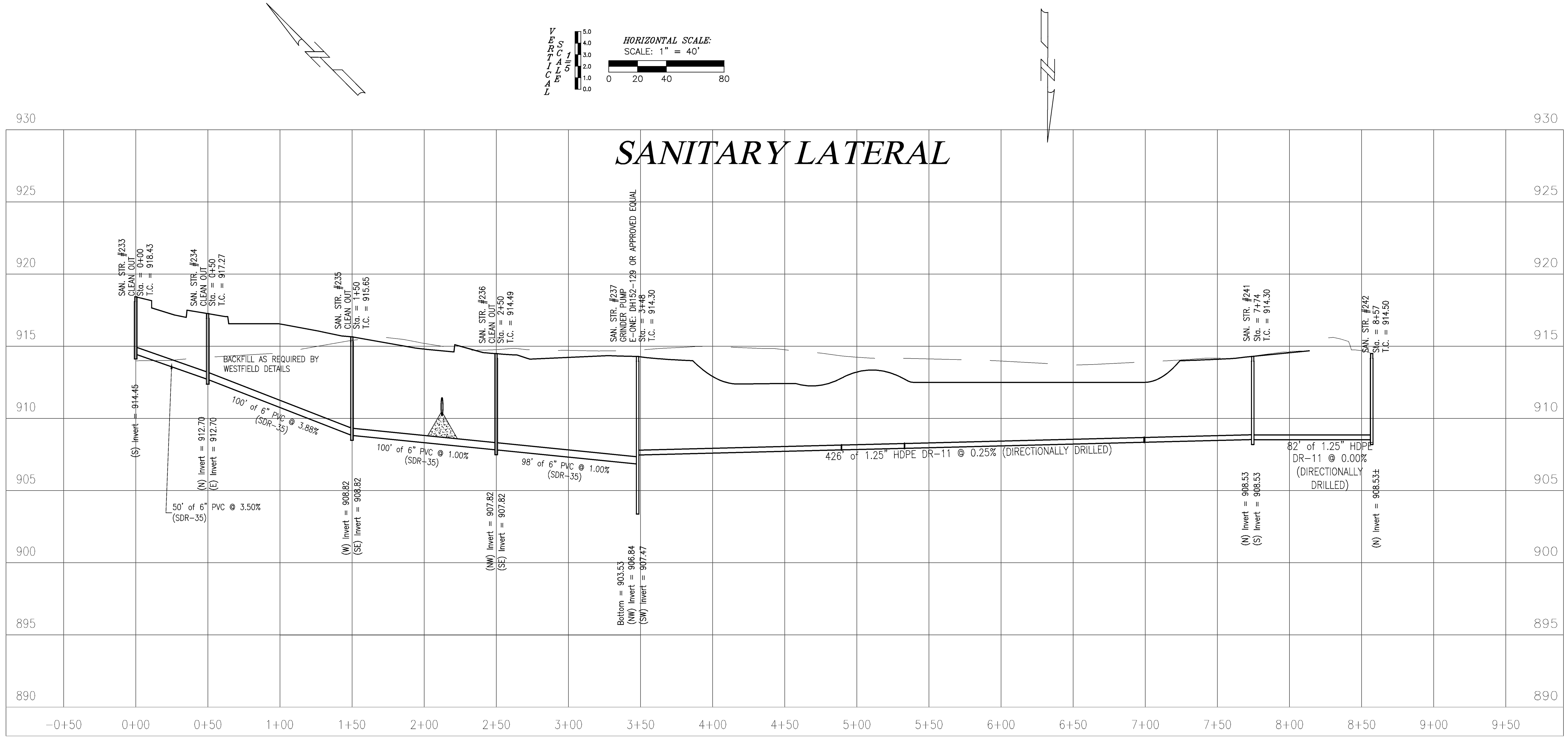

UTILITY PLAN NOTES:

1. CONNECT PROPOSED 6" SANITARY SEWER LPDM TO EXISTING SANITARY FORCEMAIN COORDINATE CONNECTION WITH MEP. PROVIDE CLEANOUTS AS REQUIRED/SHOWN. VERIFY INVERTS ON EXISTING LINE AND COORDINATE CONDITIONS WITH MEP. ADJUST AS REQUIRED
2. PROPOSED SANITARY LATERAL CLEANOUT. REFER TO DETAIL ON SHEET C201
3. PROVIDE 18" MINIMUM VERTICAL CLEARANCE BETWEEN SANITARY/STORM SEWER PIPES AND ALL OTHER PIPES. INSTALL CONCRETE CRADLE IF CLEARANCE IS LESS THAN 18"
4. CONTRACTOR SHALL INSTALL A RECEIVING PIT ON EACH SIDE OF 156TH STREET
5. CONTRACTOR SHALL JACK AND BORE UNDER 156 STREET TO RECEIVING PIT NO OPEN CUT WILL BE ALLOWED
6. CONTRACTOR SHALL LOCATE ALL EXISTING UTILITIES WITHIN THE RIGHT OF WAY BEFORE BORING
7. ALL SANITARY SEWER LATERALS MUST HAVE LOCATION WIRE RUN WHEN INSTALLING LINE.
8. SANITARY SEWER MUST BE INSTALLED OUTSIDE OF 50' OF WATER WELLS.

-CONTRACTOR'S NOTES-

1. LPGPS TO BE DIRECTIONALLY DRILLED
2. INSTALL LPGPS WITH TWO (2) #10 TRACER WIRE PER SPECS ON SHEET C302
3. SEWER TO BE PRIVATE. MAINTENANCE IS TO BE BY THE CHURCH.

-SANITARY SEWER DATA-

1. GRINDER PUMP STATION WILL HANDLE UP TO 370 SANCTUARY SEATS (1850 GPD).
2. AN GRINDER PUMP UPGRADE WILL BE REQUIRED IF CHURCH IS EXPANDED PRIOR TO THE GRAVITY SEWER PROJECT

-NOTE-

RUN WATER LINE A MINIMUM OF 54" DEEP. PROVIDE MINIMUM OF 10' HORIZONTAL & 2' VERTICAL CLEARANCE BETWEEN WATER & SANITARY LINE. SANITARY SEWER LINE IN PROXIMITY OF WATER LINE SHALL BE C900 WATER MAIN GRADE PVC.

811 Know what's below. Call before you dig.

Within Indiana Call
811 or 800-382-5544
24 Hours a Day, 7 Days a Week.

PER INDIANA STATE LAW IC 8-1-26. IT IS AGAINST THE LAW TO EXCAVATE WITHOUT NOTIFYING THE UNDERGROUND LOCATION SERVICE TWO (2) WORKING DAYS BEFORE COMMENCING WORK.

PRELIMINARY CONSTRUCTION PLANS

WEIHE ENGINEERS
Land Surveying | Civil Engineering
Landscape Architecture
10505 N. College Avenue
Indianapolis, Indiana 46280
weihe.net
317 | 846 - 6611
800 | 452 - 6408
317 | 843 - 0546 fax
ALLAN H. WEIHE, P.E., L.S. - FOUNDER

PROJECT NO.: W12.0262
DWG NAME: 120262-C107 pnp.dwg
DESIGNED BY: EAC/MG
DRAWN BY: EAC/MG
CHECKED BY: JKS
DATE: 06.29.2012

DATE	BY	REVISIONS AND ISSUES

JAMES K. SHINNEMAN REGISTERED NO. 10200392 STATE OF INDIANA PROFESSIONAL ENGINEER
NOT FOR CONSTRUCTION — APPROVAL PENDING

JAMES K. SHINNEMAN P.E. 10200392

PREPARED FOR:
EPIPHANY EVANGELICAL LUTHERAN CHURCH PHASE ONE
156TH AND DITCH ROAD, WESTFIELD IN

SANITARY SEWER PLAN AND PROFILE
Part of the SE Corner of SW/1/4 of Section 10, Township 18 North, Range 3 East, Washington Township, Hamilton County, Indiana

SHEET NO. C109
PROJECT NO. W12.0262

LOCATION: H:\2012\w120262\Engineering\design\conset\120262-C107 pnp.dwg
LAYOUT: C109-SANITARY PNP
DATE/TIME: June 29, 2012 - 7:59am
PLOTTED BY: cartere

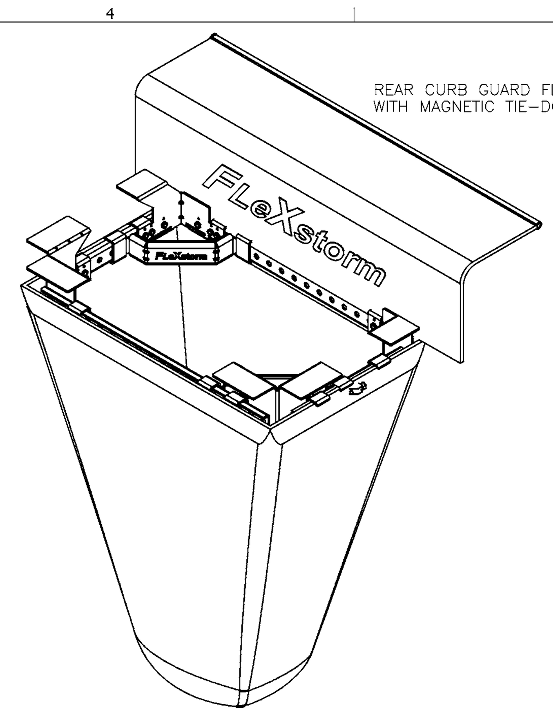

TYPICAL CURB BOX INLET FILTER

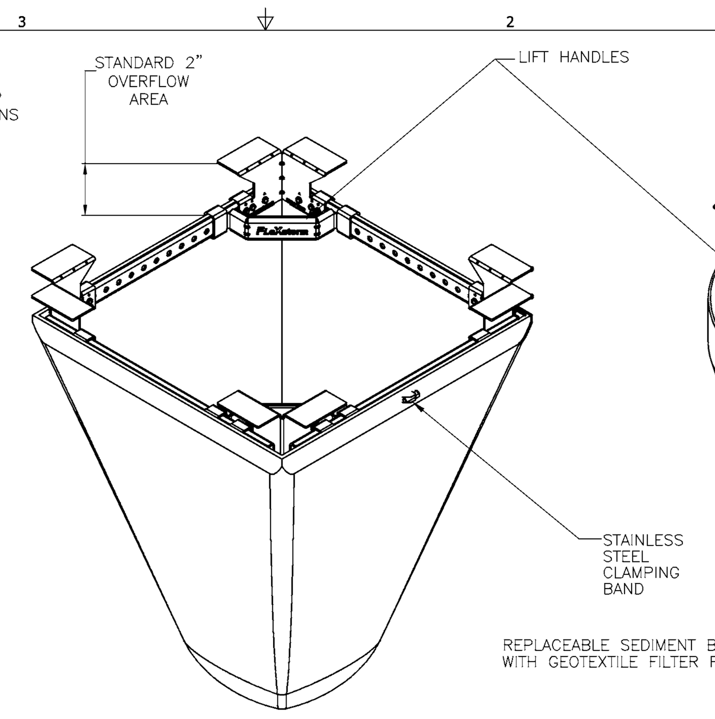

TYPICAL FLAT/RECTANGULAR/ROLLED CURB INLET FILTER

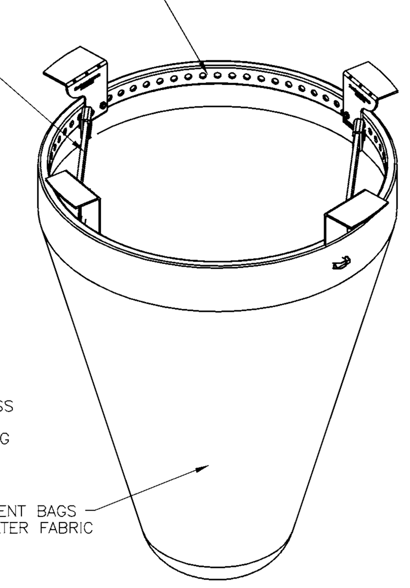

TYPICAL ROUND INLET FILTER

FLEXSTORM Inlet Filter Specifications		
WOVEN Geotextile Sediment Bag Specs (2 ft^3 vol)		
Material Property	Test Method	Value (ave)
Grab Tensile	ASTM D 4632	255 x 275
Puncture Strength	ASTM D 4833	135 lbs
Trapezoidal Tear	ASTM D 4533	75 lbs
UV Resistance	ASTM D 4355	90%
App Open Size (AOS)	ASTM D 4751	20 sieve
Permittivity	ASTM D 4491	1.5 / sec
Water Flow Rate	ASTM D 4491	200 gpm/sqft
Sediment Removal Efficiency (8% mix)	ASTM D 7351	82%

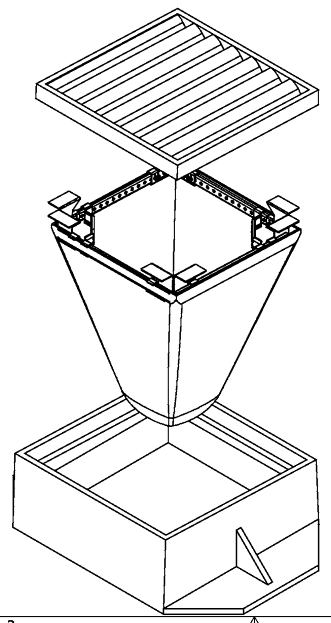

INSTALLATION:
1. REMOVE GRATE
2. DROP FLEXSTORM INLET FILTER ONTO LOAD BEARING LIP OF CASTING OR CONCRETE STRUCTURE
3. REPLACE GRATE

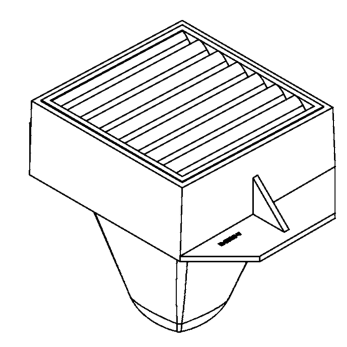

DRAWN IPP	ALL PRODUCTS MANUFACTURED BY INLET & PIPE PROTECTION, INC DISTRIBUTED BY ADS WWW.INLETFILTERS.COM (866) 287-8655 PH (630) 355-3477 FX INFO@INLETFILTERS.COM
CHECKED	
QA	
MFG	
APPROVED	
SIZE C	DWG NO FLEXSTORM_SPECS REV
SCALE	SHEET 1 OF 1

DANDY BAG
INSTALLATION AND MAINTENANCE
GUIDELINES

INSTALLATION: REMOVE THE GRATE FROM CATCH BASIN. IF USING OPTIONAL OIL ABSORBENTS; PLACE ABSORBENT PILLOW IN UNIT. STAND THE GRATE ON END. MOVE THE TOP LIFTING STRAPS OUT OF THE WAY AND PLACE THE GRATE INTO THE DANDY BAG®II SO THAT THE GRATE IS BELOW THE TOP STRAPS AND ABOVE THE LOWER STRAPS. HOLDING THE LIFTING DEVICES, INSERT THE GRATE INTO THE INLET.

MAINTENANCE: REMOVE ALL ACCUMULATED SEDIMENT AND DEBRIS FROM VICINITY OF UNIT AFTER EACH STORM EVENT. AFTER EACH STORM EVENT AND AT REGULAR INTERVALS, LOOK INTO THE DANDY BAG II. IF THE CONTAINMENT AREA IS MORE THAN 1/3 FULL OF SEDIMENT, THE UNIT MUST BE EMPTIED. TO EMPTY UNIT, LIFT THE UNIT OUT OF THE INLET USING THE LIFTING STRAPS AND REMOVE THE GRATE. IF USING OPTIONAL OIL ABSORBENTS; REPLACE ABSORBENT WHEN NEAR SATURATION.

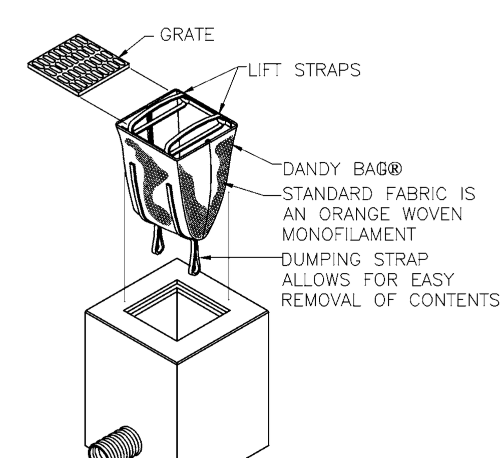

DROP INLET CURB PROTECTION

DETAIL PROVIDED BY DANDY BAG (NO SCALE)

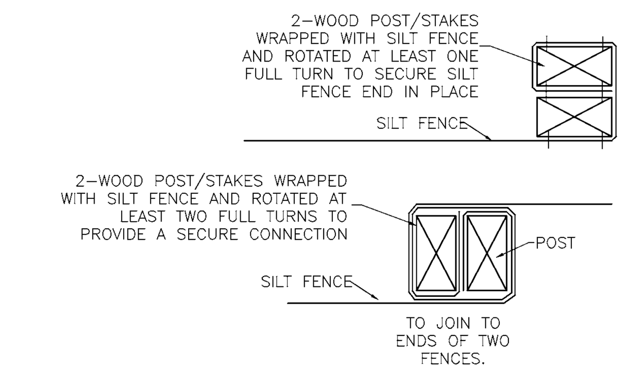

MAXIMUM LOAD SLOPE AND DISTANCE FOR WHICH A SILT FENCE IS APPLICABLE

LOAD SLOPE	MAX. DISTANCE ABOVE FENCE
LESS THAN 2%	100 FT.
2 TO 5%	75 FT.
5 TO 10%	50 FT.
10 TO 20%	25 FT.
MORE THAN 20%	15 FT.

POSTS: STEEL T OR U TYPE, OR 2"X2" HARD WOOD POST
FENCE: WOVEN WIRE, 14-1/2 GA., 6" MAX. MESH OPENING
FABRIC: IN ACCORDANCE WITH ASTM D 6461 LATEST EDITION.

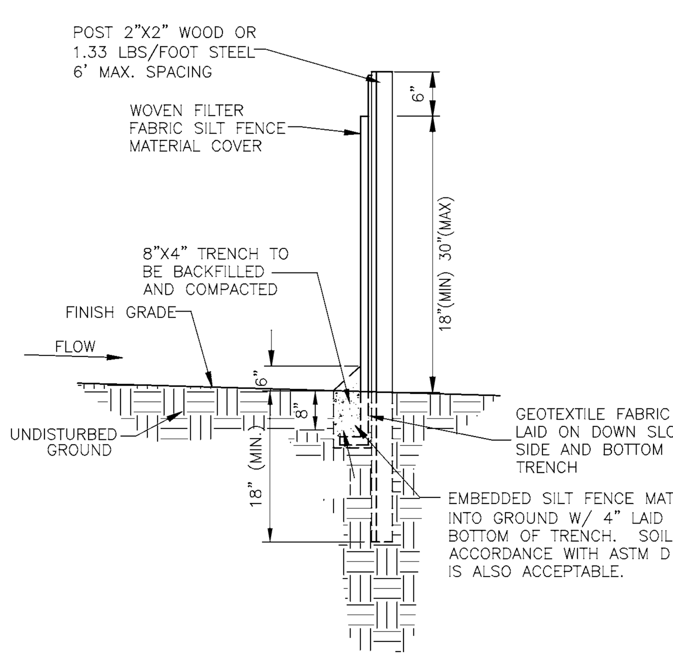

WITHOUT WIRE SUPPORT

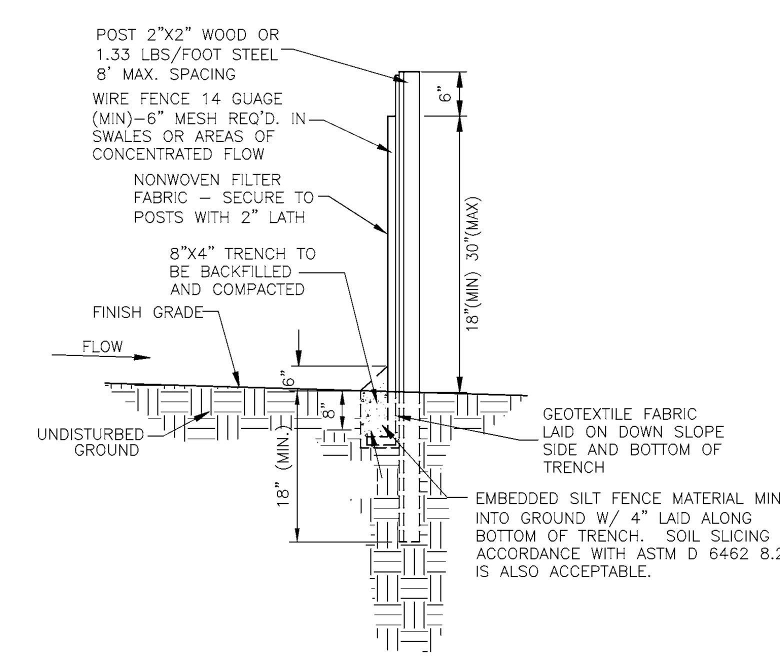

WITH WIRE SUPPORT

INSTALLATION
PREFABRICATED SILT FENCE
1. LAY OUT THE LOCATION OF THE FENCE SO THAT IT IS PARALLEL TO THE CONTOUR OF THE SLOPE AND AT LEAST 10 FEET BEYOND THE TOE OF THE SLOPE TO PROVIDE A SEDIMENT STORAGE AREA. TURN THE ENDS OF THE FENCE UP SLOPE SUCH THAT THE POINT OF CONTACT BETWEEN THE GROUND AND THE BOTTOM OF THE FENCE END TERMINATES AT A HIGHER ELEVATION THAN THE TOP OF THE FENCE AT ITS LOWEST POINT.
2. EXCAVATE AN EIGHT-INCH DEEP BY FOUR-INCH WIDE TRENCH ALONG THE ENTIRE LENGTH OF THE FENCE LINE. INSTALLATION BY PLOWING IS ALSO ACCEPTABLE.
3. INSTALL THE SILT FENCE WITH THE FILTER FABRIC LOCATED ON THE UP-SLOPE SIDE OF THE EXCAVATED TRENCH AND THE SUPPORT POSTS ON THE DOWN-SLOPE SIDE OF THE TRENCH.
4. DRIVE THE SUPPORT POSTS AT LEAST 18 INCHES INTO THE GROUND, TIGHTLY STRETCHING THE FABRIC BETWEEN THE POSTS AS EACH IS DRIVEN INTO THE SOIL. MINIMUM OF 12 INCHES OF THE FILTER FABRIC SHOULD EXTEND INTO THE TRENCH.
5. LAY THE LOWER FOUR INCHES OF FILTER FABRIC ON THE BOTTOM OF THE TRENCH AND EXTEND IT TOWARD THE UP-SLOPE SIDE OF THE TRENCH.
6. BACKFILL THE TRENCH WITH SOIL MATERIAL AND COMPACT IT IN PLACE.

NOTE: IF THE SILT FENCE IS BEING CONSTRUCTED ON-SITE, ATTACH THE FILTER FABRIC TO THE SUPPORT POSTS AND ATTACH WOODEN LATHE TO SECURE THE FABRIC TO THE POSTS. ALLOW FOR AT LEAST 12 INCHES OF FABRIC BELOW GROUND LEVEL. COMPLETE THE SILT FENCE INSTALLATION, FOLLOWINGSTEPS 1 THROUGH 6 ABOVE.

MAINTENANCE
_ INSPECT WITHIN 24 HOURS OF A RAIN EVENT AND AT LEAST ONCE EVERY SEVEN CALENDAR DAYS.
_ IF FENCE FABRIC TEARS, STARTS TO DECOMPOSE, OR IN ANY WAY BECOMES INEFFECTIVE, REPLACE THE AFFECTED PORTION IMMEDIATELY. NOTE: ALL REPAIRS SHOULD MEET SPECIFICATIONS AS OUTLINED WITHIN THIS MEASURE.
_ REMOVE DEPOSITED SEDIMENT WHEN IT IS CAUSING THE FILTER FABRIC TO BULGE OR WHEN IT REACHES ONE-HALF THE HEIGHT OF THE FENCE AT ITS LOWEST POINT. WHEN CONTRIBUTING DRAINAGE AREA HAS BEEN STABILIZED, REMOVE THE FENCE AND SEDIMENT DEPOSITS, GRADE THE SITE TO BLEND WITH THE SURROUNDING AREA, AND STABILIZE.

REFFERENCE IN CHAPTER 7 PAGES 215-221 IN THE INDIANA STORM WATER QUALITY MANUAL

SEDIMENTATION/SILT FENCE

(NO SCALE)

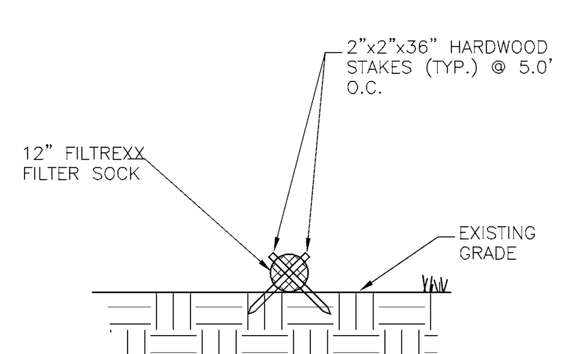

COIR LOG (FIBER ROLL)

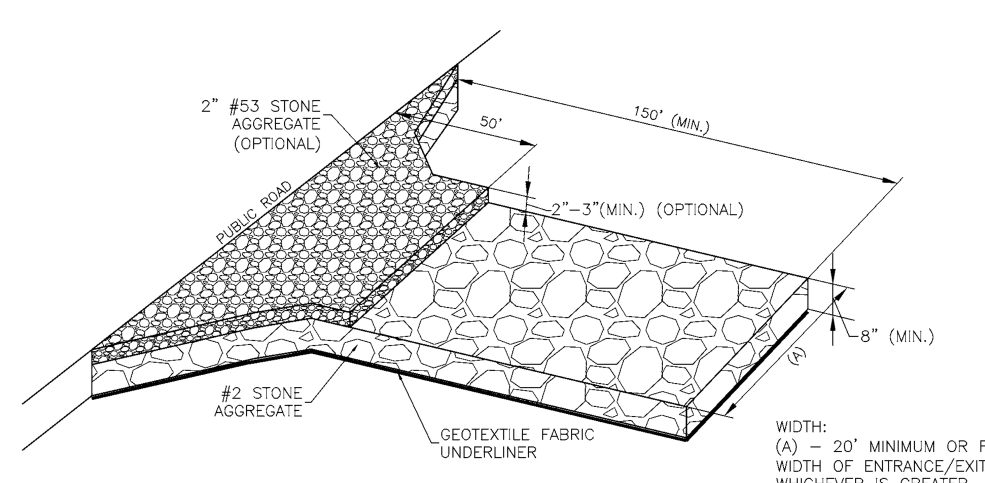

WIDTH:
(A) - 20' MINIMUM OR FULL WIDTH OF ENTRANCE/EXIT DRIVE, WHICHEVER IS GREATER.

INSTALLATION:
1. REMOVE ALL VEGETATION AND OTHER OBJECTIONABLE MATERIAL FROM THE FOUNDATION AREA.
2. GRADE FOUNDATION AND CROWN FOR POSITIVE DRAINAGE. IF THE SLOPE OF THE CONSTRUCTION ENTRANCE IS TOWARD A PUBLIC ROAD AND EXCEEDS TWO PERCENT, CONSTRUCT AN EIGHT INCH HIGH DIVERSION RIDGE WITH A RATIO OF 3-TO-1 SIDE SLOPES ACROSS THE FOUNDATION AREA ABOUT 15 FEET FROM THE ENTRANCE TO DIVERT RUNOFF AWAY FROM THE ROAD.
3. INSTALL A CULVERT PIPE UNDER THE PAD IF NEEDED TO MAINTAIN PROPER PUBLIC ROAD DRAINAGE.
4. IF WET CONDITIONS ARE ANTICIPATED, PLACE GEOTEXTILE FABRIC ON THE GRADED FOUNDATION TO IMPROVE STABILITY.
5. PLACE AGGREGATE (INDOT CA NO. 2) TO THE DIMENSIONS AND GRADE SHOWN IN THE CONSTRUCTION PLANS, LEAVING THE SURFACE SMOOTH AND SLOPED FOR DRAINAGE.
6. TOP-DRESS THE FIRST 50 FEET ADJACENT TO THE PUBLIC ROADWAY WITH TWO TO THREE INCHES OF WASHED AGGREGATE (INDOT CA NO. 53) [OPTIONAL, USED PRIMARILY WHERE THE PURPOSE OF THE PAD IS TO KEEP SOIL FROM ADHERING TO VEHICLE TIRES].
7. WHERE POSSIBLE, DIVERT ALL STORM WATER RUNOFF AND DRAINAGE FROM THE INGRESS/EGRESS PAD TO A SEDIMENT TRAP OR BASIN.

MAINTENANCE:
_ INSPECT DAILY.
_ RESHAPE PAD AS NEEDED FOR DRAINAGE AND RUNOFF CONTROL.
_ TOP DRESS WITH CLEAN AGGREGATE AS NEEDED.
_ IMMEDIATELY REMOVE MUD AND SEDIMENT TRACKED OR WASHED ONTO PUBLIC ROADS.
_ FLUSHING SHOULD ONLY BE USED IF THE WATER CAN BE CONVEYED INTO A SEDIMENT TRAP OR BASIN.

REFRENCED IN CHAPTER 7 PAGE 17-20 IN INIANA STORM WATER QUALITY MANUAL.

TEMPORARY CONSTRUCTION INGRESS/EGRESS PAD

LARGE SITES - TWO ACRES OR LARGER (NO SCALE)

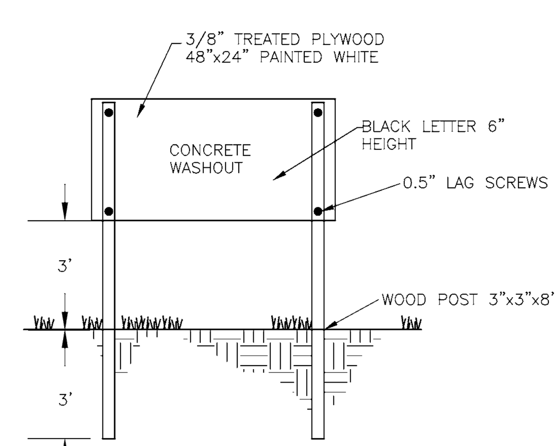

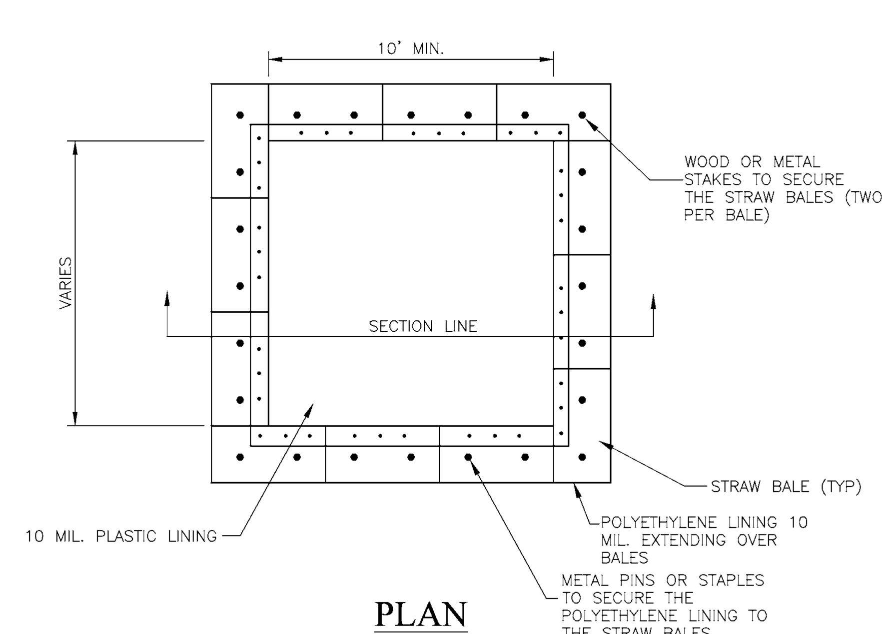

PLAN

NOTES:
1. ACTUAL LAYOUT DETERMINED IN FIELD.
2. THE CONCRETE WASHOUT SIGN SHALL BE INSTALLED WITHIN 30FT. OF THE TEMP. CONCRETE WASHOUT FACILITY

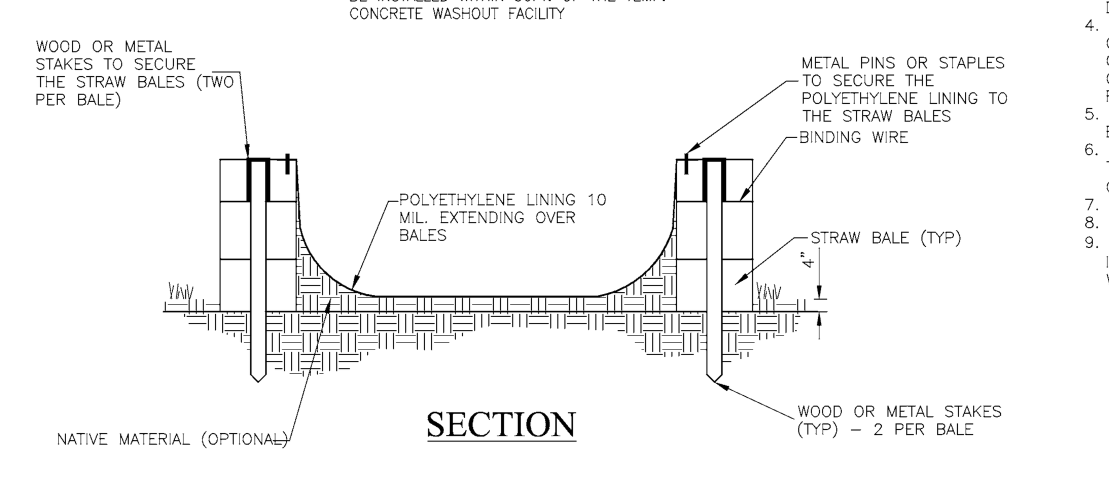

SECTION

INSTALLATION
1. UTILIZE AND FOLLOW THE DESIGN IN THE STORM WATER POLLUTION PREVENTION PLAN TO INSTALL THE SYSTEM.
2. DEPENDENT UPON THE TYPE OF SYSTEM, EITHER EXCAVATE THE PIT OR INSTALL THE CONTAINMENT SYSTEM.
3. A BASE SHALL BE CONSTRUCTED AND PREPARED THAT IS FREE OF ROCKS AND OTHER DEBRIS THAT MAY CAUSE TEARS OR PUNCTURES IN THE POLYETHYLENE LINING.
4. INSTALL THE POLYETHYLENE LINING. FOR EXCAVATED SYSTEMS, THE LINING SHOULD EXTEND OVER THE ENTIRE EXCAVATION. THE LINING FOR BERMED SYSTEMS SHOULD BE INSTALLED OVER THE POOLING AREA WITH ENOUGH MATERIAL TO EXTEND THE LINING OVER THE BERM OR CONTAINMENT SYSTEM. THE LINING SHOULD BE SECURED WITH PINS, STAPLES, OR OTHER FASTENERS.
5. PLACE FLAGS, SAFETY FENCING, OR EQUIVALENT TO PROVIDE A BARRIER TO CONSTRUCTION EQUIPMENT AND OTHER TRAFFIC.
6. PLACE A NON-COLLAPSING, NON-WATER HOLDING COVER OVER THE WASHOUT FACILITY PRIOR TO A PREDICTED RAINFALL EVENT TO PREVENT ACCUMULATION OF WATER AND POSSIBLE OVERFLOW OF THE SYSTEM (OPTIONAL).
7. INSTALL SIGNAGE THAT IDENTIFIES CONCRETE WASHOUT AREAS.
8. POST SIGNS DIRECTING CONTRACTORS AND SUPPLIERS TO DESIGNATED LOCATIONS.
9. WHERE NECESSARY, PROVIDE STABLE INGRESS AND EGRESS (SEE TEMPORARY CONSTRUCTION INGRESS/EGRESS PAD ON PAGE 17) OR ALTERNATIVE APPROACH PAD FOR CONCRETE WASHOUT SYSTEMS.

CONCRETE WASHOUT

TYPE "ABOVE GRADE W/ STRAW BALES" (NO SCALE)

Know what's **below.** **Call** before you dig.

Within Indiana Call
811 or 800-382-5544
24 Hours a Day, 7 Days a Week.

PER INDIANA STATE LAW IC 8-1-26. IT IS AGAINST THE LAW TO EXCAVATE WITHOUT NOTIFYING THE UNDERGROUND LOCATION SERVICE TWO (2) WORKING DAYS BEFORE COMMENCING WORK.

PRELIMINARY CONSTRUCTION PLANS

10505 N. College Avenue
Indianapolis, Indiana 46280
weihe.net
317 | 846 - 6611
800 | 452 - 6408
317 | 843 - 0546 *fax*
ALLAN H. WEIHE, P.E., L.S. - FOUNDER

WEIHE ENGINEERS
Land Surveying | Civil Engineering
Landscape Architecture

PROJECT NO.: W12.0262
DWG NAME: 120262-C201 det.dwg
DESIGNED BY: EAC/MG
DRAWN BY: EAC/MG
CHECKED BY: JKS
DATE: 06.29.2012

DATE	BY	REVISIONS AND ISSUES

JAMES K. SHINNEMAN REGISTERED NO. 10200392 STATE OF INDIANA PROFESSIONAL ENGINEER
APPROVAL PENDING NOT FOR CONSTRUCTION

JAMES K. SHINNEMAN P.E. 10200392

PREPARED FOR:
EPIPHANY EVANGELICAL LUTHERAN CHURCH PHASE ONE
156TH AND DITCH ROAD, WESTFIELD IN

SWPPP (PHASE I) DETAILS

Part of the SE Corner of SW/1/4 of Section 10, Township 18 North, Range 3 East, Washington Township, Hamilton County, Indiana

SHEET NO. C201

PROJECT NO. W12.0262

LOCATION: H:\2012\w120262\Engineering\design\conset\120262-C201 det.dwg
LAYOUT: C201 - SWPPP 1 DETAILS
DATE/TIME: June 29, 2012 - 8:00am
PLOTTED BY: cartere

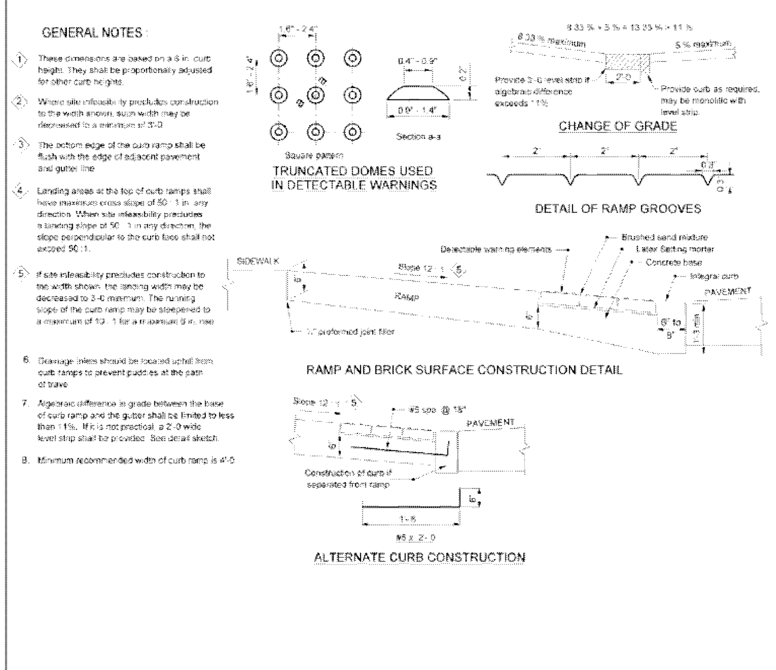

SIDEWALK RAMP FOR HANDICAPPED

TOWN OF WESTFIELD, INDIANA

Renée Lynn Goff 10/9/06 DATE FIGURE P-11

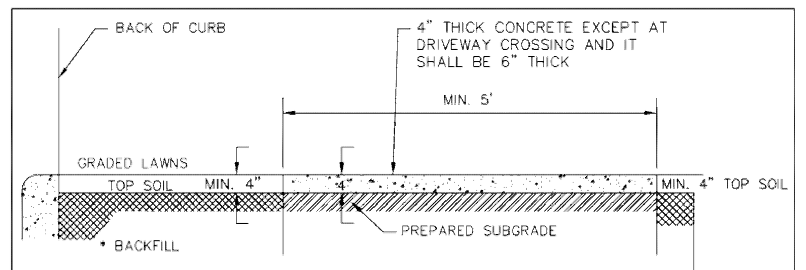

TYPICAL SIDEWALK SECTION
NOT TO SCALE

* THE SPACE BEHIND THE CURB SHALL BE FILLED WITH SUITABLE MATERIAL TO THE REQUIRED ELEVATION AND COMPACTED IN LAYERS NOT TO EXCEED 6" IN DEPTH.

SUBGRADE UNDER ALL CURBS, SIDEWALKS, AND DRIVES SHALL BE COMPACTED IN ACCORDANCE WITH I.N.D.O.T. SPECIFICATIONS.

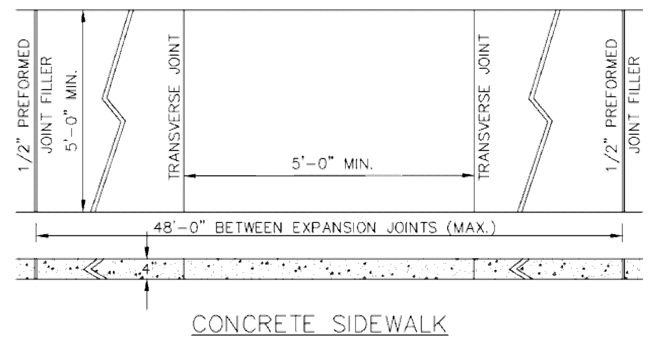

CONCRETE SIDEWALK
NOT TO SCALE

SIDEWALK DETAILS

TOWN OF WESTFIELD, INDIANA

Renée Lynn Goff 10/9/06 DATE FIGURE P-10

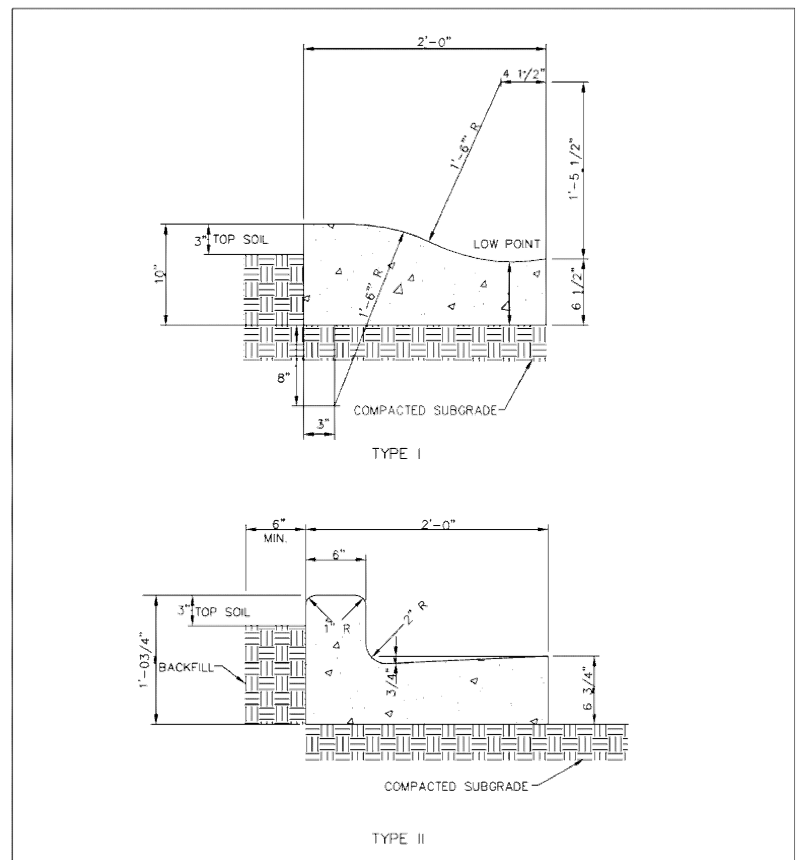

CONCRETE CURB AND GUTTER TYPE I & II

TOWN OF WESTFIELD, INDIANA

Renée Lynn Goff 10/9/06 DATE FIGURE P-8

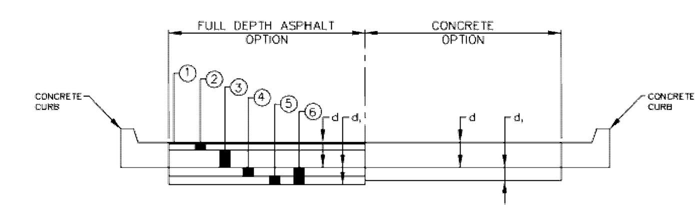

INDUSTRIAL AND ARTERIAL

	ASPHALT ($d+d_1=9"+9"=18"$)	ASPHALT ALTERNATIVE ($d+d_1=9"+18"=27"$)	CONCRETE
1	1" SURFACE #11 OR #12	1" SURFACE #11 OR #12	d=8" CONCRETE
2	2" BINDER #9	2" BINDER #9	d =6" COMP. AGGR. (SIZE 53)
3	6" BASE #5D	6" BASE #5D	
4	N.A.	N.A.	
5	N.A.	6" COMP. AGGR. SIZE No 53	
6	9" COMP. AGGR. (SIZE No. 53)	12" LIME TREATED * SUBBASE	

* LIME MODIFICATION SHALL BE BETWEEN 3% AND 6% BY WEIGHT WITH THE SOIL TEMPERATURE 45° OR ABOVE MEASURED 4"(100mm) BELOW THE SUBGRADE SURFACE WITH THE AIR TEMPERATURE RISING, ALL IN ACCORDANCE WITH THE LATEST AMENDED VERSION OF THE INDIANA DEPARTMENT OF TRANSPORTATION'S SPECIAL PROVISION FOR LIME MODIFICATION.

NOTE: * DEPTH OF CONCRETE GUTTER SHALL EQUAL DEPTH OF CONCRETE PAVEMENT.

TYPICAL PAVEMENT SECTIONS

TOWN OF WESTFIELD, INDIANA

Renée Lynn Goff 10/9/06 DATE FIGURE P-3

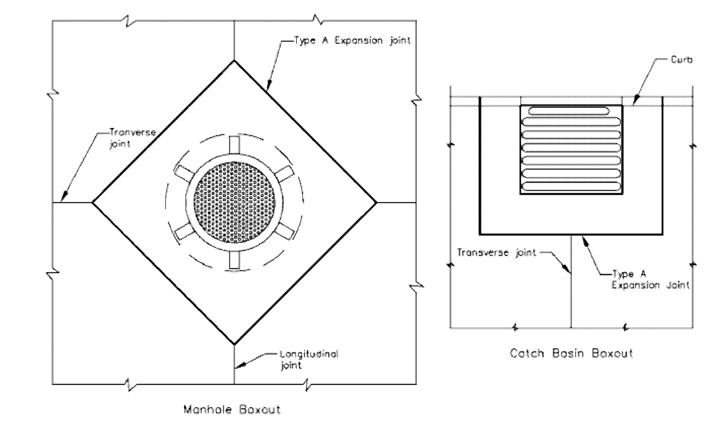

1. All catch basins shall be separated from the pavement and curb by boxing out around basin as shown above. Expansion joint material shall extend completely through curb and slab. Manhole castings within the pavement limits shall be boxed in like manner except when telescoping-type castings are used.
2. When a joint falls within 5 ft. of or contacts basins, manholes, or other structures, shorten one or more panels either side of opening to permit joint to fall on round structures and at or between corners of rectangular structures.

STRUCTURE DETAILS

TOWN OF WESTFIELD, INDIANA

Renée Lynn Goff 10/9/06 DATE FIGURE P-6

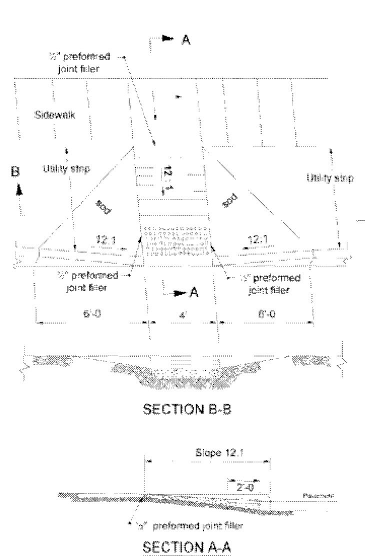

SIDEWALK RAMP FOR HANDICAPPED

TOWN OF WESTFIELD, INDIANA

Renée Lynn Goff 10/9/06 DATE FIGURE P-11A

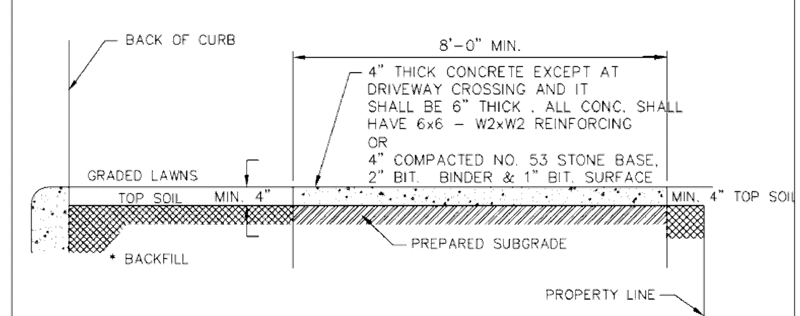

TYPICAL PATH SECTION
NOT TO SCALE

* THE SPACE BEHIND THE CURB SHALL BE FILLED WITH SUITABLE MATERIAL TO THE REQUIRED ELEVATION AND COMPACTED IN LAYERS NOT TO EXCEED 6" IN DEPTH.

SUBGRADE UNDER ALL CURBS, SIDEWALKS, PATHS AND DRIVES SHALL BE COMPACTED IN ACCORDANCE WITH I.N.D.O.T. SPECIFICATIONS.

SEE SECTION 02502 (STANDARDS FOR ROADWAY CONSTRUCTION) FOR DETAILED DISCRIPTION OF BICYCLE/JOGGING PATH CONSTRUCTION

BICYCLE/JOGGING PATH DETAIL

TOWN OF WESTFIELD, INDIANA

Renée Lynn Goff 10/9/06 DATE FIGURE P-16

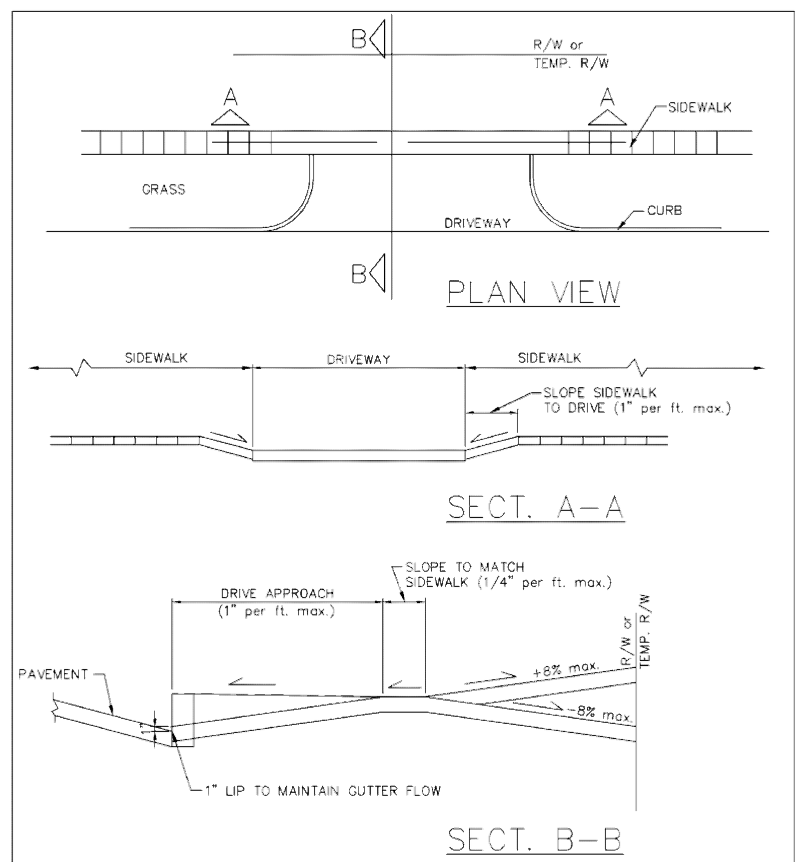

TYPICAL DRIVEWAY SECTION

TOWN OF WESTFIELD, INDIANA

Renée Lynn Goff 10/9/06 DATE FIGURE P-17

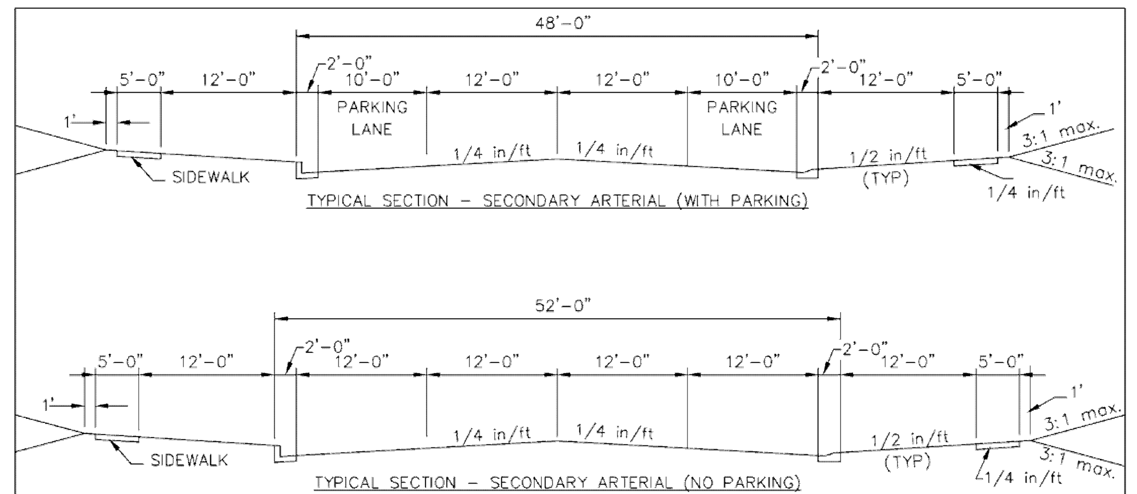

NOTES:
1. The curb & gutter shall be Type I or Type II as shown on the Curb & Gutter standard sheets. Type II curb & gutter shall be used adjacent to, and in, non-residential or multi-family residential areas and on entrances of residential development along thoroughfares.
2. For curb and gutter detail, see figure P-8
3. For minimum Right of Way requirements, see figures G-14 and G-14.1

TOWN OF WESTFIELD, INDIANA

Renée Lynn Goff 10/9/06 DATE FIGURE G-03

NOTE: ALL PAINT TO BE NON-SKID SURFACE APPLICATION OF CILICA SAND OR GLASS BEAD BY METHOD OF MIXTURE AND OR BROADCASTING.

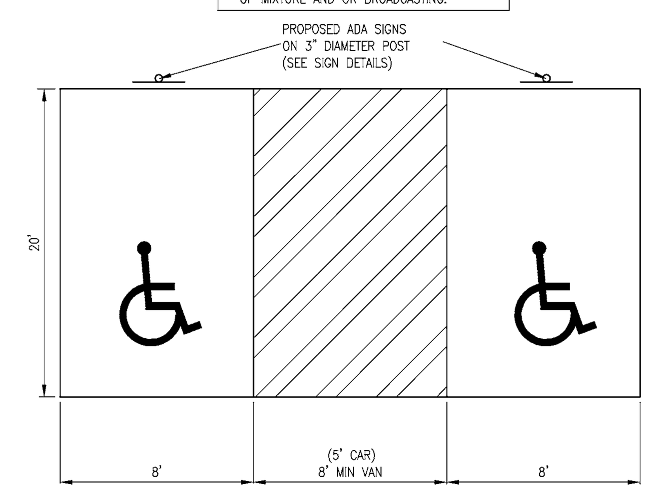

"ADA" PARKING SPACES
(NO SCALE)

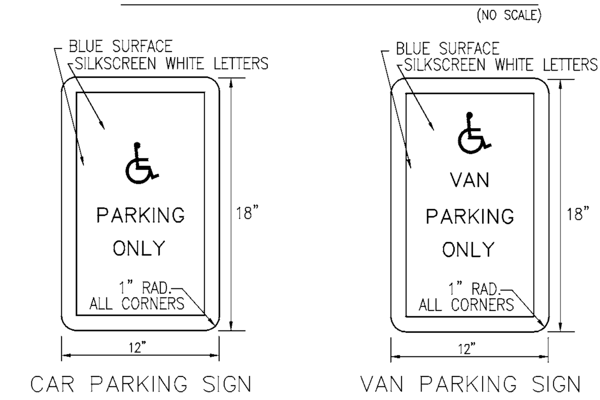

NOTE: 12"X18" 18 GAUGE HOT DIP GALVANIZED NON-REFLECTIVE SIGN WITH 12' POST DRIVEN 4 FEET INTO GROUND. POST SHALL BE 12' LONG GALVANIZED 2 1/2" OD STEEL POSTS PAINTED GREEN TO MATCH LIGHT POLES SET BOTTOM OF SIGN 7' ABOVE GRADE

"ADA" SIGNS
(NO SCALE)

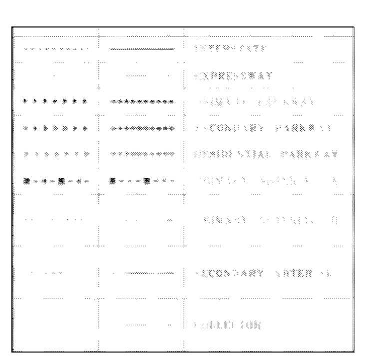

CLASSIFICATION		MINIMUM RIGHT OF WAY AT ITNERSCTION	AT THOUGH LANES
INTERSTATE		VARIES	VARIES
EXPRESSWAY		VARIES	VARIES
PRIMARY PARKWAY	WITH PATHS	160'	140'
SECONDARY PARKWAY	WITH PATHS	150'	120'
RESIDENTIAL PARKWAY	WITH PATHS	130'	100'
PRIMARY ARTERIAL "A"	WITH PATHS	170'	150'
PRIMARY ARTERIAL "B"	WITH MULTI-USE PATHS WITH FULL SEPERATION	150'	130'
	WITHOUT MULTI-USE PATHS	140'	120'
SECONDARY ARTERIAL	WITH MULTI-USE PATHS WITH FULL SEPERATION	150'	120'
	WITHOUT MULTI-USE PATHS	120'	90'
COLLECTOR	WITH MULTI-USE PATHS WITH FULL SEPERATION	130'	100'
	WITHOUT MULTI-USE PATHS	120'	80'

TOWN OF WESTFIELD, INDIANA

Renée Lynn Goff 10/9/06 DATE FIGURE G-14.1

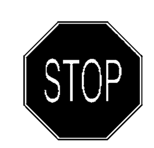

NOTE:
SIGN IS TO BE MOUNTED ON GALVANIZED STEEL U-POST AND MEET IN.D.O.T. AND INDIANA MANUAL ON UNIFORM TRAFFIC CONTROL DEVICES FOR STREETS AND HIGHWAYS.

STOP SIGN (24" x 24")
(NO SCALE)

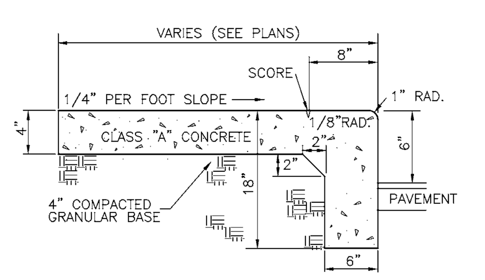

INTEGRAL WALK AND CURB DETAIL
(NO SCALE)

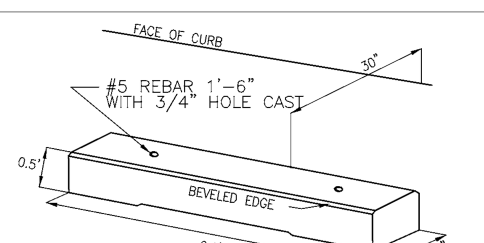

PRECAST CONC. PARKING BARRIER WITH 2-#3 REBARS USE 4000 PSI CONC.

PARKING BARRIER
(NO SCALE)

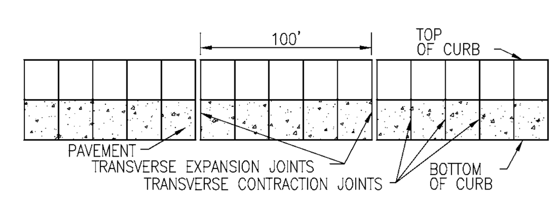

CURB JOINT DETAIL
(NO SCALE)

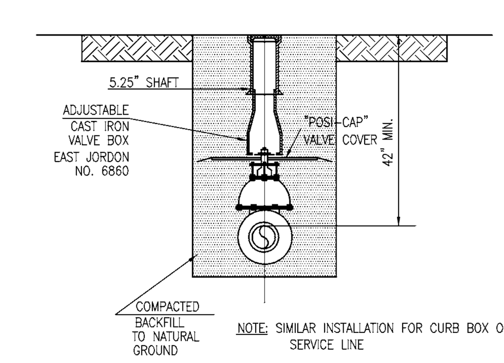

TYPICAL VALVE BOX INSTALLATION
(NO SCALE)

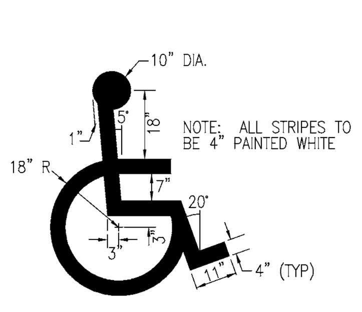

"ADA" PARKING SYMBOL DETAIL
(NO SCALE)

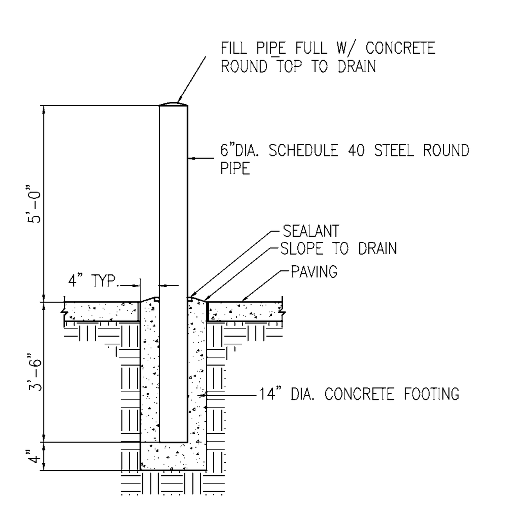

PIPE BOLLARD DETAIL
(NO SCALE)

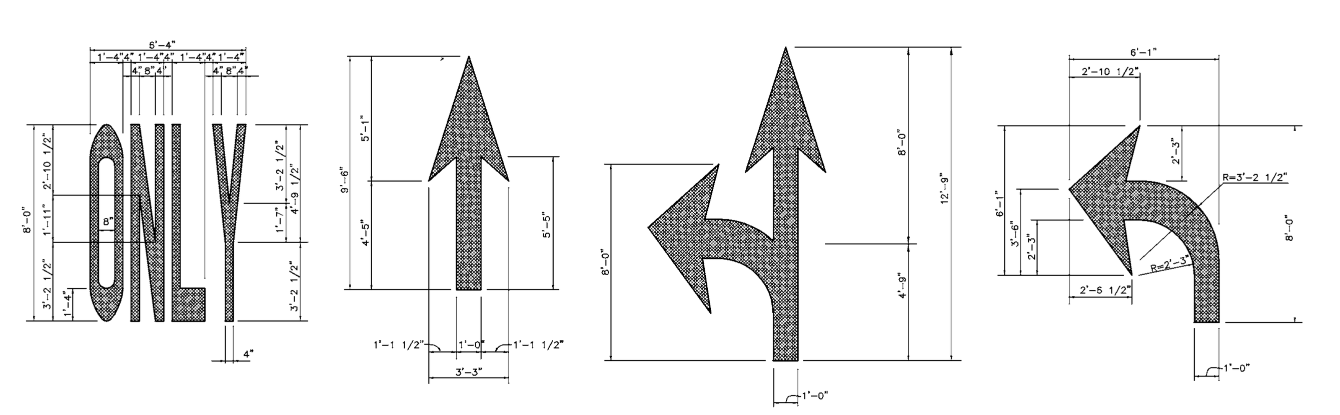

NOTE:
LANE CONTROL ARROWS SHALL BE WHITE AND SHALL BE PLACED IN ACCORDANCE WITH IMUTCD. THE ARROW SHOULD BE 20 FEET IN ADVANCE OF THE STOPLINE. THE WORD "ONLY" SHOULD BE LOCATED IN ADVANCE OF THE PAVEMENT ARROW.

TRAFFIC MARKING DETAILS
(NO SCALE)

NOTE:
TYPICAL SIZES FOR NORMAL INSTALLATION; SIZES MAY BE REDUCED APPROXIMATELY ONE-THIRD FOR LOW-SPEED URBAN CONDITIONS.

ALL SIGNS SHALL COMPLY WITH U.S. DEPARTMENT OF TRANSPORTATION, FEDERAL HIGHWAY ADMINISTRATION'S "MANUAL OF UNIFORM TRAFFIC CONTROL DEVICES",LOCAL CODES AND AS SPECIFIED. MOUNT SIGNS TO POST IN ACCORDANCE WITH MANUFACTURER'S INSTRUCTIONS.

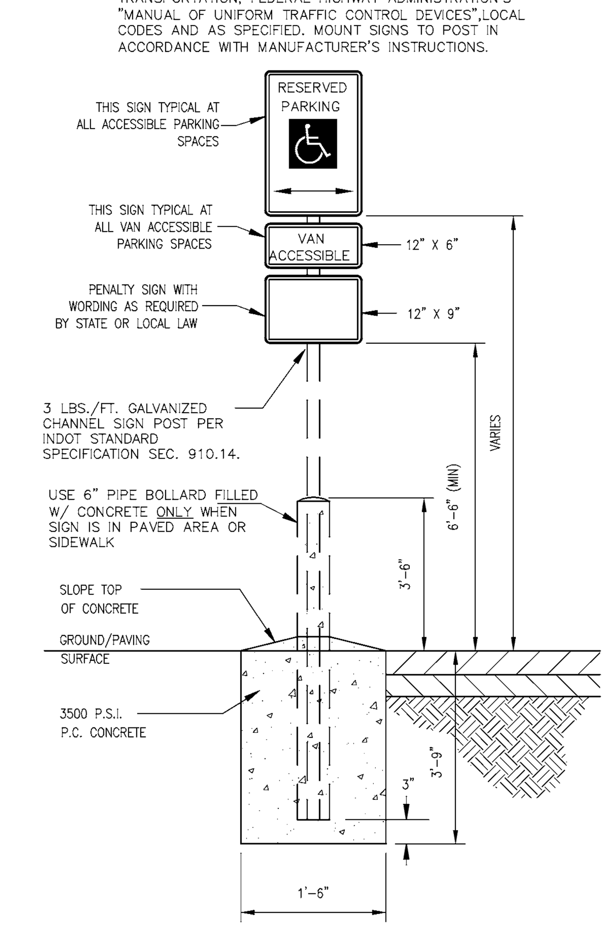

'ADA' SIGN BOLLARD MOUNT DETAIL
(NO SCALE)

Know what's below. Call before you dig.

Within Indiana Call
811 or 800-382-5544
24 Hours a Day, 7 Days a Week.

PER INDIANA STATE LAW IC 8-1-26. IT IS AGAINST THE LAW TO EXCAVATE WITHOUT NOTIFYING THE UNDERGROUND LOCATION SERVICE TWO (2) WORKING DAYS BEFORE COMMENCING WORK.

PRELIMINARY CONSTRUCTION PLANS

10505 N. College Avenue
Indianapolis, Indiana 46280
weihe.net

317 | 846 - 6611
800 | 452 - 6408
317 | 843 - 0546 fax

ALLAN H. WEIHE, P.E., L.S. - FOUNDER

WEIHE ENGINEERS
Land Surveying | Civil Engineering
Landscape Architecture

PROJECT NO.: W12.0262
DWG NAME: 120262-C201 det.dwg
DESIGNED BY: EAC/MG
DRAWN BY: EAC/MG
CHECKED BY: JKS
DATE: 06.29.2012

REVISIONS AND ISSUES	DATE	BY

JAMES K. SHINNEMAN REGISTERED NO. 10200392 STATE OF INDIANA PROFESSIONAL ENGINEER
APPROVAL PENDING NOT FOR CONSTRUCTION

JAMES K. SHINNEMAN P.E. 10200392

PREPARED FOR:
EPIPHANY EVANGELICAL LUTHERAN CHURCH PHASE ONE

156TH AND DITCH ROAD, WESTFIELD IN

SITE LAYOUT DETAILS

Part of the SE Corner of SW/1/4 of Section 10, Township 18 North, Range 3 East, Washington Township, Hamilton County, Indiana

SHEET NO.
C202

PROJECT NO.
W12.0262

LOCATION: H:\2012\w120262\Engineering\design\conset\120262-C201 det.dwg
LAYOUT: C202 – SITE DETAILS
DATE/TIME: June 29, 2012 – 8:00am
PLOTTED BY: cartere

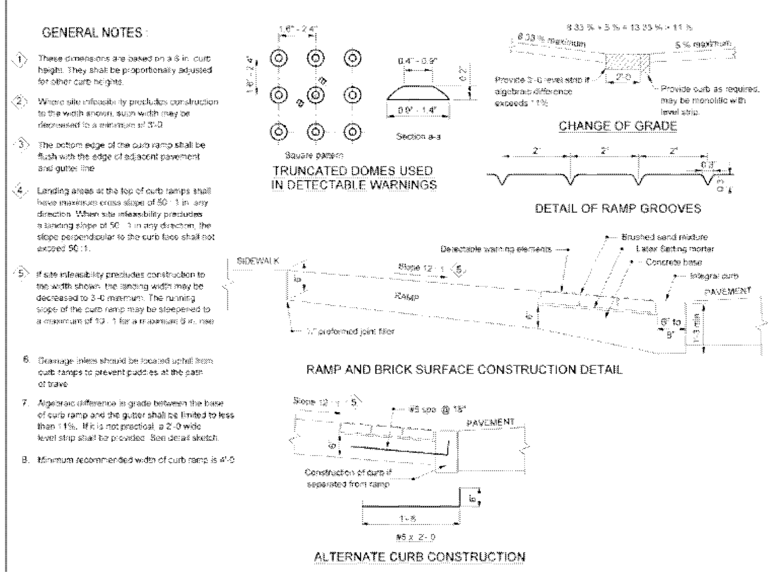

SIDEWALK RAMP FOR HANDICAPPED

TOWN OF WESTFIELD, INDIANA

Renée Lynn Goff 10/9/06 DATE FIGURE P-11

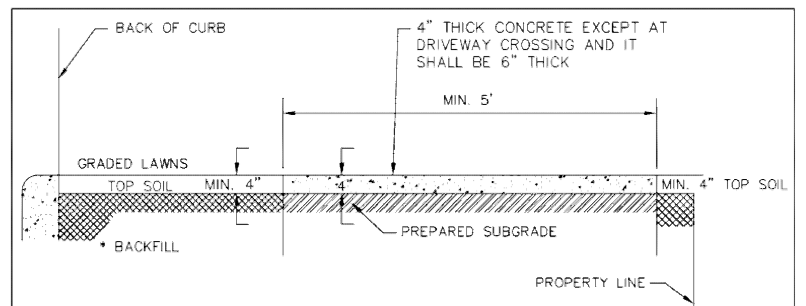

TYPICAL SIDEWALK SECTION
NOT TO SCALE

* THE SPACE BEHIND THE CURB SHALL BE FILLED WITH SUITABLE MATERIAL TO THE REQUIRED ELEVATION AND COMPACTED IN LAYERS NOT TO EXCEED 6" IN DEPTH.

SUBGRADE UNDER ALL CURBS, SIDEWALKS, AND DRIVES SHALL BE COMPACTED IN ACCORDANCE WITH I.N.D.O.T. SPECIFICATIONS.

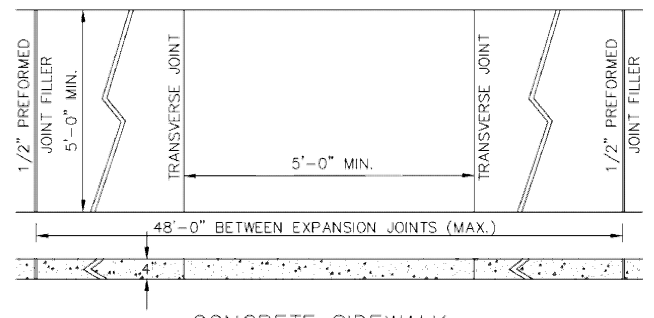

CONCRETE SIDEWALK
NOT TO SCALE

SIDEWALK DETAILS

TOWN OF WESTFIELD, INDIANA

Renée Lynn Goff 10/9/06 DATE FIGURE P-10

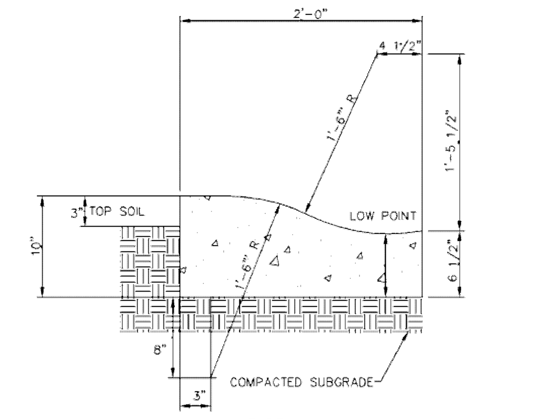

TYPE I

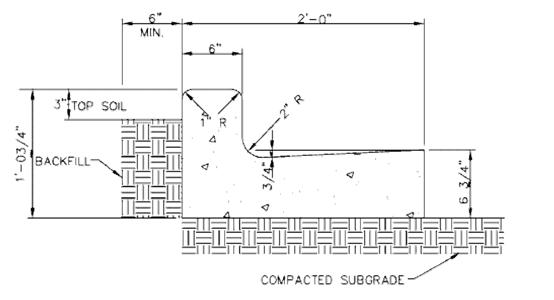

TYPE II

CONCRETE CURB AND GUTTER TYPE I & II

TOWN OF WESTFIELD, INDIANA

Renée Lynn Goff 10/9/06 DATE FIGURE P-8

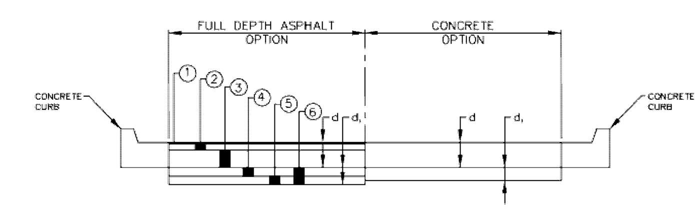

INDUSTRIAL AND ARTERIAL

	ASPHALT (d+d1 =9"+9"=18")	ASPHALT ALTERNATIVE (d+d1 =9"+18"=27")	CONCRETE
1	1" SURFACE #11 OR #12	1" SURFACE #11 OR #12	d=8" CONCRETE
2	2" BINDER #9	2" BINDER #9	d =6" COMP. AGGR. (SIZE 53)
3	6" BASE #5D	6" BASE #5D	
4	N.A.	N.A.	
5	N.A.	6" COMP. AGGR. SIZE No 53	
6	9" COMP. AGGR. (SIZE No. 53)	12" LIME TREATED * SUBBASE	

* LIME MODIFICATION SHALL BE BETWEEN 3% AND 6% BY WEIGHT WITH THE SOIL TEMPERATURE 45° OR ABOVE MEASURED 4"(100mm) BELOW THE SUBGRADE SURFACE WITH THE AIR TEMPERATURE RISING. ALL IN ACCORDANCE WITH THE LATEST AMENDED VERSION OF THE INDIANA DEPARTMENT OF TRANSPORTATION'S SPECIAL PROVISION FOR LIME MODIFICATION.

NOTE: * DEPTH OF CONCRETE GUTTER SHALL EQUAL DEPTH OF CONCRETE PAVEMENT.

TYPICAL PAVEMENT SECTIONS

TOWN OF WESTFIELD, INDIANA

Renée Lynn Goff 10/9/06 DATE FIGURE P-3

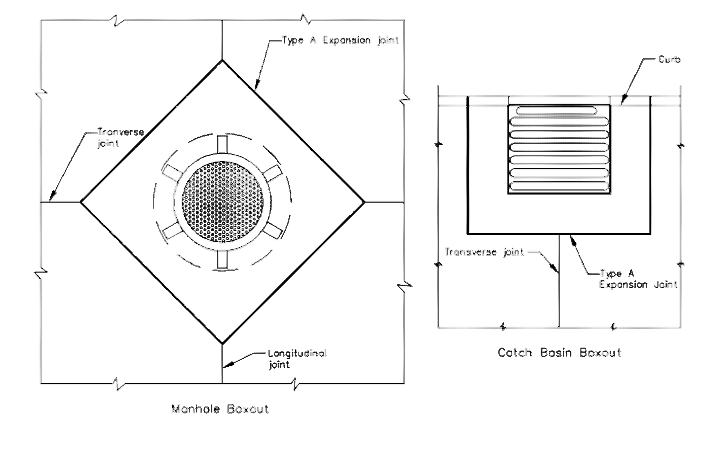

1. All catch basins shall be separated from the pavement and curb by boxing out around basin as shown above. Expansion joint material shall extend completely through curb and slab. Manhole castings within the pavement limits shall be boxed in like manner except when telescoping-type castings are used.

2. When a joint falls within 5 ft. of or contacts basins, manholes, or other structures, shorten one or more panels either side of opening to permit joint to fall on round structures and at or between corners of rectangular structures.

STRUCTURE DETAILS

TOWN OF WESTFIELD, INDIANA

Renée Lynn Goff 10/9/06 DATE FIGURE P-6

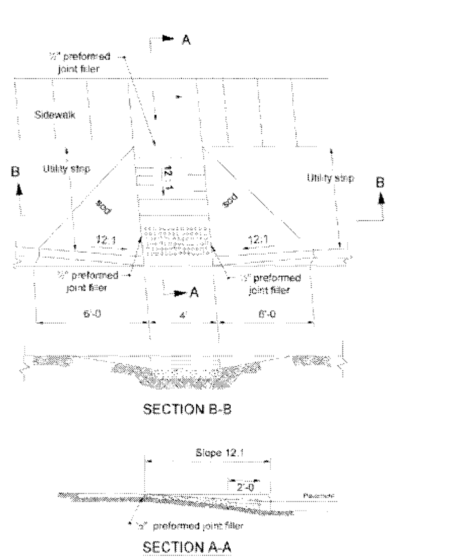

SIDEWALK RAMP FOR HANDICAPPED

TOWN OF WESTFIELD, INDIANA

Renée Lynn Goff 10/9/06 DATE FIGURE P-11A

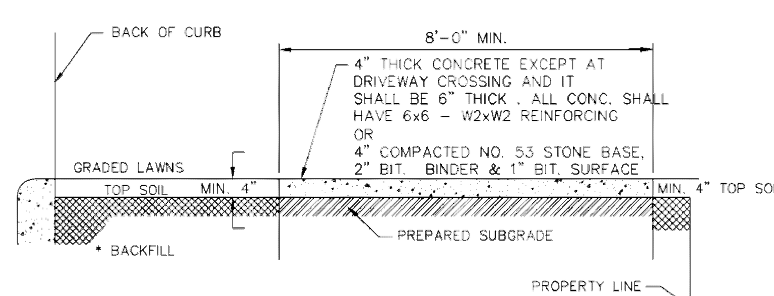

TYPICAL PATH SECTION
NOT TO SCALE

* THE SPACE BEHIND THE CURB SHALL BE FILLED WITH SUITABLE MATERIAL TO THE REQUIRED ELEVATION AND COMPACTED IN LAYERS NOT TO EXCEED 6" IN DEPTH.

SUBGRADE UNDER ALL CURBS, SIDEWALKS, PATHS AND DRIVES SHALL BE COMPACTED IN ACCORDANCE WITH I.N.D.O.T. SPECIFICATIONS.

SEE SECTION 02502 (STANDARDS FOR ROADWAY CONSTRUCTION) FOR DETAILED DISCRIPTION OF BICYCLE/JOGGING PATH CONSTRUCTION

BICYCLE/JOGGING PATH DETAIL

TOWN OF WESTFIELD, INDIANA

Renée Lynn Goff 10/9/06 DATE FIGURE P-16

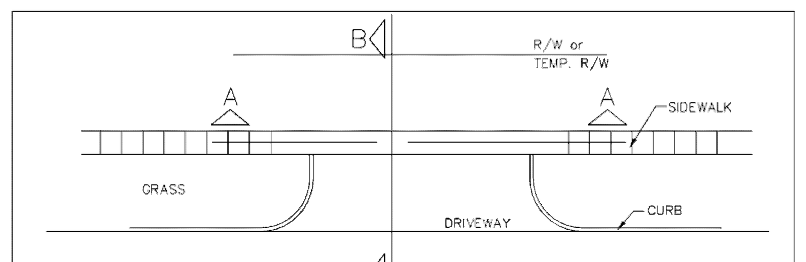

PLAN VIEW

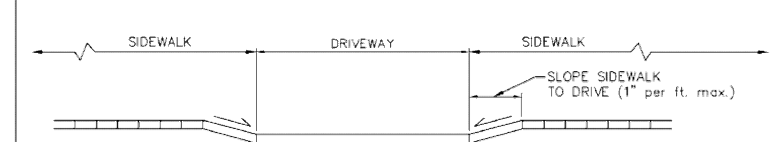

SECT. A–A

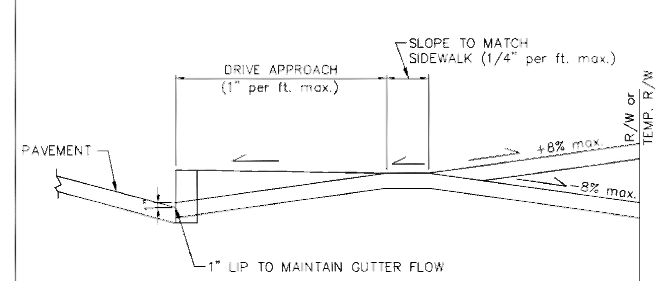

SECT. B–B

TYPICAL DRIVEWAY SECTION

TOWN OF WESTFIELD, INDIANA

Renée Lynn Goff 10/9/06 DATE FIGURE P-17

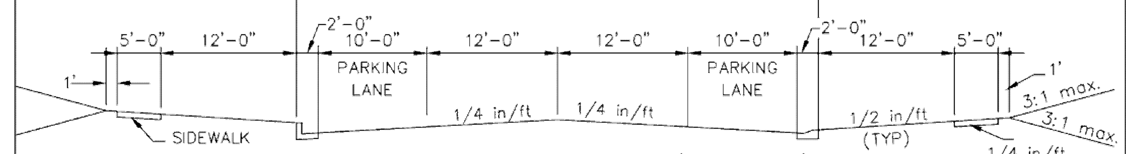

TYPICAL SECTION – SECONDARY ARTERIAL (WITH PARKING)

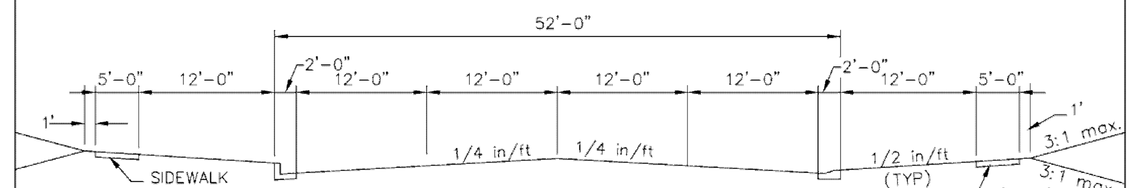

TYPICAL SECTION – SECONDARY ARTERIAL (NO PARKING)

NOTES:
1. The curb & gutter shall be Type I or Type II as shown on the Curb & Gutter standard sheets. Type II curb & gutter shall be used adjacent to, and in, non-residential or multi-family residential areas and on entrances of residential development along thoroughfares.
2. For curb and gutter detail, see figure P-8
3. For minimum Right of Way requirements, see figures G-14 and G-14.1

TOWN OF WESTFIELD, INDIANA

Renée Lynn Goff 10/9/06 DATE FIGURE G-03

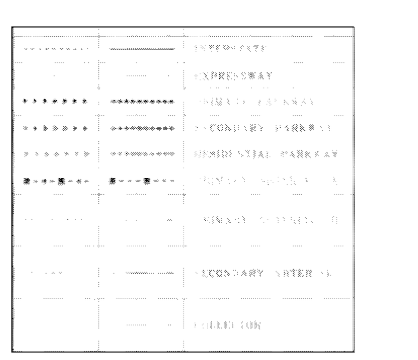

CLASSIFICATION		MINIMUM RIGHT OF WAY AT ITNERSCTION	AT THOUGH LANES
INTERSTATE		VARIES	VARIES
EXPRESSWAY		VARIES	VARIES
PRIMARY PARKWAY	WITH PATHS	160'	140'
SECONDARY PARKWAY	WITH PATHS	150'	120'
RESIDENTIAL PARKWAY	WITH PATHS	130'	100'
PRIMARY ARTERIAL "A"	WITH PATHS	170'	150'
PRIMARY ARTERIAL "B"	WITH MULTI-USE PATHS WITH FULL SEPERATION	150'	130'
	WITHOUT MULTI-USE PATHS	140'	120'
SECONDARY ARTERIAL	WITH MULTI-USE PATHS WITH FULL SEPERATION	150'	120'
	WITHOUT MULTI-USE PATHS	120'	90'
COLLECTOR	WITH MULTI-USE PATHS WITH FULL SEPERATION	130'	100'
	WITHOUT MULTI-USE PATHS	120'	80'

TOWN OF WESTFIELD, INDIANA

Renée Lynn Goff 10/9/06 DATE FIGURE G-14.1

NOTE:
SIGN IS TO BE MOUNTED ON GALVANIZED STEEL U-POST AND MEET IN.D.O.T. AND INDIANA MANUAL ON UNIFORM TRAFFIC CONTROL DEVICES FOR STREETS AND HIGHWAYS.

STOP SIGN (24" x 24")
(NO SCALE)

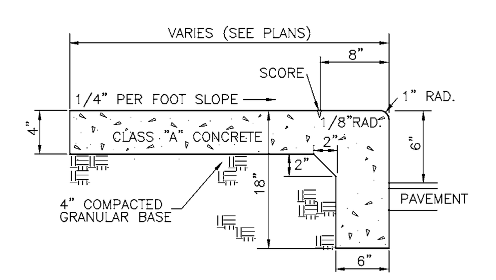

INTEGRAL WALK AND CURB DETAIL
(NO SCALE)

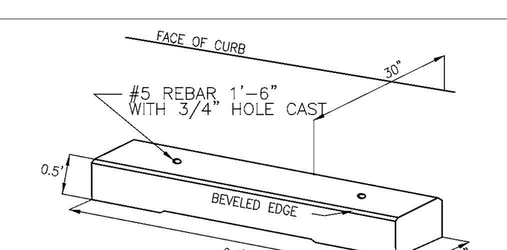

PRECAST CONC. PARKING BARRIER WITH 2-#3 REBARS USE 4000 PSI CONC.

PARKING BARRIER
(NO SCALE)

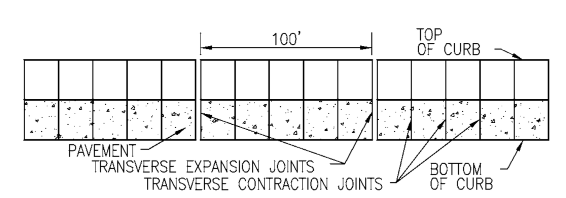

CURB JOINT DETAIL
(NO SCALE)

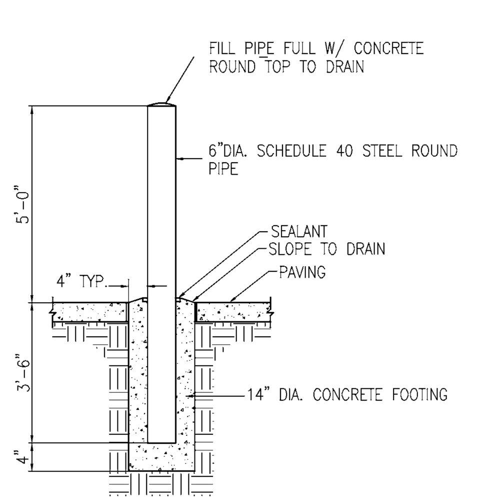

PIPE BOLLARD DETAIL
(NO SCALE)

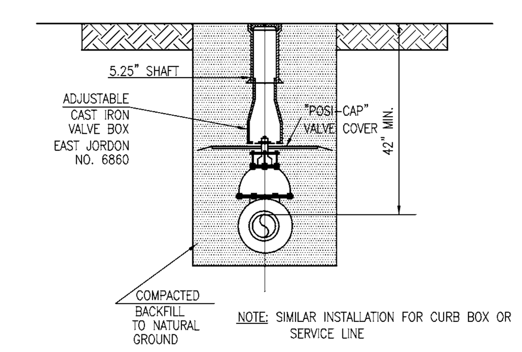

TYPICAL
VALVE BOX INSTALLATION
(NO SCALE)

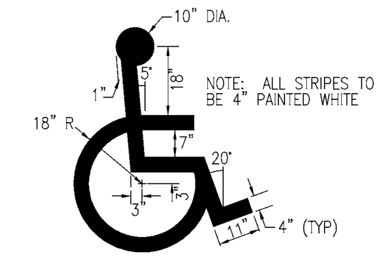

"ADA" PARKING
SYMBOL DETAIL
(NO SCALE)

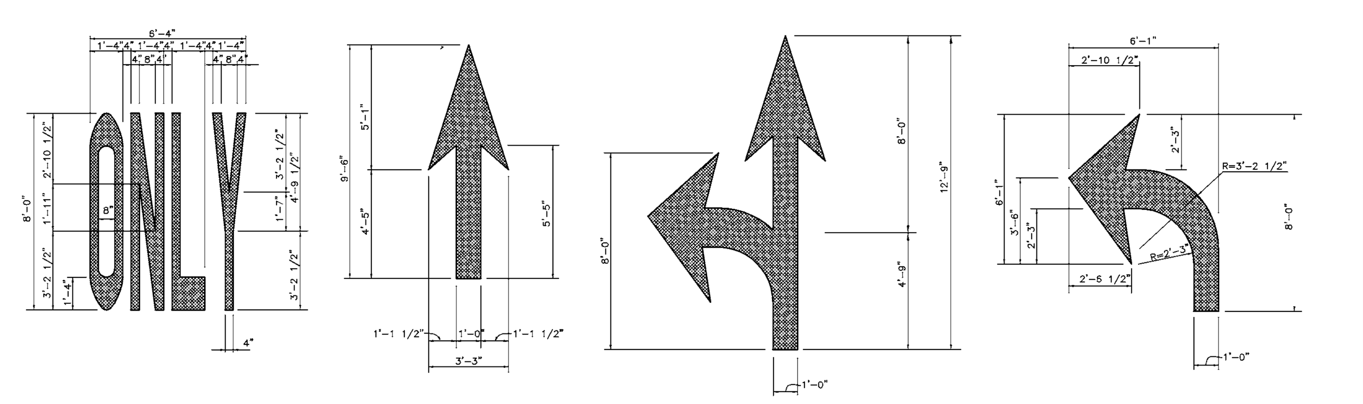

NOTE:
LANE CONTROL ARROWS SHALL BE WHITE AND SHALL BE PLACED IN ACCORDANCE WITH IMUTCD. THE ARROW SHOULD BE 20 FEET IN ADVANCE OF THE STOPLINE. THE WORD "ONLY" SHOULD BE LOCATED IN ADVANCE OF THE PAVEMENT ARROW.

TRAFFIC MARKING DETAILS
(NO SCALE)

NOTE:
TYPICAL SIZES FOR NORMAL INSTALLATION; SIZES MAY BE REDUCED APPROXIMATELY ONE-THIRD FOR LOW-SPEED URBAN CONDITIONS.

NOTE: ALL PAINT TO BE NON-SKID SURFACE APPLICATION OF CILICA SAND OR GLASS BEAD BY METHOD OF MIXTURE AND OR BROADCASTING.

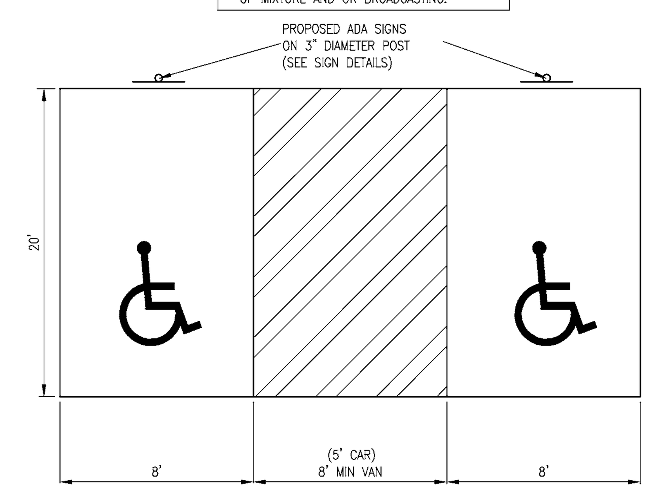

"ADA" PARKING SPACES
(NO SCALE)

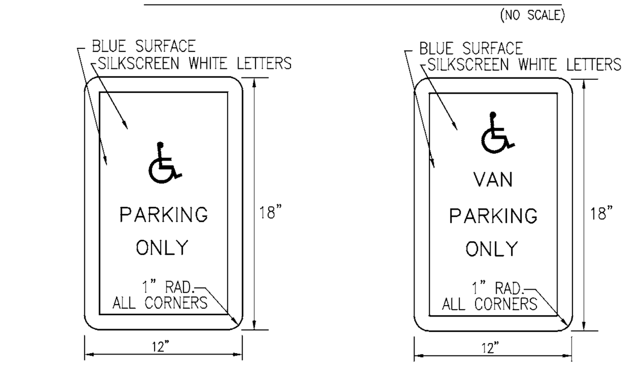

NOTE: 12"X18" 18 GAUGE HOT DIP GALVANIZED NON-REFLECTIVE SIGN WITH 12' POST DRIVEN 4 FEET INTO GROUND. POST SHALL BE 12' LONG GALVANIZED 2 1/2" OD STEEL POSTS PAINTED GREEN TO MATCH LIGHT POLES SET BOTTOM OF SIGN 7' ABOVE GRADE

"ADA" SIGNS
(NO SCALE)

ALL SIGNS SHALL COMPLY WITH U.S. DEPARTMENT OF TRANSPORTATION, FEDERAL HIGHWAY ADMINISTRATION'S "MANUAL OF UNIFORM TRAFFIC CONTROL DEVICES",LOCAL CODES AND AS SPECIFIED. MOUNT SIGNS TO POST IN ACCORDANCE WITH MANUFACTURER'S INSTRUCTIONS.

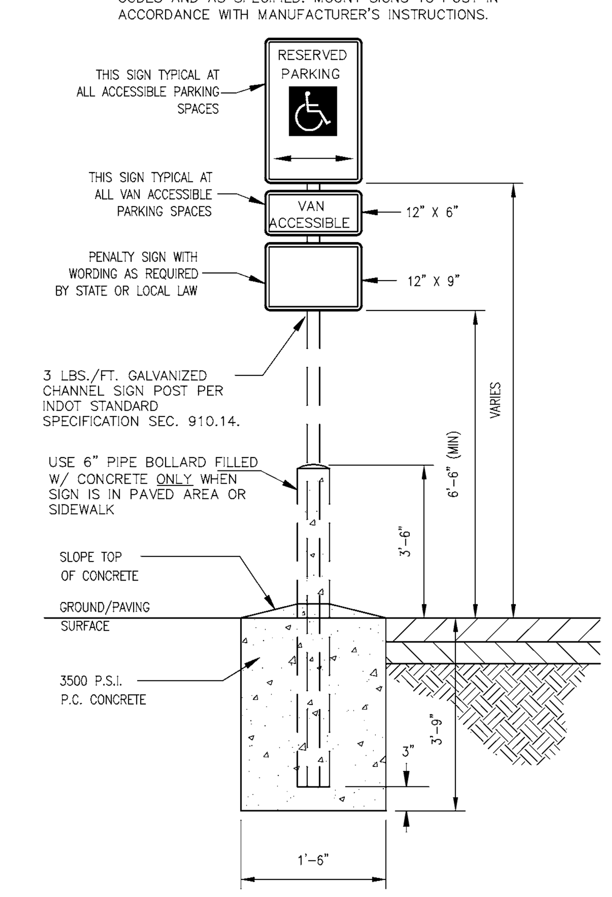

'ADA' SIGN BOLLARD
MOUNT DETAIL
(NO SCALE)

Know what's **below.**
Call before you dig.

Within Indiana Call
811 or 800-382-5544
24 Hours a Day, 7 Days a Week.

PER INDIANA STATE LAW IC 8-1-26. IT IS AGAINST THE LAW TO EXCAVATE WITHOUT NOTIFYING THE UNDERGROUND LOCATION SERVICE TWO (2) WORKING DAYS BEFORE COMMENCING WORK.

PRELIMINARY CONSTRUCTION PLANS

10505 N. College Avenue
Indianapolis, Indiana 46280
weihe.net

317 | 846 - 6611
800 | 452 - 6408
317 | 843 - 0546 *fax*

ALLAN H. WEIHE, P.E., L.S. - FOUNDER

WEIHE ENGINEERS
Land Surveying | Civil Engineering
Landscape Architecture

PROJECT NO.: W12.0262
DWG NAME: 120262-C201 det.dwg
DESIGNED BY: EAC/MG
DRAWN BY: EAC/MG
CHECKED BY: JKS
DATE: 06.29.2012

REVISIONS AND ISSUES | DATE | BY

JAMES K. SHINNEMAN REGISTERED NO. 10200392 STATE OF INDIANA PROFESSIONAL ENGINEER
APPROVAL PENDING NOT FOR CONSTRUCTION

JAMES K. SHINNEMAN P.E. 10200392

PREPARED FOR:
EPIPHANY EVANGELICAL LUTHERAN CHURCH PHASE ONE

156TH AND DITCH ROAD, WESTFIELD IN

SITE LAYOUT DETAILS

Part of the SE Corner of SW/1/4 of Section 10, Township 18 North, Range 3 East, Washington Township, Hamilton County, Indiana

SHEET NO.
C202

PROJECT NO.
W12.0262

LOCATION: H:\2012\w120262\Engineering\design\conset\120262-C201 det.dwg
LAYOUT: C202 – SITE DETAILS
DATE/TIME: June 29, 2012 – 8:00am
PLOTTED BY: cartere

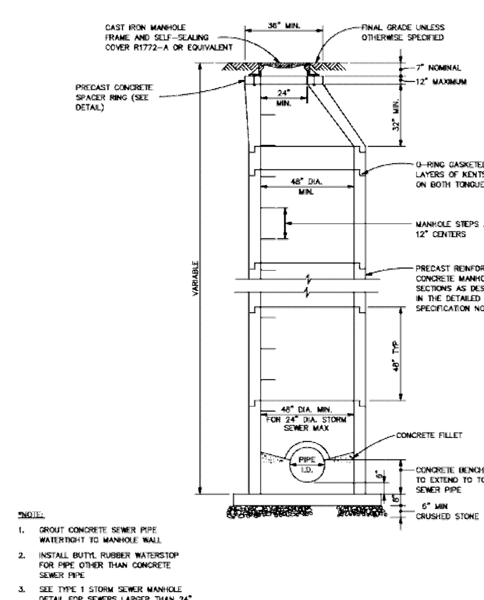

*NOTE:
1. GROUT CONCRETE SEWER PIPE WATERTIGHT TO MANHOLE WALL
2. INSTALL BUTYL RUBBER WATERSTOP FOR PIPE OTHER THAN CONCRETE SEWER PIPE
3. SEE TYPE 1 STORM SEWER MANHOLE DETAIL FOR SEWERS LARGER THAN 24"

STANDARD STORM MANHOLE DETAIL

TOWN OF WESTFIELD, INDIANA

Renée Lynn Goff 4/10/06 DATE FIGURE ST-1

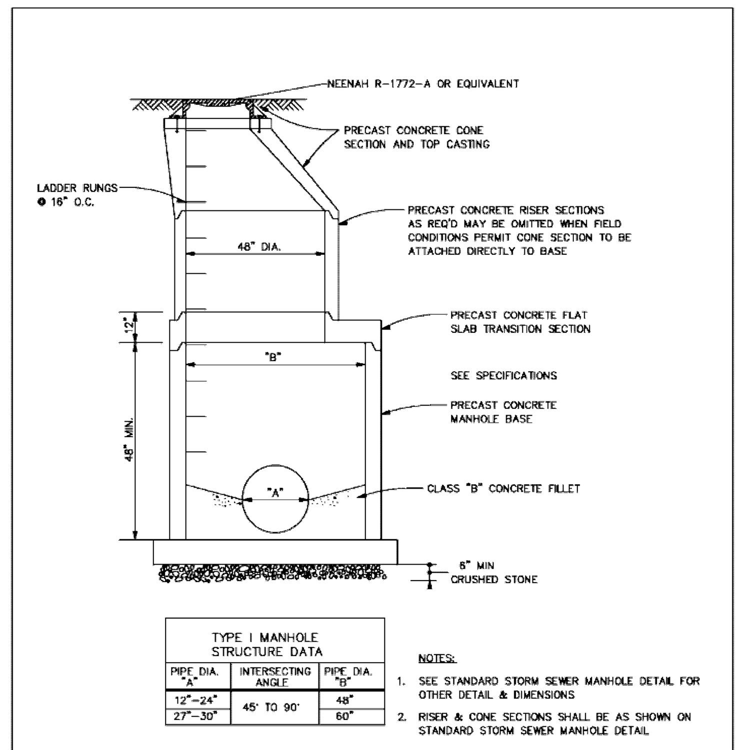

TYPE I MANHOLE STRUCTURE DATA		
PIPE DIA. "A"	INTERSECTING ANGLE	PIPE DIA. "B"
12"–24"	45° TO 90°	48"
27"–30"		60"

NOTES:
1. SEE STANDARD STORM SEWER MANHOLE DETAIL FOR OTHER DETAIL & DIMENSIONS
2. RISER & CONE SECTIONS SHALL BE AS SHOWN ON STANDARD STORM SEWER MANHOLE DETAIL

TYPE 1 STORM SEWER MANHOLE DETAIL

CITY OF WESTFIELD, INDIANA

Neil B. VanTrees FIGURE ST-2

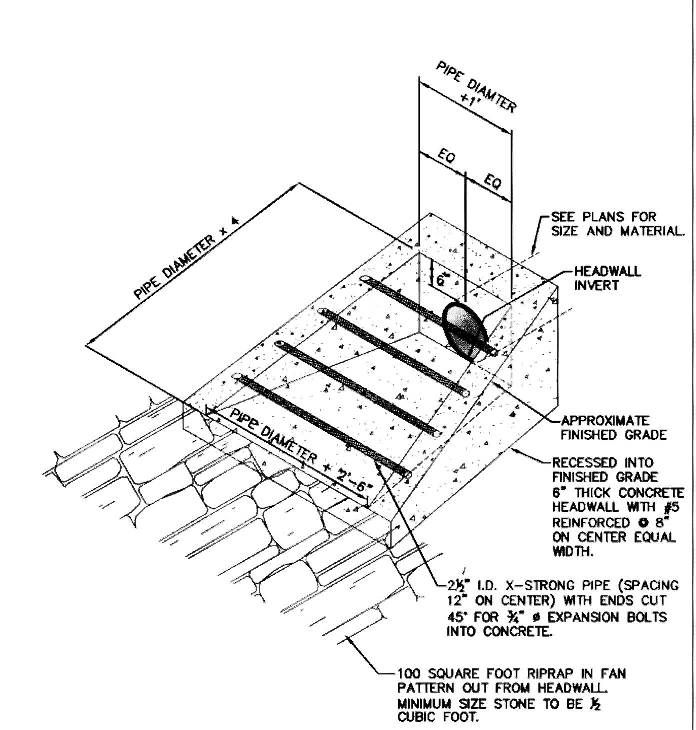

NOTE: HEADWALL SIMILAR TO TYPE "I" EXCEPT FOR PIPE GUARDS

ISOMETRIC @ HEADWALL TYPE "II"

TOWN OF WESTFIELD, INDIANA

Renée Lynn Goff 4/10/06 DATE FIGURE ST-6

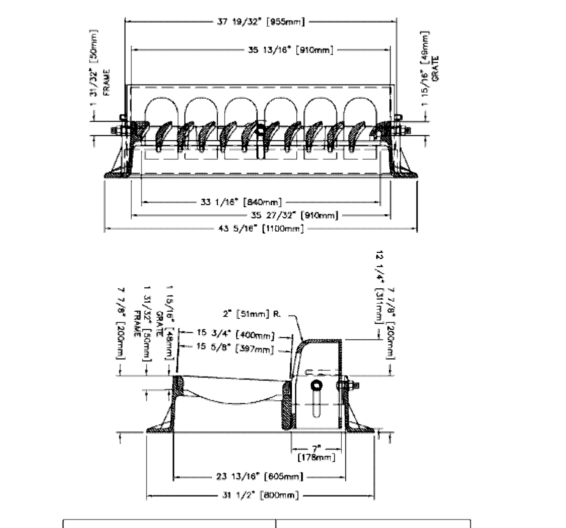

NEENAH	R-3287-10V
EAST JORDAN	7505 M1 & T2

* OR APROVED BY WESTFIELD PUBLIC WORKS DEPARTMENT
** STORM SEWER CASTINGS MANHOLE COVERS, BEEHIVE INLETS, CURB INLETS OR OTHER APPROVED CASTING SHALL HAVE THE FOLLOWING PHRASES CAST IN RECESSED LETTERS TWO (2) INCHES IN HEIGHT:
A. "STORM SEWER"
B. "DRAINS TO RIVER" OR "DRAINS TO WATERWAY"
C. "DUMP NO WASTE"
D. OTHER PHRASES SHALL REQUIRE APPROVAL OF THE WESTFIELD PUBLIC WORKS DEPARTMENT.

CHAIR BACK CURB INLET CASTING

TOWN OF WESTFIELD, INDIANA

Renée Lynn Goff 4/10/06 DATE FIGURE ST-8

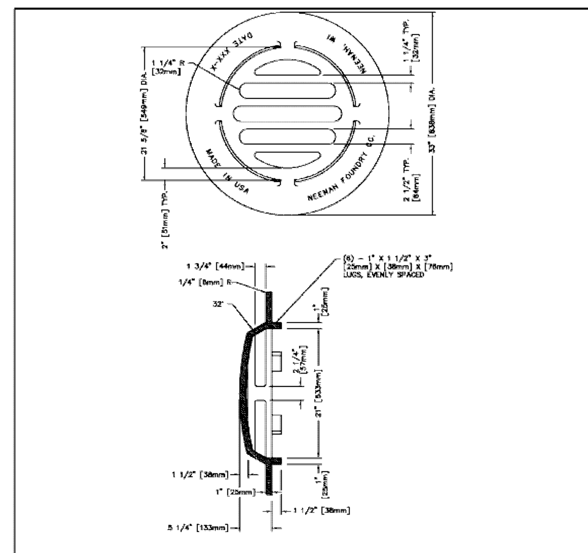

NEENAH	R-4342
EAST JORDAN	6489

* OR APROVED BY WESTFIELD PUBLIC WORKS DEPARTMENT
** STORM SEWER CASTINGS MANHOLE COVERS, BEEHIVE INLETS, CURB INLETS OR OTHER APPROVED CASTING SHALL HAVE THE FOLLOWING PHRASES CAST IN RECESSED LETTERS TWO (2) INCHES IN HEIGHT:
A. "STORM SEWER"
B. "DRAINS TO RIVER" OR "DRAINS TO WATERWAY"
C. "DUMP NO WASTE"
D. OTHER PHRASES SHALL REQUIRE APPROVAL OF THE WESTFIELD PUBLIC WORKS DEPARTMENT.

BEEHIVE CURB INLET CASTING

TOWN OF WESTFIELD, INDIANA

Renée Lynn Goff 4/10/06 DATE FIGURE ST-10

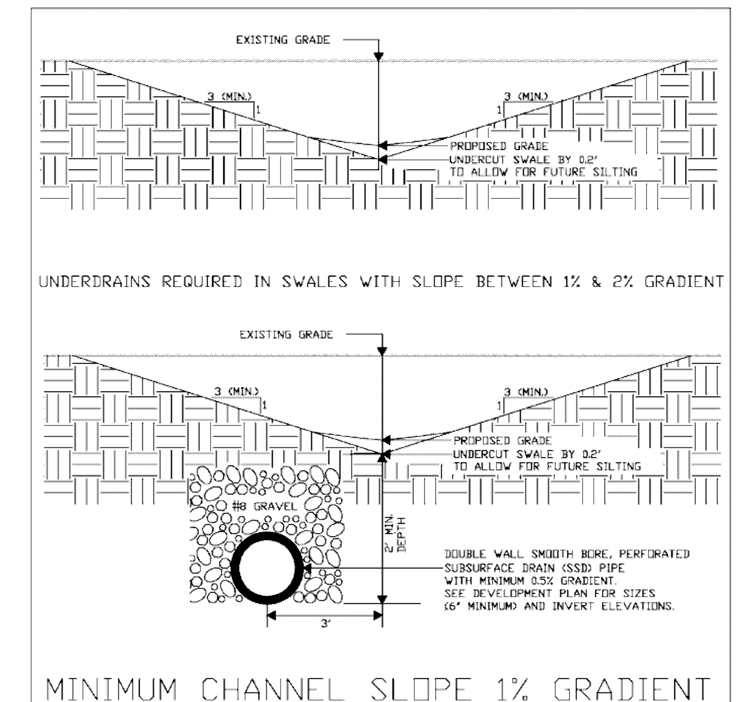

MINIMUM CHANNEL SLOPE 1% GRADIENT

(DRAWING NOT TO SCALE)

TYPICAL SWALE DETAIL

TOWN OF WESTFIELD, INDIANA

Renée Lynn Goff 4/10/06 DATE FIGURE ST-43

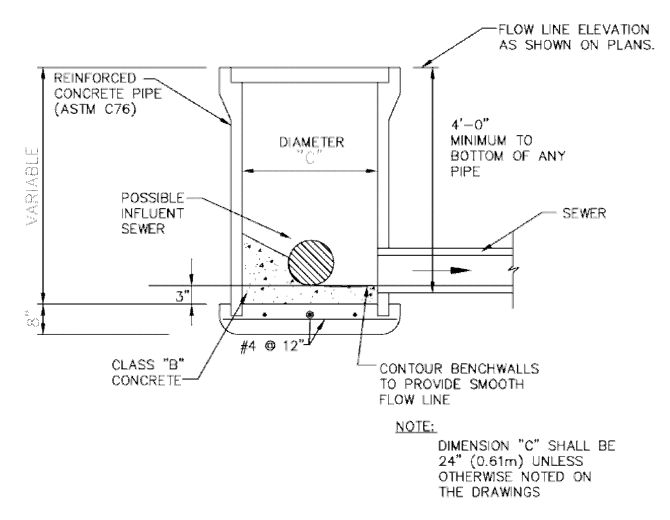

NOTE:
DIMENSION "C" SHALL BE 24" (0.61m) UNLESS OTHERWISE NOTED ON THE DRAWINGS

SECTION

CAST	"A"	"B"
TYPE 1	36" (0.91m)	24" (0.61m)
TYPE 2	24" (0.61m)	22" (0.56m)
TYPE 3	22" (0.56m)	20" (0.51m)

NOTES:
1. THESE DIMENSIONS ARE ALSO APPLICABLE TO TYPE CA CATCH BASINS.
2. PRECAST INLETS AND CATCH BASINS SHALL BE CONSIDERED AN ACCEPTABLE ALTERNATE IF APPROVED BY THE WESTFIELD PUBLIC WORKS DEPARTMENT.

INLET STRUCTURE TYPE 1

TOWN OF WESTFIELD, INDIANA

Renée Lynn Goff 4/10/06 DATE FIGURE ST-12

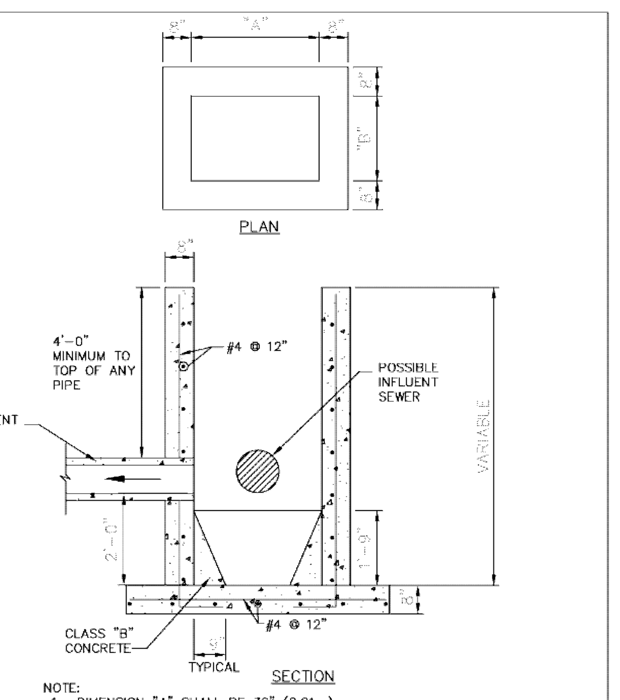

NOTE:
1. DIMENSION "A" SHALL BE 36" (0.91m) AND DIMENSION "B" SHALL BE 24" (0.61m) UNLESS OTHERWISE NOTED ON THE DRAWINGS.
2. PRECAST CATCH BASINS SHALL BE CONSIDERED AN ACCEPTABLE ALTERNATE IF APPROVED BY THE WESTFIELD PUBLC WORKS DEPARTMENT

TYPE "CA" CATCH BASIN DETAIL

TOWN OF WESTFIELD, INDIANA

Renée Lynn Goff 4/10/06 DATE FIGURE ST-13

PIPE SIZE (INCHES)	STRUCTURES LESS THAN 48" FROM T/C TO INVERT (INCHES)	STRUCTURES GREATER THAN 48" FROM T/C TO INVERT	ANGLE AND QUALITY OF PIPES WILL REQUIRE SPECIAL DESIGN	STEPS REQUIRED	CURB CASTING #R-3501N	CASTING #3501 TL & TR
12 TO 18	24 X 24	***	DESIGN APPROVAL	NO	YES	YES
12 TO 21	30 X 30	***	DESIGN APPROVAL	NO	YES	YES
18 TO 21		MH/BOX	DESIGN APPROVAL	YES	YES	YES
21 TO 27	24 X 36* OR 36 X 36	***	DESIGN APPROVAL	NO	NO	YES
12 TO 24	36 X 36	***	DESIGN APPROVAL	NO	YES	YES
24 OR LARGER	DESIGN APPROVAL	***	DESIGN APPROVAL	NO	NO	YES
24 OR LARGER		MH/BOX	DESIGN APPROVAL	YES**	YES	YES

* PIPES NO LARGER THAN 18" CAN BE USED IN THE 2' SIDE OF THIS BOX.

**INCOMING AND OUT GOING PIPES EFFECT STEPS IN THIS STRUCTURE.

***SPECIAL NOTE: STRUCTURES DEEPER THAN 48" FROM T/C TO INVERT WILL BE A M.H. OR A BOX WITH STEPS UNLESS SPECIAL DESIGN IS APPROVED.

SPECIAL NOTE: STRUCTURES WILL BE DESIGNED FOR MAXIMUM FLOW IN PIPES.

SPECIAL NOTE: TOWN MAY REQUIRE STEPS TO BE INSTALLED AFTER STRUCTURE IS SET, TO IMPROVE ACCESS.

STORM STRUCTURE SIZING TABLE

TOWN OF WESTFIELD, INDIANA

Renée Lynn Goff 4/10/06 DATE FIGURE ST-15

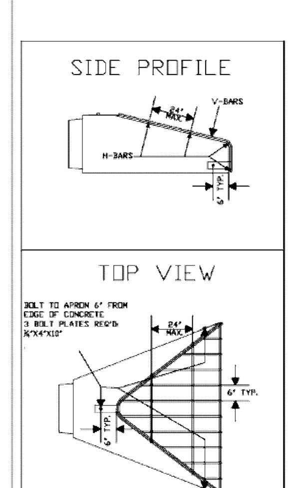

	Apron Size Inches	V-bar Size Inches	No. of H-bars Req'd	H-bar Size Inches	Bolt Dia. Inches	"A" Dim. Inches
Arch pipe aprons	18	1/2	3	5/8	1/2	5
	24	5/8	4	3/4	1/2	7
	30	5/8	4	3/4	1/2	7 1/2
	36	3/4	4	1	1/2	10 1/2
	42	3/4	4	1	3/4	11
	48	3/4	4	1 ½ pipe	3/4	12
	54	3/4	4	1 ½ pipe	3/4	12
	60	3/4	5	1 ½ pipe	3/4	14
	72	3/4	5	1 ½ pipe	3/4	14
	84	3/4	6	1 ½ pipe	3/4	15
Round pipe aprons	12	1/2	3	5/8	1/2	4
	15	1/2	3	5/8	1/2	4 1/2
	18	1/2	4	5/8	1/2	4 1/2
	21	1/2	4	5/8	1/2	5
	24	5/8	4	3/4	1/2	5
	27	5/8	4	3/4	1/2	5 1/2
	30	5/8	4	3/4	1/2	5 1/2
	36	3/4	4	1	3/4	8
	42	3/4	4	1	3/4	8
	48	3/4	5	1	3/4	8
	54	3/4	5	1 ½ pipe	3/4	8
	60	3/4	5	1 ½ pipe	3/4	8
	66	3/4	6	1 ½ pipe	3/4	8
	72	3/4	6	1 ½ pipe	3/4	9
	84	3/4	7	1 ½ pipe	3/4	10
	90	3/4	7	1 ½ pipe	3/4	14

NOTES:
1. BARS & PLATES ARE HOT-ROLLED STEEL.
2. BARS, PLATES, & PIPIE ARE FINISHED WITH 2 COATS OF ALUMINUM PAINT.
3. BOLTS ARE GALVINIZED
4. NO REBAR THROUGH PIPES WILL BE ALLOWED
5. DEBRIS GUARD SHALL BE REMOVABLE

(DRAWING NOT TO SCALE)

DEBRIS GUARD

TOWN OF WESTFIELD, INDIANA

Renée Lynn Goff 4/10/06 DATE FIGURE ST-29

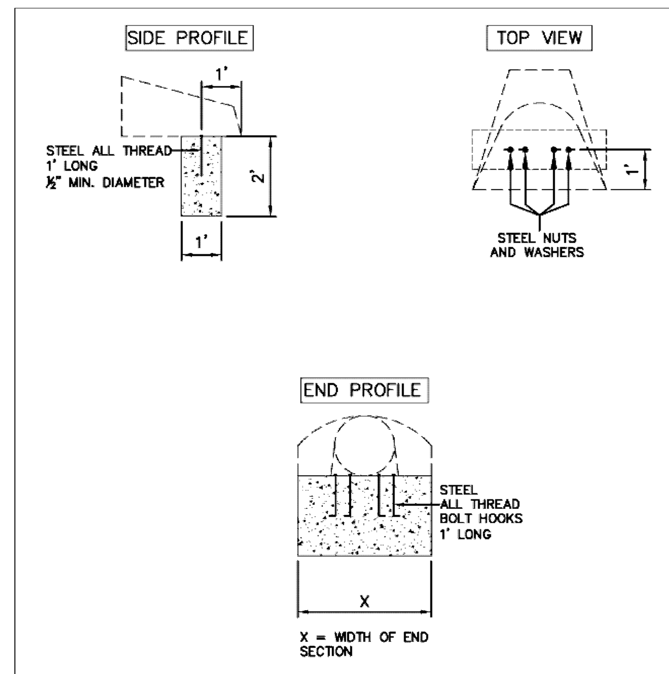

ALLTHREAD SPACING TO BE TWO PER FOOT
EX: 12" END SECTION = 2 ALLTHREAD
24" END SECTION = 4 ALLTHREAD

ANCHOR FOR CONCRETE END SECTIONS

TOWN OF WESTFIELD, INDIANA

Renée Lynn Goff 4/10/06 DATE FIGURE ST-30

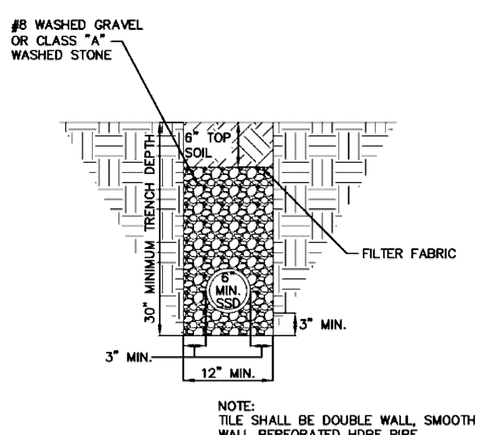

NOTE:
TILE SHALL BE DOUBLE WALL, SMOOTH WALL PERFORATED HDPE PIPE.

SUBSURFACE DRAIN (SSD) DETAIL
NO SWALE

TOWN OF WESTFIELD, INDIANA

Renée Lynn Goff 4/10/06 DATE FIGURE ST-40

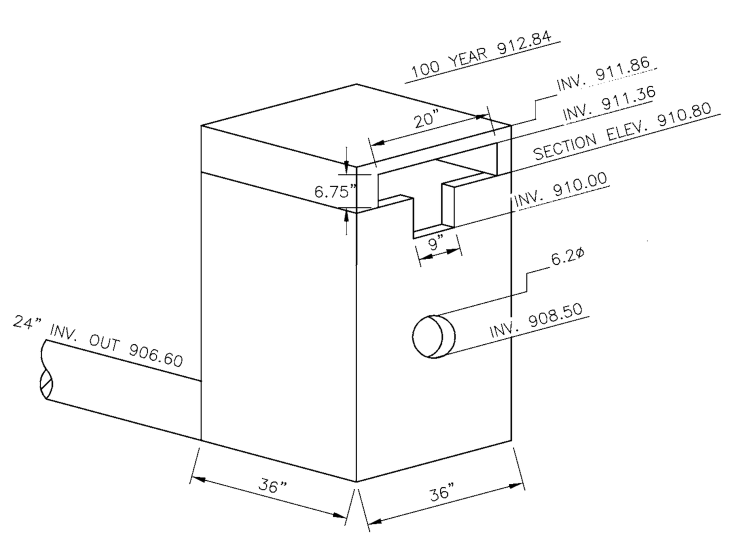

OUTLET STRUCTURE
MODIFIED FOR CONTROL
(NO SCALE)

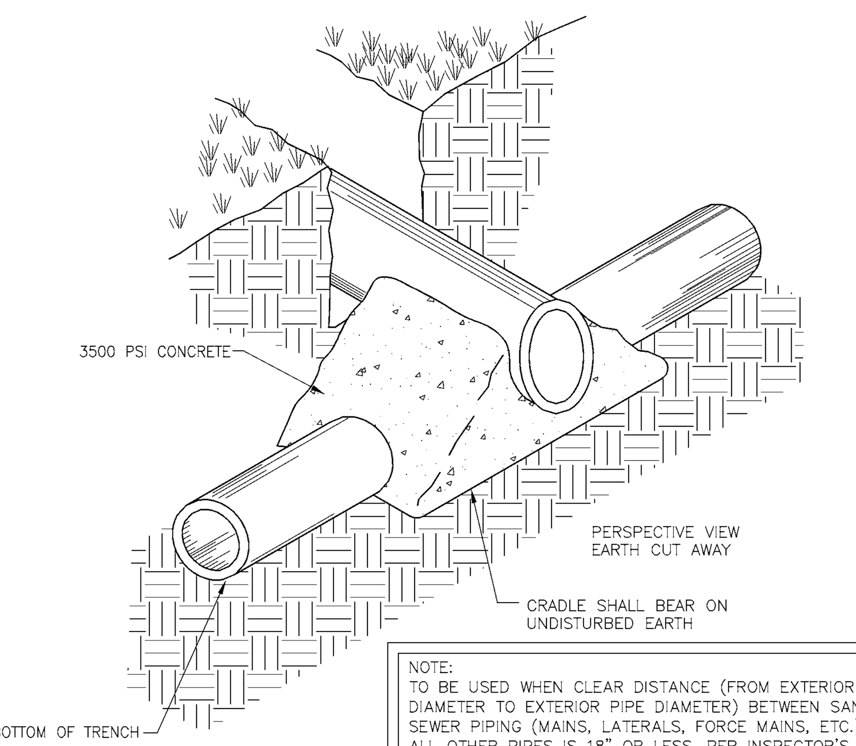

NOTE:
TO BE USED WHEN CLEAR DISTANCE (FROM EXTERIOR PIPE DIAMETER TO EXTERIOR PIPE DIAMETER) BETWEEN SANITARY SEWER PIPING (MAINS, LATERALS, FORCE MAINS, ETC.) AND ALL OTHER PIPES IS 18" OR LESS, PER INSPECTOR'S DIRECTION, OR WHERE NOTED ON THE DRAWINGS. A MINIMUM CLEAR DISTANCE OF 3" MUST BE PROVIDED TO MAINTAIN STRUCTURAL INTEGRITY OF THE CONCRETE.

CONCRETE CRADLE DETAIL
(NO SCALE)

Know what's **below.**
Call before you dig.

Within Indiana Call
811 or 800-382-5544
24 Hours a Day, 7 Days a Week.

PER INDIANA STATE LAW IC 8-1-26. IT IS AGAINST THE LAW TO EXCAVATE WITHOUT NOTIFYING THE UNDERGROUND LOCATION SERVICE TWO (2) WORKING DAYS BEFORE COMMENCING WORK.

PRELIMINARY CONSTRUCTION PLANS

10505 N. College Avenue
Indianapolis, Indiana 46280
weihe.net

317 | 846 - 6611
800 | 452 - 6408
317 | 843 - 0546 *fax*

ALLAN H. WEIHE, P.E., L.S. - FOUNDER

WEIHE ENGINEERS
Land Surveying | Civil Engineering
Landscape Architecture

PROJECT NO.: W12.0262
DWG NAME: 120262-C201 det.dwg
DESIGNED BY: EAC/MG
DRAWN BY: EAC/MG
CHECKED BY: JKS
DATE: 06.29.2012

REVISIONS AND ISSUES	DATE	BY

JAMES K. SHINNEMAN REGISTERED No. 10200392 STATE OF INDIANA PROFESSIONAL ENGINEER
APPROVAL PENDING NOT FOR CONSTRUCTION

JAMES K. SHINNEMAN P.E. 10200392

PREPARED FOR:
EPIPHANY EVANGELICAL LUTHERAN CHURCH PHASE ONE

156TH AND DITCH ROAD, WESTFIELD IN

GRADING AND DRAINAGE DETAILS

Part of the SE Corner of SW/1/4 of Section 10, Township 18 North, Range 3 East, Washington Township, Hamilton County, Indiana

SHEET NO.
C203

PROJECT NO.
W12.0262

LOCATION: H:\2012\w120262\Engineering\design\conset\120262-C201 det.dwg
LAYOUT: C203 - GRADING DETAILS
DATE/TIME: June 29, 2012 - 8:00am
PLOTTED BY: cartere

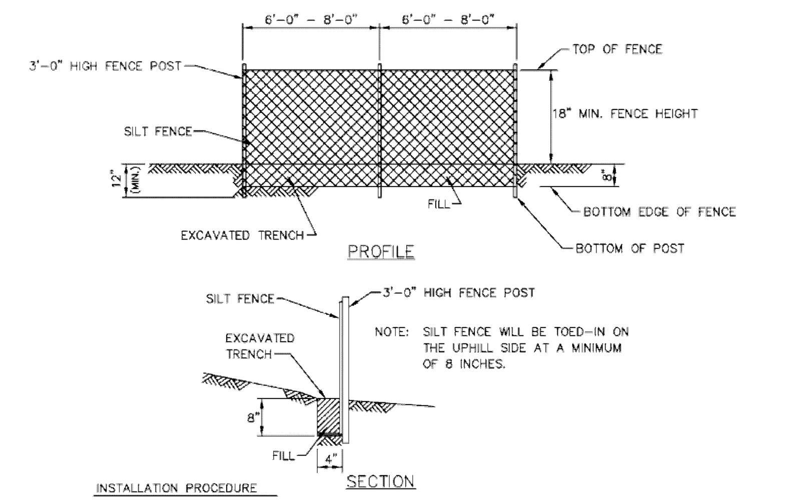

INSTALLATION PROCEDURE

1. 2" x 2" X 36" HARDWOOD OR STEEL FENCE POSTS ARE INSTALLED 6' APART (w/ EXTRA STRENGTH FABRIC WITHOUT WIRE BACKING) OR 8' APART (w/ WIRE BACKING), ON A SLIGHT ANGLE TOWARD THE ANTICIPATED RUNOFF SOURCE.
2. A TRENCH 4" WIDE BY 8" DEEP IS DUG ALONG THE UPHILL SIDE OF THE FENCE LINE.
3. THE SILT FENCE IS UNROLLED AND LAID OUT ALONG THE FENCE LINE.
4. A BUILT-IN ATTACHMENT CORD RUNS THROUGHOUT THE FULL LENGTH OF EACH 150 LINEAR FOOT ROLL. ONE END OF THE ROLL HAS APPROXIMATELY 5' OF CORD. THE OTHER END HAS APPROXIMATELY 20' OF CORD. THE END WITH 5' OF CORD IS WRAPPED AROUND THE FIRST POST AND SECURED.
5. THE FENCE IS PULLED TO THE NEXT POST AND A 1.5" SLIT IS MADE IN THE HEM DIRECTLY ABOVE THE CORD. THE CORD IS PULLED OUT OF THE HEM AND PULLED TAUT FROM THE PRECEDING POST AND WRAPPED TWICE AROUND THE POST.
6. THE SLITTING OF THE HEM ON EACH POST IS REPEATED UNTIL THE FINAL POST IS REACHED, AT WHICH TIME THE MATERIAL IS WRAPPED AROUND THE LAST POST AND SECURED WITH THE ENCLOSED CORD.
7. AT THIS TIME THE LOWER 8" OF THE FENCE IS LAID IN THE TRENCH AND CURLED TOWARD THE EROSION SOURCE. THE TRENCH IS THEN BACKFILLED WITH SOIL.

SILT FENCE DETAIL

Westfield PUBLIC WORKS — Parks • Utilities • Streets

RENEE LYNN GOFF REGISTERED No. 10403860 STATE OF INDIANA PROFESSIONAL ENGINEER

TOWN OF WESTFIELD, INDIANA

Renée Lynn Goff 4/10/06 DATE

FIGURE EC-4

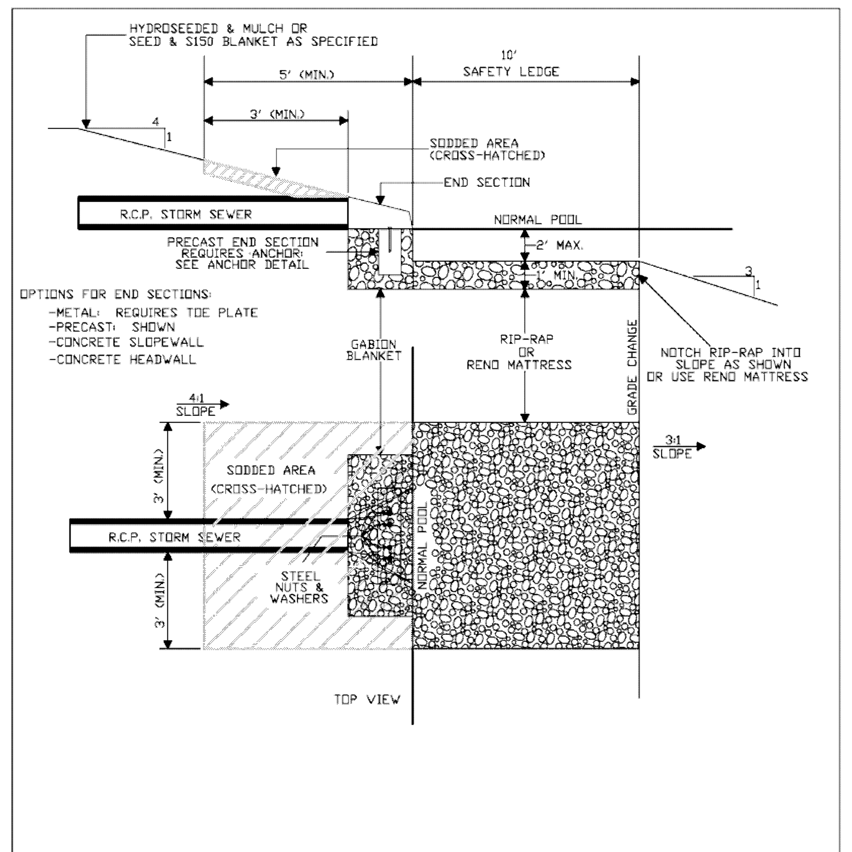

LAKE OUTLET DETAIL FOR LAKE CROSS-SECTION OPTION 2

Westfield PUBLIC WORKS — Parks • Utilities • Streets

RENEE LYNN GOFF REGISTERED No. 10403860 STATE OF INDIANA PROFESSIONAL ENGINEER

TOWN OF WESTFIELD, INDIANA

Renée Lynn Goff 4/10/06 DATE

FIGURE ST-27

OPEN LOW-MAINTENANCE AREAS (REMAINING IDLE MORE THAN SIX MONTHS)

SEED MIXTURES	RATE PER ACRE PURE LIVE SEED	OPTIMUM SOIL PH
1. PERENNIAL RYEGRASS – WHITE CLOVER	70 LBS. 2 LBS.	5.6 TO 7.0
2. PERENNIAL RYEGRASS – TALL FESCUE	70 LBS. 50 LBS.	5.6 TO 7.0
3. TALL FESCUE – WHITE CLOVER	70 LBS. 2 LBS.	5.5 TO 7.5

STEEP BANKS AND CUTS, LOW-MAINTENANCE AREAS (NOT MOWED)

SEED MIXTURES	RATE PER ACRE PURE LIVE SEED	OPTIMUM SOIL PH
1. SMOOTH BROME GRASS – RED CLOVER	35 LBS. 20 LBS.	5.5 TO 7.0
2. TALL FESCUE – WHITE CLOVER	50 LBS. 2 LBS.	5.5 TO 7.5
3. TALL FESCUE – RED CLOVER	50 LBS. 20 LBS.	5.5 TO 7.5
4. ORCHARD GRASS – RED CLOVER – WHITE CLOVER	30 LBS. 20 LBS. 2 LBS.	5.6 TO 7.0
5. CROWNVETCH – TALL FESCUE	12 LBS. 30 LBS.	5.6 TO 7.0

LAWNS AND HIGH-MAINTENANCE AREAS

SEED MIXTURES	RATE PER ACRE PURE LIVE SEED	OPTIMUM SOIL PH
1. BLUEGRASS	140 LBS.	5.5 TO 7.0
2. PERENNIAL RYEGRASS (TURF TYPE)	60 LBS. 90 LBS.	5.6 TO 7.0
3. TALL FESCUE (TURF TYPE) – BLUEGRASS	170 LBS. 30 LBS.	5.6 TO 7.5

CHANNELS AND AREAS OF CONCENTRATED FLOW

SEED MIXTURES	RATE PER ACRE PURE LIVE SEED	OPTIMUM SOIL PH
1. PERENNIAL RYEGRASS – WHITE	150 LBS. 2 LBS.	5.5 TO 7.0
2. KENTUCKY BLUEGRASS – SMOOTH BROMEGRASS – SWITCHGRASS – TIMOTHY – PERENNIAL RYEGRASS – WHITE CLOVER	20 LBS. 10 LBS. 3 LBS. 4 LBS. 10 LBS. 2 LBS.	5.5 TO 7.5
3. TALL FESCUE – WHITE CLOVER	150 LBS. 2 LBS.	5.5 TO 7.5
4. TALL FESCUE – PERENNIAL RYEGRASS – KENTUCKY BLUEGRASS	150 LBS. 20 LBS. 20 LBS.	5.5 TO 7.5

GENERAL NOTES

1. PREPARE SOIL BEFORE INSTALLING BLANKETS, INCLUDING APPLICATION OF LIME, FERTILIZER AND SEED.
2. BEGIN AT THE TOP OF THE CHANNEL BY ANCHORING THE BLANKET IN A 6" DEEP x 6" WIDE TRENCH. BACKFILL AND COMPACT THE TRENCH AFTER STAPLING.
3. ROLL CENTER BLANKET IN DIRECTION OF WATER FLOW ON BOTTOM OF CHANNEL.
4. PLACE BLANKETS END OVER END (SHINGLE STYLE) WITH A 6" OVERLAP. USE A DOUBLE ROW OF STAGGERED STAPLES 4" APART TO SECURE BLANKETS.
5. FULL LENGTH EDGE OF BLANKETS AT TOP OF SIDE SLOPES MUST BE ANCHORED IN 6" DEEP x 6" WIDE TRENCH. BACKFILL AND COMPACT THE TRENCH AFTER STAPLING.
6. BLANKETS ON SIDE SLOPES MUST BE OVERLAPPED 4" OVER THE CENTER BLANKET AND STAPLED.
7. IN MEDIUM/HIGH FLOW CHANNEL APPLICATIONS, A STAPLE CHECK SLOT IS RECOMMENDED AT 30 TO 40 FOOT INTERVALS. USE A ROW OF STAPLES 4" APART OVER ENTIRE WIDTH OF THE CHANNEL. PLACE A SECOND ROW 4" BELOW THE FIRST ROW IN A STAGGERED PATTERN.
8. THE TERMINAL END OF THE BLANKETS MUST BE ANCHORED IN A 6" DEEP x 6" WIDE TRENCH. BACKFILL AND COMPACT THE TRENCH AFTER STAPLING.

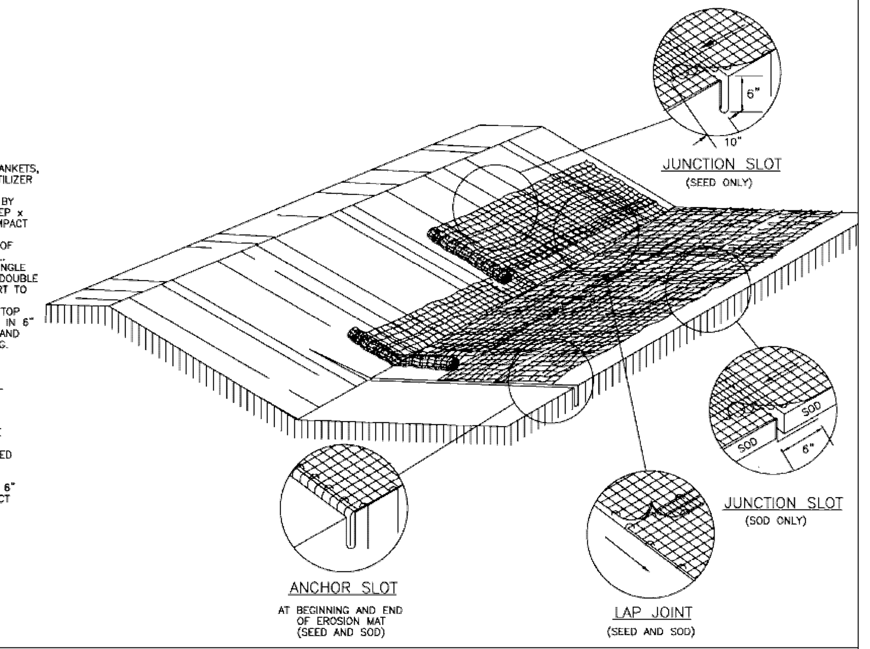

EROSION CONTROL MAT – SLOPE DETAIL

Westfield PUBLIC WORKS — Parks • Utilities • Streets

RENEE LYNN GOFF REGISTERED No. 10403860 STATE OF INDIANA PROFESSIONAL ENGINEER

TOWN OF WESTFIELD, INDIANA

Renée Lynn Goff 4/10/06 DATE

FIGURE EC-2

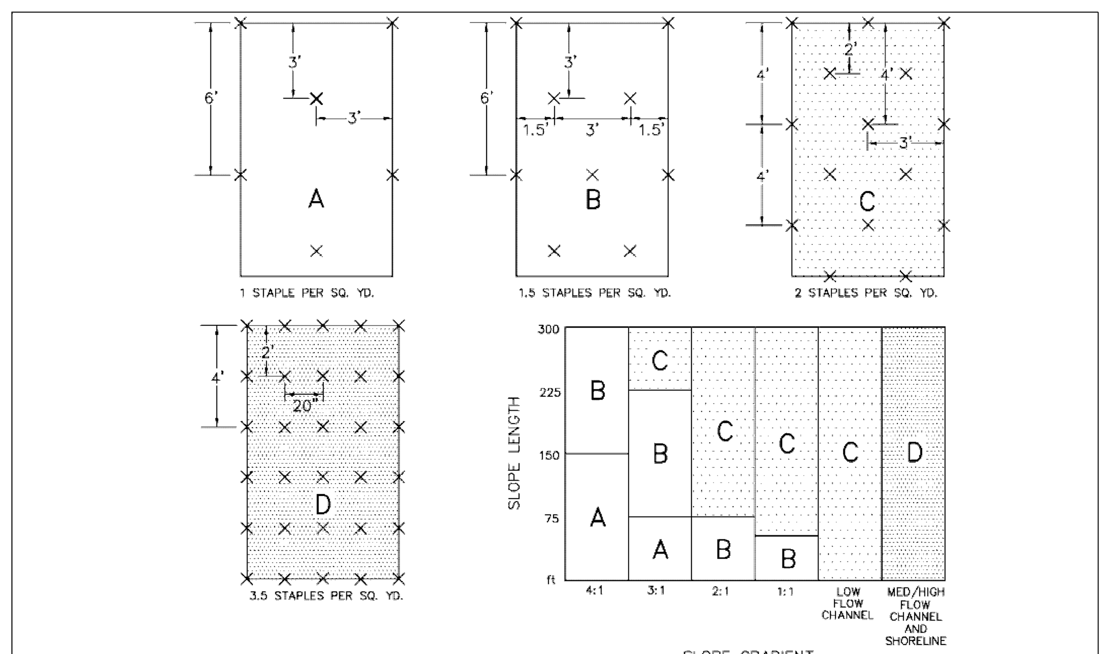

EROSION CONTROL MAT – STAPLE GUIDE

Westfield PUBLIC WORKS — Parks • Utilities • Streets

RENEE LYNN GOFF REGISTERED No. 10403860 STATE OF INDIANA PROFESSIONAL ENGINEER

TOWN OF WESTFIELD, INDIANA

Renée Lynn Goff 4/10/06 DATE

FIGURE EC-3

NOTES:

1. AN OAT OR WHEAT COMPANION OR NURSE CROP MAY BE USED WITH ANY OF THE ABOVE PERMANENT SEEDING MIXTURES, AT THE FOLLOWING RATES:
   (A) SPRING OATS – ONE-FOURTH TO THREE-FOURTHS BUSHEL PER ACRE
   (B) WHEAT – NO MORE THAN ONE-HALF BUSHEL PER ACRE
2. A HIGH POTENTIAL FOR FERTILIZER, SEED, AND MULCH TO WASH EXISTS ON STEEP BANKS, CUTS, AND IN CHANNELS AND AREAS OF CONCENTRATED

INSTALLATION

1. GRADE THE SITE TO ACHIEVE POSITIVE DRAINAGE.
2. ADD TOPSOIL OR COMPOST MULCH TO ACHIEVE NEEDED DEPTH FOR ESTABLISHMENT OF VEGETATION. (COMPOST MATERIAL MAY BE ADDED TO IMPROVE SOIL MOISTURE HOLDING CAPACITY, SOIL FRIABILITY, AND NUTRIENT AVAILABILITY.)

SEEDBED PREPARATION

1. TEST SOIL TO DETERMINE PH AND NUTRIENT LEVELS.
2. APPLY SOIL AMENDMENTS AS RECOMMENDED BY THE SOIL TEST AND WORK INTO THE UPPER TWO TO FOUR INCHES OF SOIL. IF TESTING IS NOT DONE, APPLY 400 TO 600 POUNDS PER ACRE OF 12-12-12 ANALYSIS FERTILIZER, OR EQUIVALENT.
3. TILL THE SOIL TO OBTAIN A UNIFORM SEEDBED. USE A DISK OR RAKE, OPERATED ACROSS THE SLOPE, TO WORK THE SOIL AMENDMENTS INTO THE UPPER TWO TO FOUR INCHES OF THE SOIL.

SEEDING

OPTIMUM SEEDING DATES ARE MARCH 1 TO MAY 10 AND AUGUST 10 TO SEPTEMBER 30. PERMANENT SEEDING DONE BETWEEN MAY 10 AND AUGUST 10 MAY NEED TO BE IRRIGATED. SEEDING OUTSIDE OR BEYOND OPTIMUM SEEDING DATES IS STILL POSSIBLE WITH THE UNDERSTANDING THAT RESEEDING OR OVERSEEDING MAY BE REQUIRED IF ADEQUATE SURFACE COVER IS NOT ACHIEVED. RESEEDING OR OVERSEEDING CAN BE EASILY ACCOMPLISHED IF THE SOIL SURFACE REMAINS WELL PROTECTED WITH MULCH.

1. SELECT A SEEDING MIXTURE AND RATE FROM TABLE 1. SELECT SEED MIXTURE BASED ON SITE CONDITIONS, SOIL PH, INTENDED LAND USE, AND EXPECTED LEVEL OF MAINTENANCE.
2. APPLY SEED UNIFORMLY WITH A DRILL OR CULTIPACKER SEEDER OR BY BROADCASTING. PLANT OR COVER THE SEED TO A DEPTH OF ONE-FOURTH TO ONE-HALF INCH. IF DRILLING OR BROADCASTING THE SEED, ENSURE GOOD SEED-TO-SOIL CONTACT BY FIRMING THE SEEDBED WITH A ROLLER OR CULTIPACKER AFTER COMPLETING SEEDING OPERATIONS. (IF SEEDING IS DONE WITH A HYDROSEEDER, FERTILIZER AND MULCH CAN BE APPLIED WITH THE SEED IN A SLURRY MIXTURE.)
3. MULCH ALL SEEDED AREAS AND USE APPROPRIATE METHODS TO ANCHOR THE MULCH IN PLACE. CONSIDER USING EROSION CONTROL BLANKETS ON SLOPING AREAS AND CONVEYANCE CHANNELS

MAINTENANCE

- INSPECT WITHIN 24 HOURS OF EACH RAIN EVENT AND AT LEAST ONCE EVERY SEVEN CALENDAR DAYS UNTIL THE VEGETATION IS SUCCESSFULLY ESTABLISHED.
- CHARACTERISTICS OF A SUCCESSFUL STAND INCLUDE VIGOROUS DARK GREEN OR BLUISHGREEN SEEDLINGS WITH A UNIFORM VEGETATIVE COVER DENSITY OF 90 PERCENT OR MORE.
- CHECK FOR EROSION OR MOVEMENT OF MULCH.
- REPAIR DAMAGED, BARE, GULLIED, OR SPARSELY VEGETATED AREAS AND THEN FERTILIZE, RESEED, AND APPLY AND ANCHOR MULCH.
- IF PLANT COVER IS SPARSE OR PATCHY, EVALUATE THE PLANT MATERIALS CHOSEN, SOIL FERTILITY, MOISTURE CONDITION, AND MULCH APPLICATION; REPAIR AFFECTED AREAS EITHER BY OVERSEEDING OR PREPARING A NEW SEEDBED AND RESEEDING. APPLY AND ANCHOR MULCH ON THE NEWLY SEEDED AREAS.
- IF VEGETATION FAILS TO GROW, CONSIDER SOIL TESTING TO DETERMINE SOIL PH OR NUTRIENT DEFICIENCY PROBLEMS. (CONTACT YOUR SOIL AND WATER CONSERVATION DISTRICT OR COOPERATIVE EXTENSION OFFICE FOR ASSISTANCE.)
- IF ADDITIONAL FERTILIZATION IS NEEDED TO GET A SATISFACTORY STAND, DO SO ACCORDING TO SOIL TEST RECOMMENDATIONS.
- ADD FERTILIZER THE FOLLOWING GROWING SEASON. FERTILIZE ACCORDING TO SOIL TEST RECOMMENDATIONS.
- FERTILIZE TURF AREAS ANNUALLY. APPLY FERTILIZER IN A SPLIT APPLICATION. FOR COOL-SEASON GRASSES, APPLY ONE-HALF OF THE FERTILIZER IN LATE SPRING AND ONE HALF IN EARLY FALL. FOR WARM-SEASON GRASSES, APPLY ONE-THIRD IN EARLY SPRING, ONE-THIRD IN LATE SPRING, AND THE REMAINING ONE-THIRD IN MIDDLE SUMMER.

TABLE 1. PERMANENT SEEDING RECOMMENDATIONS
THIS TABLE PROVIDES SEVERAL SEED MIXTURE OPTIONS. ADDITIONAL SEED MIXTURES ARE AVAILABLE COMMERCIALLY. WHEN SELECTING A MIXTURE, CONSIDER INTENDED LAND USE AND SITE CONDITIONS, INCLUDING SOIL PROPERTIES (E.G., SOIL PH AND DRAINAGE), SLOPE ASPECT, AND THE TOLERANCE OF EACH SPECIES TO SHADE AND DROUGHT.

REFERENCE IN CHAPTER 7 PAGES 35-40 IN THE INDIANA STORM WATER QUALITY MANUAL

PERMANENT SEED

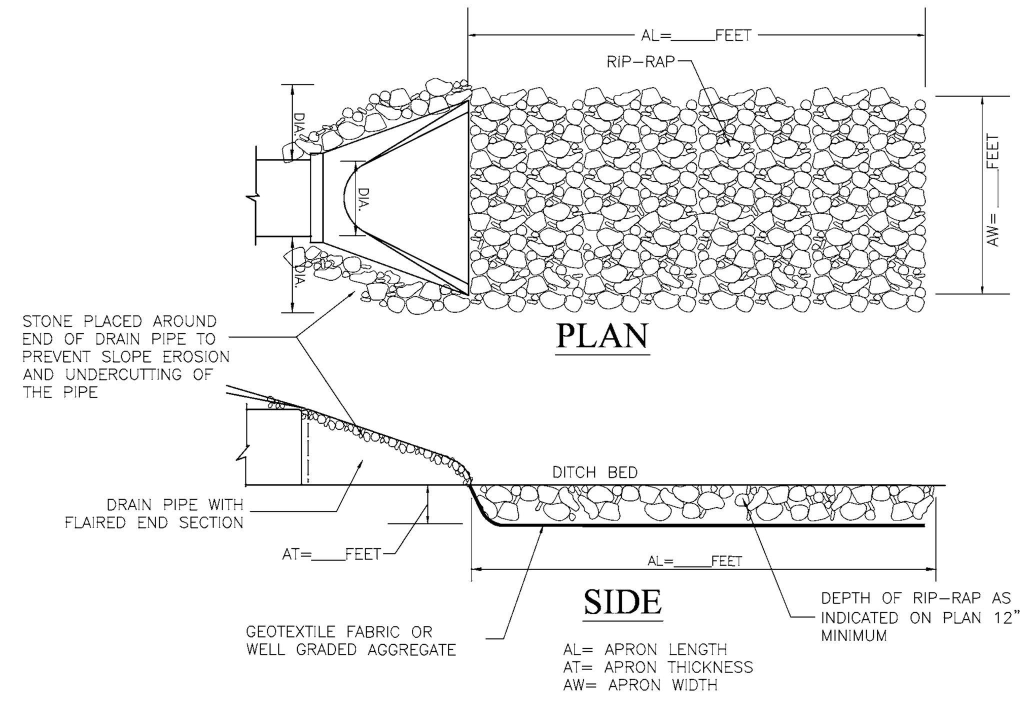

AT=1.5' X D50 15" OR LESS, 1.2' X D50 15" OR LARGER STONE.

TABLE 1. SIZING FOR FLOW DISSIPATERS AT CULVERT PIPE OUTLETS

PIPE SIZE	AVERAGE RIPRAP DIAMETER (D50)	APRON WIDTH	APRON LENGTH
8 IN.	3 IN.	2 TO 3 FEET	5 TO 7 FEET
12 IN.	5 IN.	3 TO 4 FEET	6 TO 12 FEET
18 IN.	8 IN.	4 TO 6 FEET	8 TO 18 FEET
24 IN.	10 IN.	6 TO 8 FEET	12 TO 22 FEET
30 IN.	12 IN.	8 TO 10 FEET	14 TO 28 FEET
36 IN.	14 IN.	10 TO 12 FEET	16 TO 32 FEET

ENERGY DISSIPATER (OUTLET PROTECTION)

1. DIVERT SURFACE WATER RUNOFF AROUND THE STRUCTURE DURING CONSTRUCTION SO THAT THE SITE CAN BE PROPERLY DEWATERED FOR FOUNDATION PREPARATION.
2. EXCAVATE FOUNDATION AND APRON AREA SUBGRADES BELOW DESIGN ELEVATION TO ALLOW FOR THICKNESS OF THE FILTER MEDIUM AND RIPRAP.
3. COMPACT ANY FILL USED IN SUBGRADE PREPARATION TO THE DENSITY OF SURROUNDING UNDISTURBED SOIL MATERIAL.
4. SMOOTH SUBGRADE ENOUGH TO PROTECT GEOTEXTILE FABRIC FROM TEARING.
5. PLACE GEOTEXTILE FABRIC OR AGGREGATE BEDDING MATERIAL (FOR STABILIZATION AND FILTRATION) ON THE COMPACTED AND SMOOTHED FOUNDATION.
6. INSTALL RIPRAP TO THE LINES AND ELEVATIONS SHOWN IN THE CONSTRUCTION PLANS. BLEND RIPRAP SMOOTHLY TO SURROUNDING GRADE. IF THE CHANNEL IS WELL DEFINED, EXTEND THE APRON ACROSS THE CHANNEL BOTTOM AND UP THE CHANNEL BANKS TO AN ELEVATION OF SIX INCHES ABOVE THE MAXIMUM TAILWATER DEPTH OR TO THE TOP OF THE BANK, WHICHEVER IS LESS.
7. IF GEOTEXTILE FABRIC TEARS WHEN PLACING RIPRAP, REPAIR IMMEDIATELY BY LAYING AND STAPLING A PIECE OF FABRIC OVER DAMAGED AREA, OVERLAPPING THE UNDAMAGED AREAS BY AT LEAST 12 INCHES.
8. CONSTRUCT A SMALL PLUNGE POOL WITHIN THE OUTLET APRON. (RIPRAP APRONS MUST BE LEVEL WITH OR SLIGHTLY LOWER THAN THE RECEIVING CHANNEL AND SHOULD NOT PRODUCE AN OVERFALL OR RESTRICT FLOW OF THE WATER CONVEYANCE STRUCTURE.)

MAINTENANCE

- INSPECT WITHIN 24 HOURS OF A RAIN EVENT AND AT LEAST ONCE EVERY SEVEN CALENDAR DAYS.
- INSPECT FOR STONE DISPLACEMENT; REPLACE STONES ENSURING PLACEMENT AT FINISHED GRADE.
- CHECK FOR EROSION OR SCOURING AROUND SIDES OF THE APRON; REPAIR IMMEDIATELY.
- CHECK FOR PIPING OR UNDERCUTTING; REPAIR IMMEDIATELY.

REFERENCE IN CHAPTER 7 PAGE 121 IN THE INDIANA STORM WATER QUALITY MANUAL

OUTLET EROSION CONTROL PROTECTION

(NO SCALE)

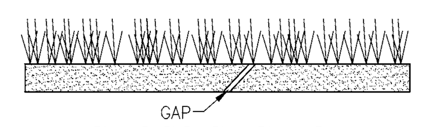

CROSS SECTION

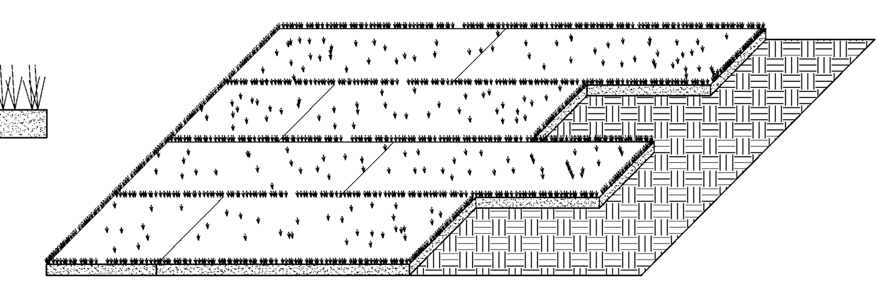

PERSPECTIVE VIEW

(NO SCALE)

SPECIFICATIONS:

SITE PREPARATION

- GRADE THE SITE TO ACHIEVE POSITIVE DRAINAGE.
- PREPARE A SMOOTH, FIRM SOIL SURFACE AND APPLY SOIL AMENDMENTS. IRRIGATION IRRIGATE AS NEEDED TO ENSURE ROOTING OF SOD.

MATERIALS

- SOIL AMENDMENTS – SELECT MATERIALS AND RATES AS DETERMINED BY A SOIL TEST (CONTACT YOUR COUNTY SOIL AND WATER CONSERVATION DISTRICT OR COOPERATIVE EXTENSION OFFICE FOR ASSISTANCE AND SOIL INFORMATION, INCLUDING AVAILABLE SOIL TESTING SERVICES.) OR 400 TO 600 POUNDS OF 12-12-12 ANALYSIS FERTILIZER, OR EQUIVALENT.
- SOD – SELECT A HIGH QUALITY, HEALTHY, VIGOROUS VARIETY WELL ADAPTED TO THE REGION AND COMPATIBLE WITH THE INTENDED USE.

INSTALLATION

SOD SHOULD NOT BE INSTALLED DURING HOT WEATHER, ON DRY SOIL, FROZEN SOIL, COMPACTED CLAY, LOOSE SAND OR GRAVELLY SUBSTRATE SOILS, AGGREGATE, OR PESTICIDE TREATED SOIL. THE IDEAL TIME TO LAY SOD IS MAY 1 TO JUNE 1 OR SEPTEMBER 1 TO SEPTEMBER 30, ALTHOUGH IT CAN BE INSTALLED AS EARLY AS MARCH 15 IF AVAILABLE OR JUNE 1 TO SEPTEMBER 1 IF IRRIGATED.

SITE PREPARATION

1. APPLY TOPSOIL IF EXISTING SOIL CONDITIONS ARE UNSUITABLE FOR ESTABLISHING VEGETATION.
2. GRADE THE SITE TO ACHIEVE POSITIVE DRAINAGE AND CREATE A SMOOTH, FIRM SOIL SURFACE.
3. WHERE APPLICABLE, USE A CHISEL PLOW, DISK, HARROW, OR RAKE TO BREAK UP COMPACTED SOILS AND CREATE A FAVORABLE ROOTING DEPTH OF SIX TO EIGHT INCHES.

SOD BED PREPARATION

1. TEST SOIL TO DETERMINE PH AND NUTRIENT LEVELS.
2. IF SOIL PH IS TOO ACIDIC FOR THE GRASS SOD TO BE INSTALLED, APPLY LIME ACCORDING TO SOIL TEST RESULTS OR AT THE RATE RECOMMENDED BY THE SOD SUPPLIER.
3. APPLY FERTILIZER AS RECOMMENDED BY THE SOIL TEST. IF TESTING WAS NOT DONE, APPLY 400 TO 600 POUNDS PER ACRE OF 12-12-12 ANALYSIS FERTILIZER, OR EQUIVALENT.
4. WORK THE SOIL AMENDMENTS INTO THE UPPER TWO TO FOUR INCHES OF SOIL WITH A DISK OR RAKE OPERATED ACROSS THE SLOPE.
5. RAKE OR HARROW THE AREA TO ACHIEVE A SMOOTH FINAL GRADE AND THEN ROLL OR CULTIPACK THE SOIL SURFACE TO CREATE A FIRM SURFACE ON WHICH TO LAY THE SOD.

LAYING THE SOD

1. INSTALL SOD WITHIN THIRTY-SIX HOURS OF ITS CUTTING.
2. STORE THE SOD IN A SHADED LOCATION DURING INSTALLATION.
3. IMMEDIATELY BEFORE LAYING THE SOD, RAKE THE SOIL SURFACE TO BREAK ANY CRUST. (IF THE WEATHER IS HOT, LIGHTLY IRRIGATE THE SOIL SURFACE PRIOR TO LAYING THE SOD.)
4. LAY SOD STRIPS IN A BRICK-LIKE PATTERN.
5. BUTT ALL JOINTS TIGHTLY AGAINST EACH OTHER (DO NOT STRETCH OR OVERLAP THEM), USING A KNIFE OR MASON'S TROWEL TO TRIM AND FIT SOD INTO IRREGULARLY SHAPED AREAS.
6. ROLL THE SOD LIGHTLY AFTER INSTALLATION TO ENSURE FIRM CONTACT BETWEEN THE SOD AND SOIL.
7. IRRIGATE NEWLY SODDED AREAS UNTIL THE UNDERLYING SOIL IS WET TO A DEPTH OF FOUR INCHES, AND THEN KEEP MOIST UNTIL THE GRASS TAKES ROOT.

SLOPE APPLICATION

1. INSTALL THE SOD STRIPS WITH THE LONGEST DIMENSION PERPENDICULAR TO THE SLOPE.
2. WHERE SLOPES EXCEED A RATIO OF 3:1, STAPLE OR STAKE EACH STRIP AT THE CORNERS AND IN THE MIDDLE.

CHANNEL APPLICATION

(SODDING PROVIDES QUICKER PROTECTION THAN SEEDING AND MAY REDUCE THE RISK OF EARLY WASHOUT.)

1. EXCAVATE THE CHANNEL, ALLOWING FOR THE FULL THICKNESS OF THE SOD.
2. LAY THE SOD STRIPS WITH THE LONGEST DIMENSION PERPENDICULAR TO CHANNEL FLOW.
3. STAPLE OR STAKE EACH STRIP OF SOD AT THE CORNERS AND IN THE MIDDLE.
4. STAPLE JUTE OR BIODEGRADABLE POLYPROPYLENE NETTING OVER THE SODDED AREA TO MINIMIZE THE POTENTIAL FOR WASHOUT DURING ESTABLISHMENT.

MAINTENANCE

- INSPECT WITHIN 24 HOURS OF EACH RAIN EVENT AND AT LEAST ONCE EVERY SEVEN CALENDER DAYS UNTIL SOD IS WELL ROOTED.
- KEEP SOD MOIST UNTIL FULLY ROOTED.
- AFTER SOD IS WELL-ROOTED (TWO TO THREE WEEKS), MAINTAIN A PLANT HEIGHT OF TWO TO THREE INCHES.
- TIME MOWING TO AVOID RUTS IN TURF.
- FERTILIZE TURF AREAS ANNUALLY. APPLY FERTILIZER IN A SPLIT APPLICATION. FOR COOLSEASON GRASSES, APPLY ONE-HALF OF THE FERTILIZER IN LATE SPRING AND ONE-HALF IN EARLY FALL. FOR WARM-SEASON GRASSES, APPLY ONE-THIRD IN EARLY SPRING, ONE-THIRD IN LATE SPRING AND ONE-THIRD IN MID-SUMMER.

REFERENCE IN CHAPTER 7 PAGES 47-50 IN THE INDIANA STORM WATER QUALITY MANUAL

SOD APPLICATION DETAIL

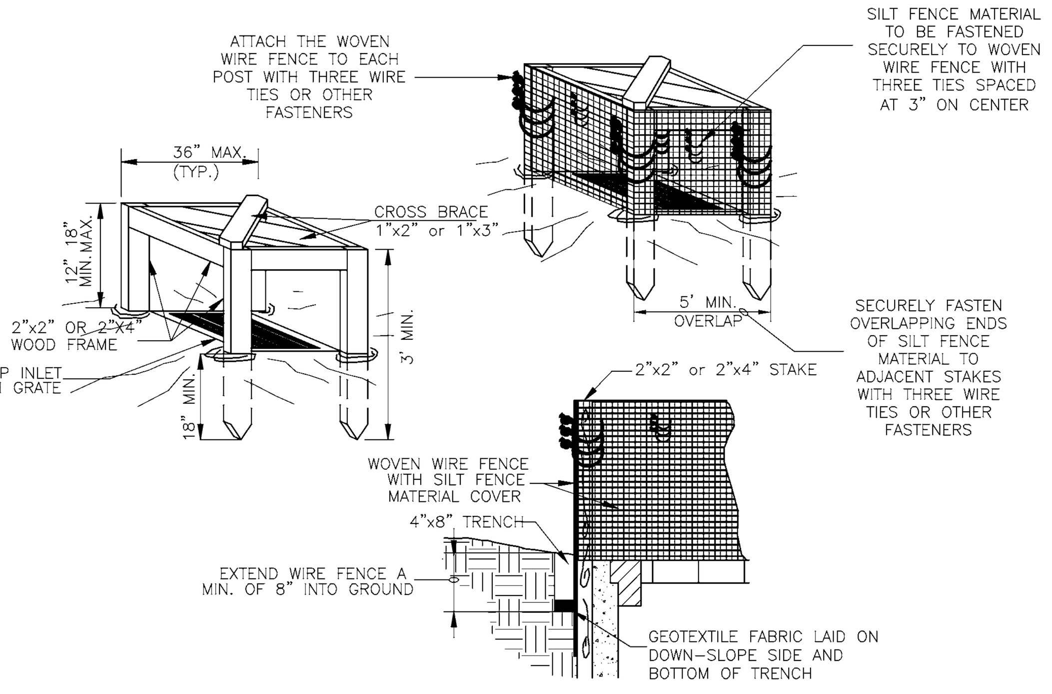

POSTS: 2 X 4 WOODEN STAKE
FENCE: WOVEN WIRE, 14-1/2 GA., 6" MAX. MESH OPENING
FABRIC: IN ACCORDANCE WITH ASTM D 6461 LATEST EDITION.

INSTALLATION

1. DIG AN EIGHT-INCH DEEP, FOUR-INCH WIDE TRENCH AROUND THE PERIMETER OF THE INLET.
2. IF USING PRE-ASSEMBLED GEOTEXTILE FABRIC AND POSTS, DRIVE THE POSTS INTO THE SOIL, TIGHTLY STRETCHING THE GEOTEXTILE FABRIC BETWEEN POSTS AS EACH IS DRIVEN.
   (POSTS MUST BE PLACED ON THE INLET SIDE OF THE ANCHOR TRENCH WITH THE GEOTEXTILE FABRIC ON THE SIDE OF THE TRENCH FARTHEST FROM THE INLET.)

NOTE: IF ASSEMBLING THE GEOTEXTILE FABRIC AND POSTS ON-SITE, DRIVE THE POSTS INTO THE SOIL AND THEN SECURE THE GEOTEXTILE FABRIC TO THE POSTS BY PLACING A PIECE OF LATHE OVER THE FABRIC AND FASTENING IT TO THE POST (STRETCHING THE FABRIC BETWEEN POSTS AS IT IS FASTENED).

3. USE THE WRAP JOIN METHOD WHEN JOINING POSTS.
4. PLACE THE BOTTOM 12 INCHES OF GEOTEXTILE FABRIC INTO THE EIGHT-INCH DEEP TRENCH, LAYING THE REMAINING FOUR INCHES IN THE BOTTOM OF THE TRENCH AND EXTENDING AWAY FROM THE INLET.
5. BACKFILL THE TRENCH WITH SOIL MATERIAL AND COMPACT IT IN PLACE.
6. BRACE THE POSTS BY NAILING BRACES INTO EACH CORNER POST OR UTILIZE RIGID PANELS TO SUPPORT FABRIC.

NOTE: IN SITUATIONS WHERE STORM WATER MAY BYPASS THE STRUCTURE, EITHER:
SET THE TOP OF THE GEOTEXTILE FABRIC FILTER AT LEAST SIX INCHES LOWER THAN THE GROUND ELEVATION ON THE DOWN-SLOPE SIDE OF THE STORM DRAIN INLET, BUILD A TEMPORARY DIKE, COMPACTED TO SIX INCHES HIGHER THAN THE FABRIC, ON THE DOWN-SLOPE SIDE OF THE STORM DRAIN INLET, AND/OR USE IN CONJUNCTION WITH EXCAVATED DROP INLET PROTECTION.

MAINTENANCE

- INSPECT DAILY.
- INSPECT GEOTEXTILE FABRIC AND MAKE NEEDED REPAIRS IMMEDIATELY.
- REMOVE SEDIMENT FROM POOL AREA TO PROVIDE STORAGE FOR THE NEXT STORM EVENT. AVOID DAMAGING OR UNDERCUTTING FABRIC DURING SEDIMENT REMOVAL.
- WHEN CONTRIBUTING DRAINAGE AREA HAS BEEN STABILIZED, REMOVE SEDIMENT, PROPERLY DISPOSE OF ALL CONSTRUCTION MATERIAL, GRADE AREA TO THE ELEVATION OF THE STORM DRAIN INLET TOP, THEN STABILIZE IMMEDIATELY.

REFERENCED IN CHAPTER 7 PAGE 153-157 IN THE INDIANA STORM WATER QUALITY MANUAL.

SILT FENCE INLET PROTECTION

FOR NON PAVED AREAS (NO SCALE)

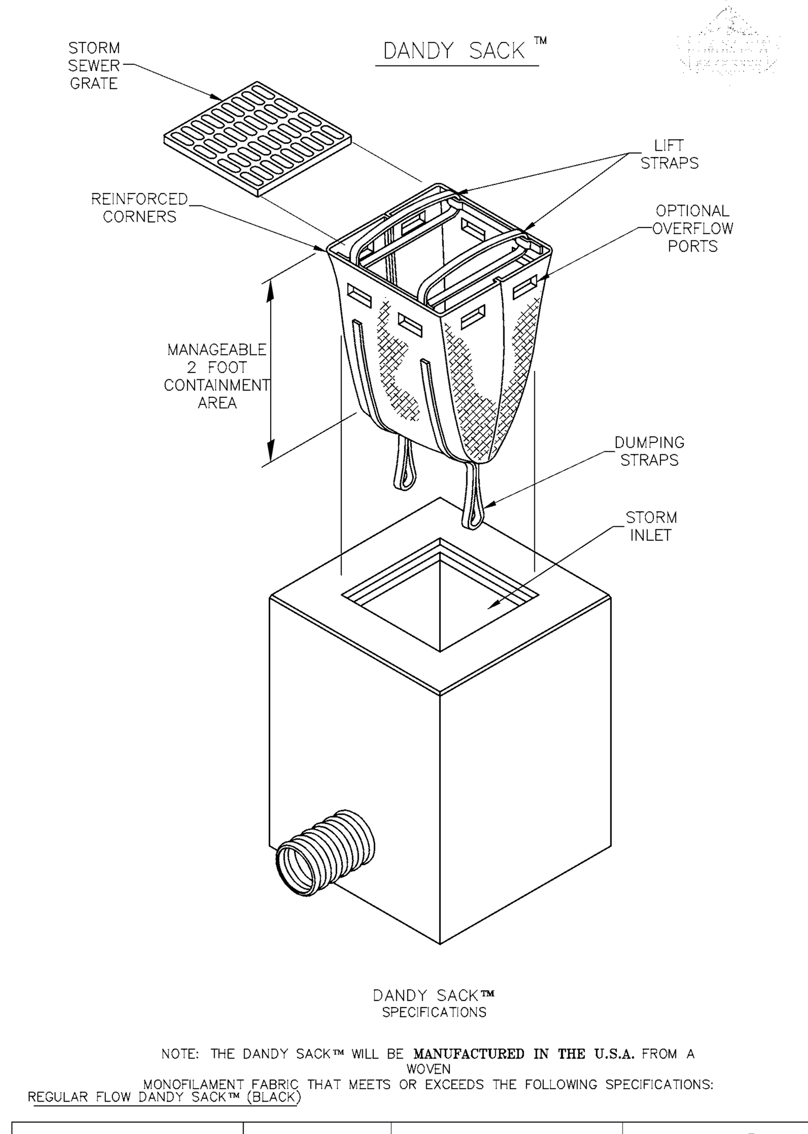

DANDY SACK™ SPECIFICATIONS

NOTE: THE DANDY SACK™ WILL BE **MANUFACTURED IN THE U.S.A.** FROM A WOVEN MONOFILAMENT FABRIC THAT MEETS OR EXCEEDS THE FOLLOWING SPECIFICATIONS:

REGULAR FLOW DANDY SACK™ (BLACK)

Mechanical Properties	Test Method	Units	MARV
Grab Tensile Strength	ASTM D 4632	kN (lbs)	1.78 (400) x 1.40 (315)
Grab Tensile Elongation	ASTM D 4632	%	15 x 15
Puncture Strength	ASTM D 4833	kN (lbs)	0.67 (150)
Mullen Burst Strength	ASTM D 3786	kPa (psi)	5506 (800)
Trapezoid Tear Strength	ASTM D 4533	kN (lbs)	0.67 (150) x 0.73 (165)
UV Resistence	ASTM D 4355	%	90
Apparent Opening Size	ASTM D 4751	Mm (US Std Sieve)	0.425 (40)
Flow Rate	ASTM D 4491	1/min/m² (gal/min/ft²)	2852 (70)
Permittivity	ASTM D 4491	Sec⁻¹	0.90

*Note: All Dandy Sacks™ can be ordered with our optional oil absorbent pillows

HI-FLOW DANDY SACK™ (SAFETY ORANGE)

Mechanical Properties	Test Method	Units	MARV
Grab Tensile Strength	ASTM D 4632	kN (lbs)	1.62 (365) X 0.89 (200)
Grab Tensile Elongation	ASTM D 4632	%	24 X 10
Puncture Strength	ASTM D 4833	kN (lbs)	0.40 (90)
Mullen Burst Strength	ASTM D 3786	kPa (psi)	3097 (450)
Trapezoid Tear Strength	ASTM D 4533	kN (lbs)	0.51 (115) X 0.33 (75)
UV Resistence	ASTM D 4355	%	90
Apparent Opening Size	ASTM D 4751	Mm (US Std Sieve)	0.425 (40)
Flow Rate	ASTM D 4491	1/min/m² (gal/min/ft²)	5907 (145)
Permittivity	ASTM D 4491	Sec⁻¹	2.1

DETAIL OF INLET SEDIMENT CONTROL DEVICE

(NO SCALE)

811 Know what's below. Call before you dig.

Within Indiana Call
811 or 800-382-5544
24 Hours a Day, 7 Days a Week.

PER INDIANA STATE LAW IC 8-1-26. IT IS AGAINST THE LAW TO EXCAVATE WITHOUT NOTIFYING THE UNDERGROUND LOCATION SERVICE TWO (2) WORKING DAYS BEFORE COMMENCING WORK.

PRELIMINARY CONSTRUCTION PLANS

10505 N. College Avenue
Indianapolis, Indiana 46280
weihe.net
317 | 846 - 6611
800 | 452 - 6408
317 | 843 - 0546 fax
ALLAN H. WEIHE, P.E., L.S. - FOUNDER

WEIHE ENGINEERS
Land Surveying | Civil Engineering
Landscape Architecture

PROJECT NO.: W12.0262
DWG NAME: 120262-C201 det.dwg
DESIGNED BY: EAC/MG
DRAWN BY: EAC/MG
CHECKED BY: JKS
DATE: 06.29.2012

DATE	BY	REVISIONS AND ISSUES

JAMES K. SHINNEMAN REGISTERED No. 10200392 STATE OF INDIANA PROFESSIONAL ENGINEER — APPROVAL PENDING NOT FOR CONSTRUCTION

JAMES K. SHINNEMAN P.E. 10200392

PREPARED FOR:
EPIPHANY EVANGELICAL LUTHERAN CHURCH PHASE ONE
156TH AND DITCH ROAD, WESTFIELD IN

SWPPP (PHASE II) DETAILS
Part of the SE Corner of SW/1/4 of Section 10, Township 18 North, Range 3 East, Washington Township, Hamilton County, Indiana

SHEET NO. C204

PROJECT NO. W12.0262

LOCATION: H:\2012\w120262\Engineering\design\conset\120262-C201 det.dwg
LAYOUT: C204 - SWPPP 2 DETAILS
DATE/TIME: June 29, 2012 - 8:00am
PLOTTED BY: cartere

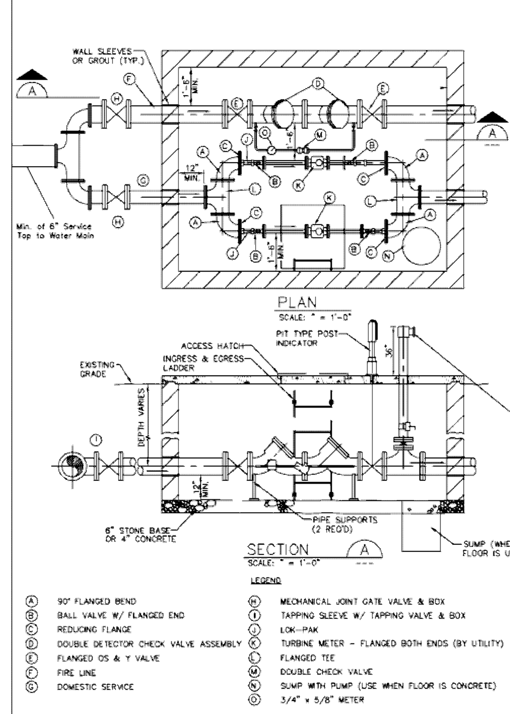

LEGEND

- (A) 90° FLANGED BEND
- (B) BALL VALVE W/ FLANGED END
- (C) REDUCING FLANGE
- (D) DOUBLE DETECTOR CHECK VALVE ASSEMBLY
- (E) FLANGED OS & Y VALVE
- (F) FIRE LINE
- (G) DOMESTIC SERVICE
- (H) MECHANICAL JOINT GATE VALVE & BOX
- (I) TAPPING SLEEVE W/ TAPPING VALVE & BOX
- (J) LOK-PAK
- (K) TURBINE METER – FLANGED BOTH ENDS (BY UTILITY)
- (L) FLANGED TEE
- (M) DOUBLE CHECK VALVE
- (N) SUMP WITH PUMP (USE WHEN FLOOR IS CONCRETE)
- (O) 3/4" x 5/8" METER

NOTES:

1. CUSTOMER SHALL CONSTRUCT METER VAULT.
2. CONSTRUCTION MATERIALS: CONCRETE, 8"x8"x16" CONCRETE BLOCKS AND MORTAR, OR PRECAST/CAST-IN-PLACE AS DIRECTED BY WATER COMPANY.
3. INSIDE DIMENSIONS PER DRAWING NOTES. VAULT TO BE SET LENGTHWISE WITH SERVICE.
4. TOP OF VAULT TO BE CONCRETE, AT LEAST 4" THICK WITH REINFORCING. WHEN VAULT IS CONSTRUCTED IN PAVED AREAS, PAVEMENT IS TO BE LEVEL WITH TOP OF VAULT, AND THE TOP REINFORCED AS REQUIRED TO SUPPORT TRAFFIC LOADS. WHEN VAULT IS CONSTRUCTED IN GRASS PLOT, TOP OF VAULT SHALL CORRESPOND WITH FINISHED GRADE LEVEL OF SURROUNDING AREA.
5. BOTTOM OF VAULT TO BE MINIMUM OF 6" OF CRUSHED STONE OR 4" CONCRETE AS DIRECTED BY WATER COMPANY, WITH MINIMUM CLEARANCE OF 12" BELOW BOTTOM OF FIRE/SERVICE LINE.
6. CUSTOMER SHALL FURNISH 2" BALL VALVES ON OUTLET SIDE OF THE 2" METER SETTING.
7. CUSTOMER SHALL FURNISH DOUBLE DETECTOR CHECK VALVE AS APPROVED BY THE INDIANA DEPARTMENT OF ENVIRONMENTAL MANAGEMENT, WITH RESILIENT SEAL GATE VALVE ON OUTLET SIDE OF CHECK VALVE. METER IS FURNISHED BY WATER COMPANY.
8. CUSTOMER SHALL FURNISH VAULT FRAME AND LID TO BE INSTALLED IN TOP OF VAULT BY CUSTOMER (BILCO J-2AL OR 30"x30" ALUMINUM PCM)
9. CUSTOMER SHOULD INSTALL A LADDER IN PIT FOR INGRESS AND EGRESS, AS PER OSHA REQUIREMENTS.
10. A 2" TEST PLUG SHALL BE INSTALLED AT LEAST 2 PIPE DIAMETERS DOWNSTREAM OF 2" OR LARGER METERS.

SIAMESE FITTING WITH TWO 2 1/2" HOSE CONNECTORS IN WESTFIELD FIRE DEPT. DISTRICT

5" STORZ CONNECTION FOR HOSE CONNECTION IN NOBLESVILLE FIRE DEPT. DISTRICT

STANDARD FIRE SERVICE & METER VAULT

TOWN OF WESTFIELD, INDIANA

RENEE LYNN GOFF REGISTERED NO. 10403860 STATE OF INDIANA PROFESSIONAL ENGINEER

Renée Lynn Goff 10/9/06 DATE FIGURE W-13

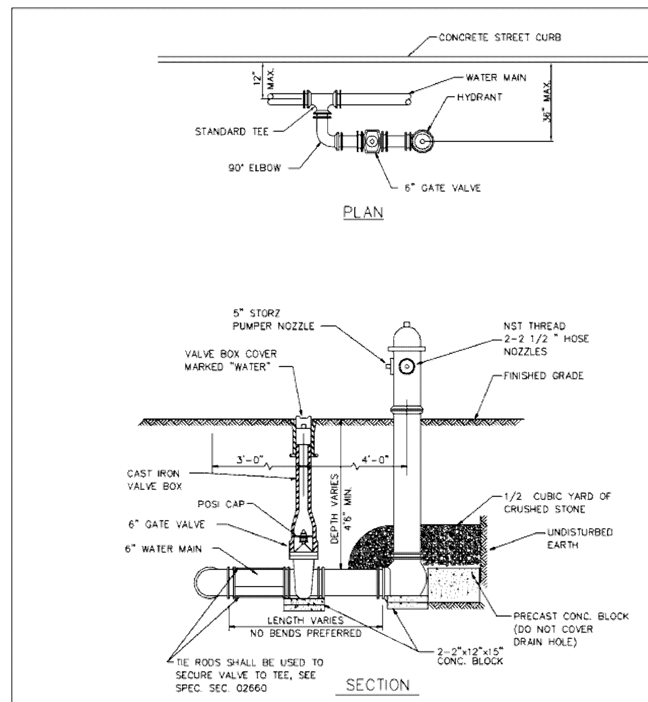

NOTE:

1. HYDRANTS SHALL BE THE MUELLER CENTURION, AS MANUFACTURED BY THE MUELLER CO. OR THE WATEREUS PACER, AS MANUFACTURED BY THE WATEREUS CO.
2. INTEGRAL CAP NUT AND LOWER WASHER SHALL BE EPOXY COATED.
3. SHOE SHALL BE FUSION BONDED EPOXY COATED INSIDE AND OUT.
4. WESTFIELD FIRE HYDRANTS SHALL BE MAB FIRE PROTECTION RED (7068) NOBLESVILLE FIRE HYDRANTS SHALL BE MAB CAUTION YELLOW (7077)

FIRE HYDRANT DETAILS

TOWN OF WESTFIELD, INDIANA

RENEE LYNN GOFF REGISTERED NO. 10403860 STATE OF INDIANA PROFESSIONAL ENGINEER

Renée Lynn Goff 10/9/06 DATE FIGURE W-7

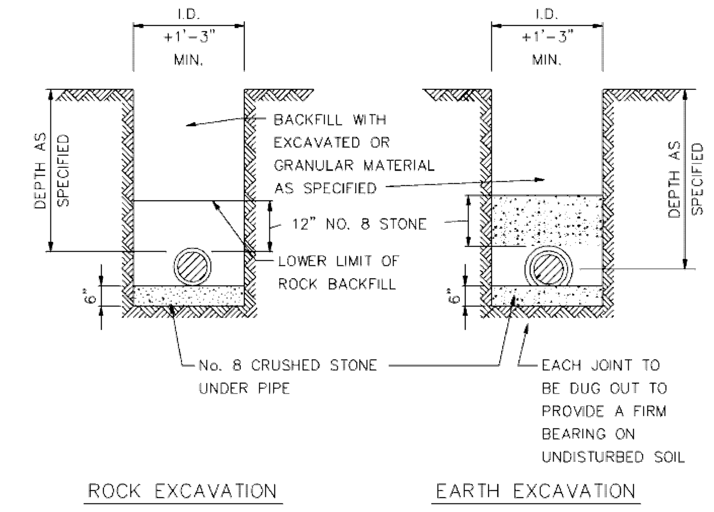

NOTE:
THIS DETAIL SHALL APPLY TO ALL SANITARY SEWER PIPE

SEWER PIPE BEDDING DETAIL

TOWN OF WESTFIELD, INDIANA

RENEE LYNN GOFF REGISTERED NO. 10403860 STATE OF INDIANA PROFESSIONAL ENGINEER

Renée Lynn Goff 10/9/06 DATE FIGURE S-5

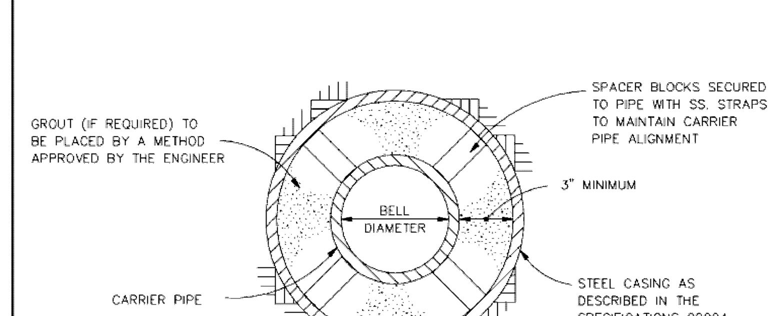

JACKING AND BORING DETAIL

TOWN OF WESTFIELD, INDIANA

RENEE LYNN GOFF REGISTERED NO. 10403860 STATE OF INDIANA PROFESSIONAL ENGINEER

Renée Lynn Goff 10/9/06 DATE FIGURE S-9

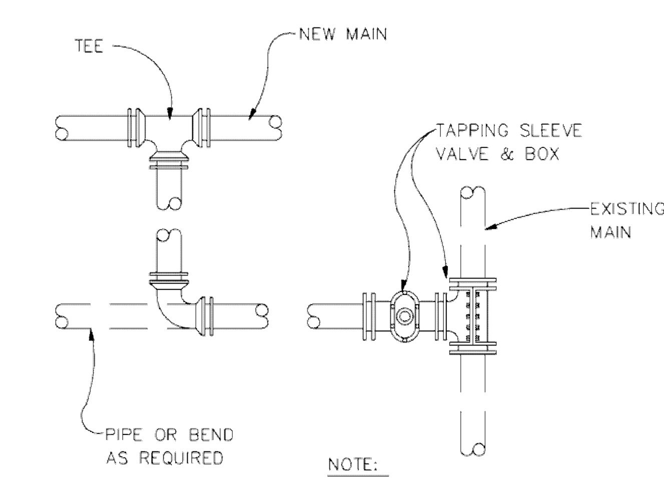

NOTE:

1. BENDS & FITTINGS AS REQUIRED SEE PLAN SHEETS FOR DETAILS
2. SEE FIGURES W-2 & W-3 FOR THRUST BLOCK AND RESTRAINED JOINT DETAILS.

CONNECTION TO EXISTING MAIN

TOWN OF WESTFIELD, INDIANA

RENEE LYNN GOFF REGISTERED NO. 10403860 STATE OF INDIANA PROFESSIONAL ENGINEER

Renée Lynn Goff 10/9/06 DATE FIGURE W-5

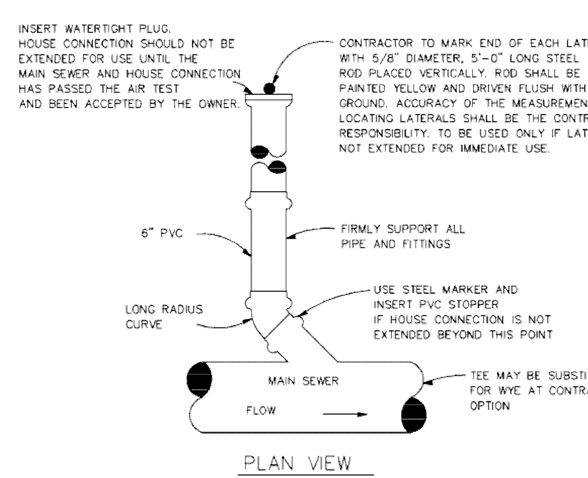

NOTES:

1. WYE BRANCHES OR TEES SHALL BE INSTALLED WHERE DESIRED BY PROPERTY OWNER OR WHERE INDICATED ON THE DRAWINGS. THEY SHALL BE EXTENDED TO PROPERTY LINE OF STREETS OR ALLEYS OR TO DISTANCES AS SHOWN ON THE DESIGN DRAWINGS AND SHALL BE OF 6" PVC SDR 35 UNLESS OTHERWISE SHOWN.
2. DEPTH AT PROPERTY LINE SHALL BE APPROXIMATELY 8'-0" UNLESS SEWER DEPTH IS LESS, IN WHICH EVENT A MINIMUM SLOPE OF 1/8" PER 1'-0" SHALL BE USED.
3. HOUSE SERVICE PIPE SHALL BE PVC SDR 35 CONFORMING TO ASTM D3034 WITH GASKETED JOINTS CONFORMING TO ASTM D3212 UNLESS OTHERWISE INDICATED.
4. HOUSE SERVICE PIPE SHALL BE INSTALLED PER SAME SPECIFICATIONS & DETAIL AS FOR MAIN LINE SEWER.

HOUSE/BUILDING SERVICE CONNECTION DETAIL 1

TOWN OF WESTFIELD, INDIANA

RENEE LYNN GOFF REGISTERED NO. 10403860 STATE OF INDIANA PROFESSIONAL ENGINEER

Renée Lynn Goff 10/9/06 DATE FIGURE S-10

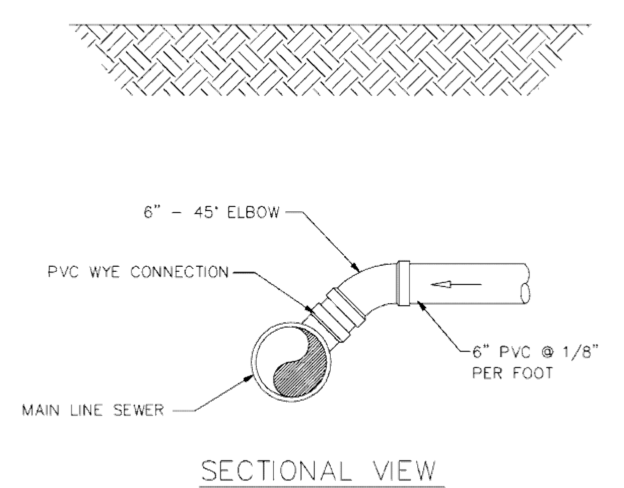

HOUSE/BUILDING SERVICE CONNECTION DETAIL 2

TOWN OF WESTFIELD, INDIANA

RENEE LYNN GOFF REGISTERED NO. 10403860 STATE OF INDIANA PROFESSIONAL ENGINEER

Renée Lynn Goff 10/9/06 DATE FIGURE S-11

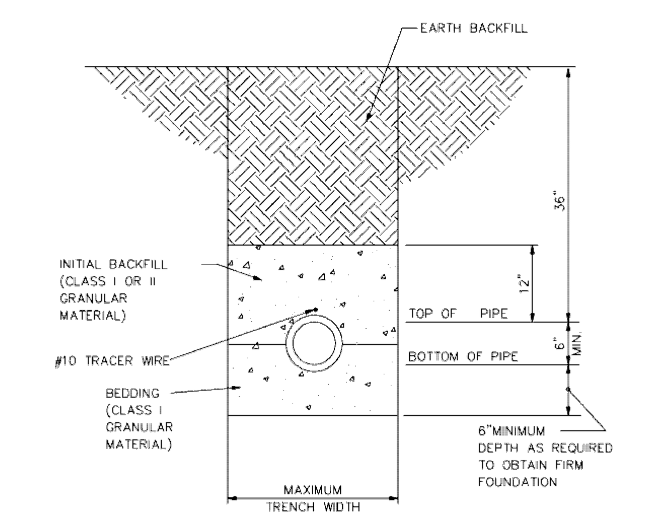

NOTES:

1. NOMINAL PIPE SIZE. (6" MIN.)
2. INSTALLATION OF FLEXIBLE PVC PIPE SHALL BE IN ACCORDANCE WITH SPECIFICATIONS CONTAINED IN ASTM D-2321
3. CLASS I GRANULAR MATERIAL SHALL BE 1/4" TO 1 1/2" GRADED STONE, PER ASTM D2321 (#8 CRUSH STONE)
4. CLASS II GRANULAR MATERIAL SHALL BE COARSE SANDS AND GRAVELS MAX. PARTIAL SIZE OF 3/4"
5. SEE FIGURE S-5 FOR MAIN LINE SEWERS PIPE BEDDING DETAILS.
6. #10 TRACER WIRE TO BE EXTENDED FROM SEWER MAIN TO 6" CLEANOUT RISER

HOUSE/BUILDING SERVICE BEDDING DETAILS

TOWN OF WESTFIELD, INDIANA

RENEE LYNN GOFF REGISTERED NO. 10403860 STATE OF INDIANA PROFESSIONAL ENGINEER

Renée Lynn Goff 10/9/06 DATE FIGURE S-12

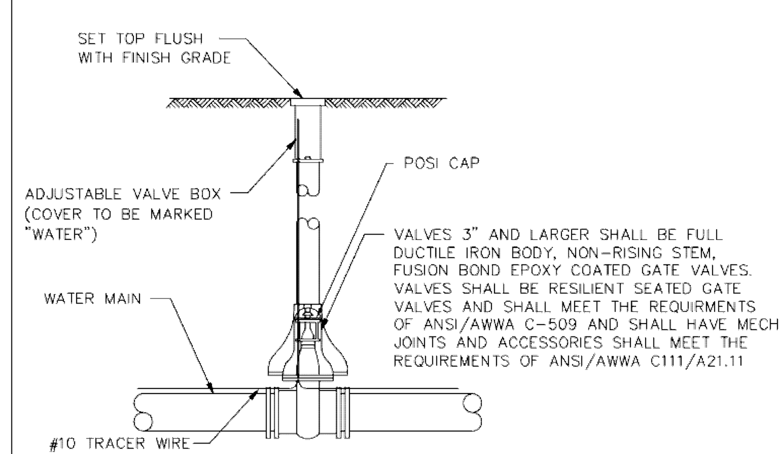

GATE VALVE AND BOX

TOWN OF WESTFIELD, INDIANA

RENEE LYNN GOFF REGISTERED NO. 10403860 STATE OF INDIANA PROFESSIONAL ENGINEER

Renée Lynn Goff 10/9/06 DATE FIGURE W-6

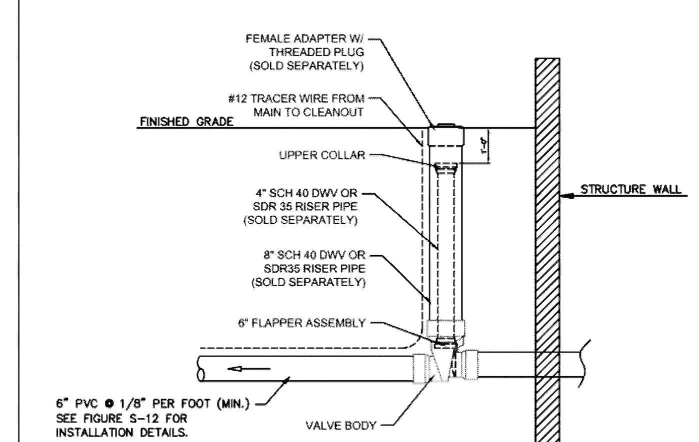

CLEANOUT LOCATIONS:

1. AT THE JUNCTION OF BUILDING DRAIN AND BUILDING SEWER (NEAR EXTERIOR FACE OF BUILDING)
2. IF BUILDING SEWER IS MORE THAN 100 FEET FROM MAIN LINE SEWER, CLEAN-OUTS SPACING SHALL NOT EXCEED 100 FEET.
3. A CLEANOUT IS REQUIRED AT EACH BEND THAT IS GREATER THAN 45 DEGREES.
4. THERE SHALL BE NO BASEMENT DRAINS CONNECTED TO SERVICE CONNECTION

CHECK VALVE REQUIREMENTS

1. ALL HOUSES ARE REQUIRED TO HAVE A CHECK VALVE
2. NO CHECK VALVES ARE TO BE LOCATED IN THE BASEMENT
3. USE RECTORSEAL, CANPLAS OR APPROVED EQUAL

GENERAL REQUIREMENTS

THE LOWEST FLOOR ELEVATION RECEIVING GRAVITY SERVICE MUST BE A MIN.THREE (3.0) FEET ABOVE TOP NEAREST MANHOLE RIM.

HOUSE/BUILDING SERVICE CLEAN-OUT/CHECK VALVE DETAIL

CITY OF WESTFIELD, INDIANA

City of Westfield Public Works

NEIL B. VANTREES REGISTERED NO. 10809092 STATE OF INDIANA PROFESSIONAL ENGINEER

Neil B. VanTrees 8/26/2011 FIGURE S-13

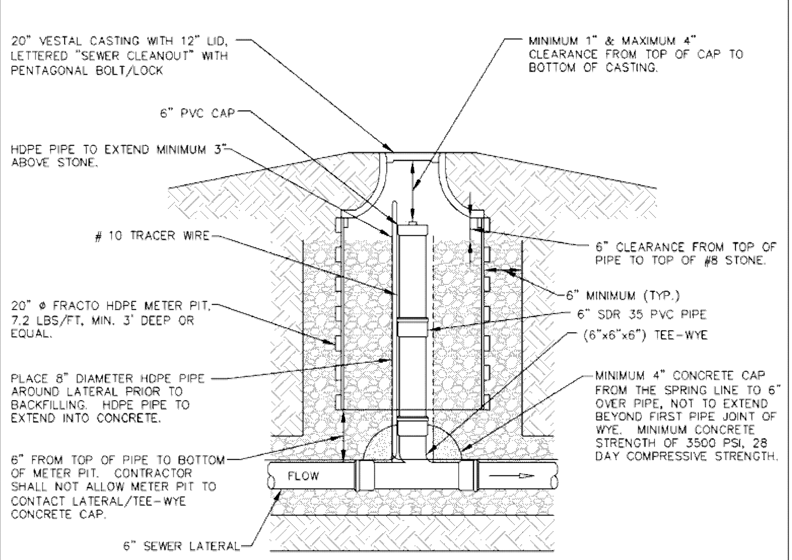

*WHEN REQUIRED BY WESTFIELD PUBLIC WORKS

DRAWING NOT TO SCALE

TYPE 2 CLEAN-OUT DETAIL

TOWN OF WESTFIELD, INDIANA

RENEE LYNN GOFF REGISTERED NO. 10403860 STATE OF INDIANA PROFESSIONAL ENGINEER

Renée Lynn Goff 10/9/06 DATE FIGURE S-15

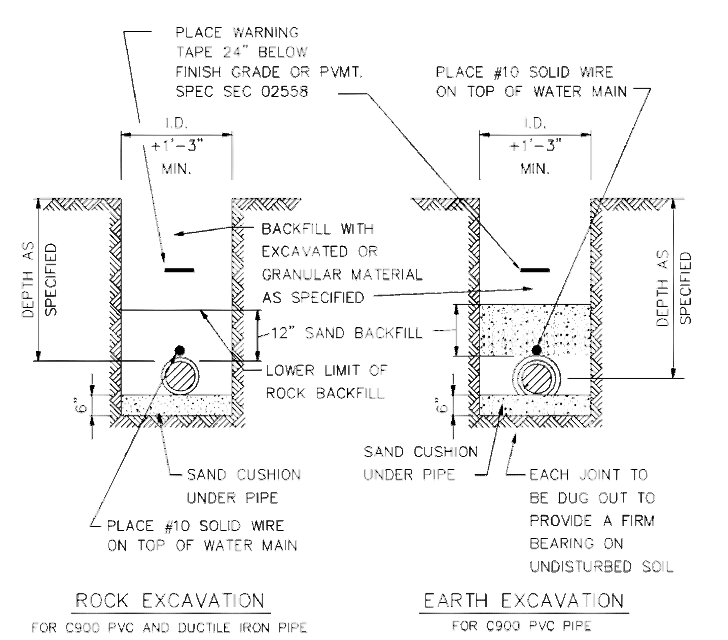

NOTE:
DUCTILE IRON PIPE OR HDPE (D11) PIPE DOES NOT REQUIRE SPECIAL BACKFILL UNLESS DIRECTED ON THE PLANS OR REQUIRED BY THE DIRECTOR OR THIER DESIGNEE.

WATER MAIN INSTALLATION DETAIL

TOWN OF WESTFIELD, INDIANA

RENEE LYNN GOFF REGISTERED NO. 10403860 STATE OF INDIANA PROFESSIONAL ENGINEER

Renée Lynn Goff 10/9/06 DATE FIGURE W-1

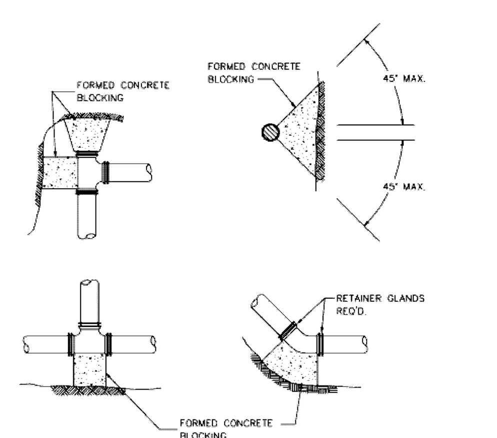

SIZE	TEE & PLUG	90° BEND	45° BEND	22-1/2° BEND	11-1/4° BEND
4"	2.0	2.5	1.5	1.0	1.0
6"	4.0	5.5	3.0	1.5	1.0
8"	6.5	9.0	5.0	2.5	1.5
10"	10.0	14.0	7.5	4.0	2.0
12"	14.0	20.0	11.0	5.5	3.0
14"	19.0	27.0	14.5	7.5	4.0
16"	25.0	35.0	19.0	10.0	5.0
18"	31.5	44.5	24.0	12.5	6.5
20"	40.0	54.0	31.0	16.5	7.5
24"	55.5	78.5	42.5	22.0	11.0
30"	86.5	122.0	66.0	34.0	17.0
36"	124.0	175.5	95.0	48.5	24.5
42"	168.0	237.5	128.5	65.5	33.0
48"	212.0	366.0	160.0	85.0	42.0

(AREA IN SQ. FT. REQUIRED FOR CONCRETE THRUST BLOCKING)

NOTE:

THE THRUST BLOCK AREAS ARE BASED ON A SOIL BEARING LOAD OF 2,000 LB./SQ. FT.

GREASE OR PLACE A LAYER OF VISQUEEN ON ALL WATER MAIN SURFACES PRIOR TO PLACEMENT OF CONCRETE

THRUST BLOCK DETAIL

TOWN OF WESTFIELD, INDIANA

RENEE LYNN GOFF REGISTERED NO. 10403860 STATE OF INDIANA PROFESSIONAL ENGINEER

Renée Lynn Goff 10/9/06 DATE FIGURE W-2

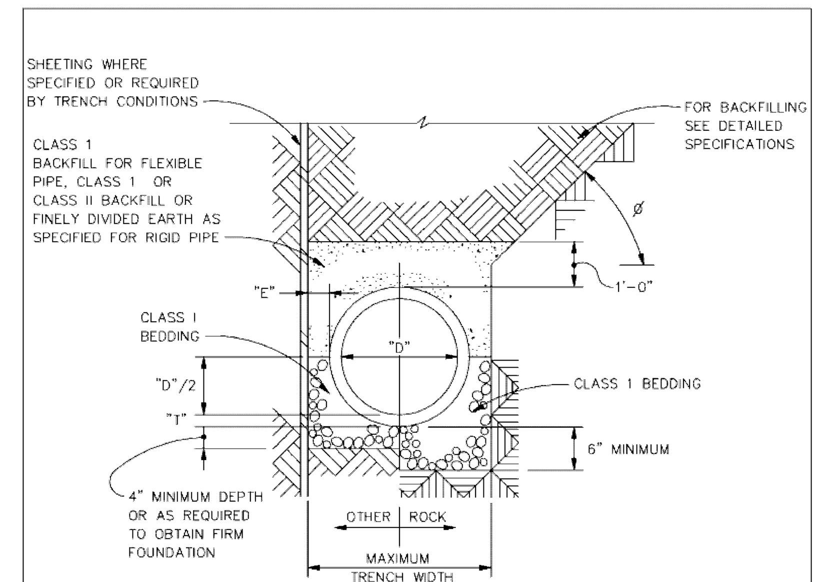

CLASS I BEDDING
TYPICAL SECTIONS IN FIRM FOUNDATIONS

NOTES:

1. SLOPE ANGLE, **' ,SHALL BE LESS THAN THE FRICTION ANGLE OF THE EXCAVATED MATERIAL.
2. "D"= NOMINAL PIPE SIZE.
3. "T"= PIPE WALL THICKNESS.

PVC BEDDING DETAIL

TOWN OF WESTFIELD, INDIANA

RENEE LYNN GOFF REGISTERED NO. 10403860 STATE OF INDIANA PROFESSIONAL ENGINEER

Renée Lynn Goff 10/9/06 DATE FIGURE W-14

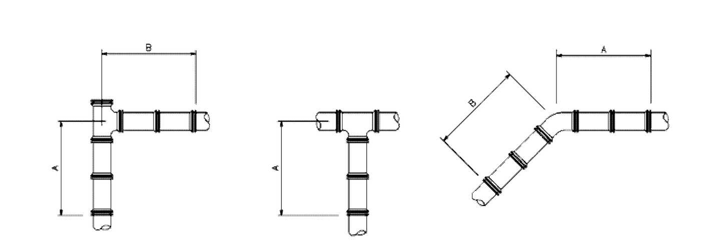

NOTE:

THE LENGTHS OF PIPE WITH RESTRAINED JOINTS ARE BASED ON A COMPACTED SILTY SOIL SURROUNDING THE PIPE

	A		B		
SIZE	TEE & PLUG	90° BEND	45° BEND	22-1/2° BEND	11-1/4° BEND
6"	12'-0"	17'-0"	10'-0"	6'-0"	3'-0"
8"	16'-0"	22'-0"	13'-0"	8'-0"	4'-0"
10"	19'-0"	27'-0"	16'-0"	9'-0"	5'-0"
12"	23'-0"	32'-0"	19'-0"	11'-0"	6'-0"
14"	26'-0"	36'-0"	21'-0"	12'-0"	7'-0"
16"	29'-0"	41'-0"	24'-0"	14'-0"	8'-0"
18"	32'-0"	45'-0"	26'-0"	15'-0"	8'-0"
20"	35'-0"	50'-0"	29'-0"	16'-0"	9'-0"
24"	41'-0"	58'-0"	34'-0"	19'-0"	10'-0"
30"	50'-0"	70'-0"	40'-0"	22'-0"	12'-0"
36"	58'-0"	82'-0"	46'-0"	26'-0"	14'-0"
42"	66'-0"	93'-0"	52'-0"	29'-0"	15'-0"

(LENGTH IN FEET REQUIRED FOR RESTRAINING JOINTS)

RESTRAINED JOINT DETAILS

TOWN OF WESTFIELD, INDIANA

RENEE LYNN GOFF REGISTERED NO. 10403860 STATE OF INDIANA PROFESSIONAL ENGINEER

Renée Lynn Goff 10/9/06 DATE FIGURE W-3

PRELIMINARY CONSTRUCTION PLANS

811
Know what's below. Call before you dig.

Within Indiana Call
811 or 800-382-5544
24 Hours a Day, 7 Days a Week.

PER INDIANA STATE LAW IC 8-1-26. IT IS AGAINST THE LAW TO EXCAVATE WITHOUT NOTIFYING THE UNDERGROUND LOCATION SERVICE TWO (2) WORKING DAYS BEFORE COMMENCING WORK.

10505 N. College Avenue
Indianapolis, Indiana 46280
weihe.net
317 | 846 - 6611
800 | 452 - 6408
317 | 843 - 0546 fax
ALLAN H. WEIHE, P.E., L.S. - FOUNDER

WEIHE ENGINEERS
Land Surveying | Civil Engineering
Landscape Architecture

PROJECT NO.: W12.0262
DWG NAME: 120262-C201 det.dwg
DESIGNED BY: EAC/MG
DRAWN BY: EAC/MG
CHECKED BY: JKS
DATE: 06.29.2012

REVISIONS AND ISSUES	DATE	BY

JAMES K. SHINNEMAN REGISTERED NO. 10200392 STATE OF INDIANA PROFESSIONAL ENGINEER
APPROVAL PENDING NOT FOR CONSTRUCTION

JAMES K. SHINNEMAN P.E. 10200392

PREPARED FOR:
EPIPHANY EVANGELICAL LUTHERAN CHURCH PHASE ONE
156TH AND DITCH ROAD, WESTFIELD IN

UTILITY PLAN DETAILS

Part of the SE Corner of SW/1/4 of Section 10, Township 18 North, Range 3 East, Washington Township, Hamilton County, Indiana

SHEET NO.
C205

PROJECT NO.
W12.0262

LOCATION: H:\2012\w120262\Engineering\design\conset\120262-C201 det.dwg
LAYOUT: C205 – UTILITY DETAILS
DATE/TIME: June 29, 2012 – 8:01am
PLOTTED BY: cartere

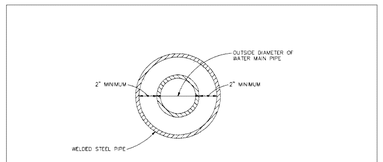

DIAMETER OF CASING	WALL THICKNESS (INCHES) UNDER HIGHWAY	UNDER RAILROAD
UNDER 14"	0.250	0.188
14"	0.250	0.219
16"	0.250	0.219
18"	0.250	0.250
20"	0.375	0.281
22"	0.375	0.312
24"	0.375	0.344
26"	0.375	0.375
28"	0.500	0.406
30"	0.500	0.406
32"	0.500	0.438
34"	0.500	0.469
36"	0.500	0.469
38"	0.500	0.500
40"	0.500	0.500
42"	0.500	0.500

STEEL CASING DETAIL

TOWN OF WESTFIELD, INDIANA

10/9/08
DATE

FIGURE W-4

OPTIONS : ☐ **DH152** (HARD WIRED LEVEL CONTROLS) ☐ **DR152** (WIRELESS LEVEL CONTROLS)

FIELD JOINT REQUIRED FOR MODELS DH152-129 / DR152-129 DH152-160 / DR152-160

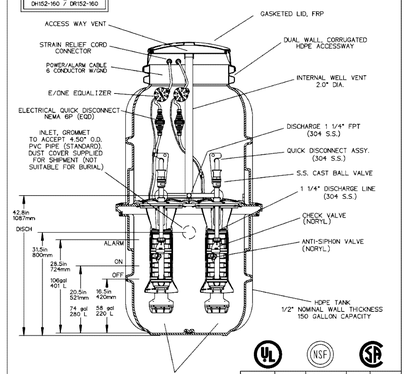

SEMI-POSITIVE DISPLACEMENT TYPE PUMP EACH DIRECTLY DRIVEN BY A 1 HP MOTOR

CONCRETE BALLAST MAY BE REQUIRED SEE INSTALLATION INSTRUCTIONS FOR DETAILS

AD	CH	04/27/09	B	
DR BY	CH'D	DATE	ISSUE	SCALE

eone SEWER SYSTEMS

MODEL DH152 / DR152 DETAIL SHEET

NA0052P02

OPTIONS : ☐ **DH152 -129** (HARD WIRED LEVEL CONTROLS) ☐ **DR152 -129** (WIRELESS LEVEL CONTROLS)

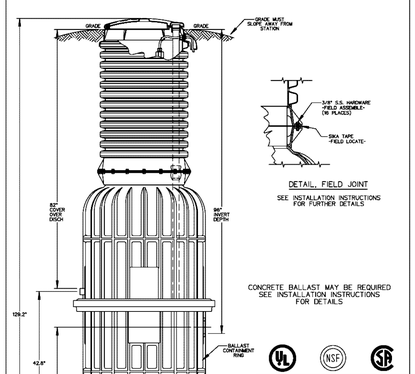

CONCRETE BALLAST MAY BE REQUIRED SEE INSTALLATION INSTRUCTIONS FOR DETAILS

AD	CAH	7/13/07	A	1/16
DR BY	CH'D	DATE	ISSUE	SCALE

eone SEWER SYSTEMS

MODEL DH152-129 / DR152-129

NA0052P05

STANDARD NOTE:

1. System shall be designed for the following capacities:
Peak Treatment Flow: 4.4 cfs [124 L/s]
Sediment Storage: 45 ft³ [1.3 m³]
Oil/Debris Storage: 270 gal. [1022 L]

* Please see accompanied Aqua-Swirl specification notes.
* See Site Plan for actual system orientation.
** Orientation may vary from 90°, 180°, or custom angles to meet site conditions.

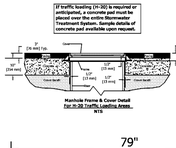

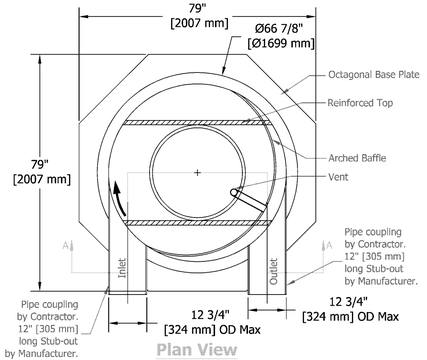

Plan View

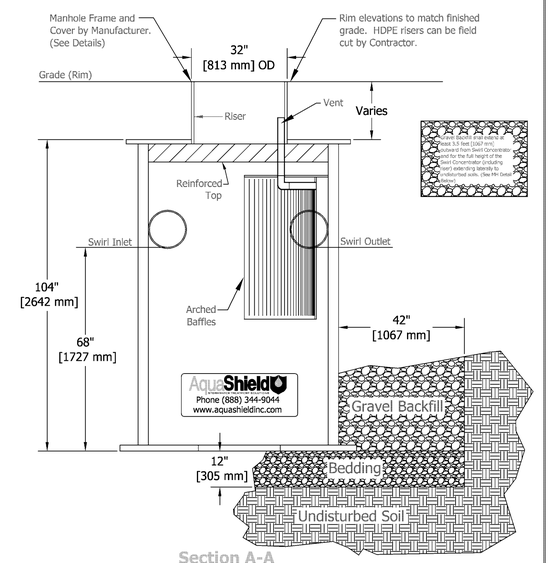

Section A-A

Document:	AS-5 STD
Drawn By:	BLR
Scale:	1:20
Date:	11/05/08

AquaShield
2705 Kanasita Drive, Chattanooga, TN 37343
Phone (888) 344-9044 Fax (423) 826-2112
www.aquashieldinc.com

U.S. Patent No. 6524473 and other Patent Pending

Aqua-Swirl Concentrator Model AS-5 Off-Line Horseshoe Standard Detail

PRELIMINARY CONSTRUCTION PLANS

WEIHE ENGINEERS
Land Surveying | Civil Engineering
Landscape Architecture
10505 N. College Avenue
Indianapolis, Indiana 46280
weihe.net
317 | 846 - 6611
800 | 452 - 6408
317 | 843 - 0546 fax
ALLAN H. WEIHE, P.E., L.S. - FOUNDER

PROJECT NO.: W12.0262
DWG NAME: 120262-C201 det.dwg
DESIGNED BY: EAC/MG
DRAWN BY: EAC/MG
CHECKED BY: JKS
DATE: 05/29/2012

REVISIONS AND ISSUES | BY | DATE

JAMES K. SHINNEMAN P.E. 10200392

PREPARED FOR:
EPIPHANY EVANGELICAL LUTHERAN CHURCH PHASE ONE
156TH AND DITCH ROAD, WESTFIELD IN

UTILITY PLAN DETAILS

Part of the SE Corner of SW1/4 of Section 13, Township 18 North, Range 3 East, Washington Township, Hamilton County, Indiana

SHEET NO.
C205

PROJECT NO.
W12.0262

Know what's **below.** **Call** before you dig.
Within Indiana Call 811 or 800-382-5544
24 Hours a Day, 7 Days a Week.
PER INDIANA STATE LAW IC 8-1-26, IT IS AGAINST THE LAW TO EXCAVATE WITHOUT NOTIFYING THE UNDERGROUND LOCATION SERVICE TWO (2) WORKING DAYS BEFORE COMMENCING WORK.

LOCATION: I:\2012\w12.0262\Engineering\design\cosserl\120262-C201 det.dwg
LAYOUT: C205 - UTILITY DETAILS
DATE/TIME: June 29, 2012 - 8:01am
PLOTTED BY: cserle

EARTHWORK SPECIFICATIONS:

1. SCOPE OF WORK

A) EXTENT: THE WORK REQUIRED UNDER THIS SECTION CONSISTS OF ALL EXCAVATING, FILLING, ROUGH GRADING AND RELATED ITEMS NECESSARY TO COMPLETE THE WORK INDICATED ON THE DRAWINGS AND DESCRIBED IN THE SPECIFICATIONS.

2. IN GENERAL THE ITEMS OF WORK TO BE PERFORMED UNDER THIS SECTION SHALL INCLUDE CLEARING AND GRUBBING, REMOVAL OF TREES AND STUMPS (WHERE REQUIRED), PROTECTION OF TREES TO REMAIN, STRIPPING AND STORAGE OF TOPSOIL, FILL, COMPACTION AND ROUGH GRADING OF ENTIRE SITE AS INDICATED ON THE DRAWINGS.

3. EXCAVATED MATERIAL THAT IS SUITABLE MAY BE USED FOR FILLS. ALL UNSUITABLE MATERIALS AND ALL SURPLUS EXCAVATED MATERIAL NOT REQUIRED SHALL BE REMOVED FROM THE SITE. THE LOCATION OF DUMP AND LENGTH OF HAUL SHALL BE THE CONTRACTOR'S RESPONSIBILITY.

4. PROVIDE AND PLACE ANY ADDITIONAL FILL MATERIAL FROM OFF THE SITE AS MAY BE NECESSARY TO PRODUCE THE GRADES REQUIRED. FILL OBTAINED FROM OFF SITE SHALL BE OF KIND AND QUALITY AS SPECIFIED TO FILLS HEREIN AND THE SOURCE APPROVED BY THE ENGINEER AND OWNER.

5. THE CONTRACTOR SHALL ACCEPT THE SITE AS HE FINDS IT AND SHALL REMOVE ALL TRASH, RUBBISH AND DEBRIS FROM THE SITE PRIOR TO STARTING EXCAVATION.

B) WORK INCLUDED: THE FOLLOWING ITEMS OF RELATED WORK ARE SPECIFIED AND INCLUDED IN OTHER SECTIONS OF THESE SPECIFICATIONS.

1. EXCAVATION, GRADING AND BACKFILLING FOR UTILITY LINES.
2. STORM DRAINAGE SYSTEMS.
3. SANITARY SEWER SYSTEMS.
4. WATER SUPPLY SYSTEMS.
5. DRIVES AND PAVING.

2. BENCHMARKS

A) MAINTAIN CAREFULLY ALL BENCHMARKS, MONUMENTS AND OTHER REFERENCE POINTS, IF DISTURBED OR DESTROYED REPLACE AS DIRECTED BY ENGINEER.

3. PROTECTION OF TREES

A) GENERAL PROTECTION: THE CONTRACTOR SHALL BE RESPONSIBLE FOR THE PROTECTION OF TOPS, TRUNKS AND ROOTS OF EXISTING TREES ON THE PROJECT SITE THAT ARE TO REMAIN. EXISTING TREES SUBJECT TO CONSTRUCTION DAMAGE SHALL BE BOXED, FENCED OR OTHERWISE PROTECTED BEFORE ANY WORK IS STARTED, DO NOT STOCKPILE WITHIN BRANCH SPREAD. REMOVE INTERFERING BRANCHES WITHOUT INJURY TO TRUNKS AND COVER SCARS WITH TREE PAINT.

4. REMOVAL OF TREES

A) REMOVE ALL TREES AND STUMPS FROM AREA TO BE OCCUPIED BY ROAD AND SURFACED AREAS. REMOVAL OF TREES OUTSIDE THESE AREAS SHALL ONLY BE DONE AS NOTED ON DRAWINGS OR APPROVED BY THE OWNER.

B) ALL BRUSH, STUMPS, WOOD AND OTHER REFUSE FROM THE TREES SHALL BE REMOVED FROM SITE OR BURNED WITH PROPER PERMITS (WHERE APPLICABLE).

5. STRIPPING OF TOPSOIL

A) REMOVE TOPSOIL TO A DEPTH OF 6 INCHES (OR MORE IF REQUIRED) FROM THE AREAS TO BE OCCUPIED BY ROADS, WALKS, BUILDINGS, AND PARKING AREAS. PILE AND STORE TOPSOIL AT A LOCATION WHERE IT WILL NOT INTERFERE WITH CONSTRUCTION OPERATIONS. TOPSOIL SHALL BE REASONABLY FREE FROM SUBSOIL, DEBRIS AND STONES.

6. SITE GRADING

A) GRADES: DO ALL CUTTING, FILLING, COMPACTING OF FILLS AND ROUGH GRADING REQUIRED TO BRING ENTIRE PROJECT AREA TO SUBGRADE AS SHOWN ON THE DRAWINGS. UNDERCUT OPEN AREAS 4 INCHES FOR TOPSOIL.

B) ROUGH GRADING: THE TOLERANCE FOR PAVED AREAS SHALL NOT EXCEED 0.10 FEET ABOVE ESTABLISHED SUBGRADE. ALL OTHER AREAS SHALL NOT EXCEED 0.10 FEET PLUS OR MINUS THE ESTABLISHED GRADE. PROVIDE ROUNDING AT TOP AND BOTTOM OF BANKS AND OTHER BREAKS IN GRADE. ALL OPEN AREAS SHALL BE GRADED A MINIMUM OF 0.5% AND A MAXIMUM OF 3:1 SLOPE.

C) SUBGRADE SHALL BE PROOFROLLED WITH SUITABLE EQUIPMENT AND ALL SPONGY AND OTHERWISE UNSUITABLE MATERIAL SHALL BE REMOVED AND REPLACED WITH SUITABLE MATERIAL.

D) SUBGRADE FOR STREETS AND PAVED AREAS SHALL BE COMPACTED TO 95% OF MODIFIED PROCTOR.

E) SEE PROJECT MANUAL AND SOILS REPORT FOR REQUIREMENTS REGARDING UNDERCUTTING AND SUBGRADE PREPARATION FOR PAVEMENT.

F) ALL FILL MATERIAL SHALL BE FORMED FROM SOIL FREE OF DELETERIOUS MATERIAL. PRIOR TO PLACEMENT OF FILL, A SAMPLE OF THE PROPOSED MATERIAL SHALL BE SUBMITTED TO THE SOILS ENGINEER FOR APPROVAL. THE FILL MATERIAL SHALL BE PLACED IN LAYERS NOT TO EXCEED 8" IN LOOSE THICKNESS AND SHALL BE SPREAD AND COMPACTED AT THE PROPER MOISTURE CONTENT.

G. ALL FILL MATERIAL IN AREAS OUTSIDE OF BUILDING AND PAVEMENT AREAS SHALL BE COMPACTED LIGHTLY WITH EACH LIFT AND PROTECTED FORM EROSION. AREAS OF BUILDING CONSTRUCTION SHALL HAVE SUITABLE FILL MATERIAL PLACED AND COMPACTED IN ACCORDANCE WITH THE SOILS ENGINEER'S REPORT (MINIMUM 95% MODIFIED PROCTOR).

7. DISPOSITION OF UTILITIES

A) RULES AND REGULATIONS GOVERNING THE RESPECTIVE UTILITIES SHALL BE OBSERVED IN EXECUTING ALL WORK UNDER THIS SECTION.

B) IT SHALL BE THE RESPONSIBILITY OF EACH CONTRACTOR TO VERIFY ALL EXISTING UTILITIES AND CONDITIONS PERTAINING TO HIS PHASE OF THE WORK. IT SHALL ALSO BE THE CONTRACTORS RESPONSIBILITY TO CONTACT THE OWNERS OF THE VARIOUS UTILITIES BEFORE WORK IS STARTED. THE CONTRACTOR SHALL NOTIFY IN WRITING THE OWNERS OR THE ENGINEERS OF ANY CHANGES, ERRORS OR OMISSIONS FOUND ON THESE PLANS OR IN THE FIELD BEFORE WORK IS STARTED OR RESUMES.

C) WHERE ACTIVE UTILITIES ARE ENCOUNTERED BUT NOT SHOWN ON THE DRAWINGS, THE ENGINEER SHALL BE ADVISED BEFORE WORK IS CONTINUED.

D) INACTIVE AND ABANDONED UTILITIES ENCOUNTERED IN EXCAVATING AND GRADING OPERATIONS SHALL BE REPORTED TO THE ENGINEER. THEY SHALL BE REMOVED, PLUGGED OR CAPPED AS DIRECTED BY THE ENGINEER.

8. SEEDING PREPARATION

A) SOLVE ANY SURFACE OR SUBSURFACE DRAINAGE PROBLEMS AND CONSTRUCT PERMANENT EROSION CONTROL STRUCTURES.

B) REMOVE ALL ROCKS, ROOTS OR OTHER MATERIALS THAT MAY INTERFERE WITH SEEDBED PREPARATION.

C) PERFORM THE MAJOR FILLING SHAPING AND SMOOTHING OF GULLIED OR SEVERELY ERODED AREAS.

SANITARY SEWER SPECIFICATIONS:

1. SCOPE OF WORK

THE WORK UNDER THIS SECTION INCLUDES SANITARY SEWER LATERAL, CLEANOUTS, AND RELATED ITEMS, INCLUDING EXCAVATION AND BACKFILLING NECESSARY TO COMPLETE THE WORK SHOWN ON THE DRAWINGS, STARTING FIVE FEET OUTSIDE THE BUILDING WALLS. THE ENDS OF SEWERS SHALL BE TIGHTLY PLUGGED OR CAPPED AT THE TERMINAL POINTS, ADJACENT TO BUILDINGS, PENDING THE CONNECTING OF ALL SUCH LINES TO THE BUILDING DRAIN AS SPECIFIED IN THE PLUMBING SPECIFICATIONS AND ARCHITECTURAL DRAWINGS.

2. MATERIALS

A. SANITARY SEWERS

1. ALL GRAVITY PLASTIC SEWERS PIPE AND FITTINGS SHALL CONFORM TO ASTM D3034, SDR-35, THE MINIMUM CELL CLASSIFICATION FOR PVC AND TRUSS PIPE SHALL BE 12454-B OR 12454-C.

2. ABS SEWER PIPE AND FITTINGS SHALL CONFORM TO ASTM D2680 OR LATEST REVISION. IF USING TRUSS PIPE, JOINTS SHALL BE GASKET TYPE.

3. JOINTS FOR PVC AND PVC TRUSS PIPE SHALL BE COMPRESSION TYPE FLEXIBLE GASKETED JOINTS.

3. APPLICATION

A. PERMITS AND CODES: THE INTENT OF THIS SECTION OF THE SPECIFICATIONS IS THAT THE CONTRACTORS BID ON THE WORK COVERED HEREIN SHALL BE BASED UPON THE DRAWINGS AND SPECIFICATIONS, BUT THAT THE WORK SHALL COMPLY WITH ALL APPLICABLE CODES AND REGULATIONS AS AMENDED BY ANY WAIVERS. CONTRACTOR SHALL FURNISH ALL BONDS NECESSARY TO GET PERMITS FOR CUTS AND CONNECTIONS TO EXISTING SEWERS.

B. LOCAL STANDARDS: THE TERM "LOCAL STANDARDS" AS USED HEREIN MEANS THE STANDARDS OF DESIGN AND CONSTRUCTION OF THE RESPECTIVE MUNICIPAL DEPARTMENT OR UTILITY COMPANY.

C. EXISTING IMPROVEMENTS: MAINTAIN IN OPERATING CONDITION ALL ACTIVE UTILITIES, SEWERS AND OTHER DRAINS ENCOUNTERED IN THE SEWER INSTALLATION. REPAIR TO THE SATISFACTION OF THE OWNER ANY DAMAGE EXISTING ACTIVE IMPROVEMENTS.

D. WORKMANSHIP: TO CONFORM TO ALL LOCAL, STATE AND NATIONAL CODES AND TO BE APPROVED BY ALL LOCAL AND STATE AGENCIES HAVING JURISDICTION.

E. TRENCHING: LAY ALL PIPE IN OPEN TRENCHES, EXCEPT WHEN THE LOCAL AUTHORITY GIVES WRITTEN PERMISSION FOR TUNNELING. OPEN THE TRENCH SUFFICIENTLY AHEAD OF PIPE LAYING TO REVEAL ANY OBSTRUCTIONS. THE WIDTH OF THE TRENCH SHALL BE THE INSIDE PIPE DIAMETER PLUS 24 INCHES OR 12 INCHES ABOVE THE PIPE. SHEET AND BRACE TRENCH AS NECESSARY TO PROTECT WORKERS AND ADJACENT STRUCTURES. ALL TRENCHING TO COMPLY WITH OCCUPATIONAL SAFETY AND HEALTH ADMINISTRATION (OSHA) STANDARDS. KEEP TRENCHES FREE FROM WATER WHILE CONSTRUCTION IS IN PROGRESS. UNDER NO CIRCUMSTANCES LAY PIPE OR APPURTENANCES IN STANDING WATER. CONDUCT THE DISCHARGE FROM TRENCH DEWATERING TO DRAINS OR NATURAL DRAINAGE CHANNELS.

F. SPECIAL SUPPORTS: WHENEVER, IN THE OPINION OF THE ENGINEER, THE SOIL AT OR BELOW THE PIPE GRADE IS UNSUITABLE FOR SUPPORTING SEWERS AND APPURTENANCES SPECIFIED IN THIS SECTION, SUCH SPECIAL SUPPORT, IN ADDITION TO THOSE SHOWN OR SPECIFIED, SHALL BE PROVIDED AS THE ENGINEER MAY DIRECT AND THE CONTRACT WILL BE ADJUSTED.

G. BACKFILLING: FOR A DEPTH OF AT LEAST 12 INCHES ABOVE THE TOP OF THE PIPE, BACKFILL WITH GRANULAR MATERIAL FREE FROM LARGE STONES, ROCK FRAGMENTS, ROOTS OR SOD. COMPACT THIS BACKFILL THOROUGHLY, TAKING CARE NOT TO DISTURB THE PIPE. FOR THE REMAINING TRENCH DEPTH, BACKFILL WITH EARTH OR GRANULAR MATERIAL CONTAINING STONES OR ROCKS NOT LARGER THAN 4 INCHES. BACKFILL UNDER WALKS, PARKING AREAS, DRIVEWAYS AND STREETS SHALL BE GRANULAR MATERIAL ONLY – THOROUGHLY COMPACTED BY APPROVED METHODS. TRENCHES PARALLEL TO AND WITHIN 5 FEET OF PAVED ROADWAYS SHALL BE CONSTRUCTED THE SAME.

H. MANHOLE INVERTS: CONSTRUCT MANHOLE FLOW CHANNELS OF CONCRETE SEWER PIPE OR BRICK SMOOTHLY FINISHED AND OF SEMI-CIRCULAR SECTION CONFORMING TO THE INSIDE DIAMETER OF THE CONNECTING SEWERS. MAKE CHANGES IN SIZE OR GRADE GRADUALLY AND CHANGES IN DIRECTION BY TRUE CURVES. PROVIDE SUCH CHANNELS FOR ALL CONNECTING SEWERS AT EACH MANHOLE.

I. INFILTRATION: FURNISH NECESSARY EQUIPMENT TO TEST SEWERS FOR INFILTRATION. INFILTRATION RATES SHALL NOT EXCEED THE LOCAL STANDARDS. INFILTRATION UNDER TEST SHALL NOT EXCEED 100 GALLONS PER INCH ON INSIDE DIAMETER OF SEWER PIPE PER MILE OF SEWER IN 24 HOURS AND INCLUSIVE OF ALL APPURTENANCES WITH IN THE SECTION BEING TESTED SUCH AS MANHOLES, HOUSE CONNECTIONS, ETC. ALL SANITARY SEWER LINES UPON COMPLETION WILL BE REQUIRED TO PASS A LOW PRESSURE AIR TEST, UNLESS OTHERWISE DIRECTED BY THE LOCAL SEWER UTILITY.

J. FLUSHING SEWERS: FLUSH ALL SANITARY SEWERS EXCEPT BUILDING SEWERS WITH WATER TO OBTAIN FREE FLOW THROUGH EACH LINE. REMOVE ALL SILT AND TRASH FROM APPURTENANCES JUST PRIOR TO ACCEPTANCE OF WORK.

K. PLASTIC SEWER PIPE INSTALLATION: PLASTIC SEWER PIPE SHALL BE INSTALLED IN ACCORDANCE WITH ASTM D2321 PER LATEST REVISION, AND NO PLASTIC PIPE SHALL EXCEED A DEFLECTION OF 5%. PERFORM MANDREL TESTS AS REQUIRED BY SEWER DEPARTMENT.

L. STORM WATER CONNECTIONS: NO ROOF DRAINS, FOOTING DRAINS AND OR SURFACE WATER DRAINS MAY BE CONNECTED TO THE SANITARY SEWER SYSTEMS, INCLUDING TEMPORARY CONNECTIONS DURING CONSTRUCTION.

M. WATERLINE CROSSING: WHERE WATER LINES AND SANITARY SEWERS CROSS AND WATER LINES CANNOT BE PLACED ABOVE THE SEWER WITH MINIMUM OF 18 INCHES VERTICAL CLEARANCE, THE SEWER MUST BE CONSTRUCTED OF WATER WORKS GRADE DUCTILE IRON PIPE WITH MECHANICAL JOINTS WITHIN 10 FEET OF THE WATER LINE.

N. UTILITIES: IT SHALL BE THE RESPONSIBILITY OF EACH CONTRACTOR TO VERIFY ALL EXISTING UTILITIES AND CONDITIONS PERTAINING TO HIS PHASE OF THE WORK. IT SHALL ALSO BE THE CONTRACTORS RESPONSIBILITY TO CONTACT THE OWNERS OF THE VARIOUS UTILITIES BEFORE WORK IS STARTED. THE CONTRACTOR SHALL NOTIFY IN WRITING THE OWNERS OR THE ENGINEER OF ANY CHANGES, ERRORS OR OMISSIONS FOUND ON THESE PLANS OR IN THE FIELD BEFORE WORK IS STARTED OR RESUMED.

EROSION CONTROL SPECIFICATIONS:

THIS PLAN IS DESIGNED AS AN ATTEMPT TO PREVENT ANY AND ALL SEDIMENT FROM LEAVING THE CONSTRUCTION SITE BY WAY OF EROSION. IF EROSION OF SEDIMENT FROM THE SITE IS TAKING PLACE, THE CONTRACTOR AND/OR OWNER SHALL TAKE PREVENTATIVE ACTION IMMEDIATELY. THE ENGINEER SHALL BE CONSULTED IN THE EVENT THIS HAPPENS.

TEMPORARY SEEDING IS TO BE APPLIED TO ANY GRADED AREA THAT WILL REMAIN UNALTERED FOR AN EXTENDED PERIOD OF TIME.

PERMANENT SEEDING IS TO BE APPLIED IMMEDIATELY TO AREAS THAT HAVE ACHIEVED FINAL AND FINISHED GRADE.

PRESERVE EXISTING VEGETATION ON THE SITE WHENEVER AND WHEREVER POSSIBLE TO PREVENT TOPSOIL EROSION.

ALL SEDIMENT CAPTURING MEASURES SHALL BE IMPLEMENTED PRIOR TO THE DISTURBANCE OF THE CONSTRUCTION AREA THEY ARE INTENDED TO SERVICE.
ALL EROSION CONTROL MEASURES PROPOSED ARE TO BE PROPERLY MAINTAINED TO CONTINUE THEIR EFFECTIVENESS.

IF GRADING OCCURS DURING THE MONTHS OF DECEMBER, JANUARY OR FEBRUARY DORMANT SEEDING PROCEDURES SHALL BE USED.

DURING DRY WEATHER, KEEP LAWNS WATERED WITH SPRINKLERS OR OTHER APPROVED METHODS. RESEED ANY AREAS NOT GERMINATING OR DAMAGED AT INTERVALS AS MAY BE REQUIRED ACCORDING TO SEASONAL CONDITION AND/OR CONSTRUCTION ACTIVITY. WATER GRASS AND EXECUTE NECESSARY WEEDING UNTIL FULL STAND OF GRASS HAS BEEN OBTAINED.

THE IMPLEMENTATION AND MAINTENANCE OF THE EROSION CONTROL IS THE SOLE RESPONSIBILITY OF THE CONTRACTOR AND/OR OWNER.

IT SHALL BE THE CONTRACTOR'S AND/OR OWNER'S RESPONSIBILITY TO MINIMIZE SEDIMENTATION (FROM ON-SITE CONSTRUCTION ACTIVITIES) FROM BEING DEPOSITED ONTO ADJACENT PROPERTIES AND RECEIVING STREAMS/DITCHES IN STRICT COMPLIANCE WITH "RULE 5" (327 IAC 15-5, CONSTRUCTION ACTIVITY STORMWATER RUNOFF CONTROL). IT SHALL ALSO BE THE CONTRACTOR'S AND/OR OWNER'S RESPONSIBILITY TO OBTAIN ANY APPROVALS REQUIRED FROM THE LOCAL AUTHORITY AND TO SUBMIT A COMPLETE NOTICE OF INTENT LETTER TO THE OFFICE OF WATER MANAGEMENT, INDIANA DEPARTMENT OF ENVIRONMENTAL MANAGEMENT PRIOR TO ANY CONSTRUCTION ACTIVITY..

FOR SEASONAL VARIATIONS – SEE SEASONAL SOIL PROTECTION CHART IN THESE PLANS.

STORM SEWER SPECIFICATIONS:

1. SCOPE OF WORK

THE WORK UNDER THIS SECTION INCLUDES ALL STORM SEWERS, STORM WATER INLETS, AND RELATED ITEMS, INCLUDING EXCAVATING AND BACKFILLING, NECESSARY TO COMPLETE THE WORK SHOWN ON THE DRAWINGS.

2. MATERIALS

A. STORM SEWERS:

1. REINFORCED CONCRETE SEWER PIPE SHALL CONFORM TO ASTM C-76 CLASS 3 LATEST REVISION WITH JOINTS CONFORMING TO ASTM C-443 LATEST REVISION.

2. STORM SEWERS HANCOR "HIQ" PIPE AND ADS OR APPROVED EQUAL: WITH THE FOLLOWING REQUIREMENTS:

A. 4 INCH THROUGH 10 INCH MEETING AASHTO M252 TYPE S. 12 INCH THROUGH 36 INCH MEETING AASHTO M294 TYPE S.

B. GASKETS MEETING ASTM D1056 GRADE 2A2.

C. FITTINGS MEETING ASSHTO M252 OR AASHTO M294, MEETING ASTM D3350 CELL CLASSIFICATION 324420C: OR ASTM D3350 TYPE III, CLASS C, CATEGORY 4, GRADE P33.

B. DRAINAGE STRUCTURES:

1. PRECAST REINFORCED CONCRETE DRAINAGE SECTIONS AND STEPS SHALL CONFORM TO ASTM C-478 LATEST REVISION AND LATEST REVISION OF INDOT PRECAST STRUCTURE DETAILS.

2. CASTINGS SHALL BE OF UNIFORM QUALITY, FREE FROM BLOW HOLES, POROSITY, HARD SPOTS, SHRINKAGE DISTORTION OR OTHER DEFECTS, THEY SHALL BE SMOOTH AND WELL CLEANED BY SHOT BLASTING OR BY SOME OTHER APPROVED METHOD. THEY SHALL BE COATED WITH ASPHALT PAINT WHICH SHALL RESULT IN A SMOOTH COATING. TOUGH AND TENACIOUS WHEN COLD, NOT TACKY OR BRITTLE. THEY SHALL BE GRAY IRON MEETING ASTM A-48 LATEST REVISION.

3. JOINTS – STRUCTURE SECTIONS SHALL BE JOINTED WITH RUBBER TYPE GASKETS, THE RUBBER TYPE GASKETS SHALL MEET ASTM C-443 LATEST REVISION.

C. SUBDRAINS:

1. PERFORATED PLASTIC PIPE SUBDRAINS SHALL CONFORM TO ASTM D3034, SDR 35, ASTM D2729, OR ASTM F405.

3. APPLICATION

A. PERMITS AND CODES: THE INTENT OF THIS SECTION OF THE SPECIFICATIONS IS THAT THE CONTRACTOR'S BID ON THE WORK COVERED HEREIN SHALL BE BASED UPON THE DRAWINGS AND SPECIFICATIONS BUT THAT THE WORK SHALL COMPLY WITH ALL, APPLICABLE CODES AN REGULATIONS AS AMENDED BY ANY WAIVERS. CONTRACTOR SHALL FURNISH ALL BONDS NECESSARY TO GET PERMITS FOR CUTS AND CONNECTIONS TO EXISTING SEWERS.

B. LOCAL STANDARDS: THE TERM "LOCAL STANDARDS" AS USED HEREIN MEANS THE STANDARDS OF DESIGN AND CONSTRUCTION OF THE RESPECTIVE MUNICIPAL DEPARTMENT AND/OR UTILITY COMPANY.

C. EXISTING IMPROVEMENTS: MAINTAIN IN OPERATING CONDITION ALL ACTIVE UTILITIES, SEWERS AND OTHER DRAINS ENCOUNTERED IN THE SEWER INSTALLATION. REPAIR TO THE SATISFACTION OF THE OWNER ANY DAMAGE TO EXISTING ACTIVE IMPROVEMENTS.

D. WORKMANSHIP: TO CONFORM TO ALL LOCAL, STATE AND NATIONAL CODES AND TO BE APPROVED BY ALL LOCAL AND STATE AGENCIES HAVING JURISDICTION.

E. TRENCHING: LAY ALL PIPE IN OPEN TRENCHES, EXCEPT WHEN THE LOCAL AUTHORITY GIVE WRITTEN PERMISSION FOR TUNNELING. OPEN THE TRENCH SUFFICIENTLY AHEAD OF PIPE LAYING TO REVEAL ANY OBSTRUCTIONS. THE WIDTH OF THE TRENCH SHALL BE THE INSIDE PIPE DIAMETER PLUS 24 INCHES FOR 12 INCHES ABOVE THE PIPE. SHEET AND BRACE TRENCH AS NECESSARY TO PROTECT WORKMEN AND ADJACENT STRUCTURES. ALL TRENCHING TO COMPLY WITH OCCUPATIONAL SAFETY AND HEALTH ADMINISTRATION STANDARDS. KEEP TRENCHES FREE FROM WATER WHILE CONSTRUCTION IS IN PROGRESS. UNDER NO CIRCUMSTANCES LAY PIPE OR APPURTENANCES IN STANDING WATER. CONDUCT THE DISCHARGE FORM TRENCH DEWATERING TO DRAINS OR NATURAL DRAINAGE CHANNELS.

F. SPECIAL SUPPORTS: WHENEVER, IN THE OPINION OF THE ENGINEER, THE SOIL AT OR BELOW THE PIPE GRADE IS UNSUITABLE FOR SUPPORTING SEWERS AND APPURTENANCES SPECIFIED IN THIS SECTION, SUCH SPECIAL SUPPORT, IN ADDITION THOSE SHOWN OR SPECIFIED, SHALL BE PROVIDED AS THE ENGINEER MAY DIRECT, AND THE CONTRACT WILL BE ADJUSTED.

G. BACKFILLING

1. RCP BACKFILLING: FOR DEPTH OF AT LEAST 12 INCHES ABOVE THE TOP OF THE PIPE, BACKFILL WITH EARTH OR GRANULAR MATERIAL FREE FROM LARGE STONES, ROCK FRAGMENTS, ROOTS OR SOD. TAMP THIS BACKFILL THOROUGHLY TAKING CARE NOT TO DISTURB THE PIPE. FOR THE REMAINING TRENCH DEPTH, BACKFILL WITH EARTH OR GRANULAR MATERIAL CONTAINING STONES OR ROCKS NOT LARGER THAN 4 INCHES. BACKFILL UNDER WALKS, PARKING AREAS, DRIVEWAYS AND STREETS SHALL BE GRANULAR MATERIAL ONLY THOROUGHLY COMPACTED BY APPROVED METHODS. TRENCHES PARALLEL TO AND WITHIN 5 FEET OF PAVED ROADWAYS SHALL ALSO BE CONSTRUCTED WITH COMPACTED GRANULAR MATERIALS.

2. HDPE BACKFILLING: FOR DEPTH OF AT LEAST 12 INCHES ABOVE THE TOP OF THE PIPE, BACKFILL WITH GRANULAR MATERIAL. COMPACT THIS BACKFILL THOROUGHLY TAKING CARE NOT TO DISTURB THE PIPE. FOR THE REMAINING TRENCH DEPTH, BACKFILL WITH EARTH OR GRANULAR MATERIAL CONTAINING STONES OR ROCKS NOT LARGER THAN 4 INCHES. BACKFILL UNDER WALKS, PARKING AREAS, DRIVEWAYS AND STREETS SHALL BE GRANULAR MATERIAL ONLY THOROUGHLY COMPACTED BY APPROVED METHODS. TRENCHES PARALLEL TO AND WITHIN 5 FEET OF PAVED ROADWAYS SHALL ALSO BE CONSTRUCTED WITH COMPACTED GRANULAR MATERIALS.

H. SUBDRAINS: ALL SUBDRAINS ON SITE SHALL BE OF THE SIZE AS SHOWN AND SHALL BE PLACED AS SHOWN ON THE PLANS. THEY SHALL BE CONSTRUCTED TO THE GRADES AS SHOWN ON THE PLANS.

I. UTILITIES: IT SHALL BE THE RESPONSIBILITY OF EACH CONTRACTOR TO VERIFY ALL EXISTING UTILITIES AND CONDITIONS PERTAINING TO HIS PHASE OF THE WORK. IT SHALL ALSO, BE THE CONTRACTORS RESPONSIBILITY TO CONTACT THE OWNERS OF THE VARIOUS UTILITIES BEFORE WORK IS STARTED. THE CONTRACTOR SHALL NOTIFY IN WRITING THE OWNERS OR THE ENGINEER OF ANY CHANGES, ERRORS OR OMISSIONS FOUND ON THESE PLANS OR IN THE FIELD BEFORE WORK IS STARTED OR RESUMED.

J. QUALITY CONTROL

1. CONTRACTOR SHALL CONTACT 'HDPE' BEFORE CONSTRUCTION BEGINS. MANUFACTURE'S REPRESENTATIVE SHALL BE ON SITE AT BEGINNING OF CONSTRUCTION FOR REQUIRED FIELD OBSERVATION.

2. MANUFACTURER'S REPRESENTATIVE SHALL VISIT SITE A MINIMUM OF 2 VISITS, ONCE AT START OF CONSTRUCTION AND ONCE DURING INSTALLATION OF PIPING.

PAVING SPECIFICATIONS:

1. SCOPE OF WORK

THE WORK REQUIRED UNDER THIS SECTION INCLUDES ALL EXTERIOR CONCRETE AND BITUMINOUS PAVING AND RELATED ITEMS NECESSARY TO COMPLETE THE WORK INDICATED ON DRAWINGS AND DESCRIBED IN THE SPECIFICATIONS, INCLUDING BUT NOT LIMITED TO: ALL DRIVES, PARKING AREAS IN CONTRACT LIMITS CURBS AND GUTTERS SIDEWALKS AND CONCRETE SLABS, EXTERIOR STEPS

2. MATERIALS

A. CONCRETE: CONCRETE SHALL BE READY-MADE AND SHALL BE A MIX OF PROPORTIONED FINE AND COARSE AGGREGATES WITH PORTLAND CEMENT AND WATER. MINIMUM CEMENT CONTENT SHALL BE 6 BAGS PER CUBIC YARD OF CONCRETE AND MAXIMUM WATER CONTENT SHALL BE 5.5 U.S. GALLONS PER SACK OF CEMENT, INCLUDING MOISTURE IN THE AGGREGATE. SLUMP FOR NORMAL WEIGHT CONCRETE SHALL BE A MAXIMUM OF 4 INCHES AND A MINIMUM OF 2 INCHES. THE SLUMP OF MACHINE PLACE CONCRETE SHALL BE NO LESS THAN 1-1/4 INCHES NOR MORE THAN 3 INCHES. STANDARD TEST ASTM C0143 SHALL BE USED TO MEASURE SLUMP. MINIMUM COMPRESSIVE STRENGTH OF CONCRETE AT 28 DAYS SHALL BE 4000 PSI. ALL EXTERIOR CONCRETE SHALL HAVE AIR ENTRAINMENT OF 5% TO 8% BY VOLUME PER ASTM C0260. RETEMPERING OF DELIVERED CONCRETE WILL NOT BE ALLOWED. CONCRETE SHALL BE COMPOSED OF:

1. PORTLAND CEMENT: CONFORMING TO ASTM C-150, TYPE IA OR TYPE IIIA.
2. AGGREGATES: CONFORMING TO ASTM C-33.
3. WATER: SHALL BE CLEAR AND FREE FROM INJURIOUS AMOUNTS OF OILS, ACIDS, ALKALIC ORGANIC MATERIALS OR OTHER DELETERIOUS SUBSTANCES.

B. WELDED STEEL WIRE FABRIC: WHERE REQUIRED FOR CONCRETE REINFORCEMENT SHALL CONFORM TO ASTM A185.

C. PRE MOLDED JOINT FILLER: SHALL BE NON-EXTRUDING TYPE MEETING ASTM D-544, EXCEPT THAT PRE MOLDED JOINT FILLER USED IN CONCRETE WALK CONSTRUCTION MAY BE EITHER NON-EXTRUDING OR RESILIENT.

D. BITUMINOUS PAVEMENT MATERIALS: ALL MATERIALS PROPOSED FOR THE CONSTRUCTION OF BITUMINOUS PAVEMENTS SHALL COMPLY WITH THE INDIANA DEPARTMENT OF TRANSPORTATION SPECIFICATIONS LATEST VERSION SHALL BE USED.

E. COMPACTED AGGREGATE SUB-BASE: SHALL BE CRUSHED STONE OR GRAVEL. CRUSHED GRAVEL SHALL BE A MINIMUM OF 35% CRUSHED MATERIAL. FINES SHALL BE LIMITED TO A MAXIMUM OF 8% OF THE TOTAL. MATERIAL SHALL BE FREE FROM AN EXCESS OF FLAT, CLONGATED, THINLY LAMINATED SOFT OR DISINTEGRATED PIECES, AND SHALL BE FREE FROM FRAGMENTS COATED WITH DIRT. COMPACTED AGGREGATE SHALL BE GRADED AS FOLLOW: PER LATEST REVISIONS.

SIEVE SIZE	% PASSING
1-1/2"	100
1"	80-100
3/4"	79-90
1/2"	55-80
#4	35-60
#8	25-50
#30	12-30
#200	5-10

3. APPLICATION

A. GRADING: DO ANY NECESSARY GRADING IN ADDITION TO THAT PERFORMED IN ACCORDANCE WITH EARTHWORK SECTION, TO BRING SUB GRADES, AFTER FINAL COMPACTION, TO THE REQUIRED GRADES AND SECTIONS FOR SITE IMPROVEMENT.

B. PREPARATION OF SUB-GRADE: REMOVE SPONGY AND OTHERWISE UNSUITABLE MATERIAL AND REPLACE WITH STABLE MATERIAL. NO TRAFFIC WILL BE ALLOWED ON PREPARED SUB-GRADE PRIOR TO PAVING.

C. COMPACTION OF SUB-GRADE: THE FIRST 6 INCHES BELOW THE SUB-GRADE SHALL BE COMPACTED TO AT LEAST 100% OF THE MAXIMUM DRY DENSITY AS DETERMINED BY THE PROVISIONS OF AASHTO T-99. WATER SHALL BE PREVENTED FOR STANDING ON THE COMPACTED SUB-GRADE

D. UTILITY STRUCTURES: CHECK FOR CORRECT ELEVATION OF ALL MANHOLE COVERS, INLETS, VALVE BOXES AND SIMILAR STRUCTURES LOCATED WITHIN AREAS TO BE PAVED AND MARK, OR HAVE MADE ANY NECESSARY ADJUSTMENTS IN SUCH STRUCTURES.

E. PLACING CONCRETE:

1. SUBGRADE: PLACE CONCRETE ONLY ON A MOIST, COMPACTED SUBGRADE OF BASE FREE FROM LOOSE MATERIAL. PLACE NO CONCRETE ON A MUDDY OR FROZEN SUBGRADE

2. FORMS: ALL FORMS SHALL BE FREE FROM WARP, TIGHT ENOUGH TO PREVENT LEAKAGE AND SUBSTANTIAL ENOUGH TO MAINTAIN THEIR SHAPE AND POSITION WITHOUT SPRINGING OR SETTING, WHEN CONCRETE IS PLACED. FORMS SHALL BE CLEAN AND SMOOTH IMMEDIATELY BEFORE PLACING CONCRETE.

3. PLACING CONCRETE: CONCRETE SHALL BE DEPOSITED SO AS TO REQUIRE AS LITTLE HANDING AS PRACTICABLE. WHEN CONCRETE IS TO BE PLACED AT AN ATMOSPHERIC TEMPERATURE OF 35 DEGREES F, OR LESS, PARAGRAPH 702.10 OF THE INDIANA DEPARTMENT OF TRANSPORTATION SPECIFICATIONS, LATEST REVISION SHALL BE FOLLOWED.

F. CONCRETE CURB:

1. EXPANSION JOINTS: SHALL BE 1/2 INCH THICK PRE MOLDED AT ENDS OF ALL RETURNS AND A MAXIMUM SPACING OF 100 FEET.

2. CONTRACTION JOINTS: UNLESS OTHERWISE PROVIDED, CONTRACTION JOINTS SHALL BE JOINTS SPACED 10 FEET ON CENTER.

3. FINISH: TAMP AND SCREED CONCRETE AS SOON AS PLACED, AND FILL ANY HONEYCOMBED PLACES, FINISH SQUARE CORNERS TO 1/4 INCH RADIUS AND OTHER CORNERS TO RADII SHOWN.

G. CONCRETE WALKS AND EXTERIOR STEPS:

1. SLOPES: PROVIDE ¼ INCH PER FOOT CROSS SLOPE. MAKE ADJUSTMENTS IN SLOPES A WALK INTERSECTIONS AS NECESSARY TO PROVIDE PROPER DRAINAGE.

2. DIMENSIONS: WALKS AND STEPS SHALL BE ONE COURSE CONSTRUCTION AND OF WIDTHS AND DETAILS SHOWN ON THE DRAWINGS.

3. FINISH: SCREED CONCRETE AND TROWEL WITH A STEEL TROWEL TO A HARD DENSE SURFACE AFTER SURFACE WATER HAS DISAPPEARED. APPLY MEDIUM BROOM FINISH AND SCRIBE CONTROL JOINTS AT 6 FEET SPACING. PROVIDE ½ INCH EXPANSION JOINTS WHERE SIDEWALKS INTERSECT, AND AT A MAXIMUM SPACING OF 48 FEET BETWEEN EXPANSION JOINTS.

H. CURING CONCRETE: EXCEPT AS OTHERWISE SPECIFIED, CURE ALL CONCRETE BY ONE OF THE METHODS DESCRIBED IN SECTION 501.17 OF THE INDIANA DEPARTMENT OF TRANSPORTATION SPECIFICATIONS, LATEST REVISION SHALL BE USED.

I. BITUMINOUS PAVEMENT: HOT ASPHALT CONCRETE PAVEMENT SHALL BE AS SPECIFIED IN SECTION 402 OF THE INDIANA DEPARTMENT OF TRANSPORTATION SPECIFICATIONS, LATEST REVISIONS SHALL BE USED. PAVING WILL NOT BE PERMITTED DURING UNFAVORABLE WEATHER OR WHEN THE TEMPERATURE IS 40 DEGREES F. AND FALLING.

J. COMPACTED AGGREGATE SUB-BASE: THE THICKNESS SHOWN ON THE DRAWINGS IS THE MINIMUM THICKNESS OF THE FULL COMPACTED SUB-BASE. COMPACTION SHALL BE ACCOMPLISHED BY ROLLING WITH A SMOOTH WHEELED ROLLER WEIGHING 8 TO 10 TONS. COMPACT TO 95% COMPACTION USING STANDARD TESTING PROCEDURES. ALONG CURBS, HEADERS AND WALLS AND AT ALL PLACES NOT ACCESSIBLE TO THE ROLLER, THE AGGREGATE MATERIAL SHALL BE TAMPED WITH MECHANICAL TAMPERS OR WITH APPROVED TAMPERS.

WATER LINES:

1. SCOPE OF WORK

A. THE WORK REQUIRED UNDER THIS SECTION INCLUDES ALL COLD WATER DISTRIBUTION LINES, VALVES, METER PITS, HYDRANTS, AND RELATED ITEMS INCLUDING EXCAVATING AND BACKFILLING NECESSARY TO COMPLETE THE WORK SHOWN ON THE DRAWINGS. THE END OF WATER SERVICE LINES SHALL BE TIGHTLY PLUGGED OR CAPPED AT THE TERMINAL POINTS PENDING THE CONNECTING TO ALL SUCH LINES OF THE BUILDING PIPING AS SPECIFIED IN THE PLUMBING SPECIFICATIONS AND ARCHITECTURAL DRAWINGS.

2. MATERIALS

A. DUCTILE IRON PIPE: DUCTILE IRON PIPE SHALL MEET AWWA C-150 AND C-151 SPECIFICATIONS. PIPE SHALL BE CEMENT LINED PER AWWA C-104.

B. COPPER TUBING: SHALL BE SEAMLESS, ANNEALED COPPER TUBING COMPLYING WITH FEDERAL SPECIFICATION WW-T799. FITTINGS SHALL BE WROUGHT COPPER OR CAST BRONZE WITH SOLDER JOINTS. SOLDER SHALL BE OF A COMPOSITION RECOMMENDED BY THE MANUFACTURER OF THE FITTINGS.

C. FIRE HYDRANTS: SHALL COMPLY WITH AWWA SPECIFICATION C-502 AND SHALL MEET LOCAL STANDARDS AND REQUIREMENTS, PARTICULARLY AS TO NOZZLE DIAMETERS AND THREADS, DIRECTION OF OPENING AND DIMENSIONS OF OPERATING AND CAP NUTS. FIRE HYDRANTS SHALL HAVE ONE PUMPER AND TWO HOSE NOZZLES. A VALVE OPENING NOT LESS THAN 5 INCHES AND A 6 INCH INLET CONNECTION. THE LENGTH OF THE HYDRANT BARREL SHALL BE DETERMINED BY THE SPECIFIED DEPTH OF COVER OVER THE PIPE.

D. VALVES: ALL VALVES AND STOPS SHALL HAVE ENDS SUITED OR ADAPTERS SHALL BE PROVIDED FOR THE PROPER INSTALLATION IN THE LINES IN WHICH THEY ARE LOCATED. VALVES SHALL MEET LOCAL STANDARDS OR IN THE ABSENCE OF SUCH STANDARDS, THE FOLLOWING REQUIREMENTS:

1. VALVES IN CAST IRON PIPE SHALL BE IRON BODY, BRONZE MOUNTED, DISC GATE VALVES CONFORMING TO AWWA SPECIFICATION C-500. THEY SHALL OPEN IN THE SAME DIRECTION AS THOSE USED IN THE LOCAL WATERWORKS SYSTEM. VALVE STEMS SHALL TERMINATE IN 2 INCH WRENCH NUTS. FURNISH TWO (2) KEYS.

2. VALVES IN COPPER PIPE SHALL BE STANDARD BRASS BODY, ROUND-WAY, GROUND-KEY STOPS, WITH T HEADS. FURNISH TWO (2) KEYS.

E. VALVE BOXES: SHALL MEET LOCAL STANDARDS OR IN THE ABSENCE OF SUCH, SHALL COMPLY WITH THE FOLLOWING REQUIREMENTS:

1. FOR IRON BODY VALVES, BOXES SHALL BE APPROVED STANDARD BUFFALO-TYPE CAST IRON, ADJUSTABLE SHAFT BOXES, HAVING A MINIMUM SHAFT DIAMETER OF 5-1/4 INCHES.

2. FOR BRASS BODY VALVES (STOPS) BOXES SHALL BE APPROVED STANDARD CAST IRON EXTENSION SERVICE BOXES, HAVING A MINIMUM DIAMETER OF 2-1/2 INCHES AND HAVING LID HELD IN PLACE BY A BRASS OR BRONZE BOLT. THE CASTINGS SHALL BE COATED WITH TWO COATS OF COAL-TAR PITCH VARNISH. FURNISH TWO (2) KEYS FOR BOLT IN LIDS.

3. APPLICATION:

A. PERMITS AND CODES: THE INTENT OF THIS SECTION OF THE SPECIFICATIONS IS THAT THE CONTRACTOR'S BID ON THE WORK COVERED HEREIN SHALL BE BASED UPON THE DRAWINGS AND SPECIFICATIONS BUT THAT THE WORK SHALL COMPLY WITH ALL APPLICABLE CODES AND REGULATIONS. CONTRACTOR SHALL FURNISH ALL NECESSARY BONDS TO GET PERMITS FOR CUTS AND CONNECTIONS.

B. EXISTING IMPROVEMENTS: MAINTAIN IN OPERATING CONDITION ALL ACTIVE UTILITIES AND SEWERS AND OTHER PIPE SYSTEM THAT MAY BE ENCOUNTERED.

C. TRENCHING: LAY ALL PIPE IN OPEN TRENCHES, EXCEPT WHEN LOCAL AUTHORITY GIVES WRITTEN PERMISSION FOR TUNNELING. PROVIDE SEPARATE TRENCH FOR THE WATER LINE AT LEAST 10 FEET HORIZONTALLY FROM ANY SANITARY SEWER. IN LOCATIONS WHERE SEPARATE TRENCHES FOR SEWER AND WATER LINES ARE IMPRACTICABLE, LAY THE WATER PIPE ON A SOLID SHELF AT LEAST 18 INCHES ABOVE THE TOP OF THE SEWER.

D. WIDTH OF TRENCH: EXCAVATE TRENCHES 12 INCHES EACH SIDE OF THE PIPE FOR PROPER INSTALLATION OF PIPE.

E. SHEETING AND BRACING: SHEET AND BRACE TRENCHES AS NECESSARY TO PROTECT WORKMEN AND ADJACENT STRUCTURES. ALL TRENCHING SHALL COMPLY WITH THE OCCUPATIONAL SAFETY AND HEALTH ADMINISTRATION STANDARDS.

F. WATER REMOVAL: KEEP TRENCHES FREE FROM WATER WHILE CONSTRUCTION THEREIN IS IN PROGRESS. UNDER NO CIRCUMSTANCES LAY PIPE OR APPURTENANCES IN STANDING WATER. CONDUCT THE DISCHARGE FROM TRENCH DEWATERING TO DRAINS, OR NATURAL DRAINAGE CHANNELS.

G. GRADING TRENCH BOTTOMS: THE BOTTOM QUADRANT OF THE PIPE SHALL BE FULLY AND UNIFORMLY SUPPORTED. THE FULL LOAD SHALL REST ON THE BARREL OF THE PIPE. THE TRENCH MAY BE EXCAVATED TO A DEPTH OF 4 INCHES OR MORE BELOW FINAL GRADE WITH SAND, CRUSHED STONE OR GRAVEL BACKFILL TO BRING IT BACK TO PIPE LAYING GRADE. FOR A DEPTH OF AT LEAST 12 INCHES ABOVE THE TOP OF THE PIPE BACKFILL WITH EARTH OR GRANULAR MATERIAL FREE FROM LARGE STONES, ROOTS OR FROZEN CLOGS. TAMP THIS BACKFILL THOROUGHLY TAKING CARE NOT TO DISTURB THE PIPE. BACKFILL UNDER WALKS, PARKING AREAS DRIVEWAYS AND STREETS WITH GRANULAR MATERIAL ONLY AND TAMP THOROUGHLY, BY APPROVED METHODS. TRENCHES PARALLEL TO AND WITHIN 10 FEET OF PAVED ROADWAYS SHALL ALSO BE CONSTRUCTED WITH COMPACTED GRANULAR MATERIAL.

H. TESTS: BEFORE JOINTS ARE COVERED, FILL THE PIPING WITH WATER, OPENING HYDRANTS OR OTHER OUTLETS TO EXPEL AIR. TEST THE PIPING FOR LEAKAGE AS REQUIRED BY THE LOCAL UTILITY. INSPECT ALL JOINTS FOR LEAKAGE AND REMEDY ANY LEAKS. UPON COMPLETION OF THE WATER LINES, FLUSH OUT THE SYSTEM UNTIL THE WATER RUNS CLEAR. AS SOON AS THE SYSTEM HAS BEEN FLUSHED OUT, IT SHALL BE STERILIZED IN ACCORDANCE WITH THE REQUIREMENTS OF THE LOCAL UTILITY.

I. IF A HORIZONTAL DISTANCE OF 10 FEET CANNOT BE MAINTAINED BETWEEN THE WATER LINE AND THE SANITARY SEWER LINE, THE SEWER MUST BE CONSTRUCTED OF WATER WORKS GRADE DUCTILE IRON PIPE WITH MECHANICAL JOINTS WITHIN 10' OF EITHER SIDE THE WATER LINE.

J. UTILITIES: IT SHALL BE THE RESPONSIBILITY OF EACH CONTRACTOR TO VERIFY ALL EXISTING UTILITIES AND CONDITIONS PERTAINING TO HIS PHASE OF THE WORK. IT SHALL ALSO BE THE CONTRACTOR'S RESPONSIBILITY TO CONTACT THE OWNERS OF THE VARIOUS UTILITIES BEFORE WORK IS STARTED. THE CONTRACTOR SHALL NOTIFY IN WRITING THE OWNERS OR THE ENGINEER OF ANY CHANGES, ERRORS OR OMISSIONS FOUND ON THESE PLANS OR IN THE FIELD BEFORE WORK IS STARTED OR RESUMED.

K. NEW WATER LINE CONSTRUCTION: CONTRACTOR TO RECORD DIMENSION OF EACH WATER STUB AND VALVES FROM NEAREST FIRE HYDRANT MEASURED ALONG WATER MAIN. THE LOCATIONS OF HYDRANTS AND WATER VALVES, ALONG WITH ANY OTHER CONSTRUCTION CHANGES ARE TO BE INCORPORATED ON THE ORIGINAL CONSTRUCTION DRAWINGS AND "RECORD DRAWING" PRINTS SHALL BE SUBMITTED TO THE LOCAL UTILITY AS SOON AFTER COMPLETION OF CONSTRUCTION AS POSSIBLE.

NOTE: THE ENGINEER AND/OR OWNER DISCLAIM ANY ROLE IN THE CONSTRUCTION MEANS AND METHODS ASSOCIATED WITH THE PROJECT AS SET FORTH IN THESE PLANS.

811

Know what's **below.**
Call before you dig.

Within Indiana Call
811 or 800-382-5544
24 Hours a Day, 7 Days a Week.

PER INDIANA STATE LAW IC 8-1-26. IT IS AGAINST THE LAW TO EXCAVATE WITHOUT NOTIFYING THE UNDERGROUND LOCATION SERVICE TWO (2) WORKING DAYS BEFORE COMMENCING WORK.

PRELIMINARY CONSTRUCTION PLANS

10505 N. College Avenue
Indianapolis, Indiana 46280
weihe.net

317 | 846 - 6611
800 | 452 - 6408
317 | 843 - 0546 *fax*

ALLAN H. WEIHE, P.E., L.S. - FOUNDER

WEIHE ENGINEERS
Land Surveying | Civil Engineering
Landscape Architecture

PROJECT NO.: W12.0262
DWG NAME: 120262-C301 spec.dwg
DESIGNED BY: EAC/MG
DRAWN BY: EAC/MG
CHECKED BY: JKS
DATE: 06.29.2012

REVISIONS AND ISSUES	DATE	BY

JAMES K. SHINNEMAN REGISTERED NO. 10200392 STATE OF INDIANA PROFESSIONAL ENGINEER
APPROVAL PENDING NOT FOR CONSTRUCTION

JAMES K. SHINNEMAN P.E. 10200392

PREPARED FOR:
EPIPHANY EVANGELICAL LUTHERAN CHURCH PHASE ONE
156TH AND DITCH ROAD, WESTFIELD IN
SPECIFICATIONS
Part of the SE Corner of SW/1/4 of Section 10, Township 18 North, Range 3 East, Washington Township, Hamilton County, Indiana

SHEET NO.
C301

PROJECT NO.
W12.0262

LOCATION: H:\2012\w120262\Engineering\design\conset\120262-C301 spec.dwg
LAYOUT: C301 - SPECS
DATE/TIME: June 29, 2012 - 7:59am
PLOTTED BY: cartere

SECTION 02538 - GRINDER PUMP STATIONS

PART 1 – GENERAL

1.01 SCOPE OF WORK

A. THE CONTRACTOR SHALL FURNISH AND INSTALL A COMPLETE FACTORY–BUILT AND TESTED GRINDER PUMPS STATIONS, EACH CONSISTING OF A GRINDER PUMP SUITABLY MOUNTED IN A BASIN CONSTRUCTED OF HIGH DENSITY POLYETHYLENE (HDPE), ELECTRICAL QUICK DISCONNECT, PUMP REMOVAL SYSTEM, SHUT–OFF VALVE, ANTI–SIPHON VALVE, AND CHECK VALVE ASSEMBLED WITHIN THE BASINS, ELECTRICAL ALARM/DISCONNECT PANEL, AND ALL NECESSARY INTERNAL WIRING AND CONTROLS. ALL EQUIPMENT SPECIFIED HEREIN AND, AND SHOWN ON THE DRAWINGS SHALL ALSO BE PROVIDED.

1.02 QUALITY ASSURANCE

MANUFACTURER QUALIFICATIONS:

1. THE EQUIPMENT SPECIFIED SHALL BE A PRODUCT OF A COMPANY EXPERIENCE IN THE DESIGN AND MANUFACTURE OF GRINDER PUMPS FOR SPECIFIC USE IN LOW PRESSURE SEWAGE SYSTEMS. THE COMPANY SHALL SUBMIT DETAILED INSTALLATION AND USER INSTRUCTIONS FOR THIS PRODUCT; SUBMIT EVIDENCE OF AN ESTABLISHED SERVICE PROGRAM INCLUDING COMPLETE PARTS AND SERVICE MANUALS, AND BE RESPONSIBLE FOR MAINTAINING A CONTINUING INVENTORY OF GRINDER PUMP REPLACEMENT PARTS.
2. THE MANUFACTURER SHALL PROVIDE A REFERENCE AND CONTACT LIST FROM THREE OF ITS LARGEST CONTIGUOUS GRINDER PUMP INSTALLATIONS.

1.03 SUBMITTALS

SUBMIT SHOP DRAWINGS FOR REVIEW BY THE ENGINEER SHOWING THE FOLLOWING:

1. COMPLETE DESCRIPTION IN SUFFICIENT DETAIL TO PERMIT AN ITEMIZED COMPARISON WITH THE SPECIFICATIONS.
2. DIMENSIONS AND INSTALLATION REQUIREMENTS.
3. DESCRIPTIVE INFORMATION INCLUDING MANUFACTURERS' CATALOG CUTS AND SPECIFICATIONS FOR ALL COMPONENTS.
4. ELECTRICAL SCHEMATICS AND LAYOUTS.
5. HYDRAULIC CALCULATIONS DEMONSTRATING COMPLIANCE WITH THE SPECIFIED HYDRAULIC CHARACTERISTICS.

PART 2 – PRODUCTS

2.01 MANUFACTURER

GRINDER PUMP STATION SHALL BE MODEL DH152–93 (DUPLEX SYSTEM) AS MANUFACTURED BY ENVIRONMENT ONE CORPORATION, NISKAYUNA, NEW YORK.

2.02 GENERAL REQUIREMENTS

A. PUMP THE PUMP SHALL BE CAPABLE OF DELIVERING 15 GPM AGAINST A RATED TOTAL DYNAMIC HEAD OF 0 FEET, 11 GMP AGAINST A RATED TOTAL DYNAMIC HEAD OF 92 FEET AND 7.8 GPM AGAINST A RATED TOTAL DYNAMIC HEAD OF 185 FEET. THE PUMP MUST ALSO BE CAPABLE OF OPERATING AT NEGATIVE TOTAL DYNAMIC HEAD WITHOUT OVERLOADING THE MOTOR. UNDER NO CONDITIONS SHALL IN–LINE PIPING OF VALVING BE ALLOWED TO CREATE A FALSE APPARENT HEAD. THE MATERIAL SHALL BE SUITABLE FOR DOMESTIC WASTEWATER SERVICE. ITS PHYSICAL PROPERTIES SHALL INCLUDE HIGH TEAR AND ABRASION RESISTANCE, GREASE RESISTANCE, WATER AND DETERGENT RESISTANCE, TEMPERATURE STABILITY, EXCELLENT AGING PROPERTIES, AND OUTSTANDING WEAR RESISTANCE.

B. GRINDER: THE GRINDER SHALL BE PLACED IMMEDIATELY BELOW THE PUMPING ELEMENTS AND SHALL BE DIRECT–DRIVEN BY A SINGLE, ONE–PIECE MOTOR SHAFT. THE GRINDER WILL BE OF THE ROTATING TYPE WITH A STATIONAR HARDENED AND GROUND STAINLESS STEEL SHREDDING RING SPACED IN CLOSE ANNULAR ALIGNMENT WITH THE DRIVEN IMPELLER ASSEMBLY, WHICH SHALL CARRY TWO HARDENED TYPE 400 SERIES STAINLESS STEEL CUTTER BARS.

THIS ASSEMBLY SHALL BE DYNAMICALLY BALANCED AND OPERATE WITHOUT OBJECTIONABLE NOISE OR VIBRATION OVER THE ENTIRE RANGE OF RECOMMENDED OPERATING PRESSURES. THE GRINDER SHALL BE CONSTRUCTED SO AS TO ELIMINATE CLOGGING AND JAMMING UNDER ALL NORMAL OPERATING CONDITIONS INCLUDING STARTING. SUFFICIENT VORTEX ACTION SHALL BE CREATED TO SCOUR THE TANK FREE OF DEPOSITS OR SLUDGE BANKS WHICH WOULD IMPAIR THE OPERATION OF THE PUMP.

THE GRINDER SHALL BE CAPABLE OF REDUCING ALL COMPONENTS IN NORMAL DOMESTIC SEWAGE, INCLUDING A REASONABLE AMOUNT OF "FOREIGN OBJECTS," SUCH AS PAPER, WOOD, PLASTIC, GLASS, RUBBER AND THE LIKE, TO FINELY–DIVIDED PARTICLES WHICH WILL PASS FREELY THROUGH THE PASSAGES OF THE PUMP AND THE 1–1/4" DIAMETER STAINLESS STEEL DISCHARGE PIPING.

C. ELECTRIC MOTOR: AS A MAXIMUM, THE MOTOR SHALL BE A 1 HP, 1725 RPM, 240 VOLT 60 HERTZ, 1 PHASE, CAPACITOR START, BALL BEARING, AIR–COOLED INDUCTION TYPE WITH A LOW STARTING CURRENT NOT TO EXCEED 30 AMPERES AND HIGH STARTING TORQUE OF 8.4 FOOT POUNDS. INHERENT PROTECTION AGAINST RUNNING OVERLOADS OR LOCKED ROTOR CONDITIONS FOR THE PUMP MOTOR SHALL BE PROVIDED BY THE USE OF AN AUTOMATIC–RESET, INTEGRAL THERMAL OVERLOAD PROTECTOR INCORPORATED INTO THE MOTOR. THIS MOTOR PROTECTOR COMBINATION SHALL HAVE BEEN SPECIFICALLY INVESTIGATED AND LISTED BY UNDERWRITERS LABORATORIES, INC., FOR THE APPLICATION.

D. MECHANICAL SEAL: THE PUMP/CORE SHALL BE PROVIDED WITH A MECHANICAL SHAFT SEAL TO PREVENT LEAKAGE BETWEEN THE MOTOR AND PUMP. THE SEAL SHALL HAVE A STATIONARY CERAMIC SEAT AND CARBON ROTATING SURFACE WITH FACES PRECISION LAPPED AND HELD IN POSITION BY A STAINLESS STEEL SPRING.

E. TANK AND INTEGRAL ACCESSWAY: THE TANK SHALL BE MADE OF FIBERGLASS OR HIGH DENSITY POLYETHYLENE, WITH A MELT INDEX OF 2.0 GRAMS/10 MINUTES OR LOWER TO ASSURE HIGH ENVIRONMENTAL STRESS CRACKING RESISTANCE.
CORRUGATED SECTIONS ARE TO BE MADE OF A DOUBLE WALL CONSTRUCTION WITH THE INTERNAL WALL BEING GENERALLY SMOOTH TO PROMOTE SCOURING. CORRUGATIONS OF THE OUTSIDE WALL ARE TO BE OF A MINIMUM AMPLITUDE OF 1 1/2" TO PROVIDE NECESSARY TRANSVERSE STIFFNESS. ANY INCIDENTAL SECTIONS OF A SINGLE WALL CONSTRUCTION ARE TO BE A MINIMUM .250 INCH THICK. ALL SEAMS CREATED DURING TANK CONSTRUCTION ARE TO BE THERMALLY WELDED AND FACTORY TESTED FOR LEAK TIGHTNESS. TANK WALL AND BOTTOM MUST WITHSTAND THE PRESSURE EXERTED BY SATURATED SOIL LOADING AT MAXIMUM BURIAL DEPTH. ALL STATION COMPONENTS MUST FUNCTION NORMALLY WHEN EXPOSED TO 150 PERCENT OF THE MAXIMUM EXTERNAL SOIL AND HYDROSTATIC PRESSURE.

THE GRINDER PUMP STATION TANK SHALL HAVE AN OPTIMUM CAPACITY OF 3000 GALLONS.

THE ACCESSWAY SHALL BE AN INTEGRAL EXTENSION OF THE WET WELL ASSEMBLY AND INCLUDE A LOCKABLE COVER ASSEMBLY MOUNTING AND WATERTIGHT CAPABILITY. ACCESSWAY DESIGN AND CONSTRUCTION SHALL ENABLE FIELD ADJUSTMENT OF STATION HEIGHT IN INCREMENTS OF 4" OR LESS WITHOUT THE USE OF ANY ADHESIVES OR SEALANTS REQUIRING CURE TIME BEFORE INSTALLATION CAN BE COMPLETED.

THE STATION SHALL HAVE ALL NECESSARY PENETRATIONS MOLDED IN AND FACTORY SEALED. TO ENSURE A LEAK FREE INSTALLATION NO FIELD PENETRATIONS SHALL BE ACCEPTABLE.

ALL DISCHARGE PIPING SHALL BE CONSTRUCTED OF 304 SERIES STAINLESS STEEL AND TERMINATE OUTSIDE THE ACCESSWAY BULKHEAD WITH A STAINLESS STEEL, 1 1/4 INCH FEMALE NPT FITTING. THE DISCHARGE PIPING SHALL INCLUDE A STAINLESS STEEL BALL VALVE RATED FOR 200 PSI WOG; PVC BALL VALVES WILL NOT BE ACCEPTED. THE BULKHEAD PENETRATION SHALL BE FACTORY INSTALLED AND WARRANTED BY THE MANUFACTURER TO BE WATERTIGHT.

THE ACCESSWAY SHALL INCLUDE A SINGLE NEMA 6P ELECTRICAL QUICK DISCONNECT (EQD) FOR ALL POWER AND CONTROL FUNCTIONS, FACTORY INSTALLED WITH ACCESSWAY PENETRATIONS WARRANTED BY THE MANUFACTURER TO BE WATERTIGHT. PLUG–TYPE CONNECTIONS OF THE POWER CABLE ONTO THE PUMP HOUSING WILL NOT BE ACCEPTABLE DUE TO THE POTENTIAL FOR LEAKS AND ELECTRICAL SHORTS. THE ACCESSWAY SHALL ALSO INCLUDE A 2 INCH PVC VENT TO PREVENT SEWAGE GASES FROM ACCUMULATING IN THE TANK.

F. CHECK VALVE: THE PUMP DISCHARGE SHALL BE EQUIPPED WITH A FACTORY INSTALLED, GRAVITY OPERATED, FLAPPER–TYPE INTEGRAL CHECK VALVE BUILT INTO THE STAINLESS STEEL DISCHARGE PIPING. THE CHECK VALVE WILL PROVIDE A FULL–PORTED PASSAGEWAY WHEN OPEN, AND SHALL INTRODUCE A FRICTION LOSS OF LESS THAN 6 INCHES OF WATER AT MAXIMUM RATED FLOW. MOVING PARTS WILL BE MADE OF A 300 SERIES STAINLESS STEEL AND FABRIC REINFORCED SYNTHETIC ELASTOMER TO ENSURE CORROSION RESISTANCE, DIMENSIONAL STABILITY, AND FATIGUE STRENGTH. A NONMETALLIC HINGE SHALL BE AN INTEGRAL PART OF THE FLAPPER ASSEMBLY PROVIDING A MAXIMUM DEGREE OF FREEDOM TO ASSURE SEATING EVEN AT A VERY LOW BACK–PRESSURE. THE VALVE BODY SHALL BE AN INJECTION MOLDED PART MADE OF GLASS FILLED PVC. BALL TYPE CHECK VALVES ARE UNACCEPTABLE DUE TO THEIR LIMITED SEALING CAPACITY IN SLURRY APPLICATIONS.

G. EACH GRINDER PUMP INSTALLATION SHALL ALSO INCLUDE ONE SEPARATE CHECK VALVE OF THE TYPE MANUFACTURED BY ENVIROMENT ONE CORPORATION FOR INSTALLATION IN THE 1 1/4" SERVICE LATERAL BETWEEN THE GRINDER PUMP STATION AND THE SEWER MAIN, PREFERABLY NEXT TO THE CURB STOP.

H. ANTI–SIPHON VALVE: THE PUMP DISCHARGE SHALL BE EQUIPPED WITH A FACTORY–INSTALLED, GRAVITY–OPERATED, FLAPPER–TYPE INTEGRAL ANTI–SIPHON VALVE BUILT INTO THE STAINLESS STEEL DISCHARGE PIPING. MOVING PARTS WILL BE MADE OF 300 SERIES STAINLESS STEEL AND FABRIC–REINFORCED SYNTHETIC ELASTOMER TO ENSURE CORROSION RESISTANCE, DIMENSIONAL STABILITY, AND FATIGUE STRENGTH. A NONMETALLIC HINGE SHALL BE AN INTEGRAL PART OF THE FLAPPER ASSEMBLY, PROVIDING A MAXIMUM DEGREE OF FREEDOM TO ENSURE PROPER OPERATION EVEN AT A VERY LOW PRESSURE. THE VALVE BODY SHALL BE INJECTION–MOLDED FROM A GLASS–FILLED THERMOPLASTIC RESIN. HOLES OR PORTS IN THE DISCHARGE PIPING ARE NOT ACCEPTABLE ANTI–SIPHON DEVICES, DUE TO THEIR TENDENCY TO CLOG FROM THE SOLIDS IN THE SLURRY BEING PUMPED.

I. CONTROLS: ALL NECESSARY CONTROLS, INCLUDING MOTOR AND LEVEL CONTROLS, SHALL BE LOCATED IN THE TOP HOUSING OF THE CORE UNIT. THE TOP HOUSING WILL BE ATTACHED WITH STAINLESS STEEL FASTENERS.

NON–FOULING WASTEWATER LEVEL CONTROLS FOR CONTROLLING PUMP OPERATION SHALL BE ACCOMPLISHED BY MONITORING THE PRESSURE CHANGES IN AN INTEGRAL AIR COLUMN CONNECTED TO A PRESSURE SWITCH. THE LEVEL DETECTION DEVICE SHALL HAVE NO MOVING PARTS IN DIRECT CONTACT WITH THE WASTEWATER. HIGH–LEVEL SENSING WILL BE ACCOMPLISHED IN THE MANNER DETAILED ABOVE BY A SEPARATE AIR–BELL SENSOR AND PRESSURE SWITCH OF THE SAME TYPE. CLOSURE OF THE HIGH–LEVEL SENSING DEVICE WILL ENERGIZE AN ALARM CIRCUIT AS WELL AS A REDUNDANT PUMP–ON CIRCUIT. FOR INCREASED RELIABILITY, PUMP ON/OFF AND HIGH–LEVEL ALARM FUNCTIONS SHALL NOT BE CONTROLLED BY THE SAME SWITCH. FLOAT SWITCHES OF ANY KIND, INCLUDING FLOAT TREES, WILL NOT BE ACCEPTED DUE TO THE PERIODIC NEED TO MAINTAIN (RINSING, CLEANING) SUCH DEVICES.

TO ASSURE RELIABLE OPERATION OF THE PRESSURE SWITCHES, EACH CORE SHALL BE EQUIPPED WITH A BREATHER ASSEMBLY, COMPLETE WITH A SUITABLE MEANS TO PREVENT ACCIDENTAL ENTRY OF WATER INTO THE MOTOR COMPARTMENT.

J. ALARM PANEL: EACH GRINDER PUMP STATION SHALL INCLUDE A NEMA 4X, UL LISTED ALARM PANEL SUITABLE FOR WALL MOUNTING. THE NEMA 4X ENCLOSURE SHALL BE MANUFACTURED OF THERMOPLASTIC TO ASSURE CORROSION RESISTANCE. THE ENCLOSURE SHALL INCLUDE A HINGED, LOCKABLE COVER, PADLOCK, AND SECURED DEAD FRONT.

THE ALARM PANEL SHALL INCLUDE THE FOLLOWING FEATURES: AUDIO & VISUAL ALARM, PUSH–TO–RUN SWITCH, AND HIGH LEVEL (REDUNDANT) PUMP STARTING CONTROL. THE ALARM SEQUENCE IS TO BE AS FOLLOWS:

1. WHEN LIQUID LEVEL IN THE SEWAGE WET–WELL RISES ABOVE THE ALARM LEVEL, VISUAL AND AUDIO ALARMS WILL BE ACTIVATED. THE CONTACTS ON THE ALARM PRESSURE SWITCH WILL CLOSE. THE REDUNDANT PUMP STARTING SYSTEM WILL BE ENERGIZED.
2. THE AUDIO ALARM MAY BE SILENCED BY MEANS OF THE EXTERNALLY MOUNTED, PUSH–TO–SILENCE BUTTON.
3. VISUAL ALARM REMAINS ILLUMINATED UNTIL THE SEWAGE LEVEL IN THE WET–WELL DROPS BELOW THE "OFF" SETTING OF THE ALARM PRESSURE SWITCH.
4. THE ENTIRE ALARM PANEL AS MANUFACTURED, SHALL BE LISTED BY UNDERWRITERS LABORATORIES, INC.

K. SERVICEABILITY: THE GRINDER PUMP CORE UNIT SHALL HAVE TWO LIFTING HOOKS COMPLETE WITH NYLON LIFT–OUT HARNESS CONNECTED TO ITS TOP HOUSING TO FACILITATE EASY CORE REMOVAL WHEN NECESSARY. ALL MECHANICAL AND ELECTRICAL CONNECTIONS MUST PROVIDE EASY DISCONNECT CAPABILITY FOR CORE UNIT REMOVAL AND INSTALLATION. A PUSH–TO–RUN FEATURE WILL BE PROVIDED FOR FIELD TROUBLE SHOOTING. ALL MOTOR CONTROL COMPONENTS SHALL BE MOUNTED ON A READILY REPLACEABLE BRACKET FOR EASE OF FIELD SERVICE.

L. OSHA CONFINED SPACE: ALL MAINTENANCE TASKS FOR THE GRINDER PUMP STATION MUST BE POSSIBLE WITHOUT ENTRY INTO THE GRINDER PUMP STATION (AS PER OSHA 1910.146, PERMIT–REQUIRED CONFINED SPACES). "ENTRY MEANS THE ACTION BY WHICH A PERSON PASSES THROUGH AN OPENING INTO A PERMIT–REQUIRED CONFINED SPACE. ENTRY INCLUDES ENSUING WORK ACTIVITIES IN THAT SPACE AND IS CONSIDERED TO HAVE OCCURRED AS SOON AS ANY PART OF THE ENTRANT'S BODY BREAKS THE PLANE OF AN OPENING INTO THE SPACE."

M. SAFETY: THE GRINDER PUMP SHALL BE FREE FROM ELECTRICAL AND FIRE HAZARDS AS REQUIRED IN A RESIDENTIAL ENVIRONMENT. AS EVIDENCE OF COMPLIANCE WITH THIS REQUIREMENT, THE COMPLETELY ASSEMBLED AND WIRED GRINDER PUMP STATION SHALL BE LISTED BY UNDERWRITERS LABORATORIES, INC., TO BE SAFE AND APPROPRIATE FOR THE INTENDED USE. UL LISTING OF COMPONENTS OF THE STATION, OR THIRD–PARTY TESTING TO UL STANDARD WILL NOT BE ACCEPTABLE.

THE GRINDER PUMP SHALL MEET ACCEPTED STANDARDS FOR PLUMBING EQUIPMENT FOR USE IN OR NEAR RESIDENCES, SHALL BE FREE FROM NOISE, ODOR, OR HEALTH HAZARDS, AND SHALL HAVE BEEN TESTED BY AN INDEPENDENT LABORATORY TO CERTIFY ITS CAPABILITY TO PERFORM AS SPECIFIED IN EITHER INDIVIDUAL OR LOW PRESSURE SEWER SYSTEM APPLICATIONS. AS EVIDENCE OF COMPLIANCE WITH THIS REQUIREMENT, THE GRINDER PUMP SHALL BEAR THE SEAL OF NSF INTERNATIONAL. THIRD–PARTY TESTING TO NSF STANDARD WILL NOT BE ACCEPTABLE.

PART 3 – EXECUTION

3.01 FACTORY TEST

A. EACH GRINDER PUMP SHALL BE SUBMERGED AND OPERATED FOR 5 MINUTES (MINIMUM). INCLUDED IN THIS PROCEDURE WILL BE THE TESTING OF ALL ANCILLARY COMPONENTS SUCH AS, THE ANTI–SIPHON VALVE, CHECK VALVE, DISCHARGE ASSEMBLY AND EACH UNIT'S DEDICATED LEVEL CONTROLS AND MOTOR CONTROLS. ALL FACTORY TESTS SHALL INCORPORATE EACH OF THE ABOVE LISTED ITEMS. ACTUAL APPURTENANCES AND CONTROLS WHICH WILL BE INSTALLED IN THE FIELD, SHALL BE PARTICULAR TO THE TESTED PUMP ONLY. A COMMON SET OF APPURTENANCES AND CONTROLS FOR ALL PUMPS WILL NOT BE ACCEPTABLE. CERTIFIED TEST RESULTS SHALL BE AVAILABLE UPON REQUEST SHOWING THE OPERATION OF EACH GRINDER PUMP AT TWO (2) DIFFERENT POINTS ON ITS CURVE, WITH THE MAXIMUM PRESSURE NO LESS THAN 60 PSI. THE ENGINEER RESERVES THE RIGHT TO INSPECT SUCH TESTING PROCEDURES WITH REPRESENTATIVES OF THE OWNER, AT THE GRINDER PUMP MANUFACTURER'S FACILITY.

B. ALL COMPLETED STATIONS SHALL BE FACTORY LEAK TESTED TO ASSURE THE INTEGRITY OF ALL JOINTS, SEAMS AND PENETRATIONS. ALL NECESSARY PENETRATIONS SUCH AS INLETS, DISCHARGE FITTINGS AND CABLE CONNECTORS SHALL BE INCLUDED IN THIS TEST ALONG WITH THEIR RESPECTIVE SEALING MEANS (GROMMETS, GASKETS ETC.).

3.02 INSTALLATION

CONTRACTOR SHALL INSTALL GRINDER PUMP UNITS IN ACCORDANCE WITH THE MANUFACTURER'S DRAWINGS, SHOP DRAWINGS AND INSTRUCTIONS.

3.03 START–UP AND FIELD TESTING

A. THE MANUFACTURER SHALL PROVIDE THE SERVICES OF QUALIFIED FACTORY TRAINED TECHNICIAN(S) WHO SHALL INSPECT THE PLACEMENT AND WIRING OF EACH STATION, PERFORM FIELD TESTS, AND INSTRUCT THE OWNER'S PERSONNEL IN THE OPERATION AND MAINTENANCE OF THE EQUIPMENT BEFORE THE STATIONS ARE ACCEPTED BY THE OWNER.

B. ALL EQUIPMENT AND MATERIALS NECESSARY TO PERFORM TESTING SHALL BE THE RESPONSIBILITY OF THE INSTALLING CONTRACTOR. THIS WILL INCLUDE, AS A MINIMUM, A PORTABLE GENERATOR (IF TEMPORARY POWER IS REQUIRED) AND WATER IN EACH BASIN.

C. THE SERVICES OF A TRAINED FACTORY–AUTHORIZED TECHNICIAN SHALL BE PROVIDED FOR TWO DAYS.

D. UPON COMPLETION OF THE START–UP AND TESTING, THE CONTRACTOR SHALL SUBMIT TO THE ENGINEER THE START–UP AUTHORIZATION FORM DESCRIBING THE RESULTS OF THE TESTS PERFORMED FOR EACH GRINDER PUMP STATION. FINAL ACCEPTANCE OF THE SYSTEM WILL NOT OCCUR UNTIL AUTHORIZATION FORMS HAVE BEEN RECEIVED FOR EACH PUMP STATION INSTALLED AND ANY INSTALLATION DEFICIENCIES CORRECTED.

3.04 MANUALS

THE CONTRACTOR SHALL SUPPLY FOUR (4) COPIES OF OPERATION AND MAINTENANCE MANUALS TO THE OWNER, AND ONE (1) COPY OF THE SAME TO THE ENGINEER.

3.05 WARRANTY

THE CONTRACTOR GUARANTEES AND WARRANTS THAT DURING THE FIRST YEAR OF OPERATION, THE PUMPS WILL OPERATE SATISFACTORILY AND CONTINUOUSLY ACCORDING TO THE PUMP SCHEDULE SPECIFIED HEREIN, AND THAT DUE NOTICE HAS BEEN GIVEN BY THE OWNER, HE OR THE PUMP MANUFACTURER WILL PROCEED, WITHIN A REASONABLE TIME, TO ADJUST, REGULATE, REPAIR AND RENEW AT HIS OWN EXPENSE OR PERFORM SUCH WORK AS IS NECESSARY TO MAINTAIN THE GUARANTEED CAPACITIES, EFFICIENCIES AND PERFORMANCES.

SECTION 02531 - SEWAGE FORCEMAINS

PART 1 – GENERAL

1.01 SCOPE OF WORK

A. PROVIDE ALL LABOR, MATERIALS, EQUIPMENT AND SERVICES REQUIRED FOR FURNISHING AND INSTALLING ALL PIPING AND APPURTENANCES SPECIFIED HEREIN.

1.02 SUBMITTALS

A. SUBMIT MANUFACTURER'S DATA AND SHOP DRAWINGS FOR ALL MATERIALS AND AS SPECIFIED HEREIN. COMPLY WITH ALL REQUIREMENTS OF SECTION 01340.

B. A NOTARIZED CERTIFICATION SHALL BE FURNISHED FOR ALL PIPE AND FITTINGS THAT VERIFIES COMPLIANCE WITH ALL APPLICABLE SPECIFICATIONS. THE REQUIREMENT FOR THIS CERTIFICATION DOES NOT ELIMINATE THE NEED FOR SHOP DRAWINGS SUBMITTALS IN COMPLIANCE WITH SECTION 01340.

1.05 EXISTING CONDITIONS

A. THE EXISTING PIPING SHOWN ON THE CONTRACT DRAWINGS IS BASED ON THE BEST AVAILABLE INFORMATION. THE ENGINEER MAKES NO GUARANTEE AS TO THE ACCURACY OF THE LOCATIONS OR TYPE OF PIPING DEPICTED. ALL NEW PIPING THAT TIES INTO EXISTING LINES MUST BE MADE COMPATIBLE WITH THAT PIPING. SO THAT PIPING CONFLICTS MAY BE AVOIDED, CONTRACTOR SHALL OPEN UP HIS TRENCH WELL AHEAD OF THE PIPE LAYING OPERATION TO CONFIRM EXACT LOCATIONS OF EXISTING PIPING BEFORE INSTALLING ANY NEW PIPING. CONTRACTOR SHALL PROVIDE ALL FITTINGS AND ADAPTERS NECESSARY TO COMPLETE ALL CONNECTIONS TO EXISTING PIPING.

PART 2 – PRODUCTS

2.01 HIGH DENSITY POLYETHYLENE PIPE

A. GENERAL: HIGH DENSITY POLYETHYLENE PIPE SHALL BE "DRISCOPIPE" AS MANUFACTURED BY PHILLIPS PRODUCT COMPANY, INC., PLEXCO AS MANUFACTURED BY CHEVRON, POLYPIPE, OR APPROVED EQUAL.

B. MATERIALS FOR POLYETHYLENE PIPE:

1. PIPE SHALL BE MANUFACTURED FROM A PE 3408 RESIN LISTED WITH THE PLASTIC PIPE INSTITUTE (PPI) AS TR–4. THE RESIN MATERIAL SHALL MEET THE REQUIREMENTS OF ASTM D3350 WITH A MINIMUM CELL CLASSIFICATION OF PE 345564C. PIPES HAVING AN OUTSIDE DIAMETER OF 3.5" AND LARGER SHALL HAVE A MANUFACTURING STANDARD OF ASTM F–714. PIPES SMALLER THAN 3.5" SHALL HAVE A MANUFACTURING STANDARD OF ASTM D 3035. PIPE O.D. SIZES 4" TO 54" SHALL BE AVAILABLE IN STEEL PIPE SIZES (IPS). THE PIPE SHALL CONTAIN NO RECYCLED COMPOUNDS EXCEPT THAT GENERATED IN THE MANUFACTURER'S OWN PLANT FROM RESIN OF THE SAME SPECIFICATION FROM THE SAME RAW MATERIAL. THE PIPE SHALL BE HOMOGENEOUS THROUGHOUT AND FREE OF VISIBLE CRACKS, HOLES, FOREIGN INCLUSIONS, VOIDS, OR OTHER INJURIOUS DEFECTS.
2. PIPE MADE FROM THESE RESINS MUST HAVE A LONG–TERM STRENGTH RATING OF 1,600 PSI OR MORE.
3. THE POLYETHYLENE RESIN SHALL CONTAIN ANTIOXIDANTS AND SHALL BE STABILIZED WITH CARBON BLACK AGAINST ULTRA–VIOLET DEGRADATION TO PROVIDE PROTECTION DURING PROCESSING AND SUBSEQUENT WEATHER EXPOSURE. PIPE SHALL HAVE CONTINOUS GREEN STRIP MARKING IMBEDDED INTO BLACK WALL RESIN OR PIPE SHALL BE GREEN IN COLOR. NO OTHER COLOR SHALL BE ALLOWED FOR SANITARY SEWER PIPE INSTALLATION.
4. THE POLYETHYLENE RESIN COMPOUND SHALL HAVE A RESISTANCE TO ENVIRONMENTAL STRESS CRACKING AS DETERMINED BY THE PROCEDURE DETAILED IN ASTM D 1693, CONDITION B WITH SAMPLE PREPARATION BY PROCEDURE C OF NOT LESS THAN 200 HOURS.

C. POLYETHYLENE PIPE AND FITTINGS:

1. LATERAL TAP – BUTT FUSION FITTINGS SHALL BE IN ACCORDANCE WITH ASTM D3261 AND SHALL BE MANUFACTURED BY INJECTION MOLDING, A COMBINATION OF EXTRUSION AND MACHINING, OR FABRICATED FROM HDPE PIPE CONFORMING TO THIS SPECIFICATION. ALL FITTINGS SHALL BE PRESSURE RATED TO PROVIDE A WORKING PRESSURE RATING NO LESS THAN THAT OF THE PIPE. FABRICATED FITTINGS SHALL BE MANUFACTURED USING A MCELROY DATALOGGER TO RECORD FUSION PRESSURE AND TEMPERATURE. A GRAPHIC REPRESENTATION OF THE TEMPERATURE AND PRESSURE DATA FOR ALL FUSION JOINTS MADE PRODUCING FITTINGS SHALL BE MAINTAINED AS PART OF THE QUALITY CONTROL. THE FITTING SHALL BE HOMOGENEOUS THROUGHOUT AND FREE OF VISIBLE CRACKS, HOLES, FOREIGN INCLUSIONS, VOIDS, OR OTHER INJURIOUS DEFECTS.
2. ELECTROFUSION FITTINGS SHALL BE PE3408 HDPE, CELL CLASSIFICATION OF 345464C AS DETERMINED BY ASTM D3350–02 AND BE THE SAME BASE RESIN AS THE PIPE. ELECTROFUSION FITTINGS SHALL HAVE A MANUFACTURING STANDARD OF ASTM F1055.
3. FLANGED AND MECHANICAL JOINT ADAPTERS: FLANGED AND MECHANICAL JOINT ADAPTERS SHALL BE PE 3408 HDPE, CELL CLASSIFICATION OF 345464C AS DETERMINED BY ASTM D3350–02 AND BE THE SAME BASE RESIN AS THE PIPE. FLANGED AND MECHANICAL JOINT ADAPTERS SHALL HAVE A MANUFACTURING STANDARD OF ASTM D3216. ALL ADAPTERS SHALL BE PRESSURE RATED TO PROVIDE A WORKING PRESSURE RATING NO LESS THAN THAT OF THE PIPE.
4. THE PIPE SHALL BE DESIGNED FOR A NORMAL INTERNAL WORKING PRESSURE AND EARTH COVER OVER TOP OF THE PIPE TO SUIT THE CONDITIONS OF PROPOSED USE.
5. EACH LENGTH OF PIPE SHALL BE MARKED, AT NO MORE THAN 10 FOOT INTERVALS, WITH THE FOLLOWING INFORMATION:

   NOMINAL PIPE SIZE
   TYPE PLASTIC MATERIAL – PE3408
   PIPE PRESSURE RATING
   MANUFACTURER'S NAME, TRADEMARK AND CODE

6. ALL PIPE SHALL BE MADE FROM VIRGIN MATERIAL. NO REWORK COMPOUND
7. PIPE SHALL BE HOMOGENOUS THROUGHOUT, AND BE FREE OF VISIBLE CRACKS, HOLES, FOREIGN MATERIAL, BLISTERS, OR OTHER DELETERIOUS FAULTS.
8. FITTINGS FOR THE POLYETHYLENE PIPE LINE SHALL BE MOLDED OR FABRICATED FROM THE SAME MATERIAL AS SPECIFIED HEREINBEFORE FOR THE HIGH DENSITY POLYETHYLENE PIPE.
9. FITTINGS FOR BENDS 22–1/2° OR GREATER SHALL BE PROVIDED AS SHOWN ON THE DRAWINGS. FOR ALIGNMENT CHANGES OF LESS THAN 20° DEFLECTION, THE PIPE MAY BE LAID IN CURVES WITH A RADIUS OF 100 FEET OR GREATER.
10. ALL RUN–OF–THE–PIPE FITTINGS SHALL BE FUSION WELDED INTO THE PIPELINE. TEE BRANCHES SHALL BE OF THE SIZE SHOWN ON THE DRAWINGS AND SHALL BE FUSION WELDED.
11. FITTINGS SHALL BE CAPABLE OF WITHSTANDING THE SAME PRESSURE AND LOADING CONDITIONS SPECIFIED FOR THE PIPE.
12. WYE BRANCHES SHALL BE TRUE WYES.

D. PIPE JOINTING:

1. PIPE TO BE JOINED BY LEAKPROOF , THERMAL, BUTT FUSION JOINTS. ALL FUSION MUST BE DONE BY PERSONNEL TRAINED BY THE PIPE SUPPLIER USING TOOLS APPROVED BY THE PIPE SUPPLIER.
2. THE FUSION MACHINE SHALL HAVE HYDRAULIC PRESSURE CONTROL FOR FUSING 2 PIPE ENDS TOGETHER; IT SHALL INCLUDE PRESSURE FUSION INDICATING GAUGES TO CORRECTLY MONITOR FUSION PRESSURES. THE MACHINES CORRECTLY MONITOR FUSION PRESSURES. THE MACHINES SHALL BE EQUIPPED WITH AN ELECTRIC OR GASOLINE ENGINE POWERED FACING UNIT TO TRIM IRREGULARITIES FROM THE PIPE ENDS. THE HEATING PLATE ON THE FUSION MACHINE SHALL BE ELECTRICALLY HEATED AND THERMOSTATICALLY CONTROLLED AND SHALL CONTAIN A TEMPERATURE GAUGE FOR MONITORING TEMPERATURE.
3. JOINT STRENGTH MUST BE EQUAL TO THAT OF ADJACENT PIPE AS DEMONSTRATED BY TENSILE TEST. IN ADDITION, RESULTS OF TENSILE IMPACT TESTING OF JOINT SHOULD INDICATE A DUCTILE RATHER THAN A BRITTLE FRACTURE. EXTERNAL APPEARANCE OF FUSION BEAD SHOULD BE SMOOTH WITHOUT SIGNIFICANT JUNCTURE GROOVE.
4. THREADED OR SOLVENT CEMENT JOINTS AND CONNECTIONS ARE NOT PERMITTED.

E. JOINING, TERMINATING OR ADAPTING BY MECHANICAL MEANS:

1. THE POLYETHYLENE PIPE SHALL BE CONNECTED TO SYSTEMS OR FITTINGS OF OTHER MATERIALS BY MEANS OF AN ASSEMBLY CONSISTING OF A POLYETHYLENE FLANGE ADAPTER OR MECHANICAL JOIN ADAPTER BUTT–FUSED TO THE PIPE, A BACKUP RING OF EITHER CAST IRON, STEEL, OR HIGH SILICA ALUMINUM ALLOY MADE TO ANSI B–16.1 DIMENSIONAL STANDARDS (WITH MODIFIED PRESSURE RATINGS), BOLTS OF COMPATIBLE MATERIAL (INSULATED FROM THE FITTINGS WHERE NECESSARY) AND A GASKET OF REINFORCED BLACK RUBBER, OR OTHER MATERIAL APPROVED BY THE ENGINEER, CUT TO FIT THE JOINT. IN ALL CASES, THE BOLTS SHALL BE DRAWING UP EVENLY AND IN LINE.
2. TERMINATION OF VALVES, OR FITTINGS SUCH AS TEES, BONDS, ETC., MADE OF OTHER MATERIALS SHALL BE BY THE FLANGE ASSEMBLIES SPECIFIED HEREINBEFORE. THE PIPE ADJACENT TO THESE JOINTS AND TO JOINTS THEMSELVES MUST BE RIGIDLY SUPPORTED FOR A DISTANCE OF ONE PIPE DIAMETER OR 1 FOOT, WHICHEVER IS GREATER, BEYOND THE FLANGE ASSEMBLY.
3. APPURTENANCES MUST BE PLACED ON THEIR OWN FOUNDATIONS, UNSUPPORTED BY THE PIPE, IN ACCORDANCE WITH THE DETAIL PLANS.

F. TOOLS AND PROCEDURES:

1. FUSION JOINTING AND OTHER PROCEDURES NECESSARY FOR CORRECT ASSEMBLY OF THE POLYETHYLENE PIPE AND FITTINGS WILL BE DONE ONLY BY PERSONNEL TRAINED IN THOSE SKILLS BY THE PIPE SUPPLIER.
2. ONLY THOSE TOOLS DESIGNED FOR AFOREMENTIONED PROCEDURES AND APPROVED BY THE PIPE SUPPLIER SHALL BE USED FOR ASSEMBLY OF PIPE AND FITTINGS TO INSURE PROPER INSTALLATION.

G. STANDARD DIMENSION RATIO (SDR) FOR PIPE:

ALL HDPE PIPE FOR FORCEMAIN APPLICATIONS SHALL BE DR 11 (160 PSI WPR).

2.02 DUCTILE IRON PIPE AND FITTINGS

A. DUCTILE IRON PIPE SHALL CONFORM TO THE CURRENT REQUIREMENTS OF AWWA C151, PRESSURE CLASS 350, WITH PUSH_ON JOINTS UNLESS OTHERWISE NOTED ON DRAWINGS.

B. THE INTERIOR OF THE PIPE SHALL BE COATED IN ACCORDANCE WITH THE CURRENT REQUIREMENTS OF AWWA C104. THICKNESS OF THE LINING SHALL BE SET FORTH PER AWWA C104 UNLESS OTHERWISE DIRECTED BY THE ENGINEER. THE EXTERIOR OF ALL PIPE, UNLESS OTHERWISE SPECIFIED, SHALL BE COATED, REFER TO PROTECTO 401, INDUSTRY STANDARD.

C. EACH PIECE OF PIPE SHALL BEAR THE MANUFACTURER'S NAME OR TRADEMARK, THE YEAR IN WHICH IT WAS PRODUCED AND THE LETTERS "DI" OR THE WORD "DUCTILE". PIPE MANUFACTURER SHALL FURNISH NOTARIZED CERTIFICATE OF COMPLIANCE TO THE ABOVE AWWA OR ANSI SPECIFICATIONS. FITTINGS SHALL BE DUCTILE IRON AND RATED FOR A MINIMUM OF 350 PSI IN ACCORDANCE WITH THE CURRENT REQUIREMENTS OF AWWA C110 (ANSI A21.10) SHOWN THEREIN. FITTINGS SHALL HAVE MECHANICAL JOINTS MEETING THE CURRENT REQUIREMENTS OF AWWA C111 (ANSI A21.11). FITTINGS SHALL HAVE INTERIOR CEMENT_MORTAR LINING AS SPECIFIED FOR THE PIPE. COMPACT DUCTILE IRON FITTINGS MEETING THE CURRENT REQUIREMENTS OF AWWA C153 WILL ALSO BE ACCEPTABLE. PROVIDE NOTARIZED CERTIFICATE OF COMPLIANCE TO THE AWWA SPECIFICATIONS.

D. PROVIDE AWWA C110 MECHANICAL JOINT PLUGS AND LOCKED OR RESTRAINED PIPE JOINTS FOR DUCTILE IRON PIPE AND FITTINGS BETWEEN VALVE VAULT AND CONNECTION TO HDPE FORCEMAIN. ACCEPTABLE MECHANICAL RESTRAINTS FOR RESTRAINING DIP MECHANICAL JOINT FITTINGS INCLUDE: EBAA SERIES 1100, UNI–FLANGE SERIES 1400, AND UNI–FLANGE SERIES 1300–C. ACCEPTABLE MECHANICAL RESTRAINTS FOR RESTRAINING MECHANICAL DIP JOINTS INCLUDE: EBAA MEGALUG, EBAA SERIES 3100, UNI–FLANGE SERIES 1300–C, AND UNI–FLANGE SERIES 1400. FITTINGS UNDER STRUCTURES SHALL BE MECHANICAL JOINT WITH RETAINER GLANDS.

E. THE CLEANING AND ASSEMBLY OF PIPE AND FITTING JOINTS SHALL BE IN ACCORDANCE WITH THE MANUFACTURER'S RECOMMENDATIONS.

2.03 COUPLING AND ADAPTORS

A. FLEXIBLE COUPLINGS SHALL BE OF THE SLEEVE TYPE WITH A MIDDLE RING, TWO ROUND_WEDGE SHAPED RUBBER GASKETS AT EACH END, TWO FOLLOWING RINGS TOGETHER AND COMPRESS THE GASKET AGAINST THE PIPE. FLEXIBLE COUPLINGS SHALL BE STEEL WITH MINIMUM WALL THICKNESS OF THE MIDDLE RING OR SLEEVE INSTALLED ON PIPE BEING 5/16_INCH FOR PIPE SMALLER THAN 10 INCHES, 3/8_INCH FOR PIPE 10 INCHES OR LARGER. THE MINIMUM LENGTH OF THE MIDDLE RING SHALL BE 5_INCHES FOR PIPE SIZES UP TO 10 INCHES AND 7 INCHES FOR PIPE 10 INCHES TO 30 INCHES. THE PIPE STOP SHALL BE REMOVED. GASKETS SHALL BE SUITABLE FOR 250 PSI PRESSURE RATING OR AT RATED WORKING PRESSURE OF THE CONNECTING PIPE. COUPLINGS SHALL BE HARNESSED AND BE DESIGNED FOR 250 PSI.

B. FLANGED ADAPTERS SHALL HAVE ONE END SUITABLE FOR BOLTING TO A PIPE FLANGE AND THE OTHER END OF FLEXIBLE COUPLING SIMILAR TO THAT DESCRIBED HEREINBEFORE. ALL PRESSURE PIPING WITH COUPLINGS OR ADAPTERS SHALL BE HARNESSED WITH FULL THREADED RODS SPANNING ACROSS THE COUPLINGS OR ADAPTERS. THE ADAPTERS SHALL BE FURNISHED WITH BOLTS OF AN APPROVED CORROSION RESISTANT STEEL ALLOY, EXTENDING TO THE ADJACENT PIPE FLANGES. FLANGES ON FLANGED ADAPTER (UNLESS OTHERWISE INDICATED OR REQUIRED) SHALL BE FACED AND DRILLED ANSI B16.1 CLASS 125.

C. FLEXIBLE COUPLINGS AND FLANGED ADAPTERS SHALL BE AS MANUFACTURED BY DRESSER, ROCKWELL, OR APPROVED EQUAL, PER THE FOLLOWING, UNLESS OTHERWISE SPECIFIED AND/OR NOTED ON THE DRAWINGS:

D. STEEL COUPLINGS FOR JOINING SAME SIZE, PLAIN_END, STEEL, CAST IRON, AND PVC PLASTIC PIPE

DRESSER	ROCKWELL
STYLE 138	4LL

E. TRANSITION COUPLINGS FOR JOINING PIPE OF DIFFERENT OUTSIDE DIAMETERS_

DRESSER	ROCKWELL
STYLE 162 (4"_12")	13 STEEL (2"_24")
STYLE 62 (2"_24")	415 STEEL (6"_48")
	433 CAST (2"_16")
	435 CAST (2"_12")

F. FLANGED ADAPTERS FOR JOINING PLAIN_END PIPE TO FLANGED PIPE, FITTINGS, VALVES AND EQUIPMENT.

DRESSER	ROCKWELL
STYLE 127 CAST (3"_12")	912 CAST (3"_12")
STYLE 128 STEEL (3"_48" C.I. PIPE)	913 STEEL (3" AND LARGER)
STYLE 128 STEEL (2"_96" STEEL PIPE)	

2.04 FLANGED JOINTS

A. FLANGED JOINTS SHALL BE AS SPECIFIED IN SECTION 02531 OF THESE SPECIFICATIONS. DIMENSIONS SHALL BE AS NOTED ON THE DRAWINGS.

2.05 PLUG VALVES

A. ALL PLUG VALVES SHALL BE ECCENTRIC PLUG VALVES UNLESS OTHERWISE SPECIFIED.

B. VALVES SHALL BE OF THE NON–LUBRICATED ECCENTRIC TYPE WITH RESILIENT FACED PLUGS AND SHALL BE FURNISHED WITH END CONNECTIONS AS SHOWN ON THE PLANS. FLANGED VALVES SHALL BE FACED AND DRILLED TO THE ANSI 125/150 LB. STANDARD. MECHANICAL JOINT ENDS SHALL BE TO THE AWWA STANDARD C111–64, GROOVED ENDS PER AWWA C–606–87. SCREWED ENDS SHALL BE TO THE NPT STANDARD.

C. VALVE BODIES SHALL BE OF ASTM A126 CLASS B CAST IRON. BODIES IN 4" AND LARGER VALVES SHALL BE FURNISHED WITH A 1/8" WELDED OVERLAY SEAT OF NOT LESS THAN 90% PURE NICKEL. SEAT AREA SHALL BE RAISED, WITH RAISED SURFACE COMPLETELY COVERED WITH WELD TO INSURE THAT THE PLUG FACE CONTACTS ONLY NICKEL. SCREWED–IN SEATS SHALL NOT BE ACCEPTABLE.

D. PLUGS SHALL BE OF ASTM A126 CLASS B CAST IRON. THE PLUG SHALL HAVE A CYLINDRICAL SEATING SURFACE ECCENTRICALLY OFFSET FROM THE CENTER OF THE PLUG SHAFT. THE INTERFERENCE BETWEEN THE PLUG FACE AND BODY SEAT, WITH THE PLUG IN THE CLOSED POSITION, SHALL BE EXTERNALLY ADJUSTABLE IN THE FIELD WITH THE VALVE IN THE LINE UNDER PRESSURE. PLUG SHALL BE RESILIENT FACED WITH NEOPRENE OR HYCAR, SUITABLE FOR USE WITH SEWAGE.

E. VALVES SHALL HAVE SLEEVE TYPE METAL BEARINGS AND SHALL BE OF SINTERED, OIL IMPREGNATED PERMANENTLY LUBRICATED TYPE 316 ASTM A743 GRADE CF–8M IN ½" SIZES. IN VALVES LARGER THAN 36", THE UPPER AND LOWER PLUG JOURNALS SHALL BE FITTED WITH ASTM A–240 TYPE 316 STAINLESS SLEEVES WITH BEARINGS OF ASTM B30, ALLOY C95400 ALUMINUM BRONZE. NON–METALLIC BEARINGS SHALL NOT BE ACCEPTABLE.

F. VALVE SHAFT SEALS SHALL BE OF THE MULTIPLE V–RING TYPE AND SHALL BE EXTERNALLY ADJUSTABLE AND REPACKABLE WITHOUT REMOVING THE BONNET OR ACTUATOR FROM THE VALVE UNDER PRESSURE. VALVES UTILIZING O–RING SEALS OR NON–ADJUSTABLE PACKING SHALL NOT BE ACCEPTABLE.

G. VALVE PRESSURE RATINGS SHALL BE 175 PSI THROUGH 12" AND 150 PSI FOR 14" THROUGH 72". EACH VALVE SHALL BE GIVEN A HYDROSTATIC AND SEAT TEST WITH TEST RESULTS BEING CERTIFIED WHEN REQUIRED BY THE SPECIFICATIONS.

Know what's **below.**
Call before you dig.

Within Indiana Call
811 or 800–382–5544
24 Hours a Day, 7 Days a Week.

PER INDIANA STATE LAW IC 8–1–26. IT IS AGAINST THE LAW TO EXCAVATE WITHOUT NOTIFYING THE UNDERGROUND LOCATION SERVICE TWO (2) WORKING DAYS BEFORE COMMENCING WORK.

PRELIMINARY CONSTRUCTION PLANS

WEIHE ENGINEERS
Land Surveying | Civil Engineering
Landscape Architecture

10505 N. College Avenue
Indianapolis, Indiana 46280
weihe.net

317 | 846 - 6611
800 | 452 - 6408
317 | 843 - 0546 *fax*

ALLAN H. WEIHE, P.E., L.S. - FOUNDER

PROJECT NO.: W12.0262
DWG NAME: 120262-C301 spec.dwg
DESIGNED BY: EAC/MG
DRAWN BY: EAC/MG
CHECKED BY: JKS
DATE: 06.29.2012

REVISIONS AND ISSUES	DATE	BY

JAMES K. SHINNEMAN REGISTERED NO. 10200392 STATE OF INDIANA PROFESSIONAL ENGINEER
APPROVAL PENDING NOT FOR CONSTRUCTION

JAMES K. SHINNEMAN P.E. 10200392

PREPARED FOR:
EPIPHANY EVANGELICAL LUTHERAN CHURCH PHASE ONE
156TH AND DITCH ROAD, WESTFIELD IN
SPECIFICATIONS
Part of the SE Corner of SW/1/4 of Section 10, Township 18 North, Range 3 East, Washington Township, Hamilton County, Indiana

SHEET NO.
C302

PROJECT NO.
W12.0262

LOCATION: H:\2012\w120262\Engineering\design\conset\120262-C301 spec.dwg
LAYOUT: C302 – SPECS
DATE/TIME: June 29, 2012 – 7:59am
PLOTTED BY: cartere

H. MANUAL VALVES SHALL HAVE LEVER OR GEAR ACTUATORS AND TEE WRENCHES, EXTENSION STEMS, FLOORSTANDS, ETC., AS INDICATED ON THE PLANS. ALL VALVES 6" AND LARGER SHALL BE EQUIPPED WITH GEAR ACTUATORS. ALL GEARING SHALL BE ENCLOSED IN A SEMI-STEEL HOUSING AND BE SUITABLE FOR RUNNING IN A LUBRICANT WITH SEALS PROVIDED ON ALL SHAFTS TO PREVENT ENTRY OF DIRT AND WATER INTO THE ACTUATOR. THE ACTUATOR SHAFT AND THE QUADRANT SHALL BE SUPPORTED ON PERMANENTLY LUBRICATED BRONZE BEARINGS. ACTUATORS SHALL CLEARLY INDICATE VALVE POSITION AND AN ADJUSTABLE STOP SHALL BE PROVIDED TO SET CLOSING TORQUE AND TO PROVIDE SEAT ADJUSTMENT TO COMPENSATE FOR CHANGE IN PRESSURE DIFFERENTIAL OR FLOW DIRECTION CHANGE. ALL EXPOSED NUTS, BOLTS AND WASHERS SHALL BE ZINC PLATED.

I. VALVES AND GEAR ACTUATORS FOR BURIED OR SUBMERGED SERVICE SHALL HAVE SEALS OR ALL SHAFTS AND GASKETS ON THE VALVE AND ACTUATOR COVERS TO PREVENT THE ENTRY OF WATER. ACTUATOR MOUNTING BRACKETS FOR BURIED OR SUBMERGED SERVICE SHALL BE TOTALLY ENCLOSED AND SHALL HAVE GASKET SEALS. ALL EXPOSED NUTS, BOLTS, SPRINGS AND WASHERS SHALL BE STAINLESS STEEL.

J. ACTUATORS SHALL BE EQUIPPED WITH AN OPERATING NUT TO ALLOW MANUAL VALVE OPERATION IN CASE OF SUPPLY FAILURE.

K. ALL VALVES AND ACTUATORS SHALL BE AS MANUFACTURED BY DEZURIK, PRATT, VAL-MATIC OR APPROVED EQUAL.

L. ALL BURIED SERVICE PLUG VALVES SHALL HAVE MECHANICAL JOINT ENDS, HAVE ALL EXTERIOR SURFACES SHOP PAINTED WITH TWO COATS OF FED. SPEC. TT-C-494A ASPHALT VARNISH WITH 2-INCH SQUARE NUT OPERATOR IN A VERTICAL POSITION FOR USE IN A VALVE BOX. PROVIDE NUT OPERATOR STEM EXTENSION FOR ALL PLUG VALVES BURIED DEEPER THAN 5 FEET, SUFFICIENT TO RAISE OPERATOR NUT TO WITHIN 3 FEET OF FINISHED GRADE.

2.06 VALVE BOXES

A. VALVE BOXES SHALL BE OF 6 INCH PVC PIPE WITH DROP COVER MARKED "SEWER". COVERS TO BE MANUFACTURED BY SIGMA CORPORATION (VB-2841S) OR APPROVED EQUAL. VALVE BOXES SHALL BE ACCURATELY CENTERED OVER VALVE OPERATING NUT, AND BACKFILL THOROUGHLY TAMPED ABOUT THEM. VALVE BOXES SHALL NOT REST ON THE VALVES BUT SHALL BE SUPPORTED ON BLOCKS AND CRUSHED STONE FILL. THEY SHALL BE SET VERTICALLY AND PROPERLY CUT AND/OR ADJUSTED SO THAT THE TOPS OF BOXES WILL BE GRADE IN ANY PAVING, WALK OR ROAD SURFACE, AND 2 TO 3 INCHES ABOVE FINISH GRADE IN GRASS PLOTS, FIELDS, WOODS OR OTHER OPEN TERRAIN. IN GRASS AREAS, MOUND AROUND VALVE BOX SO THERE IS A SLIGHT CROWN IN ALL DIRECTIONS TO SHED WATER.

2.07 SEWAGE COMBINATION AIR RELEASE VALVES

A. VALVES SHALL BE INSTALLED AT THE HIGH POINTS OF THE FORCE MAIN OR AT LOCATIONS SELECTED BY THE ENGINEER. THIS WILL PERMIT DISCHARGING THE SURGE OF AIR FROM AN EMPTY LINE WHEN FILLING AND RELIEVE THE VACUUM WHEN DRAINING THE SYSTEM. VALVE SHALL ALSO RELEASE AN ACCUMULATION OF AIR WHEN THE SYSTEM IS UNDER PRESSURE. THIS SHALL BE ACCOMPLISHED IN A SINGLE VALVE BODY.

B. THE VALVE SHALL OPERATE THROUGH A COMPOUND LEVER SYSTEM THAT WILL SEAL BOTH THE PRESSURE ORIFICE AND THE AIR AND VACUUM ORIFICE SIMULTANEOUSLY.

C. THE VALVE SHALL BE CONNECTED TO THE FORCEMAIN BY FLANGED DUCTILE IRON PIPE AND/OR FITTINGS AS SHOWN ON THE DRAWINGS. VALVES SHALL BE DESIGNED FOR WORKING PRESSURES BELOW 40 PSI. AN ISOLATION GATE VALVE OF THE SIZE INDICATED ON THE DRAWINGS SHALL BE FURNISHED AND INSTALLED BETWEEN THE VALVE AND MAIN CONNECTION.

C. VALVE BODY SHALL BE CAST IRON. THE INTERNAL LINKAGE AND FLOAT SHALL BE STAINLESS STEEL. THE VALVES SHALL BE 2" NPT SCREWED AS ANSI CLASS 125 FLANGED INLET CONNECTION.

D. VALVES SHALL BE SUPPLIED WITH BACKFLUSHING ATTACHMENTS SO THAT THE INTERIOR BODY CAN BE FLUSHED PERIODICALLY FOR PROPER OPERATION AND A "PROTECTOP" TO PREVENT DIRT AND DEBRIS FROM ENTERING THE OUTLET OF THE VALVE.

F. SEWAGE AIR/VACUUM RELEASE VALVES SHALL BE A.R.I. D-025 AS MANUFACTURED BY A.R.I.FLOW CONTROL ACCESSORIES, KIBBUTZ KFAR CHARVV, ISRAEL OR APPROVED EQUAL.

2.08 CONCRETE PIPE ANCHORS, THRUST BLOCKS, CRADLE OR ENCASEMENT

A. WHERE INDICATED ON THE DRAWINGS, REQUIRED BY THE SPECIFICATIONS OR AS DIRECTED BY THE ENGINEER, CONCRETE PIPE ANCHORS, THRUST BLOCKS, CRADLES OR ENCASEMENTS SHALL BE INSTALLED. CONCRETE SHALL BE 2000 PSI, AND REINFORCING BARS SHALL BE AS INSTALLED AS INDICATED ON THE DETAILS.

2.09 CURB STOP ASSEMBLY

A. BRASS COMPONENTS: ALL BRASS VALVE AND FITTING COMPONENTS ARE TO MEET ASTM SPECIFICATION B62-63-B505Q AND THE AWWA STANDARD C800 AND CONFORM TO ANSI B16.26. COMPONENTS SHALL BE MADE FROM BRASS ALLOY CDA 89520. ALL BRASS COMPONENTS SHALL BE INDIVIDUALLY TESTED WITH INTERNAL AIR PRESSURE OF 150 MIN. PSI.

B. ALL PIPE CONNECTIONS SHALL BE MADE USING PACK JOINT CONNECTIONS INCLUDING A BUNA-N BEVELED GASKET FOR SEALING TO THE OUTSIDE DIAMETER OF THE PIPE. A SPLIT CLAMP LOCKING DEVICE WITH STAINLESS STEEL HARDWARE SHALL BE INTEGRATED INTO ALL CONNECTION FITTINGS TO SECURELY RESTRAIN THE PIPE FROM HYDRAULIC PRESSURE AND EXTERNAL LOADING CAUSED BY SHIFTING AND SETTLING. STAINLESS STEEL INSERT STIFFENERS SHALL BE PROVIDED FOR ALL PACK JOINT CONNECTION FITTINGS TO BE USED WITH HDPE PIPE.

C. BRASS VALVES SHALL BE PRESSURE TIGHT IN BOTH DIRECTIONS WITH INTEGRAL STOPS AT THE FULLY-CLOSED AND FULLY-OPEN POSITIONS. THE TEE-HEAD AND STEM SHALL BE CONSTRUCTED OF A SINGLE, SOLID PIECE TO ASSURE RELIABLE OPERATION. THE STEM SHALL BE SECURED INTO THE VALVE BODY USING EITHER A BRONZE OR PLASTIC RING. BUNA-N O-RINGS SHALL BE USED TO PROVIDE A REDUNDANT, WATERTIGHT SEAL ON THE STEM. A SPHERICAL, FLUOROCARBON-COATED BRASS BALL SHALL BE SUPPORTED IN MOLDED, BUNA-N RUBBER SEATS TO PROVIDE WATERTIGHT SEALS IN EITHER DIRECTION, AS WELL AS MAXIMUM FLOW CAPACITY AND EASE OF OPERATION. VALVES SHALL BE DESIGNED TO WITHSTAND A WORKING PRESSURE OF 150 PSI MINIMUM.

D. CHECK VALVES: CHECK VALVES SHALL BE INJECTION MOLDED FROM NON-CORRODING, GLASS FIBER REINFORCED PVC FOR DURABILITY. THE CHECK VALVE FLAPPER SHALL INCLUDE A NON-FOULING, INTEGRAL HINGE MADE FROM FABRIC REINFORCED SYNTHETIC ELASTOMER TO ASSURE CORROSION RESISTANCE, DIMENSIONAL STABILITY, FATIGUE STRENGTH AND TROUBLE FREE OPERATION. THE CHECK VALVE WILL PROVIDE A FULL-PORTED PASSAGEWAY AND SHALL INTRODUCE A FRICTION LOSS OF LESS THAN 6 INCHES OF WATER AT MAXIMUM RATED FLOW. A NONMETALLIC HINGE SHALL BE AN INTEGRAL PART OF THE FLAPPER ASSEMBLY PROVIDING A MAXIMUM DEGREE OF FREEDOM TO ASSURE SEATING AT LOW BACK PRESSURE.

E. CURB BOXES SHALL BE CONSTRUCTED OF CAST IRON AND STEEL PIPE. ALL COMPONENTS SHALL BE HEAVILY COATED WITH ASPHALT PAINT TO ASSURE DURABILITY IN THE GROUND. CURB BOXES SHALL PROVIDE 12" OF HEIGHT ADJUSTMENT DOWNWARD (SHORTER) FROM THEIR EXTENDED HEIGHT.

F. THE VALVE SHALL OPERATE THROUGH A COMPOUND LEVER SYSTEM THAT WILL SEAL BOTH THE PRESSURE ORIFICE AND THE AIR AND VACUUM ORIFICE SIMULTANEOUSLY.

2.10 FLUSHING STATION

A. FLUSHING STATIONS SHALL BE CONSTRUCTED OF POLYETHYLENE AND 20" MIN. DIAMETER. FRAMES AND COVERS SHALL BE CAST IRON AND LABELED "SEWER" AND BE THE "DROP-IN" TYPE. LOCKING COVERS ARE NOT PERMITTED. FLUSHING STATIONS SHALL BE INSTALLED WITHIN THE RIGHT-OF-WAY OR EASEMENT LINE. FLUSHING STATIONS SHALL BE INSTALLED VERTICALLY AND SHALL BE PERFECTLY CENTER OVER THE 3" CAM-LOCK. FLUSHING STATIONS SHALL NEVER BE INSTALLED IN ANY SIDEWALK, OR IN A DRIVEWAY IN THE AREA WHERE THE PUBLIC SIDEWALK CROSSES THE DRIVEWAY. FLUSHING STATIONS SHALL BE INSTALLED SUCH THAT THE TOP OF THE BOX IS FLUSH WITH THE DIRT SURFACE. FLUSHING STATIONS SHALL NEVER POSE A TRIP HAZARD OR POSE A POTENTIAL THREAT OF DAMAGE TO LAWN MOWERS. THE CAST IRON FRAME SHALL BE CENTERED ON THE BOX.

PART 3 - EXECUTION

3.01 INSTALLATION OF VALVES AND FITTINGS

A. ALL VALVES SHALL BE INSTALLED IN ACCORDANCE WITH DETAILS ON THE CONTRACT DRAWINGS AND WITH THE MANUFACTURER'S RECOMMENDATIONS.

B. ALL VALVES SHALL BE ANCHORED IN ACCORDANCE WITH THE DETAILS ON THE CONTRACT DRAWINGS.

3.02 PIPELINE INSTALLATION

A. UNLESS OTHERWISE DIRECTED BY THE ENGINEER, ALL PIPES ARE TO BE DIRECTIONALLY DRILLED. THE REQUIREMENT FOR THIS INSTALLATION SHALL BE IN COMPLIANCE WITH SECTION 02420.

3.03 BACKFILLING OF EXCAVATION PITS

A. BACKFILLING OF PIPELINE TRENCHES SHALL BE ACCOMPLISHED WITH THE REQUIREMENTS SET FORTH IN "EARTHWORK" SECTION 02300 AS SHOWN ON THE DRAWINGS AND WITH DETAILS SET FORTH HEREINAFTER.

B. METHOD "A" - BACKFILLING IN OPEN TERRAIN:

BACKFILLING OF PIPELINE TRENCHES IN OPEN TERRAIN SHALL BE ACCOMPLISHED IN THE FOLLOWING MANNER:

1. THE PRIMARY BACKFILL SHALL BE AS SPECIFIED IN PARAGRAPH 3.02 "PIPE BEDDING". THIS MATERIAL SHALL BE PLACED IN A MANNER APPROVED BY THE ENGINEER, AND SHALL BE CAREFULLY COMPACTED TO AVOID DISPLACEMENT OF THE PIPE. COMPACTION SHALL BE ACCOMPLISHED BY HAND-TAMPING OR BY APPROVED MECHANICAL METHODS.

2. THE SECONDARY BACKFILL (UPPER PORTION OF THE TRENCH ABOVE THE PRIMARY BACKFILL) SHALL BE BACKFILLED WITH MATERIAL THAT IS FREE FROM LARGE ROCK (COMMON FILL). INCORPORATION OF ROCK HAVING A VOLUME EXCEEDING ONE-HALF CUBIC FOOT IS PROHIBITED. BACKFILLING THIS PORTION OF THE TRENCH MAY BE ACCOMPLISHED BY ANY MEANS APPROVED BY THE ENGINEER. THE TRENCH BACKFILL SHALL BE HEAPED OVER OR LEVELED AS DIRECTED BY THE ENGINEER.

C. METHOD "B" - BACKFILLING STONE DRIVEWAYS AND STREET REPAIR:

BACKFILLING OF PIPELINE TRENCHES UNDER STONE DRIVEWAYS STREET REPAIRS SHALL BE ACCOMPLISHED IN THE FOLLOWING MANNER.

1. THE PRIMARY BACKFILL SHALL BE AS SPECIFIED IN PARAGRAPH 3.02 "PIPE BEDDING". THIS MATERIAL SHALL BE PLACED IN A MANNER APPROVED BY THE ENGINEER, AND SHALL BE CAREFULLY COMPACTED TO AVOID DISPLACEMENT OF THE PIPE. COMPACTION SHALL BE ACCOMPLISHED BY HAND-TAMPING OR BY APPROVED MECHANICAL METHODS.

2. THE SECONDARY BACKFILL (UPPER PORTION OF THE TRENCH ABOVE THE PRIMARY BACKFILL) TO A POINT 6" BELOW THE GRADE LINE, SHALL BE BACKFILLED WITH CLEAN GRANULAR MATERIAL PER REQUIREMENTS OF INDIANA DEPARTMENT OF TRANSPORTATION FOR STRUCTURAL FILL. MATERIAL SHALL BE COMPACTED AS SET FORTH IN DIVISION 2300: EARTHWORK SECTION 3.06: COMPACTION OR AS DIRECTED BY THE ENGINEER.

3. THE UPPER PORTION OF THE TRENCH FROM THE TOP OF THE SECONDARY BACKFILL TO THE EXISTING GRADE LINE SHALL BE BACKFILLED AND MAINTAINED WITH NO. 53 STONE. UNTIL FINAL ACCEPTANCE OF THE WORK.

D. METHOD "C" - BACKFILLING UNDER PAVED DRIVEWAYS:

BACKFILLING OF PIPELINE TRENCHES UNDER PAVED DRIVEWAYS SHALL BE ACCOMPLISHED IN THE FOLLOWING MANNER:

1. THE PRIMARY BACKFILL SHALL BE AS SPECIFIED IN PARAGRAPH 3.02 "PIPE BEDDING". THIS MATERIAL SHALL BE PLACED IN A MANNER APPROVED BY THE ENGINEER, AND SHALL BE CAREFULLY COMPACTED TO AVOID DISPLACEMENT OF THE PIPE. COMPACTION SHALL BE ACCOMPLISHED BY HAND-TAMPING OR BY APPROVED MECHANICAL METHODS.

2. THE SECONDARY BACKFILL (UPPER PORTION OF THE TRENCH ABOVE THE PRIMARY BACKFILL) TO A POINT MINIMUM 8 ½" BELOW THE EXISTING GRADE LINE FOR ASPHALT DRIVEWAYS AND MINIMUM 10" BELOW THE GRADE LINE FOR CONCRETE DRIVEWAYS, SHALL BE BACKFILLED WITH CLEAN GRANULAR MATERIAL PER REQUIREMENTS OF INDIANA DEPARTMENT OF TRANSPORTATION FOR STRUCTURAL FILL. MATERIAL SHALL BE COMPACTED AS SET FORTH IN SECTION 2300: EARTHWORK SECTION 3.06: COMPACTION OR AS DIRECTED BY THE ENGINEER.

3. THE UPPER PORTION OF THE TRENCH FROM THE TOP OF THE SECONDARY BACKFILL, SHALL BE BACKFILLED WITH A BASE COURSE OF DENSE GRADED AGGREGATE. AT SUCH TIME THAT PAVEMENT REPLACEMENT IS ACCOMPLISHED, THE EXCESS BASE COURSE SHALL BE REMOVED AS REQUIRED.

E. METHOD "D" - BACKFILLING UNDER ASPHALT ROADS

BACKFILLING OF PIPELINE TRENCHES UNDER ASPHALT ROADS SHALL BE ACCOMPLISHED IN THE FOLLOWING MANNER:

1. THE PRIMARY BACKFILL SHALL BE AS SPECIFIED IN PARAGRAPH 3.02 "PIPE BEDDING". THIS MATERIAL SHALL BE PLACED IN A MANNER APPROVED BY THE ENGINEER, AND SHALL BE CAREFULLY COMPACTED TO AVOID DISPLACEMENT OF THE PIPE. COMPACTION SHALL BE ACCOMPLISHED BY HAND-TAMPING OR BY APPROVED MECHANICAL METHODS.

2. THE SECONDARY BACKFILL (UPPER PORTION OF THE TRENCH ABOVE THE PRIMARY BACKFILL) TO A POINT MINIMUM 7" BELOW BOTTOM OF EXISTING GRADE LINE FOR ASPHALT ROADS, SHALL BE BACKFILLED WITH CLEAN GRANULAR MATERIAL PER REQUIREMENTS OF INDIANA DEPARTMENT OF TRANSPORTATION FOR STRUCTURAL FILL. MATERIAL SHALL BE COMPACTED AS SET FORTH IN DIVISION 2300: EARTHWORK SECTION 3.06: COMPACTION OR AS DIRECTED BY THE ENGINEER.

3. THE UPPER PORTION OF THE TRENCH FROM THE TOP OF THE SECONDARY BACKFILL, SHALL BE BACKFILLED WITH A BASE COURSE OF DENSE GRADED AGGREGATE. AT SUCH TIME THAT PAVEMENT REPLACEMENT IS ACCOMPLISHED, THE EXCESS BASE COURSE SHALL BE REMOVED AS REQUIRED.

F. METHOD "E" - BACKFILLING UNDER CONCRETE DRIVEWAYS AND SIDEWALKS:

BACKFILLING OF PIPELINE TRENCHES UNDER CONCRETE DRIVEWAYS AND SIDEWALKS SHALL BE ACCOMPLISHED IN THE FOLLOWING MANNER:

1. THE PRIMARY BACKFILL SHALL BE AS SPECIFIED IN PARAGRAPH 3.02 "PIPE BEDDING". THIS MATERIAL SHALL BE PLACED IN A MANNER APPROVED BY THE ENGINEER, AND SHALL BE CAREFULLY COMPACTED TO AVOID DISPLACEMENT OF THE PIPE. COMPACTION SHALL BE ACCOMPLISHED BY HAND-TAMPING OR BY APPROVED MECHANICAL METHODS.

2. THE SECONDARY BACKFILL (UPPER PORTION OF THE TRENCH ABOVE THE PRIMARY BACKFILL) TO A POINT MINIMUM 10" BELOW THE GRADE LINE FOR CONCRETE DRIVEWAYS AND MINIMUM 8" BELOW THE GRADE LINE FOR CONCRETE SIDEWALKS, SHALL BE BACKFILLED WITH CLEAN GRANULAR MATERIAL PER REQUIREMENTS OF INDIANA DEPARTMENT OF TRANSPORTATION FOR STRUCTURAL FILL. MATERIAL SHALL BE COMPACTED AS SET FORTH IN SECTION 2300: EARTHWORK SECTION 3.06: COMPACTION OR AS DIRECTED BY THE ENGINEER.

3. THE UPPER PORTION OF THE TRENCH FROM THE TOP OF THE SECONDARY BACKFILL, SHALL BE BACKFILLED WITH A BASE COURSE OF DENSE GRADED AGGREGATE. AT SUCH TIME THAT PAVEMENT REPLACEMENT IS ACCOMPLISHED, THE EXCESS BASE COURSE SHALL BE REMOVED AS REQUIRED.

C. BEFORE FINAL ACCEPTANCE, THE CONTRACTOR WILL BE REQUIRED TO LEVEL OFF ALL TRENCHES OR TO BRING THE TRENCH UP TO GRADE. THE CONTRACTOR SHALL ALSO REMOVE FROM ROADWAYS, RIGHTS-OF-WAYS AND/OR PRIVATE PROPERTY ALL EXCESS EARTH OR OTHER MATERIALS RESULTING FROM CONSTRUCTION.

D. IN THE EVENT THAT PAVEMENT IS NOT PLACED IMMEDIATELY FOLLOWING TRENCH BACKFILLING IN STREETS AND HIGHWAYS, THE CONTRACTOR SHALL BE RESPONSIBLE FOR MAINTAINING THE TRENCH SURFACE IN A LEVEL CONDITION AT PROPER PAVEMENT GRADE AT ALL TIMES.

3.07 SETTLEMENT OF TRENCHES

A. WHENEVER LINES ARE IN, OR CROSS, DRIVEWAYS AND STREETS, THE CONTRACTOR SHALL BE RESPONSIBLE FOR ANY TRENCH SETTLEMENT WHICH OCCURS WITHIN THESE RIGHTS-OF-WAY WITHIN THREE YEARS FROM THE TIME OF FINAL ACCEPTANCE OF THE WORK. IF PAVING SHALL REQUIRE REPLACEMENT BECAUSE OF TRENCH SETTLEMENT WITHIN THIS TIME, IT SHALL BE REPLACED BY THE CONTRACTOR AT NO EXTRA COST TO THE OWNER. REPAIR OF SETTLEMENT DAMAGE SHALL MEET THE APPROVAL OF THE OWNER AND/OR THE COUNTY.

3.08 CONCRETE THRUST BLOCKS, CRADLE, ANCHORS OR ENCASEMENT

A. CONCRETE THRUST BLOCKS, CRADLE, ANCHORS OR ENCASEMENT SHALL BE PLACED WHERE SHOWN ON THE DRAWINGS, REQUIRED BY THE SPECIFICATIONS, OR AS DIRECTED BY THE ENGINEER.

B. FOR CRADLE AND ENCASEMENT, CONCRETE SHALL BE 2000 PSI AND SHALL BE MIXED SUFFICIENTLY WET TO PERMIT IT TO FLOW UNDER THE PIPE TO FORM A CONTINUOUS BED.

C. FOR THRUST BLOCKS AND ANCHORS, CONCRETE SHALL BE 2000 PSI, AND SHALL BE FORMED OR BE SUFFICIENTLY STIFF TO MAINTAIN THE FORMS INDICATED ON THE DETAILS.

D. WHEN TAMPING CONCRETE, CARE SHALL BE TAKEN NOT TO DISTURB THE GRADE OR LINE OF THE PIPE OR INJURE THE JOINTS. CONCRETE PLACED OUTSIDE THE SPECIFIED LIMITS OR WITHOUT AUTHORIZATION FROM THE ENGINEER WILL NOT BE SUBJECT TO PAYMENT.

3.09 REPLACEMENT OF EXISTING MAIL BOXES, CULVERTS, CLOTHES LINE POSTS, FENCES, IRRIGATION, ELECTRIC FENCES, AND OTHER SUCH FACILITIES

A. EXISTING MAIL BOXES, DRAINAGE CULVERTS, CLOTHES LINE POSTS, FENCES AND THE LIKE SHALL NOT BE DAMAGED OR DISTURBED UNLESS NECESSARY, IN WHICH CASE, THEY SHALL BE REPLACED IN AS GOOD CONDITION AS FOUND OR BETTER AS QUICKLY AS POSSIBLE. EXISTING MATERIALS SHALL BE REUSED IN REPLACING SUCH FACILITIES WHEN MATERIALS HAVE NOT BEEN DAMAGED BY THE CONTRACTOR'S OPERATIONS. EXISTING FACILITIES DAMAGED BY CONTRACTOR'S OPERATION SHALL BE REPLACED WITH NEW MATERIALS OF THE SAME TYPE AT THE CONTRACTOR'S EXPENSE. WORK IN THIS CATEGORY IS NOT A PAY ITEM.

B. REPLACEMENT OF PAVED DRAINAGE DITCHES WITHIN HIGHWAY RIGHT-OF-WAY SHALL BE ACCOMPLISHED IN ACCORDANCE WITH INDIANA DEPARTMENT OF TRANSPORTATION STANDARD SPECIFICATIONS.

3.10 CURB STOP ASSEMBLY

A. THE TRENCH AND TRENCH BOTTOM SHOULD BE CONSTRUCTED IN ACCORDANCE WITH ASTM D 2321 - SECTION 7. EMBEDMENT MATERIALS SHOULD BE CLASS I, CLASS II OR CLASS III MATERIALS AS DEFINED IN ASTM D 2321 - SECTION 6. THE USE OF CLASS IV AND/OR CLASS V MATERIALS FOR EMBEDMENT IS NOT RECOMMENDED AND SHOULD BE ALLOWED ONLY WITH THE APPROVAL OF THE ENGINEER. BEDDING OF THE PIPE SHOULD BE PERFORMED IN ACCORDANCE WITH ASTM D 2321 - SECTION 8. COMPACTION SHOULD BE AS SPECIFIED IN ASTM D 2321. DEVIATIONS FROM THE SPECIFIED COMPACTION SHALL BE APPROVED BY THE ENGINEER.

B. HAUNCHING AND INITIAL BACKFILL SHOULD BE AS SPECIFIED IN ASTM D 2321 - SECTION 9 USING CLASS I, CLASS II OR CLASS III MATERIALS. MATERIALS USED AND COMPACTION SHALL BE AS SPECIFIED BY THE ENGINEER. IN CASES WHERE A COMPACTION OF 85 PERCENT STANDARD PROCTOR DENSITY IS NOT ATTAINABLE, THE ENGINEER MAY WISH TO INCREASE THE SDR OF THE PIPE TO PROVIDE ADEQUATE STIFFNESS. ASTM D 2321 - SECTION 11.2, MINIMUM COVER FOR LOAD APPLICATION, SECTION 11.3, USE OF COMPACTION EQUIPMENT AND SECTION 11.4, REMOVAL OF TRENCH PROTECTION, SHOULD APPLY UNLESS DIRECTED OTHERWISE BY THE ENGINEER.

3.11 TESTING

A. ALL PRESSURE PIPING (LINES NOT LAID TO GRADE) SHALL BE GIVEN A HYDROSTATIC TEST TO THE RATED WORKING PRESSURE OF THE PIPE, UNDER WHICH LEAKAGE SHALL NOT EXCEED 10 GALLONS PER 24 HOURS PER INCH OF DIAMETER PER MILE OF PIPE. LOSS OF WATER PRESSURE DURING TEST SHALL NOT EXCEED 10 PSI IN A 24 HOUR PERIOD, 5PSI IN A 10 HOUR PERIOD OR, 0 PSI IN A 4 HOUR PERIOD. TESTING SHALL BE IN ACCORDANCE WITH AWWA STANDARD C605-94.

B. LEAKAGE IN PIPELINES, WHEN TESTED UNDER PRESSURE OF 50 PSI EXCESS OF NORMAL OPERATING PRESSURE, SHALL NOT EXCEED 10 GALLONS PER 24 HOURS PER INCH OF DIAMETER PER MILE OF PIPE.

C. CONTRACTOR SHALL FURNISH A RECORDING GAUGE AND WATER METER FOR MEASURING WATER USED DURING LEAKAGE TEST AND RECORDING PRESSURE CHARTS DURING DURATION OF TEST. RECORDING PRESSURE CHARTS SHALL BE TURNED OVER TO THE ENGINEER AT CONCLUSION OF TESTS. THE PRESSURE RECORDING DEVICE SHALL BE SUITABLE FOR OUTSIDE SERVICE, WITH A RANGE FROM 0_200 PSIG, 24_ HOUR SPRING WOUND CLOCK, DESIGNED FOR 9_INCH CHARTS, AND SHALL BE APPROVED BY THE ENGINEER. FOR CONTRACTOR'S INFORMATION ONLY, SUCH PRESSURE RECORDING DEVICES MAY BE AVAILABLE FROM THE FOXBORO COMPANY, FOXBORO, MASSACHUSETTS; BRISTOL DIVISION OF ACCO, WATERBURY, CONNECTICUT; OR WEKSLER INSTRUMENTS CORPORATION, FREEPORT, NEW YORK.

D. PIPELINES SHALL BE TESTED BEFORE BACKFILLING AT JOINTS EXCEPT WHERE OTHERWISE REQUIRED BY NECESSITY OR CONVENIENCE.

E. DURATION OF TEST SHALL BE NOT LESS THAN FOUR (4) HOURS WHERE JOINTS ARE EXPOSED AND NOT LESS THAN 24 HOURS WHERE JOINTS ARE COVERED.

F. WHERE LEAKS ARE VISIBLE AT EXPOSED JOINTS AND/OR EVIDENT ON THE SURFACE WHERE JOINTS ARE COVERED, THE JOINTS SHALL BE LAID AND LEAKAGE MUST BE MINIMIZED, REGARDLESS OF TOTAL LEAKAGE AS SHOWN BY TEST.

G. ALL PIPE, FITTINGS, VALVES, AND OTHER MATERIALS FOUND TO BE DEFECTIVE UNDER TEST SHALL BE REMOVED AND REPLACED AT NO ADDITIONAL EXPENSE TO THE OWNER.

H. LINES WHICH FAIL TO MEET TESTS SHALL BE REPAIRED AND RETESTED AS NECESSARY UNTIL TEST REQUIREMENTS ARE COMPLIED WITH.

I. WHERE NONMETALLIC JOINT COMPOUNDS ARE USED, PIPELINES SHOULD BE HELD UNDER NORMAL OPERATING PRESSURE FOR AT LEAST THREE DAYS BEFORE TESTING.

J. THE OWNER WILL PROVIDE INITIAL WATER FOR TESTING THE PRESSURE PIPING. SHOULD THE FIRST TEST FAIL TO PASS, ALL ADDITIONAL WATER REQUIRED FOR SUBSEQUENT TESTS SHALL BE FURNISHED AT THE CONTRACTOR'S EXPENSE.

K. THE COST OF TESTING OF PRESSURE PIPING IS INCIDENTAL AND IS TO BE INCLUDED IN THE CONTRACTOR'S UNIT CONTRACT PRICE.

3.12 TESTING OF HDPE PIPE

A. ALL NEW HDPE SANITARY SEWER FORCEMAINS SHALL BE HYDROSTATIC TESTED IN A TWO STEP PROCESS TO ENSURE WATER TIGHTNESS AND INTEGRITY. THE CONTRACTOR SHALL FURNISH A RECORDING GAUGE AND WATER METER FOR MEASURING WATER USED DURING LEAKAGE TEST AND RECORDING PRESSURE CHARTS DURING DURATION OF TEST. RECORDING PRESSURE CHARTS SHALL BE TURNED OVER TO THE ENGINEER AT CONCLUSION OF TEST. THE PRESSURE RECORDING DEVICE SHALL BE SUITABLE FOR OUTSIDE SERVICE, WITH A RANGE FROM 0-200 PSIG, 24-HOUR SPRING WOUND CLOCK, DESIGNED FOR 9" CHARTS, AND SHALL BE APPROVED BY THE ENGINEER. PRESSURE PIPE TEST SECTIONS SHALL NOT EXCEED 1,250 LINEAR FEET OF PIPE UNLESS APPROVED BY THE ENGINEER. THE PROCEDURE FOR TESTING SHALL BE APPROVED BY THE ENGINEER AND IN ACCORDANCE WITH THE FOLLOWING STEPS:

1. INITIAL EXPANSION

a. FILL THE TEST SECTION WITH WATER AND REMOVE ALL AIR FROM THE LINE AND SERVICE LATERALS.

b. PRESSURIZE THE TEST SECTION AT A STEAD RATE TO 1.5 THE RATED OPERATING PRESSURE OF THE PIPE. THE TEST PRESSURE SHOULD NOT EXCEED 1.5 TIMES THE RATED OPERATING PRESSURE OF THE PIPE OR THE LOWEST RATED COMPONENT IN THE SYSTEM. PRESSURE READINGS SHALL BE MEASURED AS CLOSE AS POSSIBLE TO THE LOWEST POINT OF THE LINE.

c. THE PIPE TEST SECTION SHALL BE ALLOWED TO STAND FOR 3 HOURS TO ALLOW FOR EXPANSION OF THE PIPE. MAKE-UP WATER SHOULD BE ADDED TO THE SYSTEM AT HOURLY INTERVALS TO RETURN THE TEST SECTION TO THE TEST PRESSURE.

d. AFTER EQUILIBRIUM IS ESTABLISHED WITHIN THE PIPE TEST SECTION, BEGIN THE FINAL HYDROSTATIC TEST.

2. TEST PHASE

a. AT THE END OF THE THIRD HOUR, MAKE-UP WATER SHOULD BE ADDED TO THE SYSTEM AND THE TEST SECTION IS PRESSURIZED TO 1.5 TIMES THE RATED OPERATING PRESSURE OF THE PIPE OR THE LOWEST RATED COMPONENT IN THE SYSTEM. THE FINAL TEST BEGINS WHEN THE PRESSURE PUMP SYSTEM IS TURNED OFF. THE FINAL TEST SHALL BE HELD FOR 2 HOURS.

b. DURING THE FINAL TEST PERIOD, A MEASURED AMOUNT OF MAKE-UP WATER SHOULD BE ADDED TO RETURN TO THE TEST PRESSURE AT HOURLY INTERVALS. THE AMOUNT OF MAKE-UP WATER SHALL NOT EXCEED THE ALLOWANCE GIVEN IN THE BELOW TABLE.

ALLOWANCE FOR EXPANSION OF HDPE PIPE*
(U.S. GALLONS/100 FEET OF PIPE)

c. IF THERE ARE NO VISUAL LEAKS OR SIGNIFICANT PRESSURE DROPS DURING THE FINAL TEST PERIOD, THE PIPELINE PASSES THE TEST. IF ANY DEFECTS OR LEAKS ARE REVEALED, THEY SHOULD BE RECTIFIED/CORRECTED AND THE PIPELINE RE-TESTED AFTER A 24-HOUR RECUPERATION PERIOD. UNDER NO CIRCUMSTANCES SHALL THE TOTAL TIME UNDER TEST EXCEED EIGHT (8) HOURS AT 1 ½ TIMES THE PRESSURE RATING.

AS AN ALTERNATIVE TO THE ABOVE TEST METHOD, THE FOLLOWING TEST METHOD MAY BE USED:

1. INITIAL EXPANSION

a. FILL THE TEST SECTION WITH WATER AND REMOVE ALL AIR FROM THE LINE AND SERVICE LATERALS.

b. PRESSURIZE THE TEST SECTION AT A STEAD RATE TO 1.5 THE RATED OPERATING PRESSURE OF THE PIPE. THE TEST PRESSURE SHOULD NOT EXCEED 1.5 TIMES THE RATED OPERATING PRESSURE OF THE PIPE OR THE LOWEST RATED COMPONENT IN THE SYSTEM. PRESSURE READINGS SHALL BE MEASURED AS CLOSE AS POSSIBLE TO THE LOWEST POINT OF THE LINE.

c. THE PIPE TEST SECTION SHALL BE ALLOWED TO STAND FOR 4 HOURS TO ALLOW FOR EXPANSION OF THE PIPE. MAKE-UP WATER SHOULD BE ADDED TO THE SYSTEM AT HOURLY INTERVALS TO RETURN THE TEST SECTION TO THE TEST PRESSURE.

d. AFTER EQUILIBRIUM IS ESTABLISHED WITHIN THE PIPE TEST SECTION, BEGIN THE FINAL HYDROSTATIC TEST.

2. TEST PHASE

a. AT THE END OF THE FOURTH HOUR, MAKE-UP WATER SHOULD BE ADDED TO THE SYSTEM TO RETURN THE TEST SECTION TO THE INITIAL EXPANSION PRESSURE.

b. THE EXPANSION PRESSURE HELD FOR THE FOUR HOURS IS THEN REDUCED BY 10 PSI AND HELD FOR ONE (1) HOUR. IF THE PRESSURE REMAINS STEADY (WITHIN 5% OF THE REDUCED PRESSURE) FOR AN HOUR, NO LEAKAGE IS INDICATED AND THE PIPELINE PASSES THE TEST.

c. IF ANY DEFECTS OR LEAKS ARE REVEALED, THEY SHOULD BE RECTIFIED/CORRECTED AND THE PIPELINE RE-TESTED AFTER A 24-HOUR RECUPERATION PERIOD. UNDER NO CIRCUMSTANCES SHALL THE TOTAL TIME UNDER TEST EXCEED EIGHT (8) HOURS AT 1 ½ TIMES THE PRESSURE RATING.

d. THE ENGINEER SHALL WITNESS ALL TESTS. ALL EQUIPMENT USED SHALL BE SPECIFICALLY DESIGNED FOR THE PURPOSE OF FORCEMAIN TESTING. IF A TEST FAILS, CORRECTIONS SHALL BE MADE AND THE LINE SHALL BE RETESTED UNTIL A SATISFACTORY TEST IS ACHIEVED. ALL PIPE, FITTINGS AND OTHER MATERIALS FOUND TO BE DEFECTIVE UNDER TESTING SHALL BE REMOVED AND REPLACED AT NO ADDITIONAL EXPENSE TO THE OWNER. NO FORCEMAIN SHALL BE PLACED INTO SERVICE OR ACCEPTED BY THE OWNER UNTIL IT HAS PASSED THE TESTING REQUIREMENT. ADDITIONAL INFORMATION CONCERNING THE ABOVE TESTING PROCEDURES FOR HYDROSTATIC TESTING OF HDPE PRESSURE PIPELINES IS AVAILABLE THROUGH THE PLASTICS PIPE INSTITUTE (PPI) TECHNICAL REPORT #31 (TR-31). IN ADDITION, ALL FIELD TESTING PROCEDURES SHALL BE APPROVED BY THE MANUFACTURE(S) OF THE PRODUCTS BEING TESTED.

3.13 CLEAN UP

A. UPON COMPLETION OF INSTALLATION OF THE PIPING AND APPURTENANCES, THE CONTRACTOR SHALL REMOVE ALL DEBRIS AND SURPLUS CONSTRUCTION MATERIALS RESULTING FROM THE WORK. THE CONTRACTOR SHALL GRADE THE GROUND ALONG EACH SIDE OF PIPE TRENCHES IN A UNIFORM AND NEAT MANNER LEAVING THE CONSTRUCTION AREA IN A SHAPE AS NEAR AS POSSIBLE TO THE ORIGINAL GROUND LINE.

END OF SECTION

811
Know what's below.
Call before you dig.
Within Indiana Call
811 or 800-382-5544
24 Hours a Day, 7 Days a Week.
PER INDIANA STATE LAW IC 8-1-26. IT IS AGAINST THE LAW TO EXCAVATE WITHOUT NOTIFYING THE UNDERGROUND LOCATION SERVICE TWO (2) WORKING DAYS BEFORE COMMENCING WORK.

PRELIMINARY CONSTRUCTION PLANS

10505 N. College Avenue
Indianapolis, Indiana 46280
weihe.net
317 | 846 - 6611
800 | 452 - 6408
317 | 843 - 0546 fax
ALLAN H. WEIHE, P.E., L.S. - FOUNDER

WEIHE ENGINEERS
Land Surveying | Civil Engineering
Landscape Architecture

PROJECT NO.: W12.0262
DWG NAME: 120262-C301 spec.dwg
DESIGNED BY: EAC/MG
DRAWN BY: EAC/MG
CHECKED BY: JKS
DATE: 06.29.2012

REVISIONS AND ISSUES	DATE	BY

JAMES K. SHINNEMAN REGISTERED NO. 10200392 STATE OF INDIANA PROFESSIONAL ENGINEER
APPROVAL PENDING NOT FOR CONSTRUCTION

JAMES K. SHINNEMAN P.E. 10200392

PREPARED FOR:
EPIPHANY EVANGELICAL LUTHERAN CHURCH PHASE ONE
156TH AND DITCH ROAD, WESTFIELD IN
SPECIFICATIONS
Part of the SE Corner of SW/1/4 of Section 10, Township 18 North, Range 3 East, Washington Township, Hamilton County, Indiana

SHEET NO.
C303
PROJECT NO.
W12.0262

LOCATION: H:\2012\w120262\Engineering\design\conset\120262-C301 spec.dwg
LAYOUT: C303 - SPECS
DATE/TIME: June 29, 2012 - 8:00am
PLOTTED BY: cartere

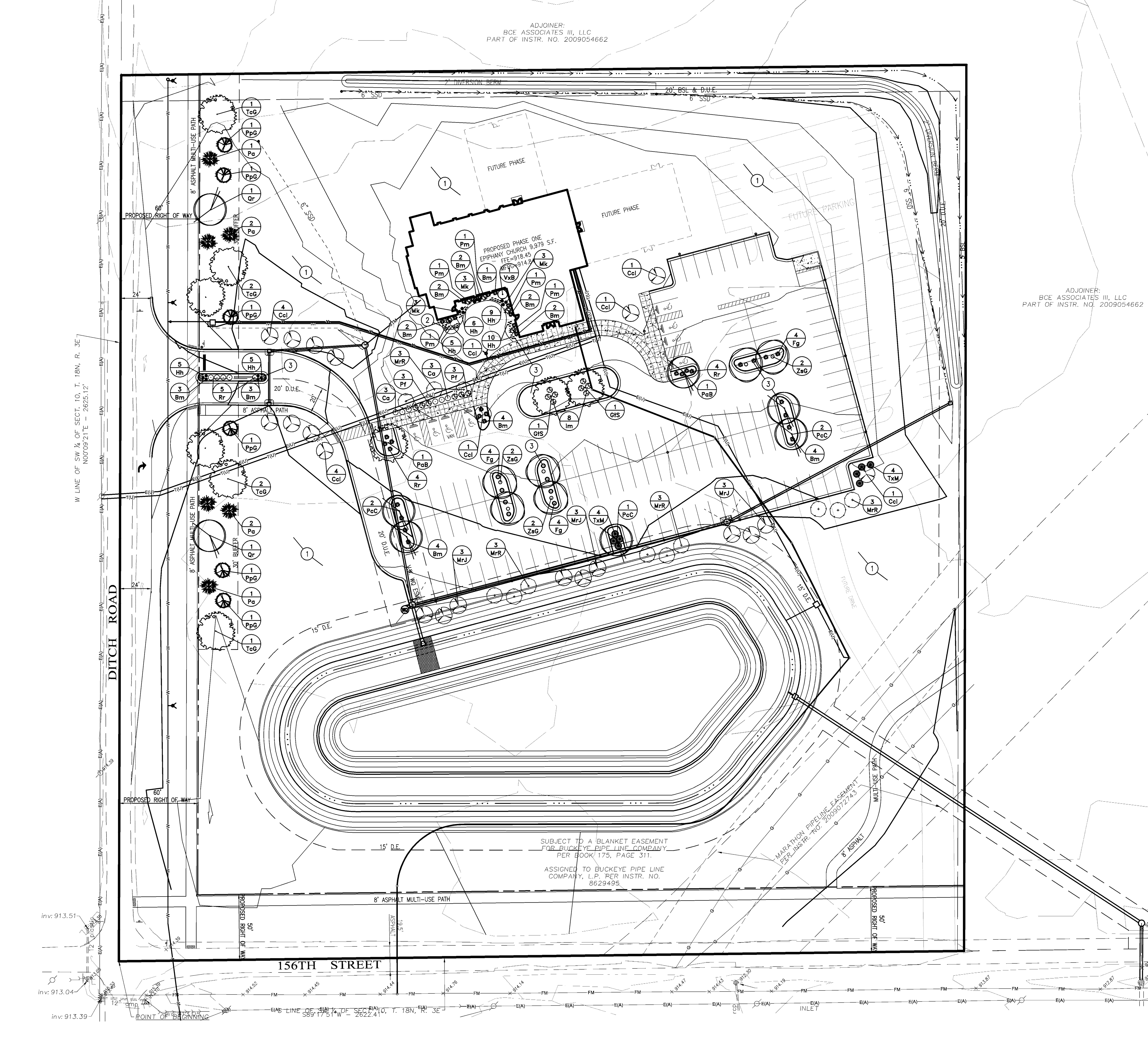

GENERAL NOTES

1. IN CASE OF DISCREPANCIES BETWEEN THE PLAN AND THE PLANT LIST, THE PLAN SHALL DICTATE. IF IN QUESTION, CONTACT THE LANDSCAPE DESIGNER.
2. ALL SHRUBS PLANTING AREAS TO BE COVERED WITH 4" THICK LAYER OF SHREDDED HARDWOOD BARK MULCH. ALL GROUND COVER BEDS SHALL BE COVERED WITH 1" SHREDDED HARDWOOD BARK MULCH. BARK MULCH SHALL BE APPROVED BY LANDSCAPE DESIGNER AND SHALL BE UNIFORM IN TEXTURE AND COLOR AND SHALL BE OBTAINED FROM SAWMILL OR LUMBERING OPERATIONS. NO UTILITY MULCH OR PROCESSED TREE TRIMMINGS WILL BE ALLOWED.
3. AN APPROVED PRE-EMERGENT HERBICIDE SHALL BE APPLIED IN ALL PLANTING AND GROUND COVER BEDS AT RATES SPECIFIED BY MANUFACTURER FOR EACH VARIETY OF PLANT.
4. FINAL PLACEMENT OF PLANT MATERIALS, ETC. SHALL BE APPROVED BY LANDSCAPE DESIGNER BEFORE PLANTING OPERATIONS ARE TO PROCEED. ALL TREE LOCATIONS SHALL BE MARKED WITH A WOODED STAKE INDICATING VARIETY AND SIZE OF TREE. ALL GROUND COVER AND MULCH BED LINES SHALL BE MARKED BY A HIGHLY VISIBLE PAINT LINE WITH OCCASIONAL WOOD STAKES FOR REFERENCE. ALL STAKES SHALL BE REMOVED FOLLOWING PLANTINGS OPERATIONS. LANDSCAPE DESIGNER RESERVES THE RIGHT TO ADJUST PLANT LOCATIONS ON SITE.
5. NO SUBSTITUTIONS OF PLANT MATERIAL WILL BE ALLOWED. IF PLANTS ARE SHOWN TO BE UNAVAILABLE, THE CONTRACTOR SHALL NOTIFY LANDSCAPE DESIGNER PRIOR TO BID DATE IN WRITING. ALL PLANTS SHALL BE INSPECTED AND TAGGED WITH PROJECT IDENTIFICATION AT NURSERY OR CONTRACTORS OPERATION PRIOR TO MOVING TO JOB SITE. PLANTS MAY ALSO BE INSPECTED AND APPROVED OR REJECTED ON THE JOB SITE.
6. ALL PLANTS ARE TO MEET OR EXCEED AMERICAN STANDARDS FOR NURSERY STOCK, 1986 EDITION, AS SET FORTH BY AMERICAN ASSOCIATION OF NURSERYMEN.
7. PLANTS AND ALL OTHER MATERIALS TO BE STORED ON SITE WILL BE PLACED WHERE THEY WILL NOT CONFLICT WITH CONSTRUCTION OPERATIONS AND AS DIRECTED BY OWNER.
8. ALL NEW LANDSCAPE PLANTINGS SHALL BE GUARANTEED FOR A PERIOD OF ONE YEAR FOLLOWING FINAL INSPECTION BY LANDSCAPE DESIGNER. AT THE END OF THIS PERIOD, PLANT MATERIAL TERMED DEAD OR UNSATISFACTORY BY LANDSCAPE DESIGNER SHALL BE REPLACED AT NO ADDITIONAL CHARGE BY THE LANDSCAPE CONTRACTOR.
9. THE LANDSCAPE CONTRACTOR SHALL OBTAIN AND PAY FOR ALL PERMITS AND FEES THAT MAY BE REQUIRED FOR HIS PORTION OF WORK.
10. PEAT MOSS TO BE USED ON PROJECT SHALL BE A DOMESTIC OR IMPORTED MATERIAL, CHOCOLATE BROWN IN COLOR AND COMPOSED OF PARTIALLY DECOMPOSED VEGETABLE MATERIAL. PEAT MOSS TO ALSO BE MILDLY ACIDIC IN CHARACTER AND SHALL MEET APPROVAL OF LANDSCAPE DESIGNER.
11. LANDSCAPE CONTRACTOR SHALL NOTIFY LANDSCAPE DESIGNER IN WRITING PRIOR TO BID DATE OF ANY PLANTS THAT HE FEELS MAY NOT SURVIVE IN LOCATIONS NOTED.
12. ALL LANDSCAPING PLANTINGS TO BE MAINTAINED FOR 1 YEAR FOLLOWING TURNOVER. MAINTENANCE TO INCLUDE WATERING, WEEDING, CULTIVATION, MULCHING, MOWING AND ALL OTHER NECESSARY OPERATIONS REQUIRED FOR PROPER ESTABLISHMENT OF PLANTINGS. NOTE: AT END OF MAINTENANCE PERIOD, CONTRACTOR TO REMOVE GUYING AND STAKING FROM TREES.
13. CONTRACTOR TO SUBMIT UNIT PRICES ON EVERY TYPE OF WORK AS REQUESTED BY LANDSCAPE DESIGNER.
14. BACKFILL FOR TREE AND SHRUB PLANTING SHALL BE 75% APPROVED TOPSOIL AND 25% APPROVED PEAT MOSS. TOP LAYER OF BACKFILL SHALL BE 100% EXISTING TOPSOIL. A 5-10-5 ANALYSIS SLOW RELEASE FERTILIZER SHALL BE INCORPORATED INTO BACKFILL AT APPROVED RATES.
15. PROVIDE MINIMUM 4" PLANTING SOIL IN ALL GROUND COVER AND FLOWER AREAS WITH MIXTURE COMPRISING OF ONE PART COMMERCIAL GRADE 'POTTING SOIL,' 5 PARTS TOPSOIL AND 4 PARTS PEAT MOSS. A FULL 4" LAYER OF APPROVED SHREDDED FIBROUS PEAT MOSS MAY BE USED IN LIEU OF PLANTING MIX.
16. PLANTS SHALL BEAR A TAG SHOWING GENUS, SPECIES AND VARIETY.
17. PLANTS SHALL BE CERTIFIED BY THE STATE OF INDIANA DEPARTMENT OF NATURAL RESOURCES AND FREE FROM DISEASE OR HAZARDOUS INSECTS.
18. ALL SUBSTITUTIONS MUST BE REVIEWED AND APPROVED BY THE LANDSCAPE ARCHITECT TO ENSURE COMPLIANCE WITH THE ORDINANCE REQUIREMENTS.

LANDSCAPE RECOMMENDATIONS

REQUIREMENT:	PROVIDED:
BUFFERYARD REQUIREMENTS SECTION 4.3.B.IV PUD 11-33 156TH STREET: NONE REQUIRED ALONG THE GAS MAIN AND POND. DITCH ROAD: NONE REQUIRED ALONG THE POND. : 30' TYPE B BUFFER (1 SHADE TREE PER 30' W/ 50% EVERGREEN).	 N/A N/A YES
ROAD FRONTAGE SECTION 4.3.A PUD 11-33 156TH STREET: NONE REQUIRED ALONG THE GAS MAIN AND POND. DITCH ROAD: NONE REQUIRED ALONG THE POND.	 N/A N/A
ONSITE STANDARDS (10+/- ACRE SITE) WC16.06.050.A SHADE TREES: 2 PER ACRE REQUIRED. (20 REQUIRED) ORNAMENTAL TREES: 3 PER ACRE REQUIRED. (30 REQUIRED) SHRUBS: 10 PER ACRE REQUIRED. (100 REQUIRED)	 YES YES YES
ROAD FRONTAGE STANDARDS WC16.06.050.B 156TH STREET: NONE REQUIRED ALONG THE GAS MAIN AND POND. DITCH ROAD: APPROXIMATELY 410 LINEAR FEET.	 N/A YES
INTERIOR PARKING AREA LANDSCAPING WC16.06.070.A 10% VEHICLE USE AREA: 1 TREE & 4 SHRUBS PER ISLAND WITH 100% GROUNDCOVER.	 YES

PLANT SCHEDULE

PLAN KEY	BOTANICAL NAME	COMMON NAME	SIZE	QUANTITY	ROOT CONDITION B & B	BARE	CONT	ON CENTER SPACING	SPECIAL INSTRUCTIONS
	CANOPY DECIDUOUS TREES								
GtS	GLEDITSIA TRIACANTHOS 'INERMIS'	SKYLINE HONEYCLOCUST	2"	2	X			SEE PLAN	
PaB	PLATANUS X ACERFOLIA 'BLOODGOOD'	BLOODGOOD LONDON PLANETREE	2"	2	X			SEE PLAN	
PcC	PYRUS CALLERYANA 'CLEVELAND SELECT'	NEW BRADFORD FLOWERING PEAR	2"	5	X			SEE PLAN	
Qr	QUERCUS RUBRA	RED OAK	2"	2	X			SEE PLAN	
TcG	TILIA CORDATA 'GREENSPIRE'	GREENSPIRE LINDEN	2"	6	X			SEE PLAN	
ZsG	ZELKOVA SERRATA 'GREENVASE'	GREENVASE ZELKOVA	2"	6	X			SEE PLAN	
	ORNAMENTAL TREES								
Ccl	CRATAEGUS CRUSGALLI 'INERMIS'	THORNLESS COCKSPUR HONEYLOCUST	2"	13	X			SEE PLAN	
MrJ	MALUS 'RED JEWEL'	'RED JEWEL' CRABAPPLE	2"	9	X			SEE PLAN	
MmR	MALUS 'ROYAL RAINDROPS'	'ROYAL RAINDROPS' CRABAPPLE	2"	12	X			SEE PLAN	
	EVERGREEN TREES								
Pa	PICEA ABIES	NORWAY SPRUCE	6'	6	X			SEE PLAN	
PpG	PICEA PUNGENS 'GLAUCA'	COLORADO BLUE SPRUCE	6'	6	X			SEE PLAN	
	DECIDUOUS SHRUBS								
Ca	COTONEASTER APICULATUM	CRANBERRY COTONEASTER	#5	6			X	SEE PLAN	
Pf	POTENTILLA FRUTICOSA 'GOLDFINGER'	GOLDFINGER POTENTILLA	#2	6			X	SEE PLAN	
Rr	ROSA 'RADRAZZ'	KNOCK OUT ROSE	#2	13			X	SEE PLAN	
VxB	VIBURNUM X BURKWOODII	BURKWOOD VIBURNUM	#2	1			X	SEE PLAN	
	EVERGREEN SHRUBS								
Bm	BUXUS MICROPHYLLA	LITTLELEAF BOXWOOD	#5	24			X	36" O.C.	
Fg	FOTHERGILLA GARDENII	DWARF FOTHERGILLA	#5	12			X	36" O.C.	
Im	ILEX X MESERVEAE 'BLUE PRINCE'	BLUE PRINCE HOLLY	#3	8			X	36" O.C.	
Pm	PINUS MUGHO	MUGHO PINE	#5	5			X	36" O.C.	
TxM	TAXUS X MEDIA 'DENSIFORMIS'	DENSIFORMIS YEW	#5	8			X	36" O.C.	
	ORNAMENTAL GRASSES								
Hh	HEMEROCALLIS 'PARDON ME'	PARDON ME RED DAYLILLY	#1	40			X	24" O.C.	
Mk	MISCANTHUS SINENSIS 'KLEINE FONTAINE'	LITTLE FOUNTAIN DWARF SILVER GRASS	#3	9			X	36" O.C.	

LANDSCAPE PLAN NOTES:

(1) SOD OR SEED ALL AREAS. ALL SOD SHALL BE CERTIFIED GRADE CULTIVATED GRASS SOD: OF "ADVENTURE BLEND" TURF TYPE TALL FESCUE (BY GENERAL CONTRACTOR)

(2) LANDSCAPE BED EDGE (TYP)

(3) MULCH

NOTE:

ANY EXISTING TREE(S) THAT MAY REQUIRE REMOVAL BUT ARE NOT SHOWN ON THE PLAN AS BEING REMOVED MAY BE DONE SO, AS LONG AS THE TREE(S) ARE RELOCATED TO AN APPROVED ALTERNATIVE LOCATION ON SITE.

SCALE: 1" = 40'

0 20 40 80

811

Know what's below. Call before you dig.

Within Indiana Call 811 or 800-382-5544
24 Hours a Day, 7 Days a Week.

PER INDIANA STATE LAW IC 8-1-26. IT IS AGAINST THE LAW TO EXCAVATE WITHOUT NOTIFYING THE UNDERGROUND LOCATION SERVICE TWO (2) WORKING DAYS BEFORE COMMENCING WORK.

PRELIMINARY CONSTRUCTION PLANS

10505 N. College Avenue
Indianapolis, Indiana 46280
weihe.net
317 | 846 - 6611
800 | 452 - 6408
317 | 843 - 0546 fax
ALLAN H. WEIHE, P.E., L.S. - FOUNDER
WEIHE ENGINEERS
Land Surveying | Civil Engineering
Landscape Architecture

PROJECT NO.: W12.0262
DWG NAME: 120262-l101.dwg
DESIGNED BY: EAC/MG
DRAWN BY: EAC/MG
CHECKED BY: JKS
DATE: 06.29.2012

REVISIONS AND ISSUES | DATE | BY

ERIC A. CARTER, REGISTERED LANDSCAPE ARCHITECT, No. 20300131, STATE OF INDIANA — NOT FOR CONSTRUCTION, PENDING APPROVAL

ERICA A. CARTER, R.L.A. 20300131

PREPARED FOR:

EPIPHANY EVANGELICAL LUTHERAN CHURCH PHASE ONE

156TH AND DITCH ROAD, WESTFIELD IN

LANDSCAPE PLAN

Part of the SE Corner of SW/1/4 of Section 10, Township 18 North, Range 3 East, Washington Township, Hamilton County, Indiana

SHEET NO. L101

PROJECT NO. W12.0262

LOCATION: H:\2012\w120262\Engineering\design\conset\120262-l101.dwg
LAYOUT: L101 - LANDSCAPE PLAN
DATE/TIME: June 29, 2012 - 8:01am
PLOTTED BY: cartere

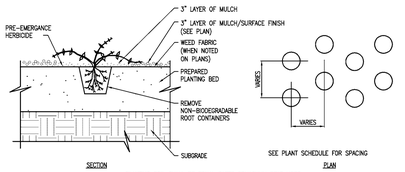

PLANTING SOIL SHALL BE EQUAL PARTS SPHAGNUM PEAT MOSS, COMPOSTED MANURE, AND EXISTING SOIL, TAMPED FIRMLY.

GROUNDCOVER PLANTING

(NO SCALE)

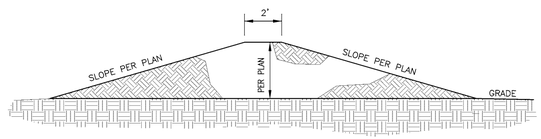

LANDSCAPE MOUNDING DETAIL

(NO SCALE)

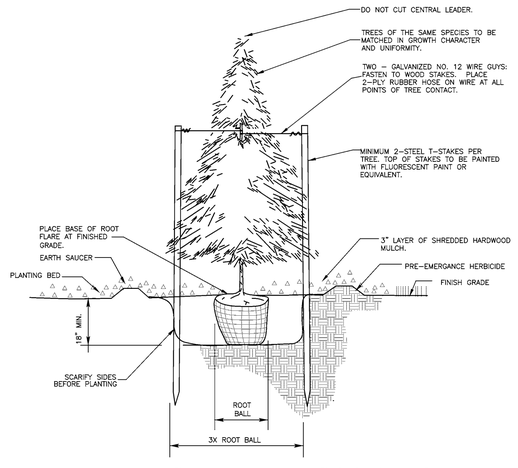

EVERGREEN PLANTING & STAKING

(NO SCALE)

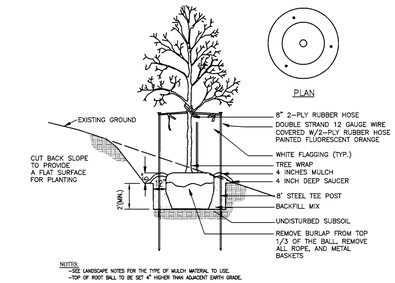

TREE PLANTING ON SLOPE

(NO SCALE)

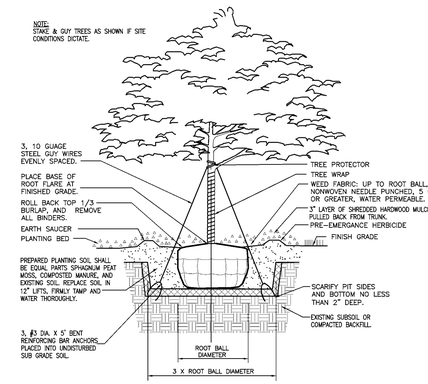

SHADE TREE PLANTING DETAIL

(NO SCALE)

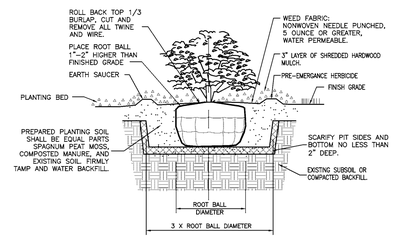

SHRUB & SMALL TREE PLANTING DETAIL

(NO SCALE)

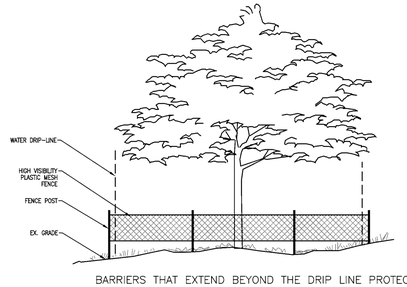

NOTE: AVOIDING DAMAGE DURING CONSTRUCTION

THE SUREST WAY TO PROTECT TREES THAT ARE TO BE SAVED IS TO:

(1) WORK WITH THE BUILDER TO LOCATE AND MARK WITH FLAGGING AND/OR SIGNS ALL CONSTRUCTION ROADS, PARKING PLACES FOR WORKERS, AND AREAS FOR STORAGE OF BUILDING MATERIALS, GRAVEL AND SOIL.

(2) WORK WITH THE UTILITY CONTRACTORS TO STAKE OUT THE EXACT LOCATION OF TRENCHES, AND

(3) ERECT PHYSICAL BARRIERS AROUND ALL "SAVED" TREES OR, BETTER YET, AROUND GROUPS OF TREES, NEAR THE CONSTRUCTION ACTIVITY.

(4) EXTEND BARRIERS AS FAR AS POSSIBLE BEYOND DRIPLINE.

BARRIERS THAT EXTEND BEYOND THE DRIP LINE PROTECT TREES DURING CONSTRUCTION.

TREE PRESERVATION DETAIL

(NO SCALE)

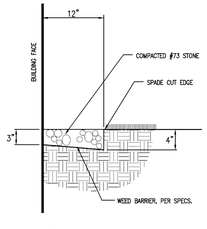

NOTE:
GRAVEL MOW STRIP IS NOT REQUIRED WHERE PLANTING BEDS OR CONCRETE FLATWORK IS DIRECTLY ADJACENT TO BUILDING.

GRAVEL MOWING STRIP

(NO SCALE)

811 Know what's below. Call before you dig.
Within Indiana Call 811 or 800-382-5544
24 Hours a Day, 7 Days a Week.
PER INDIANA STATE LAW IC 8-1-26, IT IS AGAINST THE LAW TO EXCAVATE WITHOUT NOTIFYING THE UNDERGROUND LOCATION SERVICE TWO (2) WORKING DAYS BEFORE COMMENCING WORK.

PRELIMINARY CONSTRUCTION PLANS

WEIHE ENGINEERS
Land Surveying | Civil Engineering
Landscape Architecture
10505 N. College Avenue
Indianapolis, Indiana 46280
weihe.net
317 | 846 - 6611
800 | 452 - 6408
317 | 843 - 0546 fax
ALLAN H. WEIHE, P.E., L.S. - FOUNDER

	BY	DATE
REVISIONS AND ISSUES		

PROJECT NO. W12.0262
DWG NAME: 120262-1101.dwg
DESIGNED BY: EAC/MG
DRAWN BY: EAC/MG
CHECKED BY: JKS
DATE: 06/29/2012

ERIC A. CRIDER, REGISTERED LANDSCAPE ARCHITECT, No. LA20300731, STATE OF INDIANA, NOTARIAL SEAL

JAMERICKA SHANTEMANLEY 800108896

PREPARED FOR:
EPIPHANY EVANGELICAL LUTHERAN CHURCH PHASE ONE
156TH AND DITCH ROAD, WESTFIELD IN

LANDSCAPE DETAILS
Part of the SE Corner of SW1/4 of Section 10, Township 18 North, Range 3 East, Washington Township, Hamilton County, Indiana

SHEET NO.
L201

PROJECT NO.
W12.0262

LOCATION: I:\2012\w12026X\Engineering\design\current\120262-1101.dwg
LAYOUT: 20" ARCH D - Plot
DATE/TIME: June 29, 2012 - 8:02am
PLOTTED BY: cotere

Statistics

Description	Symbol	Avg.	Max.	Min.	Max./Min.	Avg./Min.
Entire Site	+	0.3 fc	2.9 fc	0.0 fc	N/A	N/A
Parking Area	+	1.4 fc	2.8 fc	0.2 fc	14.0:1	7.0:1
Property Line	+	0.0 fc	0.1 fc	0.0 fc	N/A	N/A

Notes:
1. Calculations taken at grade.
2. 10' calculation point spacing.
3. 20' pole with 3' concrete base.

Light Fixture Schedule

Type	Manufacturer	Model No.	No. Lamps	Lamp Type	Voltage	Mounting	Description	Illustration **
'S1'	Lithonia	MRP-150MHC-SR3-208-SCWA *Contractor Price: $1,800.00 Each (luminaire & pole)*	1	150W. Ceramic M.H. (Pulse Start)	208	Pole	Post-top exterior HID area lighter with die-cast aluminum housing. MIRO finish, segmented reflector optical system. Segmented type III asymmetric distribution. 20' straight round aluminum pole. UL listed for wet locations. Color selection by Architect.	
'S2'	Lithonia	MRP-150MHC-SR4SC-208-SCWA *Contractor Price: $1,850.00 Each (luminaire & pole)*	1	150W. Ceramic M.H. (Pulse Start)	208	Pole	Post-top exterior HID area lighter with die-cast aluminum housing. MIRO finish, segmented reflector optical system. Segmented type IV forward throw, sharp cutoff distribution. 20' straight round aluminum pole. UL listed for wet locations. Color selection by Architect.	
'S3'	Lithonia	MRP-150MHC-SR5S-208-SCWA *Contractor Price: $1,850.00 Each (luminaire & pole)*	1	150W. Ceramic M.H. (Pulse Start)	208	Pole	Post-top exterior HID area lighter with die-cast aluminum housing. MIRO finish, segmented reflector optical system. Segmented type V symmetric distribution. 20' straight round aluminum pole. UL listed for wet locations. Color selection by Architect.	

*** = Pictures shown as a visual aid only and may not depict specific attributes listed in this schedule.*

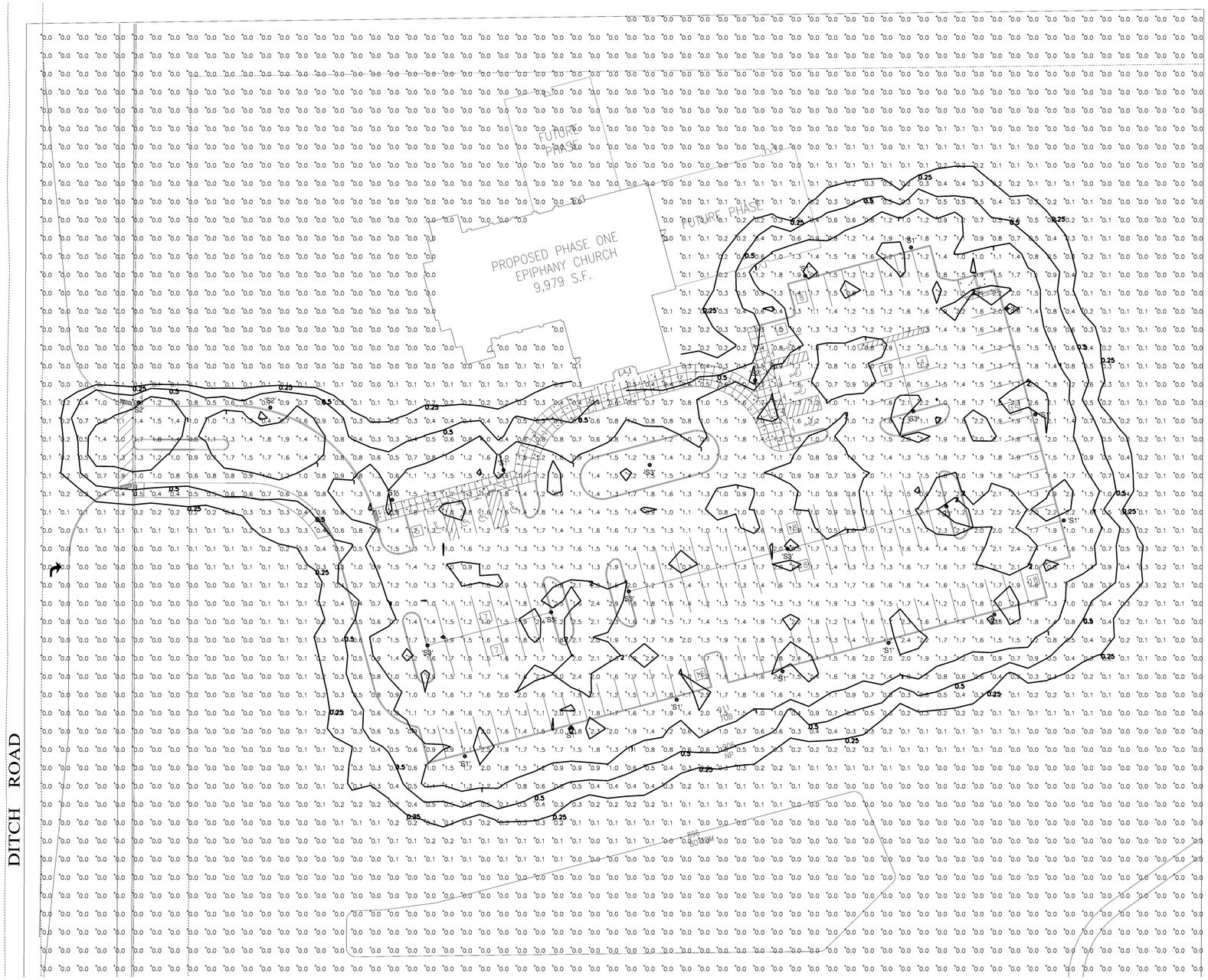

NORTH

SITE LIGHTING PHOTOMETRIC PLAN

SCALE: 1" = 30'-0"

© 2012 Halstead Architects All Rights Reserved

JOHN OBERLIES CONSULTING ENGINEERS INC.
Mechanical • Electrical • Plumbing

HALSTEADarchitects
1129 SHELBY STREET
INDIANAPOLIS, INDIANA 46203.1935 USA
TEL.317.784.1431 FAX.317.784.1433
NET WWW.HALSTEAD-ARCHITECTS.COM

CERTIFIED BY:

PRELIMINARY NOT FOR CONSTRUCTION

EPIPHANY EVANGELICAL LUTHERAN CHURCH
156TH STREET AND DITCH ROAD
WESTFIELD, INDIANA

DRAWING
SITE LIGHTING PHOTOMETRIC PLAN

ISSUE
TAC Submission - 06/29/12

REVISIONS
1
2 ---
3 ---
4 ---

PROJECT NO.
1209

DATE
06/29/2012

DRAWING NO.
E0.1