SITE CONSTRUCTION PLANS FOR
EPIPHANY EVANGELICAL LUTHERAN CHURCH PHASE ONE

SEC10, T18 N, R3E
15606 Ditch Rd
WESTFIELD, IN 46074

PLANS PREPARED FOR:

HALSTEAD ARCHITECTS
1139 SHELBY STREET
INDIANAPOLIS, IN 46203
TELEPHONE: (317) 684-1431
FAX: (317) 684-1433
CONTACT PERSON: MICHAEL HALSTEAD

PLANS PREPARED BY:

WEIHE ENGINEERS, INC.
10505 N. COLLEGE AVE.
INDIANAPOLIS, INDIANA 46280
TELEPHONE: (317) 846-6611
FAX: (317) 843-0546
CONTACT PERSON: JAMIE SHINNEMAN
EMAIL: SHINNEMANJ@WEIHE.NET

GENERAL NOTES

1) THE CONTRACTOR SHALL BE RESPONSIBLE FOR OBTAINING, OR VERIFYING THAT ALL PERMITS AND APPROVALS ARE OBTAINED FROM THE RESPECTIVE CITY, COUNTY, AND STATE AGENCIES PRIOR TO STARTING CONSTRUCTION.

2) IT SHALL BE THE CONTRACTORS RESPONSIBILITY TO DETERMINE THE EXACT LOCATION OF ALL EXISTING UTILITIES IN THE VICINITY OF THE CONSTRUCTION AREA PRIOR TO STARTING CONSTRUCTION.

3) IT SHALL BE THE CONTRACTORS RESPONSIBILITY TO NOTIFY AND COORDINATE CONSTRUCTION WITH ALL RESPECTIVE UTILITIES.

4) ALL QUANTITIES GIVEN ON THESE PRINTS, VERBALLY OR IN THE SCOPE OF WORK SECTION ARE ESTIMATES AND SHALL BE CONFIRMED BY THE BIDDING CONTRACTORS.

5) OCCUPATIONAL SAFETY AND HEALTH ADMINISTRATION (OSHA) STANDARDS FOR EXCAVATIONS; FINAL RULE 29 CFR PART 1926, SUBPART "P" APPLIES TO ALL EXCAVATIONS EXCEEDING FIVE (5) FEET IN DEPTH.

6) IN ADDITION, EXCAVATION EXCEEDING TWENTY (20) FEET IN DEPTH REQUIRE THE DESIGN OF A TRENCH SAFETY SYSTEM BY A REGISTERED PROFESSIONAL ENGINEER.

7) IT SHALL BE THE RESPONSIBILITY OF THE DEVELOPER AND CONTRACTOR TO MAINTAIN QUALITY CONTROL THROUGHOUT THIS PROJECT.

8) TEMPORARY TRAFFIC CONTROL DURING CONSTRUCTION TO CONFORM TO APPLICABLE LOCAL STANDARDS.

9) THE ENGINEER AND/OR OWNER DISCLAIM ANY ROLE IN THE CONSTRUCTION MEANS AND METHODS ASSOCIATED WITH THE PROJECT AS SET FORTH IN THESE PLANS.

10) ANY FIELD TILES ENCOUNTERED DURING EXCAVATION SHALL BE REPAIRED AND CONNECTED TO NEW STORM SEWERS AND POSITIVE DRAINAGE PRESERVED.

12) THE SITE DOES NOT LIE IN A SPECIAL FLOOD HAZARD AREA AS ESTABLISHED BY THE FEDERAL EMERGENCY MANAGEMENT AGENCY – NATIONAL FLOOD INSURANCE PROGRAM, WHEN PLOTTED BY SCALE ON FLOOD INSURANCE RATE MAP #18057C0120F, DATED FEB 19, 2003.

13) BEARINGS, DIMENSIONS AND EASEMENTS ARE SHOWN FOR REFERENCE ONLY. SEE RECORD SURVEYS & PLAT FOR EXACT INFORMATION.

14) THE SITE DOES NOT CONTAIN A WETLANDS AS ESTABLISHED BY THE U.S. DEPARTMENT OF THE INTERIOR FISH AND WILDLIFE SERVICE; WESTFIELD, INDIANA, NATIONAL WETLANDS INVENTORY MAP DATED 1989.

15) ALL PAVING WITHIN THE EXISTING AND PROPOSED CITY RIGHT OF WAY SHALL CONFORM TO THE REQUIREMENTS OF THE DEPARTMENT OF ENGINEERING. CONTRACTOR SHALL CONTACT THE DEPARTMENT OF ENGINEERING TO SCHEDULE A PRE–CONSTRUCTION MEETING TO REVIEW THE DEPARTMENT'S CONSTRUCTION REQUIREMENTS, STAFF NOTIFICATION REQUIREMENTS REQUIRED INSPECTIONS FOR CERTAIN STAGES OF THE WORK AND TO REVIEW THE AUTHORITY OF THE DEPARTMENT AS IT RELATES TO WORK WITHIN THE EXISTING AND PROPOSED CITY RIGHT OF WAY.

16.) IF IT WILL BE NECESSARY TO RELOCATE EXISTING UTILITIES, THE EXPENSE OF SUCH RELOCATION SHALL BE THE RESPONSIBILITY OF THE DEVELOPER. ALL UTILITY POLES SHALL BE LOCATED WITHIN ONE FOOT OF THE PROPOSED RIGHT–OF–WAY.

OPERATING AUTHORITIES:

CITY OF WESTFIELD
COMMUNITY DEVELOPMENT
ATTENTION: KEVIN TODD
2728 EAST 171ST STREET
WESTFIELD, IN 46074
317–804–3172

HAMILTON COUNTY HEALTH DEPT.
ATTENTION: LARRY BEARD
18030 FOUNDATION DRIVE, SUITE A
NOBLESVILLE, IN 46060–2229
317–776–8500

HAMILTON COUNTY HIGHWAY DEPT.
ATTENTION: DAVE LUCAS
1700 SOUTH 10TH STREET
NOBLESVILLE, IN 46060
317–773–7770

FRONTIER
ATTENTION: STEVE COSTLOW
20905 HAGUE ROAD
NOBLESVILLE, IN 46062
317–984–9010

COMCAST CABLE
ATTENTION: MATT STRINGER
9750 EAST 150TH STREET, STE 1600
NOBLESVILLE, IN 46060
317–774–3384

WESTFIELD DEPT. OF PUBLIC WORKS
ATTENTION: KURT WANNINGER
2706 EAST 171ST STREET
WESTFIELD, IN 46074
317–804–3100

BRIGHTHOUSE NETWORKS
ATTENTION: JASON KIRKMAN
3030 ROOSEVELT AVENUE
INDIANAPOLIS, IN 46218
317–632–9077

AT&T
ATTENTION: STEVE ROBINSON
5858 NORTH COLLEGE AVENUE
INDIANAPOLIS, IN 46220
317–265–6801

TIME WARNER TELECOM
ATTENTION: TANNY TRIPLITT
4625 WEST 86TH STREET, STE 500
INDIANAPOLIS, IN 46268
317–713–8947

VECTREN (GAS)
ATTENTION: CHARLES SHUPPERD
16000 ALLISONVILLE ROAD
NOBLESVILLE, IN 46060
317–776–5535

WESTFIELD FIRE DEPARTMENT
ATTENTION: GARRY HARLING
17535 DARTOWN ROAD
WESTFIELD IN 46074
317–896–2704

HAMILTON COUNTY SURVEYOR'S OFFICE
ATTENTION: GREG HOYES
1 HAMILTON COUNTY SQUARE, STE. 146
NOBLESVILLE, IN 46060
317–776–9626

DUKE ENERGY (ELECTRIC)
ATTENTION: JASON KEENAN
100 SOUTH MILL CREEK ROAD
NOBLESVILLE, IN 46060
317–776–5335

BUCKEYE
ATTENTION: MARTY WHITE
940 BUCKEYE ROAD
LIMA, OH 45804
419–993–8008

MARATHON PETROLEUM LLC
ATTENTION: TERRY THOMPSON
5000 WEST 86TH STREET
INDIANAPOLIS, IN 46268
317–872–3200 X2008

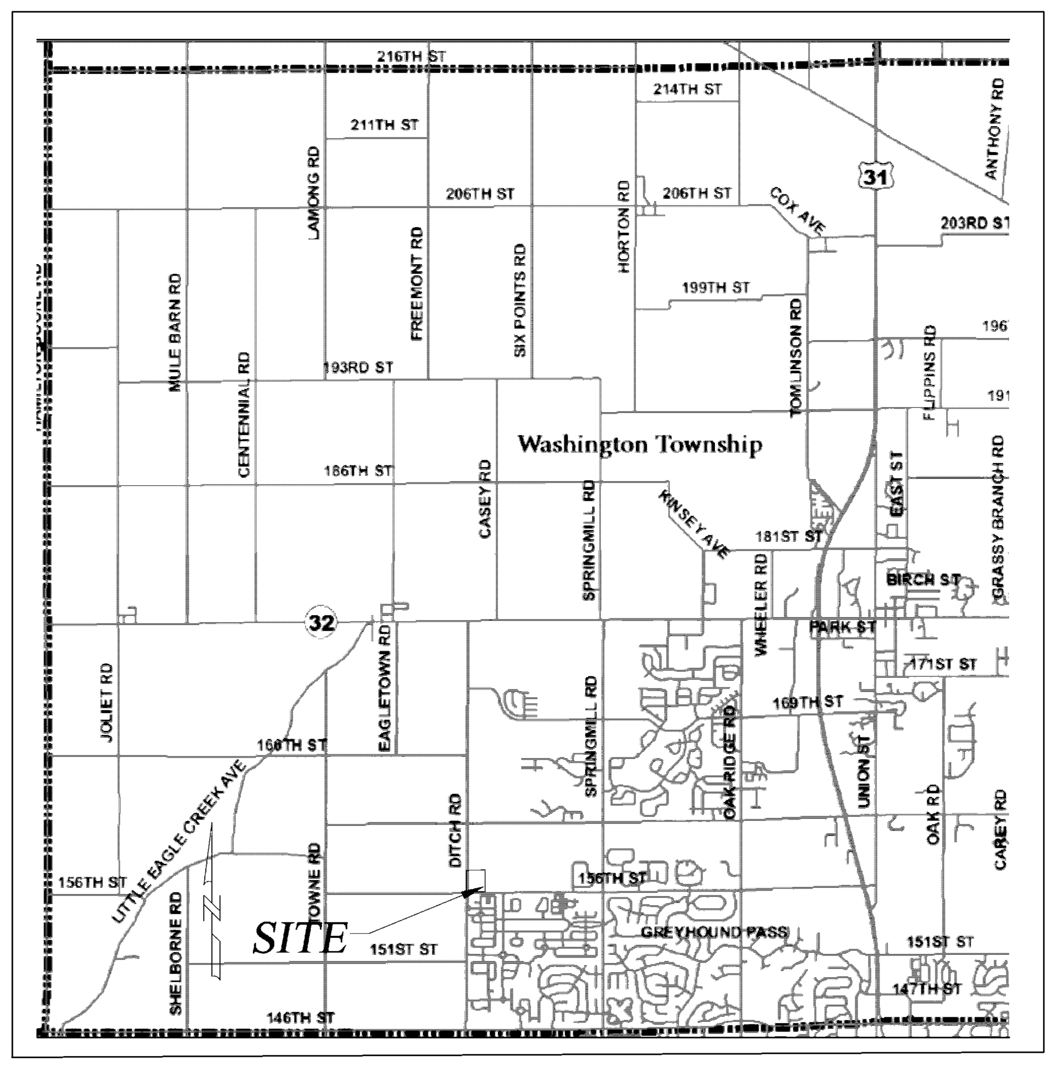

LOCATION MAP

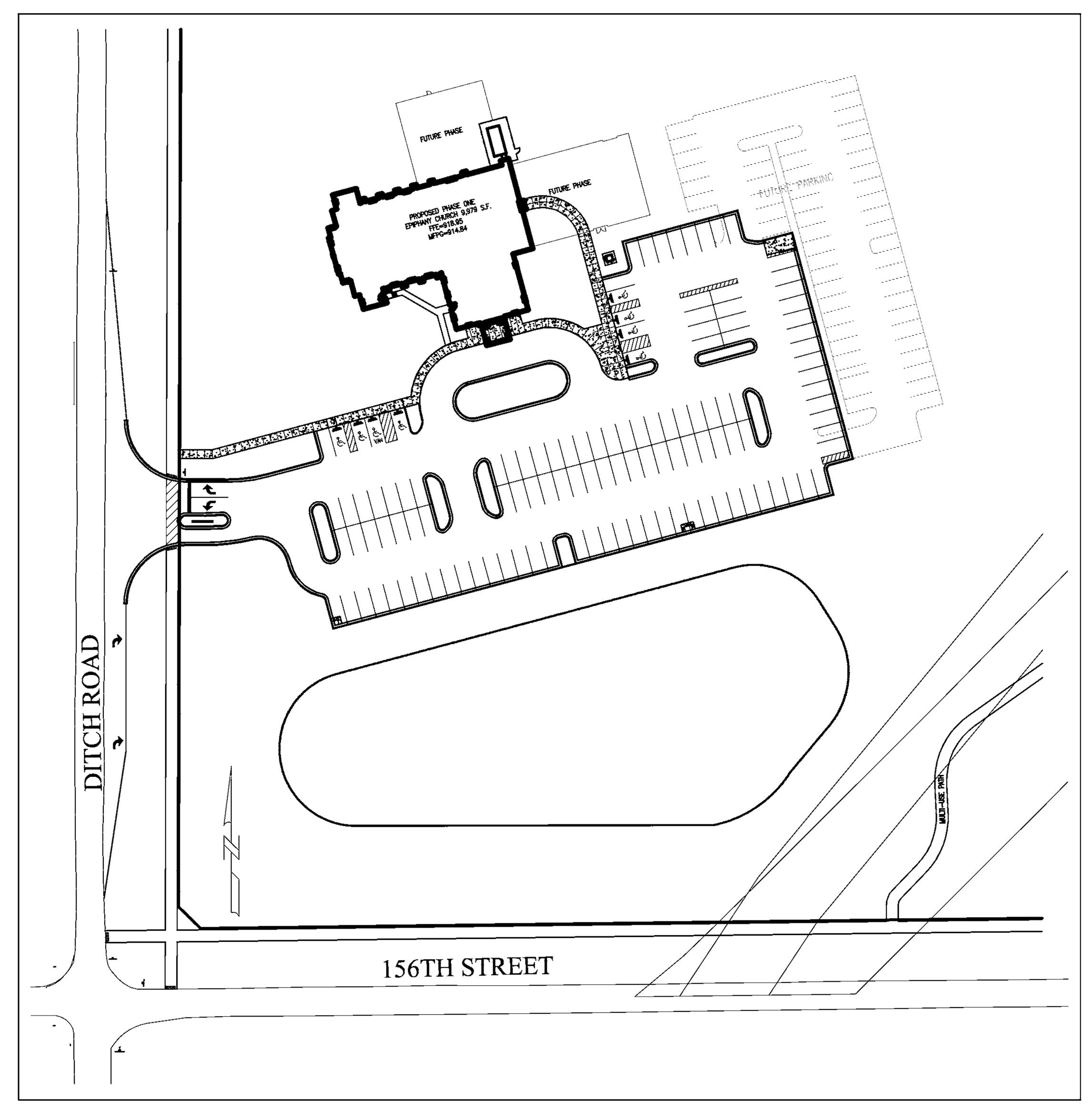

SITE LAYOUT MAP

SHEET INDEX

SHEET NO.	DESCRIPTION
C001	TITLE SHEET
A2.1,A5.1,A5.2	ARCHITECTURAL FLOOR PLAN AND ELEVATIONS (BY OTHERS)
1 OF 1	TOPOGRAPHIC SURVEY
C101	STORMWATER POLLUTION PREVENTION PLAN (PHASE I)
C102	SITE LAYOUT PLAN
C103	GRADING AND DRAINAGE PLAN
C104	STORMWATER POLLUTION PREVENTION PLAN (PHASE II)
C104a	STORMWATER POLLUTION PREVENTION PLAN (PHASE II) SPECIFICATIONS
C105	UTILITY PLAN
C106	MAINTENANCE OF TRAFFIC PLAN
C107–C108	STORM SEWER PLAN & PROFILE
C109	SANITARY SEWER LATERAL PLAN & PROFILE
C201 – C205	CONSTRUCTION DETAILS (CITY OF WESTFIELD)
C301 – C301D	WESTFIELD CONSTRUCTION SPECIFICATIONS
C302 – C303	LPGPS DETAILS AND SPECIFICATIONS
L101	LANDSCAPE PLAN
L201	LANDSCAPE DETAILS

LAND DESCRIPTION:

WARRANTY DEED INSTRUMENT NO. 2012–1063

PART OF THE SOUTHWEST QUARTER OF SECTION 10, TOWNSHIP 18 NORTH, RANGE 3 EAST, 2ND PRINCIPAL MERIDIAN, WASHINGTON TOWNSHIP, HAMILTON COUNTY, INDIANA, MORE PARTICULARLY DESCRIBED AS FOLLOWS:

BEGINNING AT THE SOUTHWEST CORNER OF SAID SOUTHWEST QUARTER; THENCE NORTH 00 DEGREES 09 MINUTES 21 SECONDS EAST ALONG THE WEST LINE OF SAID SOUTHWEST QUARTER (BASIS OF BEARINGS IS THE INDIANA STATE PLANE COORDINATES EAST ZONE) 676.00 FEET; THENCE NORTH 89 DEGREES 17 MINUTES 51 SECONDS EAST PARALLEL WITH THE SOUTH LINE OF SAID SOUTHWEST QUARTER 644.45 FEET; THENCE SOUTH 00 DEGREES 09 MINUTES 21 SECONDS WEST PARALLEL WITH THE WEST LINE OF SAID SOUTHWEST QUARTER 676.00 FEET TO THE SOUTH LINE OF SAID SOUTHWEST QUARTER; THENCE SOUTH 89 DEGREES 17 MINUTES 51 SECONDS WEST ALONG SAID SOUTH LINE 644.45 FEET TO THE POINT OF BEGINNING. CONTAINING 10.000 ACRES, MORE OR LESS.

BENCHMARK INFORMATION

SITE BENCHMARK–HAM 41.
DNR DISK STAMPED HAM 41 1998 ON THE NORTH SIDE OF 156TH STREET, ¼ MILE WEST OF DITCH ROAD.
ELEV – 917.54 (NAVD88)

TBM – CUT "+" ON NE BONNET BOLT OF FIRE HYDRANT AT THE SE QUADRANT OF 156TH STREET AND DITCH ROAD
ELEV – 917.10

NOTE:
THESE PLANS COMPLY WITH ALL ADA REQUIREMENTS

SOILS MAP

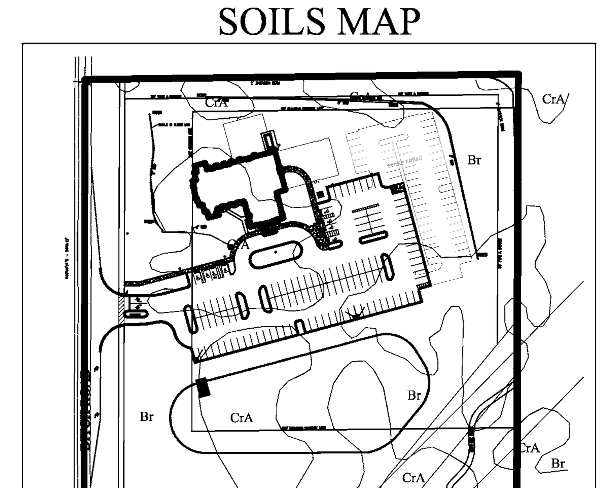

SOILS TYPE LEGEND
Br BROOKSTON SILTY CLAY LOAM
CrA CROSBY SILT LOAM, 0 TO 2 % SLOPES

BROOKSTON SILTY CLAY LOAM–

1. THIS SOIL IS DARK GREYISH BROWN, SILTY IN TEXTURE. IT IS DEEP AND VERY POORLY DRAINED WITH MODERATE PERMEABILITY. IT HAS HIGH AVAILABLE WATER FOR PLANT GROWTH AND HIGH ORGANIC MATTER CONTENT. IT HAS COMPACT TILL STARTING AT A DEPTH OF 40 TO 60 INCHES. THE MAIN SOIL FEATURES THAT AFFECT THE URBAN DEVELOPMENT USES ARE SEASONAL HIGH WATER TABLE, HIGH POTENTIAL FROST ACTION, MODERATE SHRINK–SWELL POTENTIAL, MODERATE PERMEABILITY AND PONDED SURFACE WATER.

2. BECAUSE OF THESE ENGINEERING LIMITATIONS THIS SITE WILL BE CONSTRUCTED AS FOLLOWS. EPIPHANY LUTHERAN CHURCH, BEING A CHURCH WITHIN THE JURISDICTION OF THE TOWN OF WESTFIELD AND HAMILTON COUNTY WILL HAVE TO ABIDE BY THE APPLICABLE ORDINANCE. SPECIAL CONSIDERATIONS WILL HAVE TO BE IMPLEMENTED TO REDUCE FAILURE OF CONSTRUCTION. ALL BUILDINGS WILL BE OF LARGE SLAB TYPE CONSTRUCTION, BASEMENTS SHOULD BE AVOIDED. IN CASES WHERE A HIGH WATER TABLE IS PRESENT SPECIAL FOOTINGS SHALL BE CONSTRUCTED. ALL ROADS WILL HAVE ADEQUATE SUB–BASE, THE BASE MATERIAL WILL BE REPLACED OR STRENGTHENED WITH SUITABLE MATERIAL. ALL SANITARY SEWERS SHALL BE PUBLIC AND THEREFORE NO SEPTIC SYSTEMS SHALL BE ALLOWED.

CROSBY SILT LOAM, 0–3 PERCENT SLOPES–

1. THIS SOIL IS DARK GRAYISH BROWN SILT LOAM ABOUT 8" THICK, SILTY IN TEXTURE AND ON LOCATED ON SLIGHT RISES ON BROAD, UNDULATING TILL PLAINS. IT IS DEEP AND SOMEWHAT POORLY DRAINED WITH SLOW PERMEABILITY. IT HAS HIGH AVAILABLE WATER FOR PLANT GROWTH AND MEDIUM ORGANIC MATTER CONTENT. THE SOIL HAS COMPACT TILL STARTING AT A DEPTH BETWEEN 20–40 INCHES. THE MAIN SOIL FEATURE THAT AFFECT URBAN DEVELOPMENT USES ARE SEASONAL HIGH WATER TABLE, MODERATE SHRINK SWELL POTENTIAL, HIGH POTENTIAL FROST ACTION AND SLOW PERMEABILITY.

2. BECAUSE OF THESE ENGINEERING LIMITATIONS THIS SITE WILL BE CONSTRUCTED AS FOLLOWS. EPIPHANY LUTHERAN CHURCH, BEING A CHURCH WITHIN THE JURISDICTION OF THE TOWN OF WESTFIELD AND HAMILTON COUNTY WILL HAVE TO ABIDE BY THE APPLICABLE ORDINANCE. SPECIAL CONSIDERATIONS WILL HAVE TO BE IMPLEMENTED TO REDUCE FAILURE OF CONSTRUCTION. ALL BUILDINGS WILL BE OF LARGE SLAB TYPE CONSTRUCTION. IN CASES WHERE A HIGH WATER TABLE IS PRESENT SPECIAL FOOTINGS SHALL BE CONSTRUCTED. ALL ROADS WILL HAVE ADEQUATE SUB–BASE, THE BASE MATERIAL WILL BE REPLACED OR STRENGTHENED WITH SUITABLE MATERIAL. ALL SANITARY SEWERS SHALL BE PUBLIC AND THEREFORE NO SEPTIC SYSTEMS SHALL BE ALLOWED.

MIAMI SILT LOAM, 2 TO 6 PERCENT SLOPES, ERODED

1. THE MAIN SOIL FEATURES THAT ADVERSELY AFFECT ENGINEERING USES OF THIS SOIL ARE MODERATE POTENTIAL FROST ACTION, MODERATELY SLOW PERMEABILITY, MODERATE SHRINK–SWELL POTENTIAL, AND LOW STRENGTH. EROSION IS A HAZARD DURING CONSTRUCTION. THIS SOIL IS SUITABLE FOR BUILDING SITES, BUT SLOPE, CLAYEY TEXTURE, SHRINKING AND SWELLING, AND LOW STRENGTH ARE MODERATE LIMITATIONS THAT NEED TO BE OVERCOME. LOW STRENGTH IS A SEVERE LIMITATION TO THE USE OF THIS SOIL FOR LOCAL ROADS AND STREETS. THE BASE MATERIAL FOR ROADS AND STREETS NEEDS TO BE STRENGTHENED WITH SUITABLE MATERIAL.

811
Know what's below.
Call before you dig.
Within Indiana Call
811 or 800–382–5544
24 Hours a Day, 7 Days a Week.
PER INDIANA STATE LAW IC 8–1–26. IT IS AGAINST THE LAW TO EXCAVATE WITHOUT NOTIFYING THE UNDERGROUND LOCATION SERVICE TWO (2) WORKING DAYS BEFORE COMMENCING WORK.

10505 N. College Avenue
Indianapolis, Indiana 46280
weihe.net
317 | 846 - 6611
800 | 452 - 6408
317 | 843 - 0546 *fax*
ALLAN H. WEIHE, P.E., L.S. - FOUNDER

WEIHE ENGINEERS
Land Surveying | Civil Engineering
Landscape Architecture

PROJECT NO.: W12.0262
DWG NAME: 120262–C001 title.dwg
DESIGNED BY: EAC/MG
DRAWN BY: EAC/MG
CHECKED BY: JKS
DATE: 06.29.2012

DATE	BY	REVISIONS AND ISSUES
07/26/12	EAC/MG	50% CD SET
8/23/12	EAC	REVISIONS PER WESTFIELD REVIEW

JAMES K. SHINNEMAN REGISTERED NO. 10200392 STATE OF INDIANA PROFESSIONAL ENGINEER
APPROVAL PENDING NOT FOR CONSTRUCTION

JAMES K. SHINNEMAN P.E. 10200392

PREPARED FOR:
EPIPHANY EVANGELICAL LUTHERAN CHURCH PHASE ONE
156TH AND DITCH ROAD, WESTFIELD IN
TITLE SHEET
Part of the SE Corner of SW/1/4 of Section 10, Township 18 North, Range 3 East, Washington Township, Hamilton County, Indiana

SHEET NO.
C001

PROJECT NO.
W12.0262

LOCATION: H:\2012\w120262\Engineering\design\conset\120262–C001 title.dwg
LAYOUT: C001 – Title Sheet
DATE/TIME: August 24, 2012 – 12:03pm
PLOTTED BY: cartere

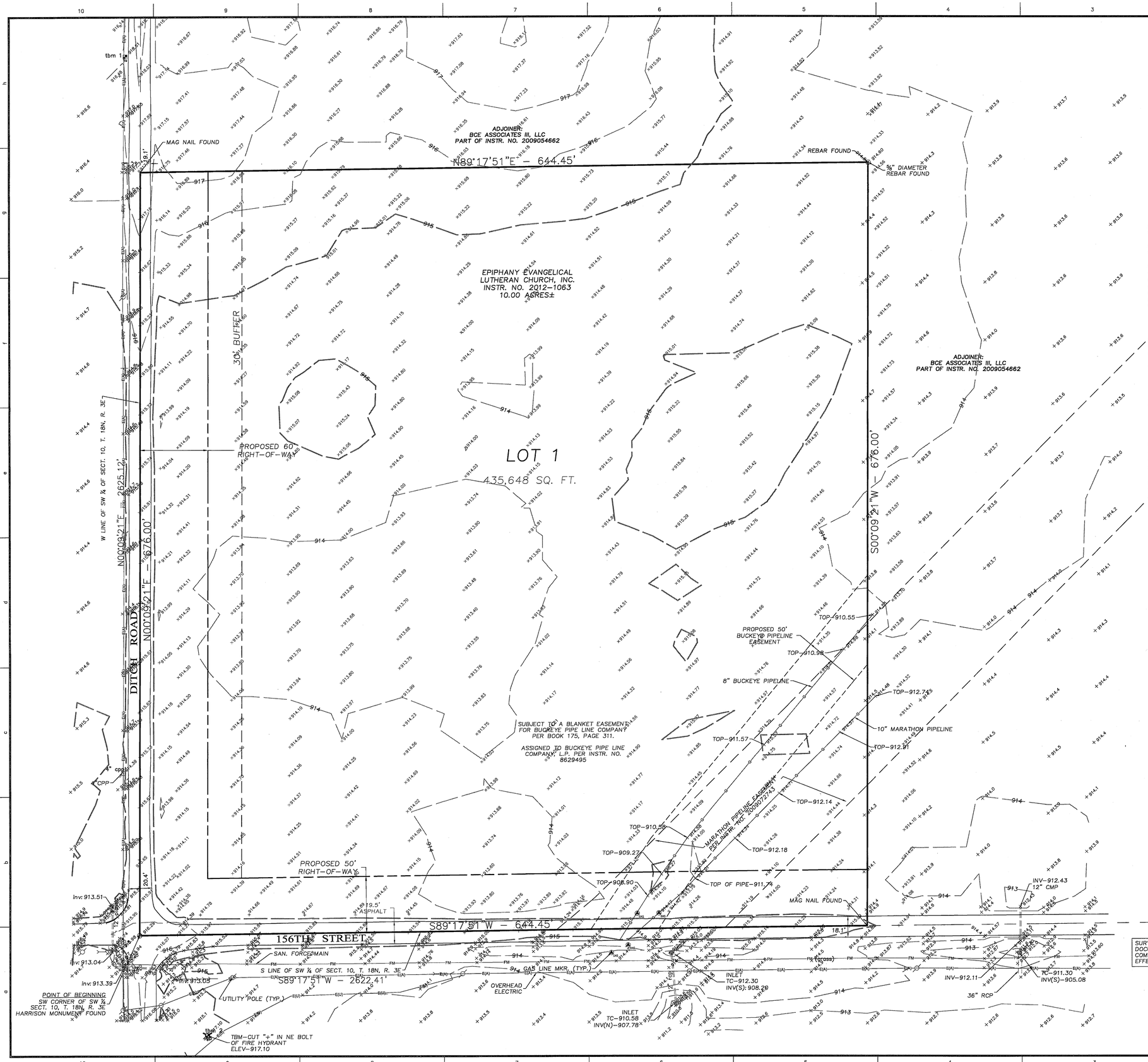

SITE BENCHMARK–HAM 41.
DNR DISK STAMPED HAM 41
1998 ON THE NORTH SIDE
OF 156TH STREET, ½ MILE
WEST OF DITCH ROAD.
ELEV – 917.54 (NAVD88)

TBM – CUT "+" ON NE
BONNET BOLT OF FIRE
HYDRANT AT THE SE
QUADRANT OF 156TH
STREET AND DITCH ROAD
ELEV – 917.10

SCALE: 1" = 40'

0 20 40 80

LAND DESCRIPTION
Warranty Deed Instrument No. 2012-1063

Part of the Southwest Quarter of Section 10, Township 18 North, Range 3 East, 2nd Principal Meridian, Washington Township, Hamilton County, Indiana, more particularly described as follows:

***BEGINNING** at the southwest corner of said Southwest Quarter; thence North 00 degrees 09 minutes 21 seconds East along the west line of said Southwest Quarter (basis of bearings is the Indiana State Plane Coordinates East Zone) 676.00 feet; thence North 89 degrees 17 minutes 51 seconds East parallel with the south line of said Southwest Quarter 644.45 feet; thence South 00 degrees 09 minutes 21 seconds West parallel with the west line of said Southwest Quarter 676.00 feet to the south line of said Southwest Quarter; thence South 89 degrees 17 minutes 51 seconds West along said south line 644.45 feet to the **POINT OF BEGINNING**. Containing 10.000 acres, more or less.*

This survey was performed under the direction of the undersigned, and to the best of this surveyor's knowledge and belief was executed according to survey requirements in 865 IAC 1.12 for the State of Indiana and to the best of this surveyor's knowledge and belief, represents a topographic survey performed under my supervision on May 29, 2012.

Dated June 25, 2012

Brady Kuhn, Registered Land Surveyor #20500007
State of Indiana

BRADY KUHN REGISTERED No. 20500007 STATE OF INDIANA LAND SURVEYOR

NOTE: Boundary shown hereon based on an ALTA/ACSM Land Title Survey prepared by American Structurepoint under Job No. 201100778, dated 12/23/11. Monuments shown (MAG nails and a capped rebar) on said survey were found and utilized for horizontal control.

Representatives of the Buckeye and Marathon Pipeline Companies probed the actual depths of their respective pipelines on May 28, 2012. Those depths are shown hereon.

SURVEYOR'S NOTE: ON FEBRUARY 6, 2012, WEIHE ENGINEERS SUBMITTED DOCUMENTATION TO THE RIGHT OF WAY DEPARTMENT OF BUCKEYE PIPE LINE COMPANY, REQUESTING THAT THE BLANKET-TYPE EASEMENT, CURRENTLY IN EFFECT AND IN FAVOR OF BUCKEYE, BE PARTIALLY RELEASED.

10505 N. College Avenue
Indianapolis, Indiana 46280
weihe.net
317 | 846 - 6611
800 | 452 - 0408
317 | 843 - 0346 fax
ALLAN H. WEIHE, P.E., L.S. - FOUNDER

WEIHE ENGINEERS
Land Surveying | Civil Engineering
Landscape Architecture

REVISIONS AND ISSUES	DATE	BY

PROJECT NO.: W120262
DWG NAME:
FIELD BY: RB
DRAWN BY: SH
CHECKED BY: BK
DATE: 6/25/12

PREPARED FOR:

Halstead Architects

SITE ADDRESS – N.E. CORNER OF 156TH STREET AND DITCH ROAD, WESTFIELD, IN

TOPOGRAPHIC SURVEY
PT. SW 1/4 SEC. 10, T18N, R3E, WASHINGTON TWP., HAMILTON CO., IN

SHEET NO. 1 OF 1

PROJECT NO. W120262

LOCATION: V:\2010\W120262\Surveying\W120262.dwg
LAYOUT: 1(PD) 48" SCALE:
PLOTTED: Mon Jun 25, 2012 - 11:33am
PLOTTER: Brady Kuhn

EPIPHANY EVANGELICAL LUTHERAN CHURCH
PRIMARY PLAT
BLOCK A
OF THE CENTENNIAL NORTH
PLANNED UNIT DEVELOPMENT

PLANS PREPARED FOR:

HALSTEAD ARCHITECTS
1139 SHELBY STREET
INDIANAPOLIS, IN 46203
TELEPHONE: (317) 684-1431
FAX: (317) 684-1433
CONTACT PERSON: MICHAEL HALSTEAD

PLANS PREPARED BY:

WEIHE ENGINEERS, INC.
10505 N. COLLEGE AVE.
INDIANAPOLIS, INDIANA 46280
TELEPHONE: (317) 846-6611
FAX: (317) 843-0546
CONTACT PERSON: JAMIE SHINNEMAN
EMAIL: SHINNEMANJ@WEIHE.NET

LAND DESCRIPTION:

WARRANTY DEED INSTRUMENT NO. 2012-1063

PART OF THE SOUTHWEST QUARTER OF SECTION 10, TOWNSHIP 18 NORTH, RANGE 3 EAST, 2ND PRINCIPAL MERIDIAN, WASHINGTON TOWNSHIP, HAMILTON COUNTY, INDIANA, MORE PARTICULARLY DESCRIBED AS FOLLOWS:

BEGINNING AT THE SOUTHWEST CORNER OF SAID SOUTHWEST QUARTER; THENCE NORTH 00 DEGREES 09 MINUTES 21 SECONDS EAST ALONG THE WEST LINE OF SAID SOUTHWEST QUARTER (BASIS OF BEARINGS IS THE INDIANA STATE PLANE COORDINATES EAST ZONE) 676.00 FEET; THENCE NORTH 89 DEGREES 17 MINUTES 51 SECONDS EAST PARALLEL WITH THE SOUTH LINE OF SAID SOUTHWEST QUARTER 644.45 FEET; THENCE SOUTH 00 DEGREES 09 MINUTES 21 SECONDS WEST PARALLEL WITH THE WEST LINE OF SAID SOUTHWEST QUARTER 676.00 FEET TO THE SOUTH LINE OF SAID SOUTHWEST QUARTER; THENCE SOUTH 89 DEGREES 17 MINUTES 51 SECONDS WEST ALONG SAID SOUTH LINE 644.45 FEET TO THE POINT OF BEGINNING. CONTAINING 10.000 ACRES, MORE OR LESS.

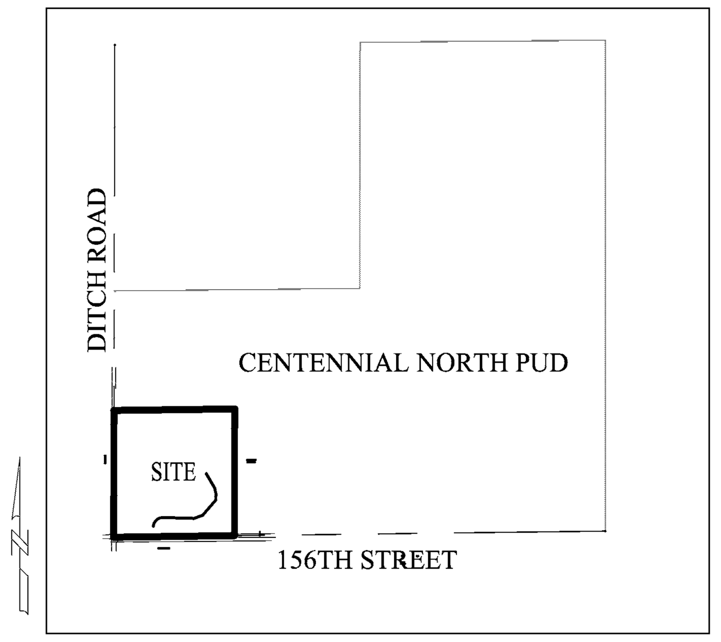

SITE LOCATION MAP

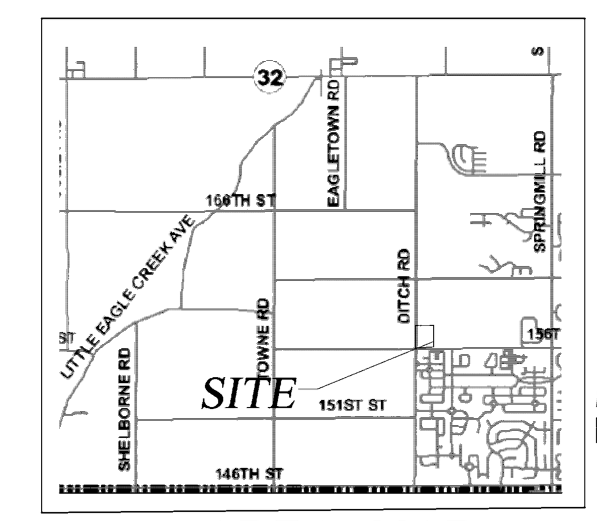

AREA MAP

SOILS MAP

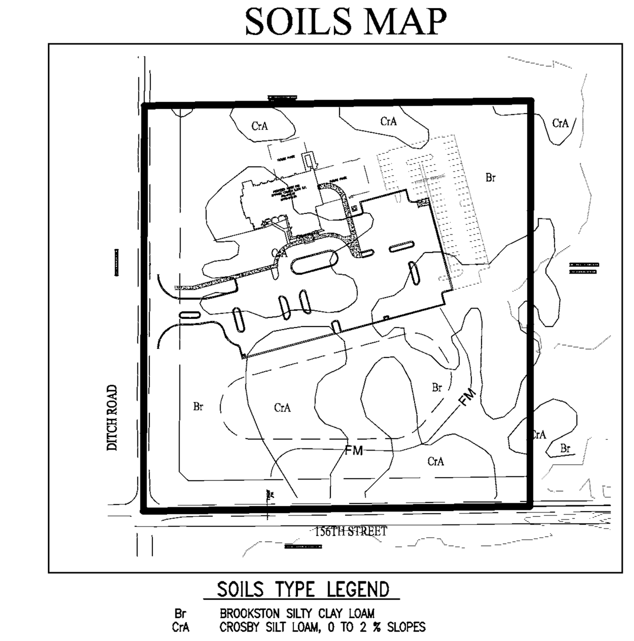

NO SCALE

SOILS TYPE LEGEND
Br BROOKSTON SILTY CLAY LOAM
CrA CROSBY SILT LOAM, 0 TO 2 % SLOPES

SOIL MAP

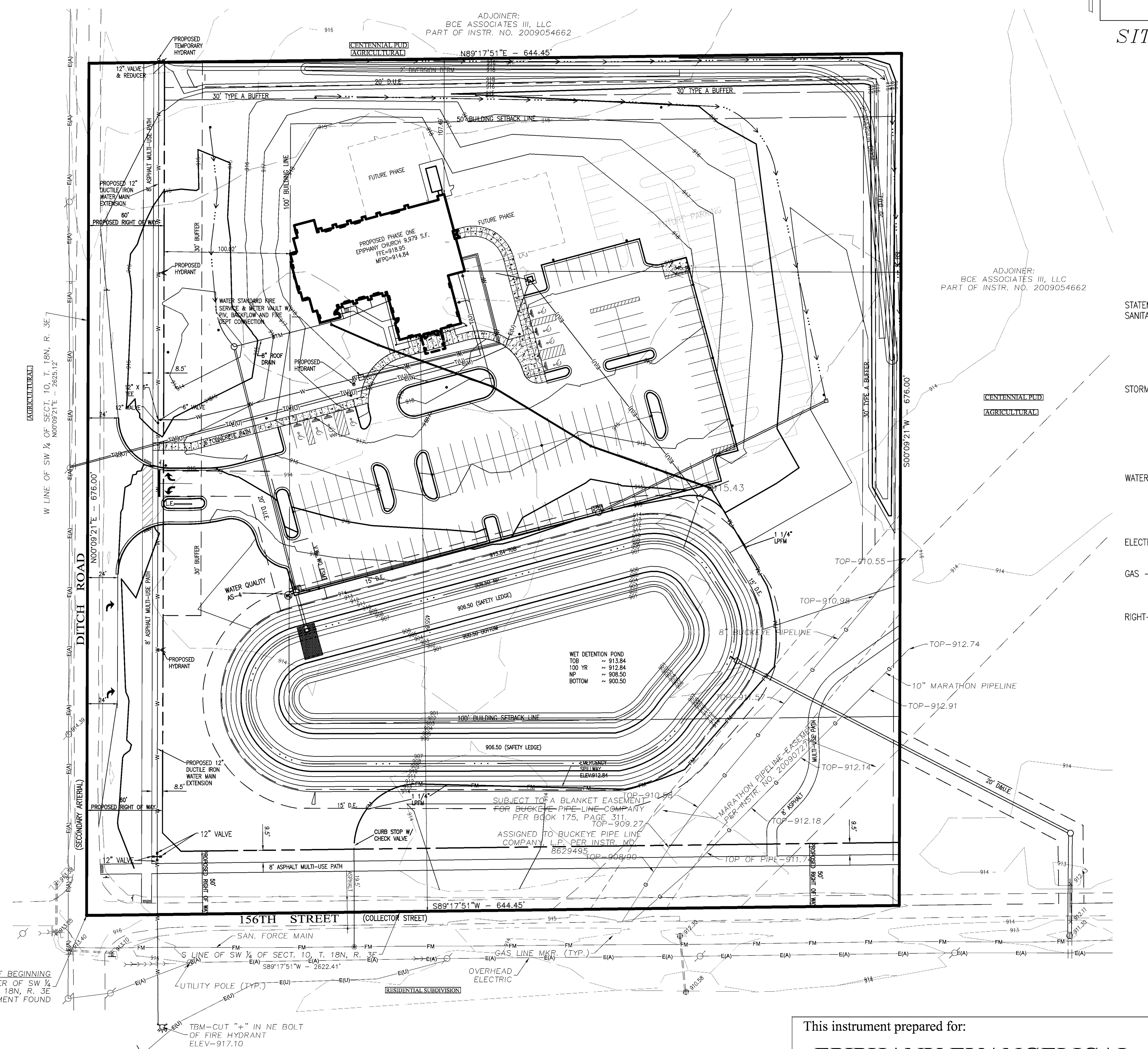

LEGEND

Symbol		Description
FH	=	EXIST. FIRE HYDRANT
WM	=	EXIST. WATER METER/VALVE
	=	EXIST. SIGN
	=	EXIST. MONITOR WELL
• PKF	=	EXIST. IRON PIN & OR PK (SET/FOUND)
GM	=	EXIST. GAS METER
	=	EXIST. GAS VALVE
	=	EXIST. STORM INLET
MH	=	EXIST. STORM/SAN./TELE. MANHOLE
EM	=	EXIST. ELECTRIC METER
	=	EXIST. POWER POLE/POWER POLE w/ LIGHT
GA	=	EXIST. GUY ANCHOR
T.Ped.	=	EXIST. TELEPHONE PEDESTAL
AC	=	HVAC UNIT
CO	=	EXIST. CLEANOUT
MB	=	MAILBOX
	=	EXIST. LIGHT
BOL	=	EXIST. BOLLARD
	=	EXIST. SANITARY SEWER LINE
	=	EXIST. STORM SEWER LINE
892	=	EXIST. CONTOURS
	=	CONCRETE END SECTION (C.E.S.)
GP	=	GATE POST
	=	TRANSFORMER
	=	RIGHT-OF-WAY LINE
	=	PROPOSED SANITARY SEWER LINE
	=	PROPOSED STORM SEWER LINE
STM	=	PROPOSED HDPE ROOF DRAIN
	=	PROPOSED PIPE BOLLARD
	=	PROPOSED MANHOLE
892	=	PROPOSED CONTOURS
894.50	=	PROPOSED ELEVATION
	=	DRAINAGE FLOW ARROW
W	=	WATER LINE
G	=	GAS LINE
F.F.E.	=	FINISH FLOOR ELEVATION
TC	=	TOP OF (MANHOLE / INLET) CASTING
INV	=	INVERT (BOTTOM) ELEVATION OF (PIPE)
RCP	=	REINFORCED CONCRETE PIPE
CMP	=	CORRUGATED METAL PIPE
CPP	=	CORRUGATED PLASTIC PIPE
PVC	=	POLYVINYL CHLORIDE PIPE
STR.	=	STRUCTURE
M.E.G.	=	MATCH EXISTING GRADE
SSD	=	SUB-SURFACE DRAINAGE
TOC	=	TOP OF CURB
GUT	=	GUTTER
OUL	=	OVERHEAD UTILITY LINE
T	=	TELEPHONE LINE
TBM	=	TEMPORARY BENCHMARK
E	=	ELECTRIC LINE
	=	CONSTRUCTION LIMITS

STATEMENT:

SANITARY SEWER – TO BE PROVIDED BY WESTFIELD PUBLIC WORKS. A TEMPORARY LOW PRESSURE GRINDER PUMP SYSTEM TO EXISTING FORCE MAIN ALONG 156TH STREET. IT IS ANTICIPATED THAT FUTURE SEWER CONNECTION TO A NEW INTERCEPTOR MAIN WILL OCCUR.

STORM SEWER – THE PROJECT FALLS WITHIN THE WILLIAMS CREEK REGULATED DRAIN WATERSHED. AN ONSITE POND WILL COLLECT DRAINAGE WATER FROM ONSITE AND OUTLET VIA A 24" PIPE TO 156TH AND THEN A 36" PIPE UNDER 156TH TO AN EXISTING MANHOLE (CENTENNIAL SECTION 9 ARM OF WILLIAMS CREEK)

WATER – TO BE PROVIDED BY WESTFIELD PUBLIC WORKS. A NEW 12" WATER MAIN EXTENSION TO THE NORTH BOUNDARY LINE OF THE PROPERTY. THE SITE SERVICE WILL CONNECT TO THIS NEW MAIN EXTENSION.

ELECTRIC – TO BE PROVIDED BY DUKE ENERGY. 3 PHASE IS AVAILABLE.

GAS – TO BE PROVIDED BY VECTREN ENERGY DELIVERY UNTIL CITIZENS GAS HAS EXTENDED THEIR FACILITIES TO THE SITE AT A LATER DATE.

RIGHT-OF-WAY – AN DECELERATION / ACCELERATION LANE WILL BE CONSTRUCTION OFF OF DITCH ROAD. 8' MULTI-USE PATHS WILL BE CONSTRUCTION ALONG BOTH 156TH AND DITCH ROAD.

BROOKSTON SILTY CLAY LOAM–

1. THIS SOIL IS DARK GREYISH BROWN, SILTY IN TEXTURE. IT IS DEEP AND VERY POORLY DRAINED WITH MODERATE PERMEABILITY. IT HAS HIGH AVAILABLE WATER FOR PLANT GROWTH AND HIGH ORGANIC MATTER CONTENT. IT HAS COMPACT TILL STARTING AT A DEPTH OF 40 TO 60 INCHES. THE MAIN SOIL FEATURES THAT AFFECT THE URBAN DEVELOPMENT USES ARE SEASONAL HIGH WATER TABLE, HIGH POTENTIAL FROST ACTION, MODERATE SHRINK-SWELL POTENTIAL, MODERATE PERMEABILITY AND PONDED SURFACE WATER.

2. BECAUSE OF THESE ENGINEERING LIMITATIONS THIS SITE WILL BE CONSTRUCTED AS FOLLOWS. EPIPHANY LUTHERAN CHURCH, BEING A CHURCH WITHIN THE JURISDICTION OF THE TOWN OF WESTFIELD AND HAMILTON COUNTY WILL HAVE TO ABIDE BY THE APPLICABLE ORDINANCE. SPECIAL CONSIDERATIONS WILL HAVE TO BE IMPLEMENTED TO REDUCE FAILURE OF CONSTRUCTION. ALL BUILDINGS WILL BE OF LARGE SLAB TYPE CONSTRUCTION, BASEMENTS SHOULD BE AVOIDED. IN CASES WHERE A HIGH WATER TABLE IS PRESENT SPECIAL FOOTINGS SHALL BE CONSTRUCTED. ALL ROADS WILL HAVE ADEQUATE SUB-BASE, THE BASE MATERIAL WILL BE REPLACED OR STRENGTHENED WITH SUITABLE MATERIAL. ALL SANITARY SEWERS SHALL BE PUBLIC AND THEREFORE NO SEPTIC SYSTEMS SHALL BE ALLOWED.

CROSBY SILT LOAM, 0-3 PERCENT SLOPES–

1. THIS SOIL IS DARK GRAYISH BROWN SILT LOAM ABOUT 8" THICK, SILTY IN TEXTURE AND ON LOCATED ON SLIGHT RISES ON BROAD, UNDULATING TILL PLAINS. IT IS DEEP AND SOMEWHAT POORLY DRAINED WITH SLOW PERMEABILITY. IT HAS HIGH AVAILABLE WATER FOR PLANT GROWTH AND MEDIUM ORGANIC MATTER CONTENT. THE SOIL HAS COMPACT TILL STARTING AT A DEPTH BETWEEN 20-40 INCHES. THE MAIN SOIL FEATURE THAT AFFECT URBAN DEVELOPMENT USES ARE SEASONAL HIGH WATER TABLE, MODERATE SHRINK SWELL POTENTIAL, HIGH POTENTIAL FROST ACTION AND SLOW PERMEABILITY.

2. BECAUSE OF THESE ENGINEERING LIMITATIONS THIS SITE WILL BE CONSTRUCTED AS FOLLOWS. EPIPHANY LUTHERAN CHURCH, BEING A CHURCH WITHIN THE JURISDICTION OF THE TOWN OF WESTFIELD AND HAMILTON COUNTY WILL HAVE TO ABIDE BY THE APPLICABLE ORDINANCE. SPECIAL CONSIDERATIONS WILL HAVE TO BE IMPLEMENTED TO REDUCE FAILURE OF CONSTRUCTION. ALL BUILDINGS WILL BE OF LARGE SLAB TYPE CONSTRUCTION. IN CASES WHERE A HIGH WATER TABLE IS PRESENT SPECIAL FOOTINGS SHALL BE CONSTRUCTED. ALL ROADS WILL HAVE ADEQUATE SUB-BASE, THE BASE MATERIAL WILL BE REPLACED OR STRENGTHENED WITH SUITABLE MATERIAL. ALL SANITARY SEWERS SHALL BE PUBLIC AND THEREFORE NO SEPTIC SYSTEMS SHALL BE ALLOWED.

MIAMI SILT LOAM, 2 TO 6 PERCENT SLOPES, ERODED

1. THE MAIN SOIL FEATURES THAT ADVERSELY AFFECT ENGINEERING USES OF THIS SOIL ARE MODERATE POTENTIAL FROST ACTION, MODERATELY SLOW PERMEABILITY, MODERATE SHRINK-SWELL POTENTIAL, AND LOW STRENGTH. EROSION IS A HAZARD DURING CONSTRUCTION. THIS SOIL IS SUITABLE FOR BUILDING SITES, BUT SLOPE, CLAYEY TEXTURE, SHRINKING AND SWELLING, AND LOW STRENGTH ARE MODERATE LIMITATIONS THAT NEED TO BE OVERCOME. LOW STRENGTH IS A SEVERE LIMITATION TO THE USE OF THIS SOIL FOR LOCAL ROADS AND STREETS. THE BASE MATERIAL FOR ROADS AND STREETS NEEDS TO BE STRENGTHENED WITH SUITABLE MATERIAL.

SCALE: 1" = 50'
0 25 50 100

DATE: AUGUST 10, 2012

This instrument prepared for:

EPIPHANY EVANGELICAL
LUTHERAN CHURCH
1948 State Road 32, Westfield, IN 46074
PHONE: 317-989-0403

This instrument prepared by:

WEIHE ENGINEERS
Land Surveying | Civil Engineering
Landscape Architecture

10505 N. College Avenue
Indianapolis, Indiana 46280
weihe.net

317 | 846 - 6611
800 | 452 - 6408
317 | 843 - 0546 *fax*

ALLAN H. WEIHE, P.E., L.S. - FOUNDER

LOCATION: H:\2012\w120262\Engineering\design\conset\primary plat.dwg
LAYOUT: PRIMARY PLAT
DATE/TIME: August 29, 2012 - 4:02pm
PLOTTED BY: cartere

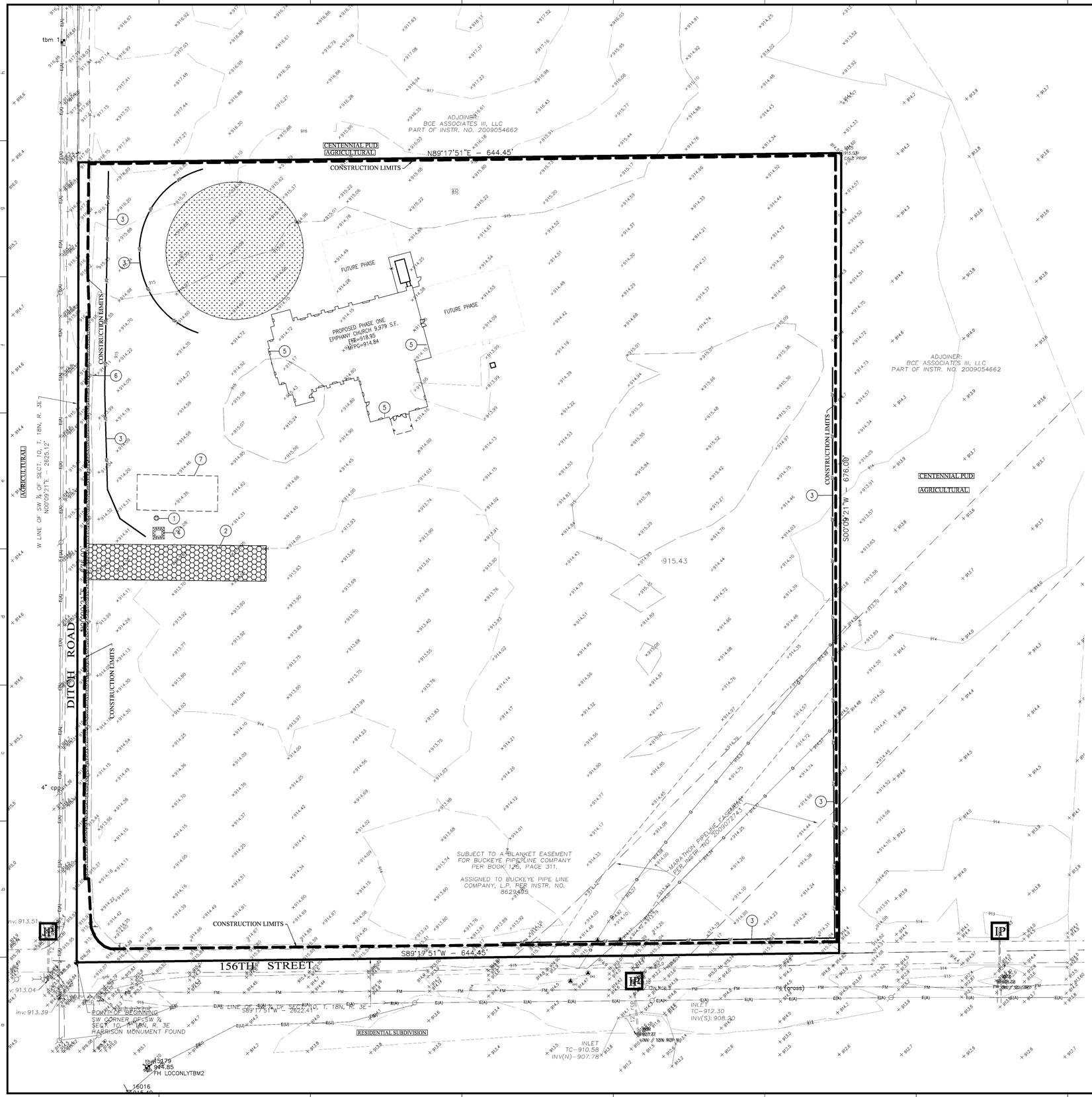

GENERAL NOTES:

1) IT SHALL BE THE RESPONSIBILITY OF THE CONTRACTOR TO VERIFY WITH THE OWNER DURING BIDDING AND DURING CONSTRUCTION ACTIVITIES ALL ITEMS TO BE REMOVED. IT IS THE RESPONSIBILITY OF THE CONTRACTOR TO REMOVE ANY MATERIALS AND/OR STRUCTURES NOT LOCATED ON THIS SURVEY FOR THE INSTALLATION OF THE NEW WORK.

2) IT SHALL BE THE RESPONSIBILITY OF THE CONTRACTOR TO VERIFY ALL EXISTING UTILITIES PERTAINING TO THEIR PHASE OF WORK, AND TO VERIFY WHICH UTILITIES WILL BE REMOVED BY UTILITY COMPANY. ANY AND ALL UTILITIES NOT REMOVED BY THE UTILITY COMPANY SHALL BE REMOVED BY THE CONTRACTOR.

3) UTILITIES ARE SHOWN TO BE APPROXIMATE AND SHALL BE RELOCATED AND/OR CAPPED AND ABANDONED BEFORE CONSTRUCTION AT NO ADDITIONAL COST TO THE OWNER.

4) ALL DEMOLITION MATERIAL AND SALVAGEABLE MATERIAL IS THE PROPERTY OF THE DEMOLITION CONTRACTOR AND SHALL BE PROPERLY DISPOSED OF OFF THE SITE.

5) SLABS ON GRADE MUST BE REMOVED COMPLETELY AND TAKEN OFF THE SITE.

6) ALL UTILITIES MUST REMAIN ACTIVE FOR AREA TENANTS THAT ARE REMAINING. NO UTILITY SERVICE SHALL BE INTERRUPTED DURING THE CONSTRUCTION PROCESS.

7) BEARINGS, DIMENSIONS, AND EASEMENTS ARE SHOWN FOR REFERENCE ONLY. SEE RECORD SURVEYS AND PLATS FOR EXACT INFORMATION.

8) IF THERE ARE ANY QUESTIONS CONCERNING THIS DEMOLITION PLAN, PLEASE CONTACT THE ENGINEER BEFORE CONTINUING WORK.

WEIHE ENGINEERS, INC.
10505 NORTH COLLEGE AVENUE
INDIANAPOLIS, INDIANA 42680
(317) 846-6611 OR
TOLL FREE 1-800-452-6408

HATCH LEGEND
2' MILL EXISTING ASPHALT PAVEMENT

SITE PREPARATION / SWPPP PHASE I NOTES:

1. INSTALL PERMIT POSTING AREA. 4" PVC TUBE WITH END CAPS ATTACHED TO PROJECT CONSTRUCTION SIGN TO CONTAIN APPROVED CONSTRUCTION DRAWINGS AND PERMITS FOR INSPECTORS.
2. INSTALL CONSTRUCTION ENTRANCE. REFER TO DETAIL ON SHEET C201
3. INSTALL SILT FENCE. REFER TO DETAIL ON SHEET C201
4. INSTALL CONCRETE WASHOUT. REFER TO DETAIL ON SHEET C201
5. LIMITS OF PROPOSED BUILDING
6. REMOVE EXISTING SIGN(S) AND RELOCATE
7. CONSTRUCTION STAGING AREA

LEGEND

FH	EXIST. FIRE HYDRANT
WM	EXIST. WATER METER/VALVE
	EXIST. SIGN
	EXIST. MONITOR WELL
PKF	EXIST. IRON PIN & OR PK (SET/FOUND)
GM GV	EXIST. GAS METER
	EXIST. GAS VALVE
	EXIST. STORM INLET
	EXIST. STORM/SAN./TELE. MANHOLE
EM	EXIST. ELECTRIC METER
	EXIST. POWER POLE/POWER POLE w/ LIGHT
GAx	EXIST. GUY ANCHOR
T.Ped	EXIST. TELEPHONE PEDESTAL
AC	HVAC UNIT
CO	EXIST. CLEANOUT
MB	MAILBOX
	EXIST. LIGHT
BOL	EXIST. BOLLARD
	EXIST. SANITARY SEWER LINE
	EXIST. STORM SEWER LINE
892	EXIST. CONTOURS
	CONCRETE END SECTION (C.E.S.)
SP	GATE POST
	TRANSFORMER
	RIGHT-OF-WAY LINE
	PROPOSED SANITARY SEWER LINE
	PROPOSED STORM SEWER LINE
STM	PROPOSED HDPE ROOF DRAIN
	PROPOSED PIPE BOLLARD
	PROPOSED MANHOLE
892	PROPOSED CONTOURS
934.50	PROPOSED ELEVATION
	DRAINAGE FLOW ARROW
W	WATER LINE
G	GAS LINE
F.F.E.	FINISH FLOOR ELEVATION
TC	TOP OF (MANHOLE / INLET) CASTING
INV	INVERT (BOTTOM) ELEVATION OF (PIPE)
RCP	REINFORCED CONCRETE PIPE
CMP	CORRUGATED METAL PIPE
CPP	CORRUGATED PLASTIC PIPE
PVC	POLYVINYL CHLORIDE PIPE
STR.	STRUCTURE
M.E.G.	MATCH EXISTING GRADE
SSD	SUB-SURFACE DRAINAGE
TOC	TOP OF CURB
GUT	GUTTER
OUL	OVERHEAD UTILITY LINE
T	TELEPHONE LINE
TBM	TEMPORARY BENCHMARK
E	ELECTRIC LINE
	CONSTRUCTION LIMITS

SWPPP 1 LEGEND

- IP – INLET PROTECTION – USE SUBSURFACE INLET PROTECTION WITH OVERFLOW CAPABILITY (DANDY SAC)
- – CONSTRUCTION ENTRANCE
- – STAGING AREA (SEE DETAIL)
- – STOCKPILE AREA (TEMPORARY SEEDING REQUIRED)
- – POSTING AREA – 4" PVC TUBE WITH END CAPS ATTACHED TO PROJECT CONSTRUCTION SIGN TO CONTAIN APPROVED CONSTRUCTION DRAWINGS AND PERMITS FOR INSPECTORS.
- –SF– – SILT FENCE
- – CONCRETE WASHOUT

NOTE:
EROSION CONTROL PLAN (SWPPP1) MUST BE EXECUTED BEFORE ANY CONSTRUCTION COMMENCES.

NOTE:
ADDITIONAL EROSION CONTROL MEASURES MAY BE REQUIRED IN THE FIELD BY THE WPWD INSPECTOR

NOTE:
ALL EROSION CONTROL MATERIAL NEEDS TO BE APPROVED BY THE WPWD INSPECTORS PRIOR TO INSTALLATION

EXISTING AREAS
TOTAL SITE = 10.00 AC.
DISTURBED = 10.00 AC.
PERVIOUS = 10.00 AC.
IMPERVIOUS = 0.00 AC.

SCALE: 1" = 40'
0 20 40 80

811 Know what's below. Call before you dig.
Within Indiana Call 811 or 800-382-5544
24 Hours a Day, 7 Days a Week.
PER INDIANA STATE LAW IC 8-1-26, IT IS AGAINST THE LAW TO EXCAVATE WITHOUT NOTIFYING THE UNDERGROUND LOCATION SERVICE TWO (2) WORKING DAYS BEFORE COMMENCING WORK.

10505 N. College Avenue
Indianapolis, Indiana 46280
weihe.net
317 | 846 - 6611
800 | 452 - 6408
317 | 843 - 0546 fax
ALLAN H. WEIHE, P.E., L.S. - FOUNDER
WEIHE ENGINEERS
Land Surveying | Civil Engineering
Landscape Architecture

DATE	BY	REVISIONS AND ISSUES
07/26/12	EAC/MC	PROJECT NO. W12.0262
8/23/12	EAC	DWG. NAME: 120262-C101 swppp1.dwg

DESIGNED BY: EAC/MG
DRAWN BY: EAC/MG
CHECKED BY: JKS
DATE: 08/28/2012

REVISIONS AND ISSUES
1 REVISIONS PER WESTFIELD REVIEW

JAMES K. SHINNEMAN REGISTERED PROFESSIONAL ENGINEER NO. 10200392 STATE OF INDIANA
APPROVED BY: JAMES K. SHINNEMAN P.E. 10200392

JAMES K. SHINNEMAN P.E. 10200392

PREPARED FOR:
EPIPHANY EVANGELICAL LUTHERAN CHURCH PHASE ONE
156TH AND DITCH ROAD, WESTFIELD IN
SWPPP (PHASE I)
Part of the SE Corner of SW1/4 of Section 10, Township 18 North, Range 3 East, Washington Township, Hamilton County, Indiana

SHEET NO.
C101
PROJECT NO.
W12.0262

LOCATION: H:\2012\W12\0262\Engineering\design\consult\120262-C101 swppp1.dwg
LAYOUT: C101 SWPPP1
DATE/TIME: August 24, 2012 - 12:03pm
PLOTTED BY: corbere

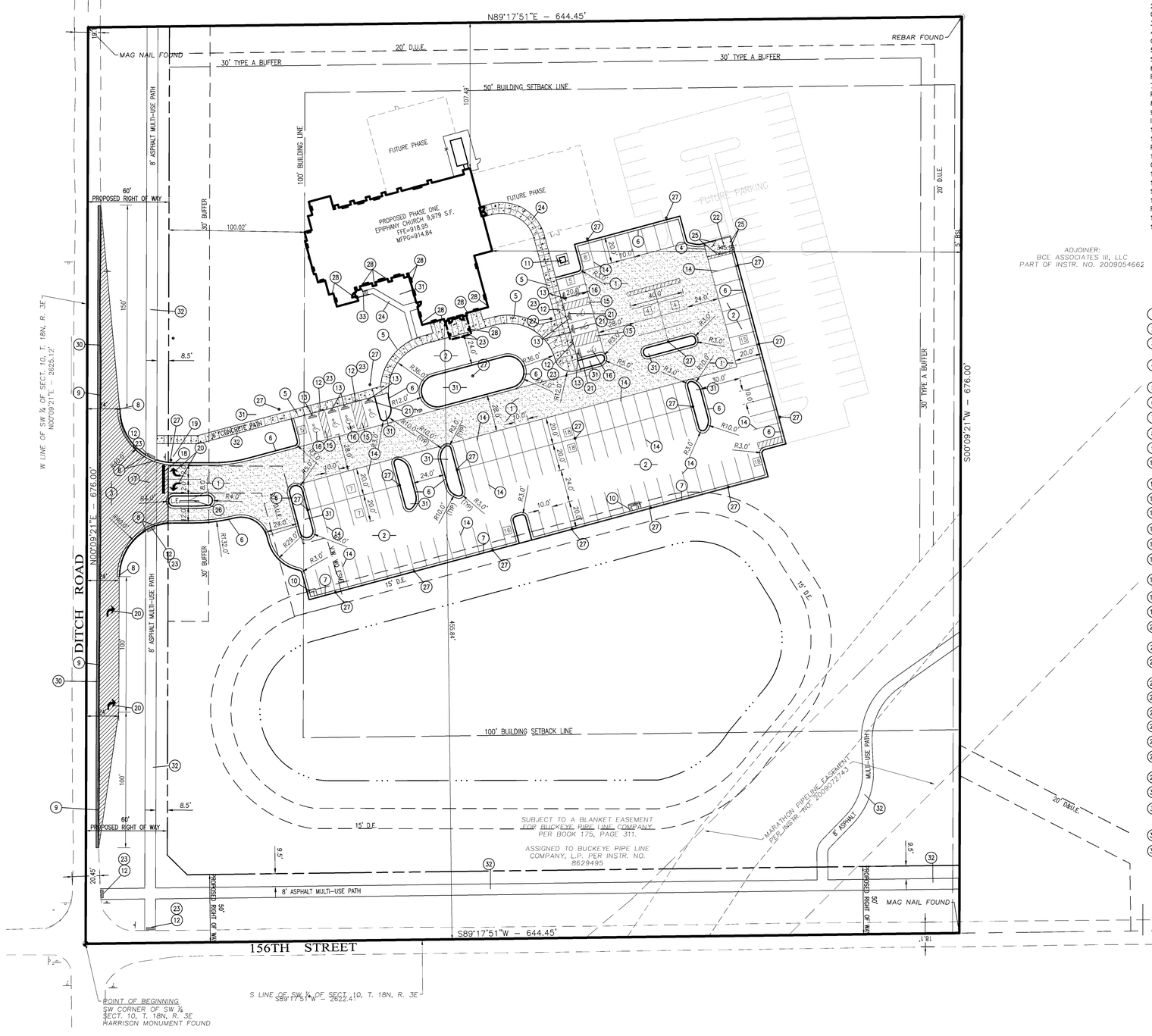

GENERAL NOTES:

1) THE CONTRACTOR SHALL BE RESPONSIBLE FOR OBTAINING, OR VERIFYING THAT ALL PERMITS AND APPROVALS ARE OBTAINED FROM THE RESPECTIVE CITY, COUNTY, AND STATE AGENCIES PRIOR TO STARTING CONSTRUCTION.
2) IT SHALL BE THE CONTRACTORS RESPONSIBILITY TO DETERMINE THE EXACT LOCATION OF ALL EXISTING UTILITIES IN THE VICINITY OF THE CONSTRUCTION AREA PRIOR TO STARTING CONSTRUCTION
3) IT SHALL BE THE CONTRACTORS RESPONSIBILITY TO NOTIFY AND COORDINATE CONSTRUCTION WITH ALL RESPECTIVE UTILITIES.
4) ALL QUANTITIES GIVEN ON THESE PRINTS, VERBALLY OR IN THE SCOPE OF WORK SECTION ARE ESTIMATES AND SHALL BE CONFIRMED BY THE BIDDING CONTRACTORS.
5) OCCUPATIONAL SAFETY AND HEALTH ADMINISTRATION (OSHA) STANDARDS FOR EXCAVATIONS; FINAL RULE 29 CFR PART 1926, SUBPART "P" APPLIES TO ALL EXCAVATIONS EXCEEDING FIVE (5) FEET IN DEPTH.
6) IN ADDITION, EXCAVATION EXCEEDING TWENTY (20) FEET IN DEPTH REQUIRE THE DESIGN OF A TRENCH SAFETY SYSTEM BY A REGISTERED PROFESSIONAL ENGINEER.
7) IT SHALL BE THE RESPONSIBILITY OF THE DEVELOPER AND CONTRACTOR TO MAINTAIN QUALITY CONTROL THROUGHOUT THIS PROJECT.
8) TEMPORARY TRAFFIC CONTROL DURING CONSTRUCTION TO CONFORM TO APPLICABLE LOCAL STANDARDS.
9) BEARINGS, DIMENSIONS, AND EASEMENTS ARE SHOWN FOR REFERENCE ONLY. SEE RECORD SURVEYS AND PLATS FOR EXACT INFORMATION.
10) ANY FIELD TILES ENCOUNTERED DURING EXCAVATION SHALL BE REPAIRED AND POSITIVE DRAINAGE PRESERVED.
11) THE ENGINEER AND/OR OWNER DISCLAIM ANY ROLE IN THE CONSTRUCTION MEANS AND METHODS ASSOCIATED WITH THE PROJECT.
12) THE LOWEST FLOOR ELEVATION RECEIVING GRAVITY SERVICE MUST BE A MINIMUM OF ONE (1) FOOT ABOVE THE TOP OF CASTING OF THE NEAREST SANITARY SEWER MANHOLE, OR A GRINDER PUMP SHALL BE REQUIRED.
13) ALL DIMENSIONS ARE BASED ON FACE OF CURB OR BACK OF ROLL CURB OR FACE OF BUILDING.
14) SEE ARCHITECTURAL PLANS FOR DETAILS OF BUILDING, BUILDING DIMENSIONS, ATM RELATED DETAILS, AND SIGNAGE SPECIFICATIONS. DO NOT STAKE BUILDING FROM THESE PLANS.
15) COORDINATE CONSTRUCTION ACTIVITIES WITH ADJOINING WORK. VERIFY EXTENT OF ADJOINING WORK AND COORDINATE AS REQUIRED.
16) FIELD VERIFY EXISTING CURBS AND TAPER PROPOSED VERTICAL CURBS TO MATCH WITHIN A MIN. OF THREE (3) FEET.
17) ± DIMENSIONS INDICATE FIELD DIMENSION ADJUSTMENT AREA BASED ON ACTUAL FIELD LAYOUT COORDINATES.

PLAN NOTES:

1. HEAVY DUTY ASPHALT PAVING PER DETAIL ON SHEET C202
2. LIGHT DUTY ASPHALT PAVING PER DETAIL ON SHEET C202
3. RIGHT-OF-WAY ASPHALT OR CONCRETE PAVING PER DETAIL ON SHEET C202
4. PROPOSED HEAVY DUTY CONCRETE WITH 1' CHAMFERED CORNERS PER DETAIL ON SHEET C202
5. INTEGRAL WALK AND CURB PER DETAIL ON SHEET C202
6. PROPOSED 6" CURB AND GUTTER PER DETAIL ON SHEET C202
7. PROPOSED 8" CURB AND GUTTER PER DETAIL ON SHEET C202
8. TAPER CURB WITHIN 3 FEET
9. MATCH EXISTING PAVEMENT
10. PROPOSED STORM INLET WITH CONCRETE APRON; REFER TO DETAIL ON SHEET C202.
11. PROPOSED TRANSFORMER PAD LOCATION
12. ADA ACCESSIBLE RAMP
13. ADA PARKING SIGN (1 VAN ACCESSIBLE REQUIRED)
14. PAINTED WHITE 4" PARKING LINES (TYP)
15. PAINTED BLUE ADA ACCESSIBLE AISLE
16. PAINTED ADA PARKING SYMBOL – (WHITE WITH BLUE BACKGROUND)
17. PAINTED CROSS WALKS
18. 24" PAINTED WHITE STOP BAR
19. STOP SIGN
20. PAINTED WHITE TRAFFIC ARROWS. REFER TO DETAIL THIS SHEET
21. CONCRETE PARKING BARRIER PER DETAIL ON SHEET C202
22. PROPOSED DUMPSTER ENCLOSURE; REFER TO ARCHITECTURAL PLANS FOR DETAILS, SHEET AC1.1
23. PAVEMENT FLUSH WITH SIDEWALK
24. PROPOSED SIDEWALK PER DETAIL ON SHEET C202
25. PROPOSED BOLLARD PER DETAIL ON SHEET C202
26. PROPOSED SIGN LOCATION
27. PROPOSED LIGHT POLE AND BASE
28. PROPOSED ROOF DRAIN. COORDINATE WITH ARCHITECTURAL DRAWINGS AND SHEET C103
29. CONCRETE STOOP. REFER TO ARCHITECTURAL DRAWINGS
30. MILL 2' AND RESURFACE PER WESTFIELD DETAILS
31. CONTRACTOR TO PROVIDE 6" MINIMUM APPROVED TOPSOIL BETWEEN BUILDING AND CURB. COORDINATE WITH ARCHITECTURAL DRAWINGS
32. 8' MULTI-USE PATH PER WESTFIELD DETAILS
33. 5' LANDING AND STAIRS. REFER TO SHEET AC1.1 FOR DETAILS.

LEGEND

FH	=	EXIST. FIRE HYDRANT
WM	=	EXIST. WATER METER/VALVE
	=	EXIST. SIGN
	=	EXIST. MONITOR WELL
PKF	=	EXIST. IRON PIN & OR PK (SET/FOUND)
GM	=	EXIST. GAS METER
	=	EXIST. GAS VALVE
	=	EXIST. STORM INLET
	=	EXIST. STORM/SAN./TELE. MANHOLE
EM	=	EXIST. ELECTRIC METER
	=	EXIST. POWER POLE/POWER POLE w/ LIGHT
GAC	=	EXIST. GUY ANCHOR
T.Ped	=	EXIST. TELEPHONE PEDESTAL
	=	HVAC UNIT
CO	=	EXIST. CLEANOUT
MB	=	MAILBOX
	=	EXIST. LIGHT
BOL	=	EXIST. BOLLARD
	=	EXIST. SANITARY SEWER LINE
	=	EXIST. STORM SEWER LINE
802	=	EXIST. CONTOURS
	=	CONCRETE END SECTION (C.E.S.)
GP	=	GATE POST
	=	TRANSFORMER
	=	RIGHT-OF-WAY LINE
	=	PROPOSED SANITARY SEWER LINE
	=	PROPOSED STORM SEWER LINE
STM	=	PROPOSED HDPE ROOF DRAIN
	=	PROPOSED PIPE BOLLARD
	=	PROPOSED MANHOLE
802	=	PROPOSED CONTOURS
894.50	=	PROPOSED ELEVATION
	=	DRAINAGE FLOW ARROW
W	=	WATER LINE
G	=	GAS LINE
F.F.E.	=	FINISH FLOOR ELEVATION
TC	=	TOP OF (MANHOLE / INLET) CASTING
INV	=	INVERT (BOTTOM) ELEVATION OF (PIPE)
RCP	=	REINFORCED CONCRETE PIPE
CMP	=	CORRUGATED METAL PIPE
CPP	=	CORRUGATED PLASTIC PIPE
PVC	=	POLYVINYL CHLORIDE PIPE
STR.	=	STRUCTURE
M.E.G.	=	MATCH EXISTING GRADE
SSD	=	SUB-SURFACE DRAINAGE
TOC	=	TOP OF CURB
GUT	=	GUTTER
OUL	=	OVERHEAD UTILITY LINE
T	=	TELEPHONE LINE
TBM	=	TEMPORARY BENCHMARK
E	=	ELECTRIC LINE
	=	CONSTRUCTION LIMITS

-PARKING SUMMARY-

PARKING REQUIREMENT: CHURCH (SF-3)
1 SPACE PER 3 SEATS (~ 370 SEATS)
PARKING REQUIRED = 124 SPACES (PHASE 1)

PARKING PROVIDED:

117 – STANDARD SPACES
8 – HANDICAP SPACES
124 – TOTAL SPACES

SCALE: 1" = 40'
0 20 40 80

Know what's **below.**
Call before you dig.
Within Indiana Call
811 or 800-382-5544
24 Hours a Day, 7 Days a Week.

PER INDIANA STATE LAW IC 8-1-26, IT IS AGAINST THE LAW TO EXCAVATE WITHOUT NOTIFYING THE UNDERGROUND LOCATION SERVICE TWO (2) WORKING DAYS BEFORE COMMENCING WORK.

10505 N. College Avenue
Indianapolis, Indiana 46280
weihe.net
317 | 846 - 6611
800 | 452 - 6408
317 | 843 - 0546 *fax*
ALLAN H. WEIHE, P.E., L.S. - FOUNDER

WEIHE ENGINEERS
Land Surveying | Civil Engineering
Landscape Architecture

PROJECT NO.	W12.0262
DWG. NAME	120262-C103 site.dwg
DESIGNED BY:	EJC/MG
DRAWN BY:	EJC/MG
CHECKED BY:	JKS
DATE:	08.28.2012

DATE	BY	REVISIONS AND ISSUES
01/20/12	EJC/MG	
8/23/12	EJC	REVISIONS PER WESTFIELD REVIEW

APPROVED BY: JAMES K. SHINNEMAN REGISTERED NO. 10200392 STATE OF INDIANA PROFESSIONAL ENGINEER
NOT VALID WITHOUT SEAL

JAMES K. SHINNEMAN P.E. 10200392

PREPARED FOR:
EPIPHANY EVANGELICAL LUTHERAN CHURCH PHASE ONE
156TH AND DITCH ROAD, WESTFIELD IN

SITE LAYOUT PLAN
Part of the SE Corner of SW1/4 of Section 10, Township 18 North, Range 3 East, Washington Township, Hamilton County, Indiana

SHEET NO.
C102

PROJECT NO.
W12.0262

LOCATION: H:\2012\W12.0262\Engineering\design\Layout\120262- C102 site.dwg
LAYOUT: C102 SITE PLAN
DATE/TIME: August 27, 2012 – 8:42am
PLOTTED BY: Carlene

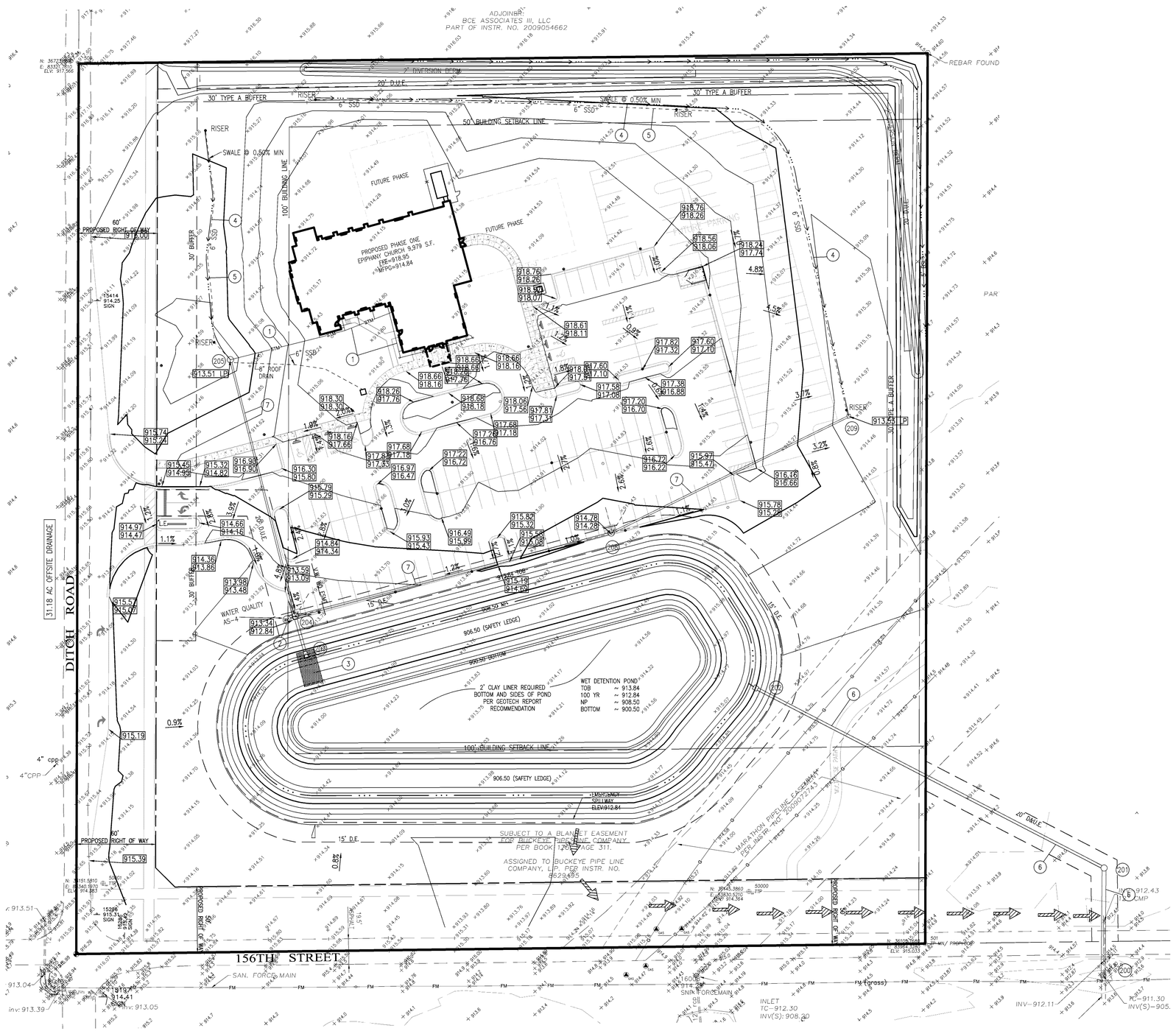

GENERAL GRADING NOTES:

1. REFER TO THE INDIANA DEPARTMENT OF TRANSPORTATION (INDOT) STANDARD SPECIFICATIONS, 1995 EDITION, FOR BASIC MATERIALS AND CONSTRUCTION METHODS. THE SECTIONS BELOW FOR VARIOUS ITEMS ARE TO CLARIFY THE INTENT OF THE REQUIREMENTS FOR THIS PROJECT. PLEASE NOTE THAT OTHER SECTIONS OF THE INDOT STANDARD SPECIFICATIONS MAY ALSO BE APPLICABLE.

2. FILL MATERIAL SHALL CONSIST OF EARTH OBTAINED FROM CUT AREAS, BORROW PITS OR OTHER APPROVED SOURCES. EARTH SHALL BE FREE FROM ORGANIC MATTER AND OTHER DELETERIOUS SUBSTANCES AND LARGE ROCKS. THE FILL MATERIAL SHALL BE PLACED IN LAYERS NOT TO EXCEED SIX INCHES FOLLOWING COMPACTION, PROPER MOISTURE CONTENT OF FILL MATERIAL WILL BE SUCH TO ACHIEVE SPECIFIED COMPACTION DENSITY. ALL FILL BENEATH PAVED AREAS, FLOOR SLABS AND FUTURE BUILDINGS SHALL BE COMPACTED TO AT LEAST 95% OF THE MAXIMUM DRY DENSITY PER ASTM D-1557. FIELD COMPACTING TEST SHALL BE RUN ON EACH LIFT, IN FILL SECTIONS, AND THE REQUIRED COMPACTION ON EACH LIFT SHALL BE IN ACCORDANCE WITH INDOT SECTION 211.

3. MAXIMUM LAWN SLOPE IS 3:1.

4. THE CONTRACTOR SHALL CONTACT ALL UTILITY COMPANIES TO LOCATE MAINS, CONDUITS, SERVICE LINES, ETC. IN THE AFFECTED CONSTRUCTION AREA. EXISTING UTILITY STRUCTURES ARE SHOWN HERE IN ACCORDANCE WITH AVAILABLE INFORMATION. THE LOCATION AND PROTECTION OF UTILITY STRUCTURES, THEIR SUPPORT AND MAINTENANCE DURING CONSTRUCTION (IN COOPERATION WITH APPLICABLE UTILITY COMPANY) IS THE EXPRESSED RESPONSIBILITY OF THE CONTRACTOR.

5. ALL SPOT ELEVATIONS ARE TO FINISHED GRADE.

6. COMPACTED "B" BORROW BACK FILL REQ'D. OVER ALL UTILITIES IN PAVED AREAS.

7. ALL GRADES AT BOUNDARY SHALL MEET EXISTING.

8. ANY PART OF SANITARY OR STORM SEWER TRENCHES RUNNING UNDER OR WITHIN 5' OF PAVEMENT TO BE BACKFILLED WITH GRANULAR MATERIAL.

9. ALL CONSTRUCTION ON THIS SITE TO BE PERFORMED IN COMPLIANCE WITH O.S.H.A. STANDARDS FOR WORKER SAFETY.

10. THE CONTRACTOR SHALL CONFIRM ALL EARTHWORK QUANTITIES PRIOR TO THE START OF CONSTRUCTION. IF AN EXCESS OR SHORTAGE OF EARTH IS ENCOUNTERED, THE CONTRACTOR SHALL CONFIRM WITH THE OWNER AND ENGINEER THE REQUIREMENTS FOR STOCKPILING, REMOVAL OR IMPORTING OF EARTH.

11. PROVIDE POSITIVE DRAINAGE WITHOUT PONDING IN ALL AREAS AFTER INSTALLATION. CONTRACTOR TO TEST FOR AND CORRECT ANY PONDING CONDITIONS.

12. VERTICAL CURVES, WITH A MINIMUM LENGTH OF 50', SHALL BE USED WHERE POSSIBLE BETWEEN VERTICAL CHANGES IN DIRECTION (SLOPE) TO ALLOW FOR POSITIVE DRAINAGE AND SMOOTH TRANSITIONS.

13. 13. CONTRACTOR TO INSTALL CONCRETE CRADLES WHEN THE VERTICAL SEPARATION (AS MEASURED FROM THE EXTERIOR OF THE PIPES) BETWEEN SANITARY SEWER FACILITIES, WATER MAIN, AND STORM SEWERS IS 18" OR LESS.

LEGEND

FH	=	EXIST. FIRE HYDRANT
WM	=	EXIST. WATER METER/VALVE
	=	EXIST. SIGN
	=	EXIST. MONITOR WELL
PKF	=	EXIST. IRON PIN & OR PK (SET/FOUND)
GM	=	EXIST. GAS METER
	=	EXIST. GAS VALVE
	=	EXIST. STORM INLET
	=	EXIST. STORM/SAN./TELE. MANHOLE
EM	=	EXIST. ELECTRIC METER
	=	EXIST. POWER POLE/POWER POLE w/ LIGHT
GA	=	EXIST. GUY ANCHOR
T.Ped	=	EXIST. TELEPHONE PEDESTAL
	=	HVAC UNIT
CO	=	EXIST. CLEANOUT
MB	=	MAILBOX
	=	EXIST. LIGHT
BOL	=	EXIST. BOLLARD
	=	EXIST. SANITARY SEWER LINE
	=	EXIST. STORM SEWER LINE
892	=	EXIST. CONTOURS
	=	CONCRETE END SECTION (C.E.S.)
GP	=	GATE POST
	=	TRANSFORMER
	=	RIGHT-OF-WAY LINE
	=	PROPOSED SANITARY SEWER LINE
	=	PROPOSED STORM SEWER LINE
STW	=	PROPOSED HDPE ROOF DRAIN
	=	PROPOSED PIPE BOLLARD
	=	PROPOSED MANHOLE
892	=	PROPOSED CONTOURS
894.50	=	PROPOSED ELEVATION
	=	DRAINAGE FLOW ARROW
W	=	WATER LINE
G	=	GAS LINE
F.F.E.	=	FINISH FLOOR ELEVATION
TC	=	TOP OF (MANHOLE / INLET) CASTING
INV	=	INVERT (BOTTOM) ELEVATION OF (PIPE)
RCP	=	REINFORCED CONCRETE PIPE
CMP	=	CORRUGATED METAL PIPE
CPP	=	CORRUGATED PLASTIC PIPE
PVC	=	POLYVINYL CHLORIDE PIPE
STR.	=	STRUCTURE
M.E.G.	=	MATCH EXISTING GRADE
SSD	=	SUB-SURFACE DRAINAGE
TOC	=	TOP OF CURB
GUT	=	GUTTER
OUL	=	OVERHEAD UTILITY LINE
T	=	TELEPHONE LINE
TBM	=	TEMPORARY BENCHMARK
E	=	ELECTRIC LINE
	=	CONSTRUCTION LIMITS
	=	EMERGENCY FLOW

EXISTING AREAS

PERVIOUS = 10.00 AC.
IMPERVIOUS = 0.00 AC.

PROPOSED AREAS

PERVIOUS = 7.87 AC.
IMPERVIOUS = 2.13 AC.

POSITIVE DRAINAGE WILL BE MAINTAINED FOR THIS SITE. NO "BIRDBATHS" OF MORE THAN 1/8" IN DEPTH SHALL BE PERMITTED. ANY AREAS THAT HOLD WATER MORE THAN 1/8" DEEP SHALL BE CUT OUT AND CORRECTED TO POSITIVE DRAINAGE AT NO COST TO THE OWNER/ DEVELOPER/ OR ENGINEER.

GRADING PLAN NOTES:

1. 8" HDPE ROOF DRAIN @ 1.0% MINIMUM
2. AQUASWIRL AS-4, REFER TO SHEET C205A
3. INSTALL RIPRAP PER WESTFIELD OUTLET DETAIL.
4. SWALE WITH SUBSURFACE DRAINAGE TILE, MIN 0.50% SLOPE
5. 6" DOUBLE WALL SSD AND RISERS PER WESTFIELD DETAILS
6. RCP STORM PIPE
7. HDPE STORM PIPE

BENCHMARK DATA:

SITE BENCHMARK–HAM 41.
DNR DISK STAMPED HAM 41 1998 ON THE NORTH SIDE OF 156TH STREET, ¼ MILE WEST OF DITCH ROAD.
ELEV – 917.54 (NAVD88)

TBM – CUT "+" ON NE BONNET BOLT OF FIRE HYDRANT AT THE SE QUADRANT OF 156TH STREET AND DITCH ROAD
ELEV – 917.10

SCALE: 1" = 40'
0 20 40 80

Know what's **below.**
Call before you dig.
Within Indiana Call
811 or 800–382–5544
24 Hours a Day, 7 Days a Week.
PER INDIANA STATE LAW IC 8-1-26, IT IS AGAINST THE LAW TO EXCAVATE WITHOUT NOTIFYING THE UNDERGROUND LOCATION SERVICE TWO (2) WORKING DAYS BEFORE COMMENCING WORK.

10505 N. College Avenue
Indianapolis, Indiana 46280
weihe.net
317 | 846 - 6611
800 | 452 - 6408
317 | 843 - 0546 *fax*
ALLAN H. WEIHE, P.E., L.S. - FOUNDER

WEIHE ENGINEERS
Land Surveying | Civil Engineering
Landscape Architecture

	DATE	BY
PROJECT NO. W12.0262		
DWG. NAME: 120262-C103 grad.dwg		
DESIGNED BY: EJC/JKS	07/26/12	EJC/JKS
DRAWN BY: EJC/MG	8/23/12	EJC
CHECKED BY: JKS		
DATE: 08/28/2012		

REVISIONS AND ISSUES
1 REVISIONS PER WESTFIELD REVIEW

JAMES K. SHINNEMAN REGISTERED NO. 10200392 STATE OF INDIANA PROFESSIONAL ENGINEER
APPROVED FOR CONSTRUCTION
NOT FOR CONSTRUCTION

JAMES K. SHINNEMAN P.E. 10200392

PREPARED FOR:
EPIPHANY EVANGELICAL LUTHERAN CHURCH PHASE ONE
156TH AND DITCH ROAD, WESTFIELD IN

GRADING AND DRAINAGE PLAN
Part of the SE Corner of SW1/4 of Section 10, Township 18 North, Range 3 East, Washington Township, Hamilton County, Indiana

SHEET NO.
C103

PROJECT NO.
W12.0262

LOCATION: H:\2012\W12.0262\Engineering\design\cover\120262-C103 grad.dwg
LAYOUT: C103 GRADING
DATE/TIME: August 24, 2012 – 12:05pm
PLOTTED BY: Carlene

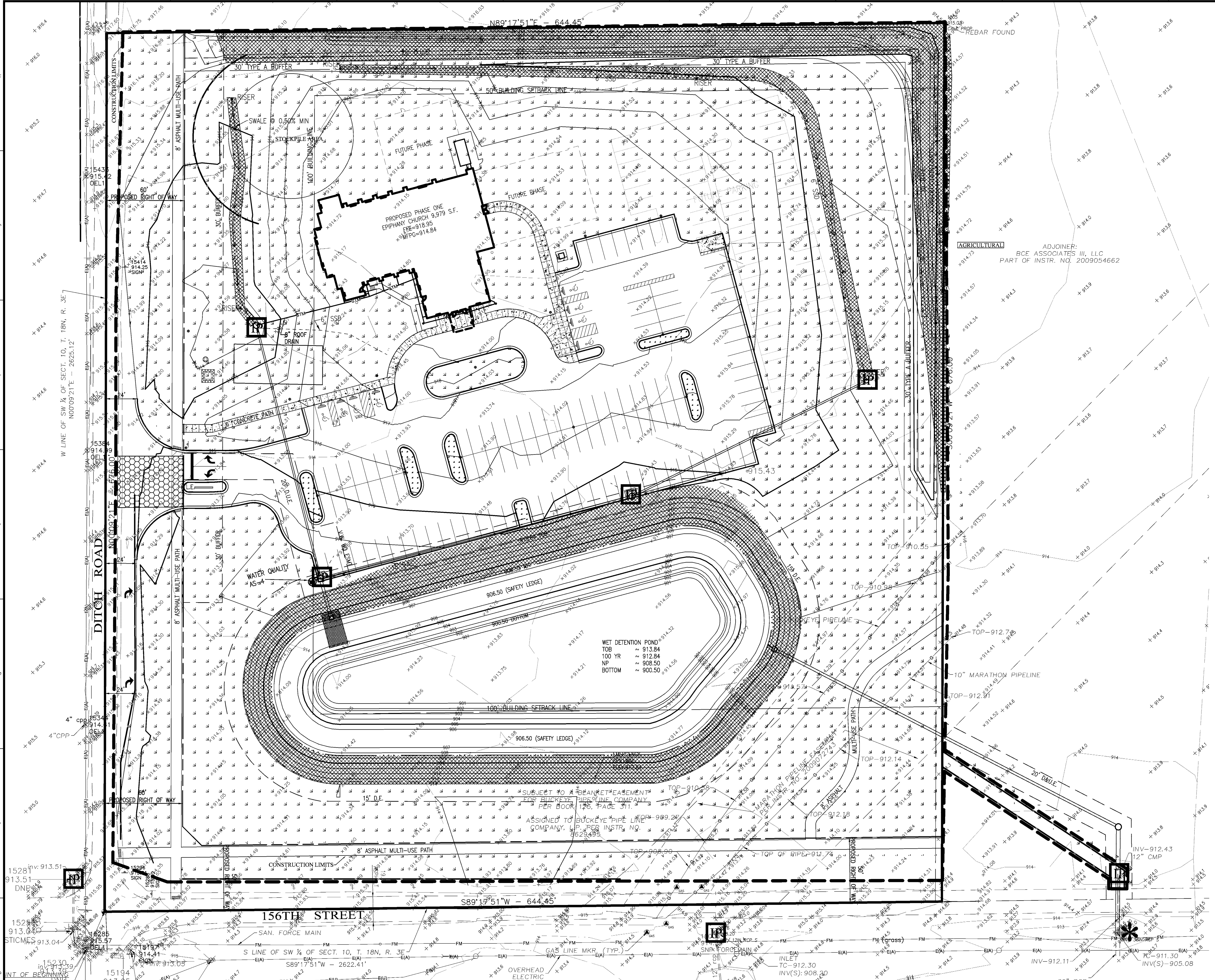

EROSION CONTROL SPECIFICATIONS:

1) THIS PLAN IS DESIGNED AS AN ATTEMPT TO PREVENT ANY AND ALL SEDIMENT FROM LEAVING THE CONSTRUCTION SITE BY WAY OF EROSION. IF EROSION OF SEDIMENT FROM THE SITE IS TAKING PLACE, THE CONTRACTOR AND/OR OWNER SHALL TAKE PREVENTATIVE ACTION IMMEDIATELY. THE ENGINEER SHALL BE CONSULTED IN THE EVENT THIS HAPPENS.
2) TEMPORARY SEEDING IS TO BE APPLIED TO ANY DISTURBED AREA THAT WILL REMAIN UNALTERED IN EXCESS OF 15 DAYS.
3) PERMANENT SEEDING IS TO BE APPLIED IMMEDIATELY TO AREAS THAT HAVE ACHIEVED FINAL AND FINISHED GRADE.
4) PRESERVE EXISTING VEGETATION ON THE SITE WHENEVER AND WHEREVER POSSIBLE TO PREVENT TOPSOIL EROSION.
5) ALL SEDIMENT CAPTURING MEASURES SHALL BE IMPLEMENTED PRIOR TO THE DISTURBANCE OF THE CONSTRUCTION AREA THEY ARE INTENDED TO SERVICE.
ALL EROSION CONTROL MEASURES PROPOSED ARE TO BE PROPERLY MAINTAINED TO CONTINUE THEIR EFFECTIVENESS.
6) IF GRADING OCCURS DURING THE MONTHS OF DECEMBER, JANUARY OR FEBRUARY DORMANT SEEDING PROCEDURES SHALL BE USED.
7) DURING DRY WEATHER, KEEP LAWNS WATERED WITH SPRINKLERS OR OTHER APPROVED METHODS. RESEED ANY AREAS NOT GERMINATING OR DAMAGED AT INTERVALS AS MAY BE REQUIRED ACCORDING TO SEASONAL CONDITION AND/OR CONSTRUCTION ACTIVITY. WATER GRASS AND EXECUTE NECESSARY WEEDING UNTIL FULL STAND OF GRASS HAS BEEN OBTAINED.
8) THE IMPLEMENTATION AND MAINTENANCE OF THE EROSION CONTROL IS THE SOLE RESPONSIBILITY OF THE CONTRACTOR AND/OR OWNER.
9) IT SHALL BE THE CONTRACTOR'S AND/OR OWNER'S RESPONSIBILITY TO MINIMIZE SEDIMENTATION (FROM ON-SITE CONSTRUCTION ACTIVITIES) FROM BEING DEPOSITED ONTO ADJACENT PROPERTIES AND RECEIVING STREAMS/DITCHES IN STRICT COMPLIANCE WITH "RULE 5" (327 IAC 15-5, CONSTRUCTION ACTIVITY STORM WATER RUNOFF CONTROL). IT SHALL ALSO BE THE CONTRACTOR'S AND/OR OWNER'S RESPONSIBILITY TO OBTAIN ANY APPROVALS REQUIRED FROM THE LOCAL AUTHORITY AND TO SUBMIT A COMPLETE NOTICE OF INTENT LETTER TO THE OFFICE OF WATER MANAGEMENT, INDIANA DEPARTMENT OF ENVIRONMENTAL MANAGEMENT PRIOR TO ANY CONSTRUCTION ACTIVITY..
10) FOR SEASONAL VARIATIONS – SEE SEASONAL SOIL PROTECTION CHART IN THESE PLANS.

LAND DESCRIPTION:

Warranty Deed Instrument No. 2012–1063

Part of the Southwest Quarter of Section 10, Township 18 North, Range 3 East, 2nd Principal Meridian, Washington Township, Hamilton County, Indiana, more particularly described as follows:

BEGINNING at the southwest corner of said Southwest Quarter; thence North 00 degrees 09 minutes 21 seconds East along the west line of said Southwest Quarter (basis of bearings is the Indiana State Plane Coordinates East Zone) 676.00 feet; thence North 89 degrees 17 minutes 51 seconds East parallel with the south line of said Southwest Quarter 644.45 feet; thence South 00 degrees 09 minutes 21 seconds West parallel with the west line of said Southwest Quarter 676.00 feet to the south line of said Southwest Quarter; thence South 89 degrees 17 minutes 51 seconds West along said south line 644.45 feet to the POINT OF BEGINNING. Containing 10.000 acres, more or less.

LEGEND

- IP – INLET PROTECTION – USE SUBSURFACE INLET PROTECTION WITH OVERFLOW CAPABILITY
- – PERMANENT SEEDING USE PLANTING CHART
- – EROSION CONTROL BLANKET – USE S150BN BIO-NET AS SUPPLIED BY NORTH AMERICAN GREEN OR APPROVED EQUAL
- – CONSTRUCTION ENTRANCE (8" OF #2 STONE ON NON-WOVEN GEOTEXTILE FABRIC)
- – STAGING AREA (SEE DETAIL)
- – POSTING AREA – 4" PVC TUBE WITH END CAPS ATTACHED TO PROJECT CONSTRUCTION SIGN TO CONTAIN APPROVED CONSTRUCTION DRAWINGS AND PERMITS FOR INSPECTORS.
- –SF– – SILT FENCE
- – CONCRETE WASHOUT
- * – SITE DISCHARGE POINT

SEASONAL SOIL PROTECTION CHART

SOIL STABILIZATION METHOD	JAN. FEB. MAR. APR. MAY JUNE JULY AUG. SEPT. OCT. NOV. DEC.
PERMANENT SEEDING	A —— */////////* —— */\/ →
DORMANT SEEDING	B → ... B →
TEMPORARY SEEDING	C → D → ; E —— *////\////* →
SODDING	F** —— *//////\//////* →
MULCHING	G →

A = KENTUCKY BLUEGRASS* 40 LBS/ACRE; CREEPING RED FESCUE 40 LBS/ACRE; PLUS 2 TONS STRAW MULCH/ACRE, OR ADD ANNUAL RYEGRASS 20 LBS/ACRE.
B = KENTUCKY BLUEGRASS* 60 LBS/ACRE; CREEPING RED FESCUE 60 LBS/ACRE; PLUS 2 TONS STRAW MULCH/ACRE, OR ADD ANNUAL RYEGRASS 30 LBS/ACRE.
C = SPRING OATS 3 BUSHEL/ACRE.
D = WHEAT OR RYE 2 BUSHEL/ACRE.
E = ANNUAL RYEGRASS 40 LBS/ACRE.
F = SOD (BLEND 3 IMPROVED VARIETIES).
G = STRAW MULCH 2 TONS/ACRE.
/\/ IRRIGATION NEEDED DURING JUNE, JULY, AND/OR SEPTEMBER.
** IRRIGATION NEEDED FOR 2 TO 3 WEEKS AFTER APPLYING SOD.
*KENTUCKY BLUEGRASS BLEND OF 3 IMPROVED VARIETIES.

-NOTE-

THIS PLAN INDICATES EROSION CONTROL MEASURES REQUIRED AFTER SOIL STRIPPING AND PAD BUILDING HAS TAKEN PLACE.

NOTE:

ALL EROSION CONTROL MATERIAL NEEDS TO BE APPROVED BY THE WPWD INSPECTORS PRIOR TO INSTALLATION

DISTURBED ACREAGE = 10.00± AC.

-WARNING-

THIS PLAN TO BE USED FOR EROSION CONTROL PURPOSES ONLY. ADDITIONAL EROSION CONTROL MEASURES MAY BE REQUIRED IN THE FIELD BY THE WPWD INSPECTOR.

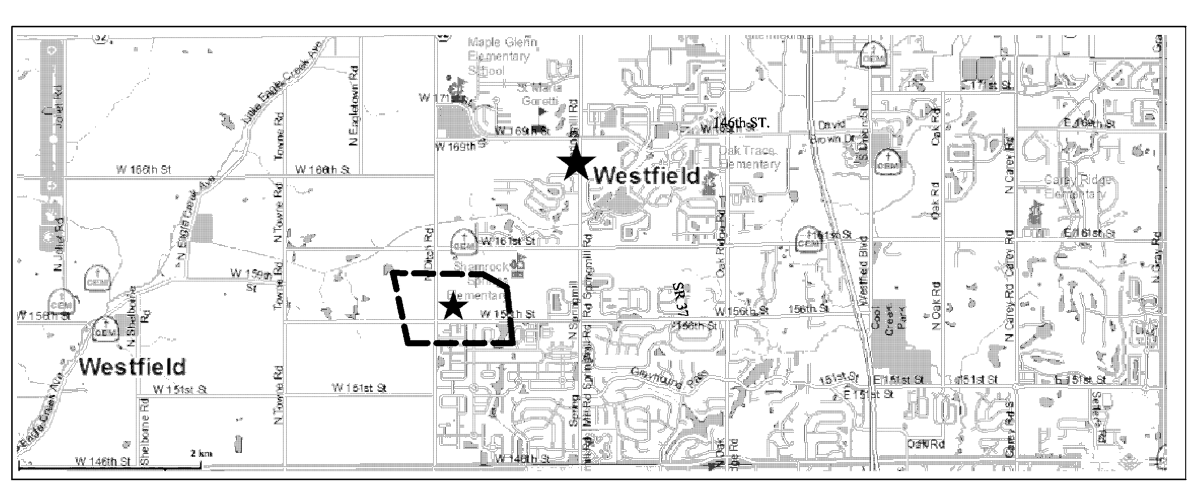

★ PROJECT LOCATION
AREA MAP

NO SCALE

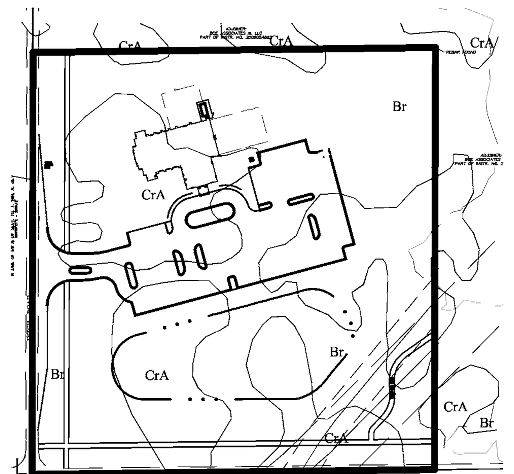

★ PROJECT LOCATION
SOILS MAP

SOILS TYPE LEGEND

Br BROOKSTON SILTY CLAY LOAM
THE MAIN SOIL FEATURES THAT ADVERSELY AFFECT ENGINEERING USES OF THIS SOIL ARE A SEASONAL HIGH WATER TABLE, HIGH POTENTIAL FROST ACTION, MODERATE SHRINK-SWELL POTENTIAL, AND MODERATE PERMEABILITY. THIS SOIL HAS SEVERE LIMITATIONS FOR BUILDING SITES. THE SITES NEED TO BE ARTIFICIALLY DRAINED AND PROTECTED FROM FLOODING. DWELLINGS AND SMALL BUILDINGS WITH BASEMENTS SHOULD NOT BE CONSTRUCTED ON THIS SOIL. USING PROPERLY DESIGNED FOUNDATIONS AND FOOTINGS HELPS TO PREVENT STRUCTURAL DAMAGE FROM FROST ACTION AND SHRINKING AND SWELLING OF THE SOIL. THIS SOIL HAS SEVERE LIMITATIONS FOR LOCAL ROADS AND STREETS BECAUSE OF SEASONAL HIGH WATER TABLE AND HIGH POTENTIAL FROST ACTION. INSTALLATION OF DRAINAGE DITCHES ALONG ROADS HELPS TO LOWER THE WATER TABLE AND PREVENT DAMAGE FROM FROST ACTION. THE BASE MATERIAL FOR ROADS AND STREETS SHOULD BE REPLACED OR STRENGTHENED WITH SUITABLE MATERIAL.

CrA CROSBY SILT LOAM
0 TO 2 PERCENT SLOPES. THE MAIN SOIL FEATURES THAT ADVERSELY AFFECT THE ENGINEERING USES OF THIS SOIL ARE A SEASONAL HIGH WATER TABLE, MODERATE SHRINK-SWELL POTENTIAL, HIGH POTENTIAL FROST ACTION, AND SLOW PERMEABILITY. THIS SOIL HAS SOME SEVERE LIMITATIONS FOR BUILDING SITES. THE SITES NEED TO BE ARTIFICIALLY DRAINED TO PREVENT WETNESS FROM BECOMING A PROBLEM. DWELLINGS AND SMALL BUILDINGS WITH BASEMENTS SHOULD NOT BE CONSTRUCTED ON THIS SOIL. USING PROPERLY DRAINED FOUNDATIONS AND FOOTINGS HELPS TO PREVENT STRUCTURAL DAMAGE FROM LOW STRENGTH AND SHRINKING AND SWELLING OF THE SOIL. THIS SOIL HAS SEVER LIMITATIONS FOR LOCAL ROADS AND STREETS. THE BASE MATERIAL FOR ROADS NEEDS TO BE STRENGTHENED OR REPLACED WITH SUITABLE MATERIAL.

EROSION CONTROL NOTES

1. ALL DISTURBED AREAS SHALL BE SODDED OR SEEDED, EXCEPT BUILDING PAD AND LANDSCAPE BEDS. SEE LANDSCAPE PLANS FOR LOCATION OF LANDSCAPE BEDS.

2. INSTALL SILT FENCE ALONG ALL PROPERTY BOUNDARIES ADJACENT TO CONSTRUCTION.

3. THERE SHALL BE NO DIRT, DEBRIS OR STORAGE OF MATERIAL IN THE STREET.

CONTACT PERSON FOR EROSION CONTROL & SEDIMENT PRACTICES

WEIHE ENGINEERS, INC.
10505 N. COLLEGE AVE.
INDIANAPOLIS, IN 46268
TELEPHONE: (317) 846-6611
FAX: (317) 843-0546
EMAIL: SHINNEMANJ@WEIHE.NET
CONTACT PERSON: JAMIE SHINNEMAN

SCALE: 1" = 40'
0 20 40 80

Know what's **below.**
Call before you dig.

Within Indiana Call
811 or 800-382-5544
24 Hours a Day, 7 Days a Week.
PER INDIANA STATE LAW IC 8-1-26. IT IS AGAINST THE LAW TO EXCAVATE WITHOUT NOTIFYING THE UNDERGROUND LOCATION SERVICE TWO (2) WORKING DAYS BEFORE COMMENCING WORK.

10505 N. College Avenue
Indianapolis, Indiana 46280
weihe.net
317 | 846 - 6611
800 | 452 - 6408
317 | 843 - 0546 *fax*
ALLAN H. WEIHE, P.E., L.S. - FOUNDER
WEIHE ENGINEERS
Land Surveying | Civil Engineering
Landscape Architecture

PROJECT NO.:	DWG NAME:	DESIGNED BY:	DRAWN BY:	CHECKED BY:	DATE:
W12.0262	120262-C104 eros.dwg	EAC/MG	EAC/MG	JKS	06.29.2012

REVISIONS AND ISSUES	DATE	BY
50% CD SET	07/26/12	EAC/MG
△ REVISIONS PER WESTFIELD REVIEW	8/23/12	EAC

JAMES K. SHINNEMAN REGISTERED NO. 10200392 STATE OF INDIANA PROFESSIONAL ENGINEER
APPROVAL PENDING NOT FOR CONSTRUCTION
JAMES K. SHINNEMAN P.E. 10200392

PREPARED FOR:
EPIPHANY EVANGELICAL LUTHERAN CHURCH PHASE ONE
156TH AND DITCH ROAD, WESTFIELD IN
SWPPP (PHASE II)
Part of the SE Corner of SW/1/4 of Section 10, Township 18 North, Range 3 East, Washington Township, Hamilton County, Indiana

SHEET NO.
C104
PROJECT NO.
W12.0262

LOCATION: H:\2012\w120262\Engineering\design\conset\120262-C104 eros.dwg
LAYOUT: C104 – SWPPP 2
DATE/TIME: August 24, 2012 – 12:05pm
PLOTTED BY: cartere

SECTION A - CONSTRUCTION PLAN ELEMENTS

A1 PLAN INDEX – SEE BELOW
A2 11"x17" PLAT – (REDUCTION OF EROSION CONTROL PLAN TO BE SUBMITTED WITH FULL SIZE PLAN)
A3 PROJECT NARRATIVE – THIS IS A PROPOSED COMMERCIAL DEVELOPMENT ON APPROXIMATELY 10.0 ACRES. THE CONSTRUCTION SHALL CONSIST OF 1 BUILDING, ASPHALT PARKING, AND 1 ENTRY DRIVES.
A4 VICINITY MAP – SEE LOWER RIGHT OF THIS SHEET C104
A5 LEGAL DESCRIPTION – SEE UPPER RIGHT OF EROSION CONTROL PLAN, LAT: 40°00'55"N LONG: 86°10'52"W
A6 LOCATION OF ALL LOTS AND PROPOSED SITE IMPROVEMENTS – SEE EROSION CONTROL PLAN C104
A7 HYDROLOGIC UNIT CODE (14 DIGIT) – 05120201090060
A8 NOTATION OF ANY STATE OR FEDERAL WATER QUALITY PERMITS – NOT APPLICABLE
A9 SPECIFIC POINTS WHERE STORMWATER DISCHARGE LEAVES SITE – SOUTHEAST CORNER OF PROPERTY, REFER TO SHEET C104.
A10 LOCATION AND NAME OF WETLANDS, LAKES AND WATER COURSES ON AND ADJACENT TO SITE – NOT APPLICABLE
A11 IDENTIFICATION OF ALL RECEIVING WATERS – LOCAL STORM PIPES INTO WILLIAMS CREEK AND EVENTUALLY THE WHITE RIVER.
A12 IDENTIFICATION OF POTENTIAL DISCHARGE TO GROUND WATER – WET POND ON SOUTHSIDE OF PARKING LOT.
A13 100 YEAR FLOODPLAINS, FLOODWAYS, AND FLOODWAY FRINGES – NOT APPLICABLE
A14 PRE–CONSTRUCTION AND POST–CONSTRUCTION ESTIMATE OF PEAK DISCHARGE (10 YEAR) – Q10pre = 12.06 cfs Q10post = 4.12 cfs
A15 ADJACENT LANDUSE INCLUDING UPSTREAM WATERSHED – SEE EROSION CONTROL PLAN C101 & C104
A16 CONSTRUCTION LIMITS – SEE EROSION CONTROL PLAN C101 & C104
A17 IDENTIFICATION OF EXISTING VEGETATIVE COVER – GRASS
A18 SOILS MAP W/ SOIL DESCRIPTIONS AND LIMITATIONS – SEE LOWER HALF OF SHEET C104
A19 LOCATIONS, SIZE & DIMENSIONS OF PROPOSED STORMWATER SYSTEMS – SEE EROSION CONTROL PLAN C104
A20 PLANS FOR OFF–SITE CONSTRUCTION ACTIVITIES – NOT APPLICABLE
A21 LOCATIONS OF PROPOSED SOIL STOCKPILES AND/OR BORROW/DISPOSAL AREAS – SEE EROSION CONTROL PLAN C104
A22 EXISTING SITE TOPOGRAPHY – SEE EROSION CONTROL PLAN C101 & C104
A23 PROPOSED FINAL TOPOGRAPHY – SEE EROSION CONTROL PLAN C104

SECTION B - SWPPP - CONSTRUCTION PHASE

B1 DESCRIPTION OF POTENTIAL POLLUTANT SOURCES – POTENTIAL POLLUTANTS FROM CONSTRUCTION ACTIVITY SUCH AS ASPHALT FROM PAVING; CONCRETE FROM CURBING, SIDEWALKS, OIL, GREASE, ANTIFREEZE, GASOLINE AND DIESEL FUEL FROM CONSTRUCTION EQUIPMENT; SOIL EROSION; FERTILIZER AND PESTICIDES FROM LANDSCAPING AND TRASH SHOULD BE PROPERLY ATTENDED TO TO REDUCE THE CONTAMINANTS FROM ENTERING THE STORM SYSTEM. TRASH SHOULD BE CLEANED UP TO REDUCE CLOGGING OF STORM SYSTEMS AND REDUCE POTENTIAL BACTERIA AND/OR OTHER BIOLOGICAL AGENTS FROM ENTERING IN THE STORM SYSTEM.
B2 SEQUENCE DESCRIBING STORMWATER QUALITY MEASURE IMPLEMENTATION RELATIVE TO LAND DISTURBING ACTIVITIES –
1. A PRE–CONSTRUCTION MEETING WITH THE CITY WESTFIELD IS REQUIRED PRIOR TO THE COMMENCEMENT OF ANY EARTHWORK. ADDITIONALLY, IDEM IS REQUIRED TO BE CONTACTED AT LEAST 48 HOURS PRIOR TO CONSTRUCTION.
2. CONSTRUCTION ENTRANCE – STRIP TOPSOIL AND PLACE STONE AT ACCESS POINT.
3. INSTALL SILT FENCING AND ALL OTHER EROSION CONTROL MEASURES PRIOR TO ANY EARTH MOVING.
4. EARTHWORK – STRIP TOPSOIL, BEGIN ROUGH GRADING AND PREPARE BUILDING PAD AND ROUGH GRADE.
5. STORM SEWER – INSTALL STORM SEWER SYSTEM AND CORRESPONDING INLET PROTECTION
6. SANITARY SEWER – INSTALL SANITARY SEWER SYSTEM
7. FINISH GRADING AND PERMANENT EROSION CONTROL – FINISH GRADE AND PERMANENTLY SEED ALL PROPERTY PERIMETER AREAS.
8. UTILITIES – COORDINATE INSTALLATION OF ALL UTILITIES.
9. PAVEMENT – INSTALL STONE, BASE COURSES AND FINISHED GRADES FOR ENTRY DRIVE.
10. CLEANUP – CONTRACTOR SHALL SPOIL ALL EXCESS MATERIALS, REGRADE AND STABILIZE ALL AREAS DISTURBED BY UTILITY INSTALLATIONS AND RESEED.
11. FINAL LANDSCAPING – INSTALL FINAL LANDSCAPING.
B3 CONSTRUCTION ENTRANCE – SEE EROSION CONTROL PLAN C104 AND SEE DETAIL IN LOWER LEFT CORNER OF PLAN
B4 SEDIMENT CONTROL PLAN FOR SHEET FLOW AREAS – SEE EROSION CONTROL PLAN C104
B5 SEDIMENT CONTROL PLAN FOR CONCENTRATED FLOW AREAS – N/A
B6 STORM SEWER INLET PROTECTION MEASURE LOCATIONS AND SPECS – SEE EROSION CONTROL PLAN C104
B7 RUNOFF CONTROL MEASURES – NOT APPLICABLE
B8 STORM WATER OUTLET PROTECTION SPECS – SEE EROSION CONTROL PLAN C104
B9 GRADE STABILIZATION STRUCTURE LOCATIONS AND SPECS – SEE EROSION CONTROL PLAN C104
B10 STORMWATER QUALITY CONSTRUCTION DETAILS – SEE EROSION CONTROL PLAN C104.
B11 TEMPORARY SURFACE STABILIZATION METHOD FOR EACH SEASON – SEE SEASONAL SOIL PROTECTION CHART
B12 PERMANENT SURFACE STABILIZATIONS – SEE SEASONAL SOIL PROTECTION CHART SHEET C104
B13 MATERIAL HANDLING AND SPILL PREVENTION PLAN – POTENTIAL POLLUTANTS FROM CONSTRUCTION ACTIVITY SUCH AS ASPHALT FROM PAVING; CONCRETE FROM CURBING, SIDEWALKS. A CONCRETE WASHOUT AREA HAS BEEN DESIGNATED OIL, GREASE, ANTIFREEZE, GASOLINE AND DIESEL FUEL FROM CONSTRUCTION EQUIPMENT. IF THERE IS A SPILL FROM ONE OF THESE, IMMEDIATE CLEANUP SHOULD OCCUR; SOIL EROSION; FERTILIZER AND PESTICIDES FROM LANDSCAPING AND TRASH SHOULD BE PROPERLY ATTENDED TO TO REDUCE THE CONTAMINANTS FROM ENTERING THE STORM SYSTEM. TRASH SHOULD BE CLEANED UP TO REDUCE CLOGGING OF STORM SYSTEMS AND REDUCE POTENTIAL BACTERIA AND/OR OTHER BIOLOGICAL AGENTS FROM ENTERING IN THE STORM SYSTEM.
SHALL MEET THE REQUIREMENTS OF IAC 2–6.1. FOLLOW MATERIAL SAFETY DATA SHEET (MSDS) GUIDELINES FOR CONTAMINANTS PRESENT ON SITE.
B14 MONITORING AND MAINTENANCE GUIDELINES FOR EACH STORMWATER QUALITY MEASURE – INSPECT ALL EROSION CONTROL AND STORMWATER QUALITY MEASURES WEEKLY AND AFTER EACH STORM EVENT OR HEAVY USE. REPAIR/REPLACE ANY COMPROMISED OR FAILED MEASURE AS REQUIRED. MORE SPECIFIC GUIDELINES ARE INCLUDED ON INDIVIDUAL DETAILS.
B15 EROSION & SEDIMENT CONTROL SPECS – N/A
B17 SEDIMENT CONTROL ASSOCIATED WITH DEWATERING AND DIRECTIONAL BORING OPERATIONS – IN THE EVENT THAT DEWATERING IS REQUIRED ON SITE, PROVIDE SEDIMENT AND OIL CONTAINMENT WITH THE USE OF THE ULTRA DEWATERING BAG, PART #9724–O/S AS PROVIDED BY ULTRATECH INTERNATIONAL, INC. AND SUPPLIED BY D2 LAND & WATER RESOURCES. REFER TO MANUFACTURER SPECIFICATIONS FOR ALTERNATE SIZES OF BAGS IF NEEDED. ALTERNATE EQUAL MEASURES OF CONTAINMENT MAY BE APPROVED BY THE ENGINEER OR EROSION CONTACT PERSON IF ANOTHER PRODUCT OR METHOD OF CONTAINMENT IS DESIRED.

SECTION C - SWPPP - POST-CONSTRUCTION PHASE

C1 DESCRIPTION OF POLLUTANTS AND THEIR SOURCES ASSOCIATED WITH THE PROPOSED LAND USE – POTENTIAL POLLUTANTS FROM POST–CONSTRUCTION ACTIVITY SUCH AS SANDS AND SALTS FROM SNOW REMOVAL; OIL, GREASE, ANTIFREEZE, ETC. FROM VEHICLES INCLUDING HEAVY METAL FROM BRAKE PAD WEAR SHOULD BE PROPERLY ATTENDED TO TO REDUCE THE CONTAMINANTS FROM ENTERING THE STORM SYSTEM. TRASH SHOULD BE CLEANED UP TO REDUCE CLOGGING OF STORM SYSTEMS AND REDUCE POTENTIAL BACTERIA AND/OR OTHER BIOLOGICAL AGENTS FROM ENTERING IN THE STORM SYSTEM. EXCESS FERTILIZERS AND HERBICIDES SHOULD BE AVOIDED. CLEAN UP IMMEDIATELY IF ANY IS SPILLED.
C2 SEQUENCE DESCRIBING STORMWATER QUALITY MEASURE IMPLEMENTATION – WATER QUALITY PROVIDED BY A AQUASWIRL UNIT SHOWN ON THE PLANS AS STORM STRUCTURE WQ1. ADDITIONAL WATER QUALITY MEASURES WILL BE IMPLEMENTED BY THE SITE OWNER AS PART OF THEIR SPILL PREVENTION, CONTROL, AND COUNTERMEASURE PLAN.
C3 DESCRIPTION OF PROPOSED POST–CONSTRUCTION STORMWATER QUALITY MEASURES – AS–4 – PRECAST CONCRETE STORMCEPTOR UNIT – TO BE INSTALLED AS STORM STRUCTURE WQ1 DURING STORM SEWER INSTALLATION. ADDITIONAL WATER QUALITY MEASURES WILL BE IMPLEMENTED BY THE SITE OWNER AS PART OF THEIR SPILL PREVENTION, CONTROL, AND COUNTERMEASURE PLAN.
C4 LOCATION, DIMENSIONS, SPECIFICATIONS, AND CONSTRUCTION DETAILS OF EACH STORM WATER QUALITY MEASURE TO BE INSTALLED AS STORM STRUCTURE DURING STORM SEWER INSTALLATION. ADDITIONAL WATER QUALITY MEASURES WILL BE IMPLEMENTED BY THE SITE OWNER AS PART OF THEIR SPILL PREVENTION, CONTROL, AND COUNTERMEASURE PLAN.
C5 DESCRIPTION OF MAINTENANCE GUIDELINES FOR POST CONSTRUCTION STORMWATER QUALITY MEASURES – MAINTENANCE GUIDELINES FOR THE UNITS ARE INDICATED IN THE O&M MANUAL PROVIDED.

SECTION 1
EMERGENCY RESPONSE NUMBERS

EMERGENCY FOR ANY LIFE THREATENING PROBLEM	911
WESTFIELD FIRE DEPARTMENT	317–804–3333
WESTFIELD POLICE DEPARTMENT	317–804–3200
INDIANA DEPT. OF NATURAL RESOURCES	812–477–8773
INDIANA DEPT. OF ENVIRONMENTAL MANAGEMENT	317–233–7745
HAMILTON COUNTY COUNTY SOIL AND WATER	317–773–1406
DIRECTOR OF COMMUNITY DEVELOPMENT	317–804–3170

SECTION 2
MATERIAL HANDLING AND SPILL PREVENTION PLAN

IN ORDER TO MINIMIZE THE RELEASE OF POTENTIAL POLLUTANTS DURING CONSTRUCTION THE CONTRACTORS SHALL IMPLEMENT THIS MATERIAL HANDLING AND SPILL PREVENTION PLAN. THE CONTRACTOR SHALL REVIEW THIS PLAN WITH ALL SUBCONTRACTORS AND REQUIRE THAT THEY IMPLEMENT THE PLAN AS WELL.

1. CONSTRUCTION EQUIPMENT

A. FUELING, LUBRICATION AND FLUIDS: ALL OPERATIONS INVOLVING THE ADDITION OF FLUIDS TO EQUIPMENT SHOULD BE DONE IN ONE LOCATION, AS DESIGNATED BY THE CONSTRUCTION MANAGER, SO THAT SPILLS ARE LIMITED TO ONE LOCATION ON THE SITE, WHICH WILL FACILITATE THE CLEANUP OF SPILLS. IF AN ONSITE–FUELING TANK IS PLANNED TO BE ON SITE, IT SHALL BE DOUBLE WALLED AND STORED IN THIS DESIGNED AREA. THIS LOCATION IS AN AREA THAT WILL NOT ALLOW SPILLED FLUIDS TO MIGRATE INTO SUBSURFACE SOILS. IN THE EVENT OF A SPILL, THE FLUID SHALL IMMEDIATELY BE CLEANED UP BY REMOVING THE CONTAMINATED SOIL OR STONE, WHICH SHALL BE DISPOSED OF IN AN ACCEPTABLE MANNER. SPILLS ON HARD SURFACES SHALL BE SOAKED UP BY AN ACCEPTABLE MATERIAL SUCH AS OIL DRY AND THE ABSORBENT MATERIAL DISPOSED OF IN A PROPER MANNER. THE SPILL SHALL ALSO BE REPORTED IMMEDIATELY TO THE CONSTRUCTION MANAGER'S SUPERINTENDENT.

B. EQUIPMENT REPAIR, ESPECIALLY WHEN FLUIDS MUST BE REMOVED FROM THE EQUIPMENT OR THE POSSIBILITY OF FLUID SPILLS IS HIGH, SHOULD ALWAYS BE DONE OFFSITE AT A FACILITY THAT IS MORE SUITABLE THAN A CONSTRUCTION SITE TO HANDLE SPILLS. WHEN EQUIPMENT MUST BE REPAIRED ONSITE IT SHOULD BE MOVED TO THE MAINTENANCE AND FUELING AREA IF POSSIBLE. OTHERWISE, SUITABLE ON SITE CONTAINERS SHOULD BE PLACED UNDER THE EQUIPMENT DURING REPAIR TO CATCH ANY SPILLED FLUIDS AND THESE FLUIDS SHOULD BE DISPOSED OF IN A PROPER MANNER.

C. ALL REUSABLE FLUID CONTAINERS, SUCH AS GASOLINE CANS, SHALL BE INSPECTED FOR LEAKS EACH TIME THEY ARE USED. IF LEAKS ARE FOUND, THE FLUID SHALL BE REMOVED FROM THE CONTAINER IN A PROPER MANNER AND THE CONTAINER DISPOSED OF IN AN ACCEPTABLE MANNER. EMPTY DISPOSABLE CONTAINER, SUCH AS GREASE TUBES AND LUBRICATING OIL AND BRAKE FLUID CONTAINERS, AND THEIR PACKAGING, SHALL BE DISPOSED OF IN A PROPER MANNER AND SHALL NOT BE LEFT ON THE GROUND OR IN THE OPEN ON THE CONSTRUCTION SITE.

2. CONSTRUCTION MATERIALS AND THEIR PACKAGING

A. EROSION CONTROL MEASURE SHOWN ON THE SUBJECT PROJECT SHALL BE IMPLEMENTED PRIOR TO AND DURING CONSTRUCTION IN THE PROPER SEQUENCING TO MINIMIZE SOIL EROSION. EROSION CONTROLS SHALL BE INSPECTED AND MAINTAINED AS DESCRIBED ELSEWHERE ON THE PLANS. EXCESSIVE DUSTING OF SOIL ON THE SITE SHALL BE MINIMIZED BY REDUCING CONSTRUCTION TRAFFIC ACROSS BARE SOIL DURING DRY AND/OR WINDY WEATHER, AND BY APPLYING WATER OR OTHER ACCEPTABLE DUST CONTROL MEASURES TO THE SOIL. UPON COMPLETION OF CONSTRUCTION AND SUITABLE ESTABLISHMENT OF PERMANENT VEGETATION, TEMPORARY EROSION CONTROL MEASURES SUCH AS SILT FENCE, CHECK DAMS AND INLET PROTECTION DEVICES SHALL BE REMOVED IN A MANNER TO MINIMIZE ADDITIONAL LAND DISTURBANCE. ANY AREAS DISTURBED BY THESE OPERATIONS SHALL BE PROPERLY REVEGATATED.

B. LARGE WASTE MATERIALS CREATED BY CUTTING, SAWING, DRILLING, OR OTHER OPERATIONS SHALL BE PROPERLY DISPOSED OF IN SUITABLE WASTE CONTAINERS. THE SITE SHALL BE CHECKED AT THE END OF THE DAY, AS A MINIMUM, AND ALL WASTE MATERIALS, INCLUDING THOSE BLOWN ACROSS OR OFF THE SITE BY WIND SHALL BE PICKED UP AND DISPOSED OF IN SUITABLE CONTAINERS. WHERE POSSIBLE, OPERATIONS SUCH AS SAWING THAT CREATE SMALL PARTICLES SHOULD BE PERFORMED IN ONE SPOT IN AN AREA PROTECTED FROM WIND, AND WASTE PARTICLES COLLECTED AND DISPOSED OF FREQUENTLY TO MINIMIZE WIND DISPERSAL. PACKAGING USED TO TRANSPORT MATERIALS TO THE SITE FOR CONSTRUCTION OF THE FACILITY SHALL BE DISPOSED OF PROPERLY, WHETHER THE MATERIAL IS TAKEN OUT OF ITS PACKAGE AND INCORPORATED INTO THE PROJECT IMMEDIATELY OR STORED ONSITE FOR FUTURE USE. PACKAGED MATERIALS STORED ONSITE SHALL BE INSPECTED REGULARLY AND ANY LOOSE PACKAGING SHALL BE REPAIRED OR DISPOSED OF PROPERLY.

C. ALL DEWATERING OF ACTIVITIES SHALL BE DONE IN ACCORDANCE TO GOOD EROSION CONTROL PRACTICES. THESE PRACTICES SHOULD INCLUDE THE USE OF DIRT BAGS SUCH AS SILT FENCE INLET PROTECTION. THE USE OF THESE TYPES OF DEWATERING DEVICES WILL REMOVE LARGE QUANTITIES OF SILT, SEDIMENT, AND DIRT AND PREVENT THESE MATERIALS TO ENTER THE STORM SEWER SYSTEM.

D. IF THE USE OF LIME IS USED TO STABILIZE THE SOIL OF THE SITE THEN ALL CONSTRUCTION EQUIPMENT USED SHALL BE CLEANED OF ALL EXCESS MATERIAL WITH WATER IN THE MAINTENANCE AND REFUELING AREA AS SHOWN WITHIN THESE PLANS.

E. NUTRIENTS AND FERTILIZERS SHALL ONLY BE USED TO ESTABLISH RAPID VEGETATION. WHEN THESE PRODUCTS ARE UTILIZED, THE USER SHOULD PAY STRICT ATTENTION TO THE PRODUCTS RECOMMENDED USAGE.

3. CONCRETE WASTE WATER

A. ALL CONCRETE WASTEWATER SHALL BE DISPOSED OF IN THE DESIGNED AREA AS DIRECTED BY THE CONSTRUCTION MANAGER. THIS AREA IS TO BE A 3' DEEP, 10' SQUARE PIT AS DETAILED ON THE EROSION CONTROL PLAN. THIS AREA SHALL BE INSPECTED ON A DAILY BASIS AT A MINIMUM. WHEN THIS AREA BECOMES FULL, THE POLLUTANTS SHALL BE EXCAVATED, PLACED IN AN ACCEPTABLE CONTAINER AND DISPOSED OF IN PROPER MANNER, BY THE EXCAVATION CONTRACTOR.

4. PAINT PRODUCTS

A. ALL EXCESS PAINT AND THEIR RELATED PRODUCTS SHALL BE DISPOSED OF IN THE MANNER AT WHICH THE MANUFACTURER SUGGESTS. UNDER NO CIRCUMSTANCES WILL PAINT OR THEIR RELATED PRODUCTS BE CLEANED OR DISPOSED OF IN SOIL, SANITARY SEWERS, STORM SEWERS OR DETENTION BASINS. ANY VIOLATION OF THIS SHALL BE REPORTED TO THE JOB SUPERINTENDENT.
IN THE EVENT OF ACCIDENTALLY CONTAMINATION ALL EFFORTS SHOULD BE MADE TO REMOVE CONTAMINANTS IN AN APPROPRIATE MANNER. THE CITY OF WESTFIELD SHOULD BE CONTACTED IMMEDIATELY TO DETERMINE IF FURTHER MEASURES ARE NEEDED.

RULE 6. SPILLS OF OIL AND OTHER OBJECTIONABLE SUBSTANCES; REPORTING, CONTAINMENT AND CLEANUP

(REPEALED BY WATER POLLUTION CONTROL BOARD; FILED FEB 25, 1997, 1:00 P.M.: 20 IR 1734)

RULE 6.1. SPILLS; REPORTING, CONTAINMENT, AND RESPONSE

327 IAC 2-6.1-1 APPLICABILITY

AUTHORITY: IC 13–14–8–7
AFFECTED: IC 13–11–2; IC 13–18–1; IC 13–18–3; IC 13–18–8; IC 13–18–17

SEC. 1. THIS RULE APPLIES TO THE REPORTING AND CONTAINMENT OF, AND THE RESPONSE TO THOSE SPILLS OF HAZARDOUS SUBSTANCES, EXTREMELY HAZARDOUS SUBSTANCES, PETROLEUM, AND OBJECTIONABLE SUBSTANCES THAT ARE OF A QUANTITY, TYPE, DURATION AND IN A LOCATION AS TO DAMAGE THE WATERS OF THE STATE. NOTHING IN THIS RULE IS INTENDED TO AFFECT REPORTING OR CLEAN–UP REQUIREMENTS SET FORTH BY OTHER FEDERAL, STATE, OR LOCAL LAWS. (WATER POLLUTION CONTROL BOARD; 327 IAC 2–6.1–1; FILED FEB 25, 1997, 1:00 P.M.: 20 IR 1731; READOPTED FILED JAN 10, 2001, 3:23 P.M.: 24 IR 1518; READOPTED FILED NOV 21, 2007, 1:16 P.M.: 20071219–IR–327070553BFA)

327 IAC 2-6.1-2 SPECIAL AREAS

AUTHORITY: IC 13–14–8–7
AFFECTED: IC 13–11–2; IC 13–18–1; IC 13–18–3; IC 13–18–8; IC 13–18–17

SEC. 2. CERTAIN AREAS OF THE STATE ARE RECOGNIZED AS HAVING UNIQUE GEOLOGY. A LARGE SECTION OF THE MID–SOUTHERN PART OF THE STATE IS A KARST REGION. PORTIONS OF SAINT JOSEPH, ELKHART, KOSCIUSKO, AND LAGRANGE COUNTIES CONTAIN A SOLE SOURCE AQUIFER AS REFERENCED IN 42 U.S.C. 300H–3(E). THE WATERS OF THE STATE ARE PARTICULARLY VULNERABLE TO DAMAGE FROM SPILLS IN THESE AREAS, AND CARE SHOULD BE EXERCISED WHEN EVALUATING DAMAGE FROM SPILLS. INFORMATION ABOUT THESE AREAS CAN BE OBTAINED BY CALLING THE DEPARTMENT OF ENVIRONMENTAL MANAGEMENT, OFFICE OF LAND QUALITY, EMERGENCY RESPONSE SECTION: AREA CODE 1–888–233–7745 FOR IN–STATE CALLS (TOLL FREE), (317) 233–7745 FOR OUT–OF–STATE CALLS. (WATER POLLUTION CONTROL BOARD; 327 IAC 2–6.1–2; FILED FEB 25, 1997, 1:00 P.M.: 20 IR 1731; READOPTED FILED JAN 10, 2001, 3:23 P.M.: 24 IR 1518; READOPTED FILED NOV 21, 2007, 1:16 P.M.: 20071219–IR–327070553BFA; ERRATA FILED MAY 27, 2008, 2:06 P.M.: 20080625–IR–327080419ACA)

327 IAC 2-6.1-3 EXCLUSIONS

AUTHORITY: IC 13–14–8–7
AFFECTED: IC 13–11–2; IC 13–18–1; IC 13–18–3; IC 13–18–8; IC 13–18–17

SEC. 3. NOTWITHSTANDING ANY OTHER SECTION OF THIS RULE, THE REPORTING REQUIREMENT OF THIS RULE DOES NOT APPLY TO THE FOLLOWING OCCURRENCES:
(1) DISCHARGES OR EXCEEDANCES THAT ARE UNDER THE JURISDICTION OF AN APPLICABLE PERMIT WHEN THE SUBSTANCE IN QUESTION IS COVERED BY THE PERMIT AND DEATH OR ACUTE INJURY OR ILLNESS TO ANIMALS OR HUMANS DOES NOT OCCUR.
(2) LAWFUL APPLICATION OF MATERIALS, INCLUDING, BUT NOT LIMITED TO:
(A) COMMERCIAL OR NATURAL FERTILIZERS AND PESTICIDES ON OR TO LAND OR WATER; OR
(B) DUST SUPPRESSION MATERIALS.
(3) THE APPLICATION OF PETROLEUM NECESSARY FOR CONSTRUCTION THAT DOES NOT DAMAGE WATERS OF THE STATE.
(4) SPILLS OF LESS THAN ONE (1) POUND OR ONE (1) PINT.
(5) SPILLS OF INTEGRAL OPERATING FLUIDS, IN THE USE OF MOTOR VEHICLES OR OTHER EQUIPMENT, THE TOTAL VOLUME OF WHICH IS LESS THAN OR EQUAL TO FIFTY–FIVE (55) GALLONS AND WHICH DO NOT DAMAGE WATERS OF THE STATE.
(6) OIL SHEENS PRODUCED AS A RESULT OF THE NORMAL OPERATION OF PROPERLY FUNCTIONING WATERCRAFT.
(7) A RELEASE OF A SUBSTANCE INTEGRAL TO A SPILL RESPONSE ACTIVITY THAT HAS BEEN APPROVED AND AUTHORIZED BY A STATE OR FEDERAL ONSCENE COORDINATOR. (WATER POLLUTION CONTROL BOARD; 327 IAC 2–6.1–3; FILED FEB 25, 1997, 1:00 P.M.: 20 IR 1731; ERRATA FILED MAR 7, 1997, 2:25 P.M.: 20 IR 1738; READOPTED FILED JAN 10, 2001, 3:23 P.M.: 24 IR 1518; READOPTED FILED NOV 21, 2007, 1:16 P.M.: 20071219–IR–327070553BFA)

327 IAC 2-6.1-4 DEFINITIONS

AUTHORITY: IC 13–14–8–7
AFFECTED: IC 13–11–2; IC 13–18–1; IC 13–18–3; IC 13–18–8; IC 13–18–17; IC 14–8–2–7; IC 14–25–7–13; IC 14–25–7–15

SEC. 4. IN ADDITION TO THE DEFINITIONS CONTAINED IN IC 13–11–2–17(D), IC 13–11–2–35(A), IC 13–11–2–51, IC 13–11–2–158(A), IC 13–11–2–160, IC 13–11–2–260, IC 13–11–2–265, AND IN 327 IAC 1, THE FOLLOWING DEFINITIONS APPLY THROUGHOUT THIS RULE:
(1) "ANIMAL" MEANS ALL MAMMALS, BIRDS, REPTILES, AMPHIBIANS, FISH, CRUSTACEANS, AND MOLLUSKS.
(2) "AQUATIC LIFE" MEANS THOSE PLANTS AND MACROINVERTEBRATES THAT ARE DEPENDENT UPON AN AQUATIC ENVIRONMENT.
(3) "CONTAIN" MEANS TO TAKE SUCH IMMEDIATE ACTION AS NECESSARY TO DAM, BLOCK, RESTRAIN, OR OTHERWISE ACT TO MOST EFFECTIVELY PREVENT A SPILL FROM ENTERING WATERS OF THE STATE OR MINIMIZE DAMAGE TO THE WATERS OF THE STATE FROM A SPILL.
(4) "DAMAGE" MEANS THE ACTUAL OR IMMINENT ALTERATION OF THE WATERS OF THE STATE SO AS TO RENDER THE WATERS HARMFUL, DETRIMENTAL, OR INJURIOUS TO:
(A) PUBLIC HEALTH, SAFETY, OR WELFARE;
(B) DOMESTIC, COMMERCIAL, INDUSTRIAL, AGRICULTURAL, OR RECREATIONAL USES; OR
(C) ANIMALS OR AQUATIC LIFE.
(5) "DOWNSTREAM WATER USER" MEANS:
(A) A COMMUNITY PUBLIC WATER SUPPLY, AS IDENTIFIED BY THE DEPARTMENT OF NATURAL RESOURCES UNDER IC 14–25–7–13(D);
(B) A SIGNIFICANT WATER WITHDRAWAL FACILITY AS REGISTERED WITH THE DEPARTMENT OF NATURAL RESOURCES UNDER IC 14–25–7–15;
(C) USERS OF RECREATIONAL WATERS; OR
(D) ANY OTHER USER MADE KNOWN TO THE PERSON WHO HAS A SPILL.
(6) "EXTREMELY HAZARDOUS SUBSTANCE" MEANS A SUBSTANCE IDENTIFIED PURSUANT TO 42 U.S.C. 11002 AND 11004. (40 CFR 355 APPENDIX A.)
(7) "FACILITY" MEANS ALL LAND, BUILDINGS, EQUIPMENT, STRUCTURES, AND OTHER STATIONARY ITEMS THAT ARE LOCATED ON A SINGLE SITE OR ON CONTIGUOUS SITES AND THAT ARE OWNED OR OPERATED BY THE SAME PERSON OR BY ANY PERSON WHO CONTROLS, IS CONTROLLED BY, OR IS UNDER COMMON CONTROL WITH, SUCH PERSON.
(8) "FACILITY BOUNDARY" MEANS THE BOUNDARY OF A FACILITY OR AN EASEMENT OR RIGHT–OF–WAY.
(9) "HAZARDOUS SUBSTANCE" HAS THE MEANING SET FORTH IN 42 U.S.C. 9601(14).
(10) "MODE OF TRANSPORTATION" INCLUDES, BUT IS NOT LIMITED TO, CARRIAGE BY:
(A) RAIL AND MOTOR VEHICLES;
(B) AIRCRAFT;
(C) WATERCRAFT;
(D) PIPELINES; OR
(E) OTHER MEANS OF TRANSPORTATION;
IN COMMERCE. THIS DEFINITION EXCLUDES CARRIAGE WITHIN A FACILITY BY TRANSPORTATION EQUIPMENT OWNED, OPERATED, OR CONTROLLED BY THAT FACILITY.
(11) "OBJECTIONABLE SUBSTANCES" MEANS SUBSTANCES THAT ARE:
(A) OF A QUANTITY AND A TYPE; AND
(B) PRESENT FOR A DURATION AND IN A LOCATION;
SO AS TO DAMAGE WATERS OF THE STATE. THIS DEFINITION EXCLUDES HAZARDOUS SUBSTANCES, EXTREMELY HAZARDOUS SUBSTANCES, PETROLEUM, AND MIXTURES THEREOF.
(12) "ON–SCENE COORDINATOR" MEANS A STATE OR FEDERAL OFFICIAL DESIGNATED BY THE DEPARTMENT, THE UNITED STATES ENVIRONMENTAL PROTECTION AGENCY, OR THE UNITED STATES COAST GUARD TO DIRECT AND COORDINATE SPECIAL SPILL RESPONSE ACTIVITIES.
(13) "RECREATIONAL WATERS" MEANS ANY WATER USED FOR:
(A) BOATING, SWIMMING, FISHING, HUNTING, TRAPPING, OR WILDLIFE VIEWING; OR
(B) PUBLIC ACCESS AREAS THAT ARE OWNED BY THE DEPARTMENT OF NATURAL RESOURCES OR THE FEDERAL GOVERNMENT; AS LISTED BY THE DEPARTMENT.
(14) "REPORTABLE QUANTITY" MEANS THE AMOUNT OF A HAZARDOUS SUBSTANCE OR EXTREMELY HAZARDOUS SUBSTANCE THAT IS REQUIRED TO BE REPORTED UNDER FEDERAL LAW UNDER 42 U.S.C. 9602(A) AND (B) AND 42 U.S.C. 9603(A). (40 CFR 302.4 OR 40 CFR 355 APPENDIX A.) (15) "SPILL" MEANS ANY UNEXPECTED, UNINTENDED, ABNORMAL, OR UNAPPROVED DUMPING, LEAKAGE, DRAINAGE, SEEPAGE, DISCHARGE OR OTHER LOSS OF PETROLEUM, HAZARDOUS SUBSTANCES, EXTREMELY HAZARDOUS SUBSTANCES, OR OBJECTIONABLE SUBSTANCES. THE TERM DOES NOT INCLUDE RELEASES TO IMPERMEABLE SURFACES WHEN THE SUBSTANCE DOES NOT MIGRATE OFF THE SURFACE OR PENETRATE THE SURFACE AND ENTER THE SOIL.
(16) "SPILL RESPONSE", FOR PURPOSES OF THIS RULE, MEANS THE FOLLOWING:
(A) THE SPILL IS CONTAINED; AND
(B) FREE MATERIAL IS REMOVED OR NEUTRALIZED.
(17) "SPILL REPORT" MEANS AN ORAL REPORT THAT INCLUDES THE FOLLOWING INFORMATION ABOUT A SPILL, TO THE EXTENT THAT THE INFORMATION IS KNOWN AT THE TIME OF THE REPORT:
(A) THE NAME, ADDRESS, AND TELEPHONE NUMBER OF THE PERSON MAKING THE SPILL REPORT.
(B) THE NAME, ADDRESS, AND TELEPHONE NUMBER OF A CONTACT PERSON IF DIFFERENT FROM CLAUSE (A).
(C) THE LOCATION OF THE SPILL.
(D) THE TIME OF THE SPILL.
(E) THE IDENTIFICATION OF THE SUBSTANCE SPILLED.
(F) THE APPROXIMATE QUANTITY OF THE SUBSTANCE THAT HAS BEEN OR MAY FURTHER BE SPILLED.
(G) THE DURATION OF THE SPILL.
(H) THE SOURCE OF THE SPILL.
(I) NAME AND LOCATION OF THE WATERS DAMAGED.
(J) THE IDENTITY OF ANY RESPONSE ORGANIZATION RESPONDING TO THE SPILL.
(K) WHAT MEASURES HAVE BEEN OR WILL BE UNDERTAKEN TO PERFORM A SPILL RESPONSE.
(L) ANY OTHER INFORMATION THAT MAY BE SIGNIFICANT TO THE RESPONSE ACTION.
(18) "WATERS", AS DEFINED IN IC 13–11–2–265, MEANS THE ACCUMULATIONS OF WATER, SURFACE AND UNDERGROUND, NATURAL AND ARTIFICIAL, PUBLIC AND PRIVATE, OR PARTS THEREOF, THAT ARE WHOLLY OR PARTIALLY WITHIN, FLOW THROUGH, OR BORDER UPON THIS STATE. THE TERM DOES NOT INCLUDE ANY PRIVATE POND OR ANY OFF–STREAM POND, RESERVOIR, OR FACILITY BUILT FOR REDUCTION OR CONTROL OF POLLUTION OR COOLING OF WATER PRIOR TO DISCHARGE UNLESS THE DISCHARGE FROM THE POND, RESERVOIR, OR FACILITY CAUSES OR THREATENS TO CAUSE WATER POLLUTION. (WATER POLLUTION CONTROL BOARD; 327 IAC 2–6.1–4; FILED FEB 25, 1997, 1:00 P.M.: 20 IR 1731; ERRATA FILED MAR 7, 1997, 2:25 P.M.: 20 IR 1738; READOPTED FILED JAN 10, 2001, 3:23 P.M.: 24 IR 1518; READOPTED FILED NOV 21, 2007, 1:16 P.M.: 20071219–IR–327070553BFA)

327 IAC 2-6.1-5 REPORTABLE SPILLS; FACILITY

AUTHORITY: IC 13–14–8–7
AFFECTED: IC 13–11–2; IC 13–18–1; IC 13–18–3; IC 13–18–8; IC 13–18–17

SEC. 5. THE FOLLOWING SPILLS FROM A FACILITY MUST BE REPORTED:
(1) SPILLS THAT DAMAGE THE WATERS OF THE STATE SO AS TO CAUSE DEATH OR ACUTE INJURY OR ILLNESS TO HUMANS OR ANIMALS.
(2) SPILLS FROM A FACILITY THAT HAS BEEN NOTIFIED IN WRITING BY A WATER UTILITY THAT IT IS LOCATED IN A DELINEATED PUBLIC WATER SUPPLY WELLHEAD PROTECTION AREA AS APPROVED BY THE DEPARTMENT UNDER 327 IAC 8–4.1 THAT ARE:
(A) SPILLS OF HAZARDOUS SUBSTANCES OR EXTREMELY HAZARDOUS SUBSTANCES WHEN THE AMOUNT SPILLED EXCEEDS ONE HUNDRED (100) POUNDS OR THE REPORTABLE QUANTITY, WHICHEVER IS LESS;
(B) SPILLS OF PETROLEUM WHEN THE AMOUNT SPILLED EXCEEDS FIFTY–FIVE (55) GALLONS; OR
(C) SPILLS OF OBJECTIONABLE SUBSTANCES AS DEFINED IN SECTION 4(11) OF THIS RULE.
(3) SPILLS THAT DAMAGE WATERS OF THE STATE AND THAT:
(A) ARE LOCATED WITHIN FIFTY (50) FEET OF A KNOWN PRIVATE DRINKING WATER WELL LOCATED BEYOND THE FACILITY PROPERTY BOUNDARY; OR
(B) ARE LOCATED WITHIN ONE HUNDRED (100) YARDS OF:
(I) ANY HIGH QUALITY WATER DESIGNATED AS AN OUTSTANDING STATE RESOURCE PURSUANT TO 327 IAC 2–1–2(3), EXCLUDING LAKE MICHIGAN;
(II) ANY WATER DESIGNATED AS EXCEPTIONAL USE PURSUANT TO 327 IAC 2–13(A)(6) [SIC., 327 IAC 2–1–3(A)(6)] AND 327 IAC 2–1–11(B);
(III) ANY WATER DESIGNATED AS CAPABLE OF SUPPORTING A SALMONID FISHERY PURSUANT TO 327 IAC 2–1–6(C)(1), EXCEPT LAKE MICHIGAN; OR
(IV) ANY WATER THAT IS A FISH HATCHERY, FISH AND WILDLIFE AREA, NATURE PRESERVE, OR RECREATIONAL WATER OWNED BY THE DEPARTMENT OF NATURAL RESOURCES OR THE FEDERAL GOVERNMENT.
(4) FOR ANY SPILL WHICH DOES NOT MEET THE CRITERIA IN SUBDIVISIONS (1) THROUGH (3), THE FOLLOWING MUST BE REPORTED:
(A) SPILLS TO SURFACE WATERS:
(I) SPILLS OF HAZARDOUS SUBSTANCES OR EXTREMELY HAZARDOUS SUBSTANCES WHEN THE AMOUNT SPILLED EXCEEDS ONE HUNDRED (100) POUNDS OR THE REPORTABLE QUANTITY, WHICHEVER IS LESS;
(II) SPILLS OF PETROLEUM OF SUCH QUANTITY AS TO CAUSE A SHEEN UPON THE WATERS; OR
(III) SPILLS OF OBJECTIONABLE SUBSTANCES AS DEFINED IN SECTION 4(11) OF THIS RULE.
(B) SPILLS TO SOIL BEYOND THE FACILITY BOUNDARY:
(I) SPILLS OF HAZARDOUS SUBSTANCES OR EXTREMELY HAZARDOUS SUBSTANCES WHEN THE AMOUNT SPILLED EXCEEDS ONE HUNDRED (100) POUNDS OR THE REPORTABLE QUANTITY, WHICHEVER IS LESS;
(II) SPILLS OF PETROLEUM WHEN THE AMOUNT SPILLED EXCEEDS FIFTY–FIVE (55) GALLONS; OR
(III) SPILLS OF OBJECTIONABLE SUBSTANCES AS DEFINED IN SECTION 4(11) OF THIS RULE.
(C) SPILLS TO SOIL WITHIN THE FACILITY BOUNDARY:
(I) SPILLS OF HAZARDOUS SUBSTANCES OR EXTREMELY HAZARDOUS SUBSTANCES WHEN THE AMOUNT SPILLED EXCEEDS THE REPORTABLE QUANTITY;
(II) SPILLS OF PETROLEUM WHEN THE SPILLED AMOUNT EXCEEDS ONE THOUSAND (1,000) GALLONS; OR
(III) SPILLS OF OBJECTIONABLE SUBSTANCES AS DEFINED IN SECTION 4(11) OF THIS RULE.
(5) ANY SPILL FOR WHICH A SPILL RESPONSE HAS NOT BEEN DONE. (WATER POLLUTION CONTROL BOARD; 327 IAC 2–6.1–5; FILED FEB 25, 1997, 1:00 P.M.: 20 IR 1732; ERRATA FILED MAR 7, 1997, 2:25 P.M.: 20 IR 1738; READOPTED FILED JAN 10, 2001, 3:23 P.M.: 24 IR 1518; READOPTED FILED NOV 21, 2007, 1:16 P.M.: 20071219–IR–327070553BFA)

327 IAC 2-6.1-6 REPORTABLE SPILLS; TRANSPORTATION

AUTHORITY: IC 13–14–8–7
AFFECTED: IC 13–11–2; IC 13–18–1; IC 13–18–3; IC 13–18–8; IC 13–18–17

SEC. 6. THE FOLLOWING SPILLS FROM A MODE OF TRANSPORTATION MUST BE REPORTED:
(1) SPILLS THAT DAMAGE THE WATERS OF THE STATE SO AS TO CAUSE DEATH OR ACUTE INJURY OR ILLNESS TO HUMANS OR ANIMALS.
(2) SPILLS THAT DAMAGE SURFACE WATERS.
(3) SPILLS TO SOIL:
(A) SPILLS OF HAZARDOUS SUBSTANCES OR EXTREMELY HAZARDOUS SUBSTANCES WHEN THE AMOUNT SPILLED EXCEEDS ONE HUNDRED (100) POUNDS OR THE REPORTABLE QUANTITY, WHICHEVER IS LESS;
(B) SPILLS OF PETROLEUM WHEN THE AMOUNT SPILLED EXCEEDS FIFTY–FIVE (55) GALLONS; OR
C) SPILLS OF OBJECTIONABLE SUBSTANCES AS DEFINED IN SECTION 4(11) OF THIS RULE.
(4) ANY SPILL FOR WHICH A SPILL RESPONSE HAS NOT BEEN DONE. (WATER POLLUTION CONTROL BOARD; 327 IAC 2–6.1–6; FILED FEB 25, 1997, 1:00 P.M.: 20 IR 1733; READOPTED FILED JAN 10, 2001, 3:23 P.M.: 24 IR 1518; READOPTED FILED NOV 21, 2007, 1:16 P.M.: 20071219–IR–327070553BFA)

327 IAC 2-6.1-7 REPORTABLE SPILLS; RESPONSIBILITIES

AUTHORITY: IC 13–14–8–7
AFFECTED: IC 13–11–2; IC 13–18–1; IC 13–18–3; IC 13–18–8; IC 13–18–17

SEC. 7. ANY PERSON WHO OPERATES, CONTROLS, OR MAINTAINS ANY MODE OF TRANSPORTATION OR FACILITY FROM WHICH A SPILL OCCURS SHALL, UPON DISCOVERY OF A REPORTABLE SPILL TO THE SOIL OR SURFACE WATERS OF THE STATE, DO THE FOLLOWING:
(1) CONTAIN THE SPILL, IF POSSIBLE, TO PREVENT ADDITIONAL SPILLED MATERIAL FROM ENTERING THE WATERS OF THE STATE.
(2) UNDERTAKE OR CAUSE OTHERS TO UNDERTAKE ACTIVITIES NEEDED TO ACCOMPLISH A SPILL RESPONSE.
(3) AS SOON AS POSSIBLE, BUT WITHIN TWO (2) HOURS OF DISCOVERY, COMMUNICATE A SPILL REPORT TO THE DEPARTMENT OF ENVIRONMENTAL MANAGEMENT, OFFICE OF LAND QUALITY, EMERGENCY RESPONSE SECTION: AREA CODE 1–888–233–7745 FOR IN–STATE CALLS (TOLL FREE), (317) 233–7745 FOR OUT–OF–STATE CALLS. IF NEW OR UPDATED SPILL REPORT INFORMATION BECOMES KNOWN THAT INDICATES A SIGNIFICANT INCREASE IN THE LIKELIHOOD OF DAMAGE TO THE WATERS OF THE STATE, THE RESPONSIBLE PARTY SHALL NOTIFY THE DEPARTMENT AS SOON AS POSSIBLE BUT WITHIN TWO (2) HOURS OF THE TIME THE NEW OR UPDATED INFORMATION BECOMES KNOWN.
(4) SUBMIT TO THE INDIANA DEPARTMENT OF ENVIRONMENTAL MANAGEMENT, OFFICE OF LAND QUALITY, EMERGENCY RESPONSE SECTION (MC 66–30), 2525 N. SHADELAND AVE., SUITE 100, INDIANAPOLIS, IN 46219–1787, A WRITTEN COPY OF THE SPILL REPORT IF REQUESTED IN WRITING BY THE DEPARTMENT.
(5) EXCEPT FROM MODES OF TRANSPORTATION OTHER THAN PIPELINES, EXERCISE DUE DILIGENCE AND DOCUMENT ATTEMPTS TO NOTIFY THE FOLLOWING:
(A) FOR SPILLS TO SURFACE WATER THAT CAUSE DAMAGE, THE NEAREST AFFECTED DOWNSTREAM WATER USER LOCATED WITHIN TEN (10) MILES OF THE SPILL AND IN THE STATE OF INDIANA; AND
(B) FOR SPILLS TO SOIL OUTSIDE THE FACILITY BOUNDARY, THE AFFECTED PROPERTY OWNER OR OWNERS, OPERATOR OR OPERATORS, OR OCCUPANT OR OCCUPANTS. (WATER POLLUTION CONTROL BOARD; 327 IAC 2–6.1–7; FILED FEB 25, 1997, 1:00 P.M.: 20 IR 1733; READOPTED FILED JAN 10, 2001, 3:23 P.M.: 24 IR 1518; ERRATA FILED FEB 6, 2006, 11:15 A.M.: 29 IR 1936; ERRATA FILED OCT 20, 2006, 10:08 A.M.: 20061101–IR–327060497ACA; READOPTED FILED NOV 21, 2007, 1:16 P.M.: 20071219–IR–327070553BFA; ERRATA FILED MAY 27, 2008, 2:06 P.M.: 20080625–IR–327080419ACA)

327 IAC 2-6.1-8 EMERGENCY SPILL RESPONSE ACTIONS

AUTHORITY: IC 13–14–8–7
AFFECTED: IC 13–11–2; IC 13–18–1; IC 13–18–3; IC 13–18–8; IC 13–18–17

SEC. 8. NOTWITHSTANDING ANY OTHER SECTION OF THIS RULE, EMERGENCY SPILL RESPONSE ACTIONS TAKE PRECEDENCE OVER REPORTING REQUIREMENTS, AND WHEN EMERGENCY SPILL RESPONSE ACTIVITIES RENDER SPILL REPORTING INCONSISTENT WITH EFFECTIVE RESPONSE ACTIVITIES, COMMUNICATION OF THE SPILL REPORT TO THE INDIANA DEPARTMENT OF ENVIRONMENTAL MANAGEMENT MAY BE DELAYED. IN SITUATIONS WHERE THE SPILL REPORT IS DELAYED, THE BURDEN OF PROVING THE NEED FOR THE DELAY SHALL BE UPON THE RESPONSIBLE PERSON. (WATER POLLUTION CONTROL BOARD; 327 IAC 2–6.1–8; FILED FEB 25, 1997, 1:00 P.M.: 20 IR 1734; READOPTED FILED JAN 10, 2001, 3:23 P.M.: 24 IR 1518; READOPTED FILED NOV 21, 2007, 1:16 P.M.: 20071219–IR–327070553BFA)

327 IAC 2-6.1-9 COMPLIANCE CONFIRMATION

AUTHORITY: IC 13–14–8–7
AFFECTED: IC 13–11–2; IC 13–18–1; IC 13–18–3; IC 13–18–8; IC 13–18–17

SEC. 9. WHEN SPILL REPORTING AND RESPONSE, AS PROVIDED FOR IN THIS RULE, HAS OCCURRED, THE DEPARTMENT SHALL, UPON REQUEST, ISSUE A LETTER CONFIRMING COMPLIANCE WITH THIS RULE AND STATING THAT NO FURTHER ACTION IS REQUIRED UNDER THIS RULE. (WATER POLLUTION CONTROL BOARD; 327 IAC 2–6.1–9; FILED FEB 25, 1997, 1:00 P.M.: 20 IR 1734; READOPTED FILED JAN 10, 2001, 3:23 P.M.: 24 IR 1518; READOPTED FILED NOV 21, 2007, 1:16 P.M.: 20071219–IR–327070553BFA)

SCALE: 1" = 40'
0 20 40 80

Know what's **below.**
Call before you dig.
Within Indiana Call
811 or 800–382–5544
24 Hours a Day, 7 Days a Week.
PER INDIANA STATE LAW IC 8–1–26. IT IS AGAINST THE LAW TO EXCAVATE WITHOUT NOTIFYING THE UNDERGROUND LOCATION SERVICE TWO (2) WORKING DAYS BEFORE COMMENCING WORK.

10505 N. College Avenue
Indianapolis, Indiana 46280
weihe.net
317 | 846 - 6611
800 | 452 - 6408
317 | 843 - 0546 *fax*
ALLAN H. WEIHE, P.E., L.S. - FOUNDER

WEIHE ENGINEERS
Land Surveying | Civil Engineering
Landscape Architecture

PROJECT NO.:	W12.0262
DWG NAME:	120262–C104 eros.dwg
DESIGNED BY:	EAC/MG
DRAWN BY:	EAC/MG
CHECKED BY:	JKS
DATE:	06.29.2012

DATE	BY	REVISIONS AND ISSUES
07/26/12	EAC/MG	50% CD SET
8/23/12	EAC	REVISIONS PER WESTFIELD REVIEW

JAMES K. SHINNEMAN REGISTERED NO. 10200392 STATE OF INDIANA PROFESSIONAL ENGINEER
APPROVAL PENDING NOT FOR CONSTRUCTION

JAMES K. SHINNEMAN P.E. 10200392

PREPARED FOR:
EPIPHANY EVANGELICAL LUTHERAN CHURCH PHASE ONE
156TH AND DITCH ROAD, WESTFIELD IN
SWPPP (PHASE II) SPECIFICATIONS
Part of the SE Corner of SW/1/4 of Section 10, Township 18 North, Range 3 East, Washington Township, Hamilton County, Indiana

SHEET NO.
C104a

PROJECT NO.
W12.0262

LOCATION: H:\2012\w120262\Engineering\design\conset\120262–C104 eros.dwg
LAYOUT: C104A – SWPPP 2 SPECS
DATE/TIME: August 24, 2012 – 12:05pm
PLOTTED BY: cartere

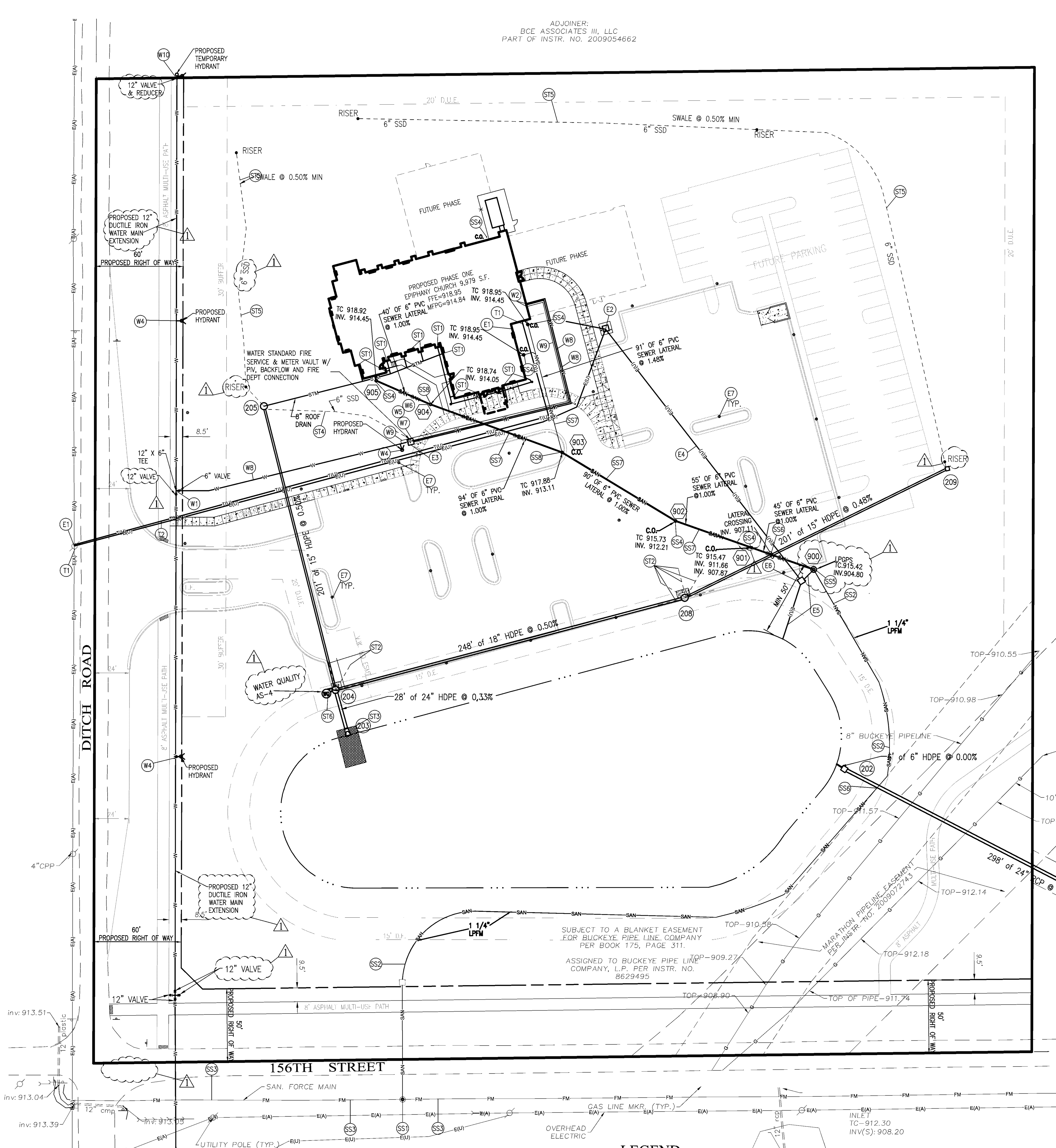

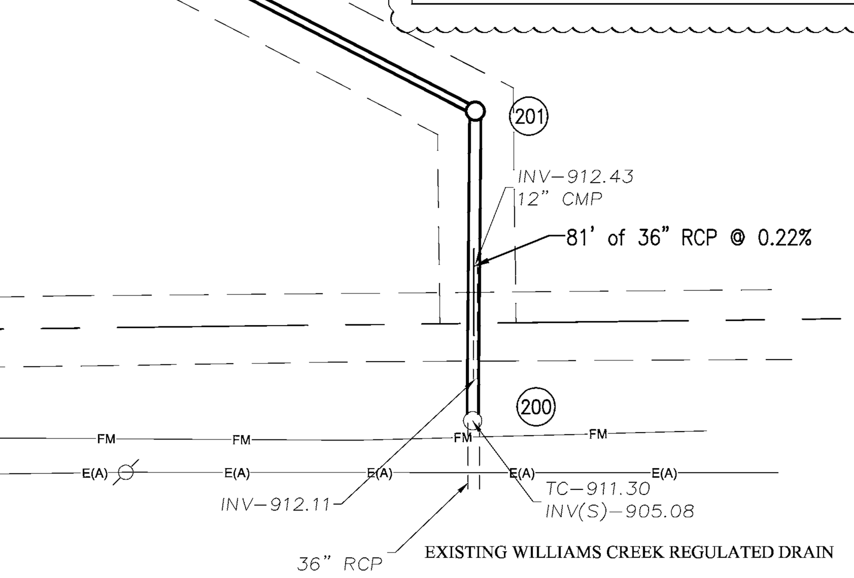

UTILITY PLAN NOTES:

SANITARY SEWER NOTES:

- (SS1) CONNECT PROPOSED 1½ SANITARY SEWER LPFM TO EXISTING SANITARY SEWER FORCEMAIN. COORDINATE CONNECTION WITH MEP. PROVIDE CLEANOUTS AS REQUIRED/SHOWN. VERIFY INVERTS ON EXISTING LINE AND COORDINATE CONDITIONS WITH MEP. ADJUST AS REQUIRED
- (SS2) PROPOSED SANITARY FORCEMAIN
- (SS3) EXISTING SANITARY FORCEMAIN
- (SS4) PROPOSED SANITARY LATERAL CLEANOUT TYPE 2. REFER TO DETAIL ON SHEET C205.
- (SS5) SANITARY GRINDER PUMP
- (SS6) PROVIDE 18" MINIMUM VERTICAL CLEARANCE BETWEEN SANITARY/STORM SEWER PIPES AND ALL OTHER PIPES. INSTALL CONCRETE CRADLE IF CLEARANCE IS LESS THAN 18"
- (SS7) PROPOSED 6" SANITARY SEWER LATERAL
- (SS8) PROPOSED SANITARY LATERAL CLEANOUT TYPE 3. REFER TO DETAIL ON SHEET C205.

SITE WATER SERVICE NOTES:

- (W1) COORDINATE AND CONNECT 6" WATER SERVICE LINE TO PROPOSED 12" WATER MAIN
- (W2) COORDINATE CONNECTION OF 2" TYPE-K COPPER SERVICE LINE AND 6" FIRE LINE WITH PLUMBING DRAWINGS.
- (W3) EXISTING FIRE HYDRANT W/ VALVE
- (W4) PROPOSED FIRE HYDRANT.
- (W5) PROPOSED POST INDICATOR VALVE
- (W6) FIRE DEPARTMENT CONNECTION (5" STORZ CONNECTION).
- (W7) PROPOSED WATER BACKFLOW
- (W8) PROPOSED 6" PVC FIRE SERVICE LINE
- (W9) PROPOSED 2" DOMESTIC SERVICE LINE
- (W10) TEMPORARY FIRE HYDRANT W/ VALVE

STORM SEWER NOTES:

- (ST1) CONNECT DOWNSPOUTS TO 8" HDPE ROOF DRAINS AT 0.50% MINIMUM
- (ST2) 4" SPIDER DRAINS
- (ST3) RIP-RAP WITH NON-WOVEN FILTER FABRIC PER WESTFIELD DETAILS
- (ST4) PROVIDE 6" DOUBLE WALL SSD TO SUMP IN VAULT
- (ST5) 6" DOUBLE WALLED SSD W/ RISERS EVERY 300'
- (ST6) AS-4 AQUASWIRL

SITE ELECTRIC NOTES:

- (E1) COORDINATE AND CONNECT BUILDING ELECTRICAL LINE TO ELECTRICAL TRANSFORMER. COORDINATE CONNECTION WITH POWER COMPANY AND ELECTRICAL DRAWINGS. ADJUST AS REQUIRED. 2-4" PVC CONDUITS TO BE INSTALLED WITH PULL STRINGS. 1-120/208V 3PH 225 AMP, 1-120/208V, 3 PHASE, 1200 AMP REQUIRED. SEE THE MECHANICAL, ELECTRICAL, AND PLUMBING SYSTEMS SCHEMATIC DESIGN NARRATIVE FOR EPIPHANY LUTHERAN CHURCH FOR FURTHER DETAILS
- (E2) PROPOSED TRANSFORMER PAD LOCATION.
- (E3) PROVIDE ELECTRIC SERVICE TO WATER VAULT FOR SUMP
- (E4) PROVIDE ELECTRIC SERVICE TO DISCONNECT SWITCH
- (E5) PROVIDE ELECTRIC SERVICE TO GRINDER PUMP AND POND FOUNTAIN
- (E6) ELECTRIC DISCONNECT SWITCH
- (E7) PROVIDE ELECTRIC TO LIGHT POLES, CONDUIT AS NEEDED.

SITE TELEPHONE NOTES:

- (T1) COORDINATE AND CONNECT BUILDING TELEPHONE SERVICE LINE TO CONNECTION POINT AS PROVIDED. COORDINATE CONNECTION WITH SITE DRAWINGS AND SERVICE PROVIDER FOR RELOCATION OF PEDESTAL. ADJUST AS REQUIRED. 4" PVC CONDUIT TO BE INSTALLED WITH PULL STRINGS. CONTRACTOR TO PROVIDE #6 GROUND WIRE AT THE D-MARC LOCATION. 7 LINES ANTICIPATED FOR SERVICE. (4 PHONE, 1 FA, 1 SECURITY AND 1 FAX/MODEM)
- (T2) PROPOSED PEDESTAL LOCATION. COORDINATE WITH SERVICE PROVIDER.

SITE GAS SERVICE NOTES:

- (G1) CONNECT PROPOSED GAS SERVICE TO EXISTING GAS LINE. REFER TO ARCHITECTURAL DRAWINGS AND COORDINATE WITH SERVICE PROVIDER.

SITE CABLE SERVICE NOTES:

- (C1) PROVIDE 2" CAPPED PVC CONDUIT FOR CABLE SERVICE CONNECTION. COORDINATE CONNECTION WITH SITE DRAWINGS. ADJUST AS REQUIRED. CONDUIT TO BE INSTALLED WITH PULL STRINGS.

GENERAL NOTES:

1) THE CONTRACTOR SHALL CONTACT ALL APPLICABLE UTILITIES AND VERIFY ANY AND ALL FEES ASSOCIATED WITH THE INSTALLATION OF ALL UTILITIES.
2) PROVIDE THRUST BLOCKS FOR ALL WATER LINE BENDS AND TEES, INCLUDING TAP CONNECTION.
3) CONTRACTOR SHALL COORDINATE WITH WATER COMPANY FOR DOMESTIC AND FIRE SERVICE. CONNECT TO BUILDING DOMESTIC AND FIRE LINE. COORDINATE WITH PLUMBING DRAWINGS.
4) COORDINATE LOCATION OF ELECTRICAL AND TELEPHONE LINES WITH LOCAL UTILITIES.
5) COORDINATE LOCATION AND SIZE OF GAS SERVICE CONNECTION AND INSTALLATION OF SERVICE LINE AND METER WITH GAS COMPANY.
6) COORDINATE LOCATIONS AND CONNECTIONS OF BUILDING STORM LINES WITH MECHANICAL DRAWINGS.
7) VERIFY EXISTING INVERT AND LOCATION OF SANITARY SEWER. ADJUST INVERTS AS REQUIRED. DOCUMENT ANY CHANGES.
8) MAINTAIN 10' HORIZONTAL AND 18" VERTICAL CLEARANCE BETWEEN STORM / SANITARY SEWER SYSTEMS AND DOMESTIC/FIRE LINE SERVICE.
9) FOLLOW ALL LOCAL AND STATE CODES IN REFERENCE TO DOMESTIC/FIRE LINE INSTALLATION AND STORM SEWER / SANITARY SEWER INSTALLATION.
10) COORDINATE LOCATION OF REQUIRED CONDUITS FOR LIGHT POLES, TELEPHONE SERVICE AND IRRIGATION SYSTEM.
11) COORDINATE UTILITY CONDUITS WITH SERVICE PROVIDERS.
12) SANITARY SEWER LATERAL, WATER SERVICE, & ELECTRICAL/TELEPHONE CONDUITS SHALL BE GRANULAR BACKFILL FOR ENTIRE RUN.

BUCKEYE PARTNERS RIGHT OF WAY RESTRICTIONS DATED 03/2012
WHEN ANY CONSTRUCTION ACTIVITY IS CONDUCTED IN OR AROUND OUR PIPELINE RIGHT-OF-WAY, BUCKEYE'S ON-SITE INSPECTOR MUST BE PRESENT AT ALL TIMES. NO WORK SHALL TAKE PLACE WITHOUT A BUCKEYE ON-SITE INSPECTOR PRESENT. FOR THIS FREE-OF-CHARGE SERVICE, CONTACT OUR LOCAL FIELD OPERATIONS MANAGER AT THE BUCKEYE FACILITY NEAREST TO YOUR PROPOSED PROJECT.

GENERAL REQUIREMENTS FOR ROADS, DRIVEWAYS SIDEWALKS AND PARKING AREAS:

A. ROADS, DRIVEWAYS, SIDEWALKS, OR PARKING AREAS SHALL NOT BE CONSTRUCTED ACROSS THE RIGHT-OF-WAY WITHOUT BUCKEYE'S WRITTEN APPROVAL. UPON BUCKEYE'S APPROVAL, ROADS, DRIVEWAYS, AND SIDEWALKS SHALL CROSS PERPENDICULAR TO THE PIPELINE.
B. THE MAXIMUM ALLOWABLE COVER SHALL NOT EXCEED SIX (6) FEET WITHOUT BUCKEYE'S WRITTEN APPROVAL.
C. USE OF VIBRATORY EQUIPMENT LARGER THAN WALK-BEHIND UNITS IS NOT PERMITTED WITHIN 25 FEET OF THE PIPELINE.
D. ROADS OR DRIVEWAYS SHALL NOT BE INSTALLED LONGITUDINALLY WITHIN THE RIGHT-OF-WAY.
E. FOR ROADS AND DRIVEWAYS, A MINIMUM COVER OF 48 INCHES WITH A NET COVER OF 36 INCHES OF UNDISTURBED SOIL IS REQUIRED ABOVE THE PIPELINE.
F. A MINIMUM COVER OF 36 INCHES OVER THE PIPELINE IS REQUIRED AT ROAD DRAINAGE DITCHES. UPON BUCKEYE'S APPROVAL, THIS COVER CAN BE REDUCED TO 24 INCHES IF DITCH IS ROCK/RIP-RAP LINED AND 12 INCHES IF DITCH IS CONCRETE LINED.
G. FOR ASPHALT PARKING LOTS AND SIDEWALKS, A MINIMUM COVER OF 36 INCHES WITH A NET COVER OF 24 INCHES OF UNDISTURBED SOIL IS REQUIRED ABOVE THE PIPELINE. ADDITIONAL COVER MAY BE REQUIRED BY BUCKEYE BASED UPON SPECIFIC SITE CONDITIONS.

UTILITIES:

A. UTILITIES SHALL CROSS PERPENDICULAR TO THE PIPELINE.
B. UTILITIES ARE REQUIRED TO CROSS BENEATH THE PIPELINE WITH A MINIMUM CLEARANCE OF 24 INCHES. EXCEPTIONS TO BUCKEYE'S CLEARANCE REQUIREMENTS FOR UNDERGROUND SERVICE ENTRANCES TO SINGLE FAMILY DWELLINGS WILL BE REVIEWED ON A CASE-BY-CASE BASIS.
C. SAND OR SELECT FILL SHALL BE PLACED BETWEEN THE PIPELINE AND UTILITY (SEE SECTION 2.8).
D. UTILITIES INSTALLED PARALLEL TO THE PIPELINE SHALL BE REVIEWED BY BUCKEYE ON A CASE-BY-CASE BASIS. IF APPROVED, THE UTILITY SHALL BE NO CLOSER THAN 15 FEET FROM THE PIPELINE.
E. WARNING TAPE, IN ACCORDANCE WITH A.P.W.A. UNIFORM COLOR CODE, SHALL BE PLACED ABOVE UTILITY, 12 INCHES BELOW GROUND, FOR A DISTANCE OF 25 FEET ON EITHER SIDE OF CROSSING.
F. SIGNAGE SHALL BE PLACED AT CROSSING AS DETERMINED APPROPRIATE BY BUCKEYE.
G. TRENCHLESS EXCAVATIONS:
   [1] UTILITIES INSTALLED BY A TRENCHLESS EXCAVATION METHOD (DIRECTIONAL DRILLING, JACKING, SLICK BORING, ETC.) SHALL BE REVIEWED BY BUCKEYE ON A CASE-BY-CASE BASIS.
   [2] BUCKEYE RESERVES THE RIGHT TO SELECT THE METHOD OF CROSSING FOR THE PROPOSED UTILITY.
   [3] A MINIMUM CLEARANCE OF 60 INCHES (5 FEET) BELOW THE PIPELINE IS REQUIRED.
   [4] FOR DIRECTIONAL DRILLING OPERATIONS, A SURFACE WIRE TRACKING SYSTEM IS REQUIRED TO VERIFY THE EXACT LOCATION OF THE DRILL HEAD.
   [5] A 4 FEET BY 4 FEET EXCAVATION WINDOW, 24 INCHES BELOW THE PIPELINE IS REQUIRED FOR VISUAL INSPECTION OF THE PIPELINE TO ENSURE THE DRILL (OR BORE) DOES NOT IMPACT THE PIPELINE.
   [6] BLIND BORING IS NOT PERMITTED WITHIN BUCKEYE'S RIGHT-OF-WAY.

-NOTE-
RUN WATER LINE A MINIMUM OF 54" DEEP.
PROVIDE MINIMUM OF 10' HORIZONTAL & 2' VERTICAL CLEARANCE BETWEEN WATER & SANITARY LINE. SANITARY SEWER LINE IN PROXIMITY OF WATER LINE SHALL BE C900 WATER MAIN GRADE PVC.

STORM SEWER STRUCTURE DATA TABLE

STRUCTURE NUMBER	STRUCTURE TYPE	TOP OF CASTING	CASTING TYPE	INVERT
203	CES	911.00	N/A	1 Pipe - (204) INV IN = 908.50(N)
204	MANHOLE WITH WQ DIVERSION	913.34	NEENAH R-3286-8V	3 Pipe - (205) INV IN = 908.69(N) Pipe - (208) INV IN = 908.69(E) Pipe - (204) INV OUT = 908.59(S)
205	MANHOLE	913.51	BEEHIVE	1 Pipe - (205) INV OUT = 909.70(S)
208	MANHOLE	914.78	NEENAH R-3286-8V	2 Pipe - (209) INV IN = 910.03(NE) Pipe - (208) INV OUT = 909.93(W)
209	INLET TYPE A	913.53	BEEHIVE	1 Pipe - (209) INV OUT = 911.00(SW)

-NOTE-
STR. 200 TO 201 WILL BE INSPECTED BY HCSO INSPECTORS, ALONG WITH THE CITY OF WESTFIELD INSPECTORS, AND MUST BE CONSTRUCTED TO HCSO STANDARDS

-NOTE-
PRIVATE TILES ARE LIKELY TO BE ENCOUNTERED DURING THIS PROJECT AND WILL NEED TO BE CONNECTED TO THE STORM SEWER SYSTEM WITH A POSITIVE OUTLET

STORM SEWER STRUCTURE DATA TABLE

STRUCTURE NUMBER	STRUCTURE TYPE	TOP OF CASTING	CASTING TYPE	INVERT
200	MANHOLE	911.30	SOLID	1 Pipe - (201) INV IN = 905.08(N)
201	MANHOLE	913.00	BEEHIVE	2 Pipe - (202) INV IN = 905.36(NW) Pipe - (201) INV OUT = 905.26(S)
202	OUTLET CONTROL	911.86	CUSTOM GRATE	2 Pipe - (203) INV IN = 908.50(NW) Pipe - (202) INV OUT = 906.60(SE)

STORM SEWER PIPE DATA TABLE

DOWNSTREAM STRUCTURE	UPSTREAM STRUCTURE	SIZE	LENGTH	SLOPE
203	204	24"	27.69'	0.33%
204	205	15"	200.93'	0.50%
208	204	18"	248.06'	0.50%
209	208	15"	201.03'	0.48%

STORM SEWER PIPE DATA TABLE

DOWNSTREAM STRUCTURE	UPSTREAM STRUCTURE	SIZE	LENGTH	SLOPE
	202	6"	6.35'	0.00%
201	200	36"	81.43'	0.22%
202	201	24"	297.74'	0.42%

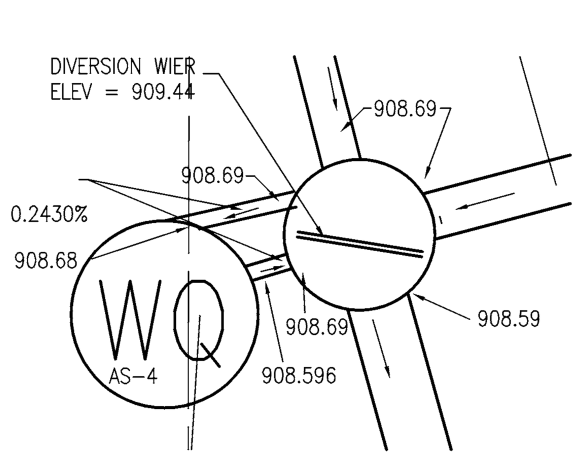

LEGEND

- = EXIST. FIRE HYDRANT
- = EXIST. WATER METER/VALVE
- = EXIST. SIGN
- = EXIST. MONITOR WELL
- = EXIST. IRON PIN & OR PK (SET/FOUND)
- = EXIST. GAS METER
- = EXIST. GAS VALVE
- = EXIST. STORM INLET
- = EXIST. STORM/SAN./TELE. MANHOLE
- = EXIST. ELECTRIC METER
- = EXIST. POWER POLE/POWER POLE w/ LIGHT
- = EXIST. GUY ANCHOR
- = EXIST. TELEPHONE PEDESTAL
- = HVAC UNIT
- = EXIST. CLEANOUT
- = MAILBOX
- = EXIST. LIGHT
- = EXIST. BOLLARD
- = EXIST. SANITARY SEWER LINE
- = EXIST. STORM SEWER LINE
- = EXIST. CONTOURS
- = CONCRETE END SECTION (C.E.S.)
- = GATE POST
- = TRANSFORMER
- = RIGHT-OF-WAY LINE
- = PROPOSED SANITARY SEWER LINE
- = PROPOSED STORM SEWER LINE
- STM = PROPOSED HDPE ROOF DRAIN
- = PROPOSED PIPE BOLLARD
- = PROPOSED MANHOLE
- 892 = PROPOSED CONTOURS
- 894.50 = PROPOSED ELEVATION
- = DRAINAGE FLOW ARROW
- W = WATER LINE
- G = GAS LINE
- F.F.E. = FINISH FLOOR ELEVATION
- TC = TOP OF (MANHOLE / INLET) CASTING
- INV = INVERT (BOTTOM) ELEVATION OF (PIPE)
- RCP = REINFORCED CONCRETE PIPE
- CMP = CORRUGATED METAL PIPE
- CPP = CORRUGATED PLASTIC PIPE
- PVC = POLYVINYL CHLORIDE PIPE
- STR. = STRUCTURE
- M.E.G. = MATCH EXISTING GRADE
- SSD = SUB-SURFACE DRAINAGE
- TOC = TOP OF CURB
- GUT = GUTTER
- OUL = OVERHEAD UTILITY LINE
- T = TELEPHONE LINE
- TBM = TEMPORARY BENCHMARK
- E = ELECTRIC LINE
- = CONSTRUCTION LIMITS

SCALE: 1" = 40'
0 20 40 80

Know what's below. Call before you dig.
Within Indiana Call
811 or 800-382-5544
24 Hours a Day, 7 Days a Week.
PER INDIANA STATE LAW IC 8-1-26. IT IS AGAINST THE LAW TO EXCAVATE WITHOUT NOTIFYING THE UNDERGROUND LOCATION SERVICE TWO (2) WORKING DAYS BEFORE COMMENCING WORK.

10505 N. College Avenue
Indianapolis, Indiana 46280
weihe.net
317 | 846 - 6611
800 | 452 - 6408
317 | 843 - 0546 fax
ALLAN H. WEIHE, P.E., L.S. - FOUNDER
WEIHE ENGINEERS
Land Surveying | Civil Engineering
Landscape Architecture

PROJECT NO.: W12.0262
DWG NAME: 120262-C105 util.dwg
DESIGNED BY: EAC/MG
DRAWN BY: EAC/MG
CHECKED BY: JKS
DATE: 06.29.2012

DATE	BY	REVISIONS AND ISSUES
07/26/12	EAC/MG	50% CD SET
8/23/12	EAC	REVISIONS PER WESTFIELD REVIEW

JAMES K. SHINNEMAN REGISTERED NO. 10200392 STATE OF INDIANA PROFESSIONAL ENGINEER
APPROVAL PENDING NOT FOR CONSTRUCTION
JAMES K. SHINNEMAN P.E. 10200392

PREPARED FOR:
EPIPHANY EVANGELICAL LUTHERAN CHURCH PHASE ONE
156TH AND DITCH ROAD, WESTFIELD IN
UTILITY PLAN
Part of the SE Corner of SW/1/4 of Section 10, Township 18 North, Range 3 East, Washington Township, Hamilton County, Indiana

SHEET NO.
C105
PROJECT NO.
W12.0262

LOCATION: H:\2012\w120262\Engineering\design\conset\120262-C105 util.dwg
LAYOUT: C105 - UTILITY PLAN
DATE/TIME: August 27, 2012 - 8:51am
PLOTTED BY: cartere

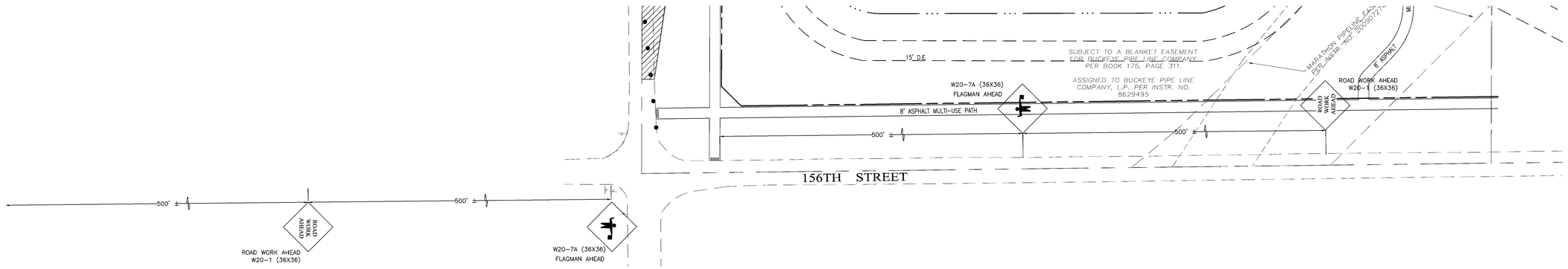

156TH STREET TRAFFIC PLAN

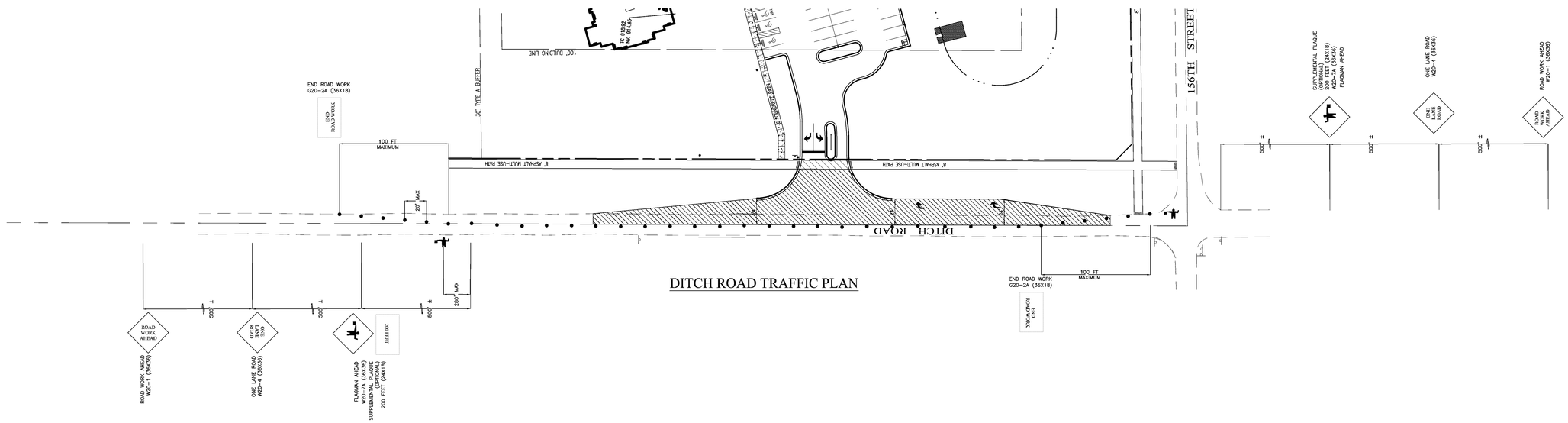

DITCH ROAD TRAFFIC PLAN

MAINTENANCE OF TRAFFIC NOTES

DURING THE COURSE OF CONSTRUCTION, ONE LANE REDUCTION WILL BE ALLOWED BETWEEN THE HOURS OF 9am. AND 4pm. CONSTRUCTION MUST BE COMPLETE WITHIN 5 DAYS AND THE LANE MUST BE REOPENED AT THE END OF EACH DAY THAT IT IS CLOSED.

THE BARRRICADES SHALL BE MOVED TO THE EDGE OF PAVEMENT AT TIMES OF NO CONSTRUCTION TO ALLOW FOR UNOBSTRUCTED TRAFFIC FLOW THROUGH THE CONSTRUCTION AREA.

FENCING AND BARRICADES SHALL BE PLACED SO AS TO ENCOMPASS ANY EXPOSED TRENCH AREA AT TIMES OF NO CONSTRUCTION.

THE ROAD WORK AHEAD SIGN SHALL ALSO BE COVERED OR TURNED AWAY FROM THE ROADWAY AT TIMES OF NO CONSTRUCTION.

THE MAINTENANCE OF TRAFFIC SHALL CONFORM TO THE STANDARD SPECIFICATIONS OF THE INDIANA DEPARTMENT OF TRANSPORTATION STANDARD DETOUR SHEETS AND THE INDIANA MANUAL ON UNIFORM TRAFFIC CONTROL DEVICES FOR STREETS AND HIGHWAYS DATED 2003 AND ALL SUBSEQUENT REVISIONS.

ANY DROP OFF ADJACENT TO THE TRAVEL LANE WHICH EXCEEDS 4" MUST HAVE TYPE II DRUMS WITH TYPE 'A' FLASHERS SPACED EVERY 100'

LEGEND

- = DRUM TYPE BARRICADES (INDOT SPEC. 801.09) SPACED AS NOTED WITH TYPE "C" STEADY BURN LIGHTS.
- = ADVANCED WARNING SIGN
- = WORK AREA
- = FLAGGER
- = OPTIONAL PLAQUE

SIGNAGE SCHEDULE

- 4 – W20-7A (36x36) "FLAGMAN AHEAD"
- 2 – W20-4 (36x36) "ONE LANE ROAD 525 FEET"
- 4 – W20-1 (36x36) "ROAD WORK AHEAD"
- 35 – DRUM TYPE BARRICADES (INDOT SPEC. 801.09) SPACED AS NOTED WITH TYPE "C" STEADY BURN LIGHTS
- 2 – G20-2A (36x18) "END ROAD WORK"
- 2 – FLAGGERS

NOTES:

STAGING AND EQUIPMENT STORAGE WILL OCCUR ON WORK SITE.

Know what's **below.** **Call** before you dig.

Within Indiana Call
811 or 800-382-5544
24 Hours a Day, 7 Days a Week.

PER INDIANA STATE LAW IC 8-1-26, IT IS AGAINST THE LAW TO EXCAVATE WITHOUT NOTIFYING THE UNDERGROUND LOCATION SERVICE TWO (2) WORKING DAYS BEFORE COMMENCING WORK.

10505 N. College Avenue
Indianapolis, Indiana 46280
weihe.net
317 | 846 - 6611
800 | 452 - 6408
317 | 843 - 0546 *fax*
ALLAN H. WEIHE, P.E., L.S. - FOUNDER

WEIHE ENGINEERS
Land Surveying | Civil Engineering
Landscape Architecture

PROJECT NO.	W12.0262
DWG. NAME:	120262-C106 trof.dwg
DESIGNED BY:	EJC/JKG
DRAWN BY:	EJC/JKG
CHECKED BY:	JKS
DATE:	08.28.2012

DATE	BY	REVISIONS AND ISSUES
01/09/12	EJC/JKG	ISSUED FOR REVIEW
8/23/12	JAC	REVISIONS PER WESTFIELD REVIEW

REGISTERED PROFESSIONAL ENGINEER JAMES K. SHINNEMAN 10200392 STATE OF INDIANA
APPROVED FOR CONSTRUCTION
NOT APPROVED FOR CONSTRUCTION

JAMES K. SHINNEMAN P.E. 10200392

PREPARED FOR:
EPIPHANY EVANGELICAL LUTHERAN CHURCH PHASE ONE
156TH AND DITCH ROAD, WESTFIELD IN

MAINTENANCE OF TRAFFIC PLAN
Part of the SE Corner of SW1/4 of Section 10, Township 18 North, Range 3 East, Washington Township, Hamilton County, Indiana

SHEET NO.
C106

PROJECT NO.
W12.0262

LOCATION: H:\2012\w120262\Engineering\design\cover\\120262- C106 trof.dwg
LAYOUT: C106 - MAINTENANCE
DATE/TIME: August 24, 2012 – 12:06pm
PLOTTED BY: Carlene

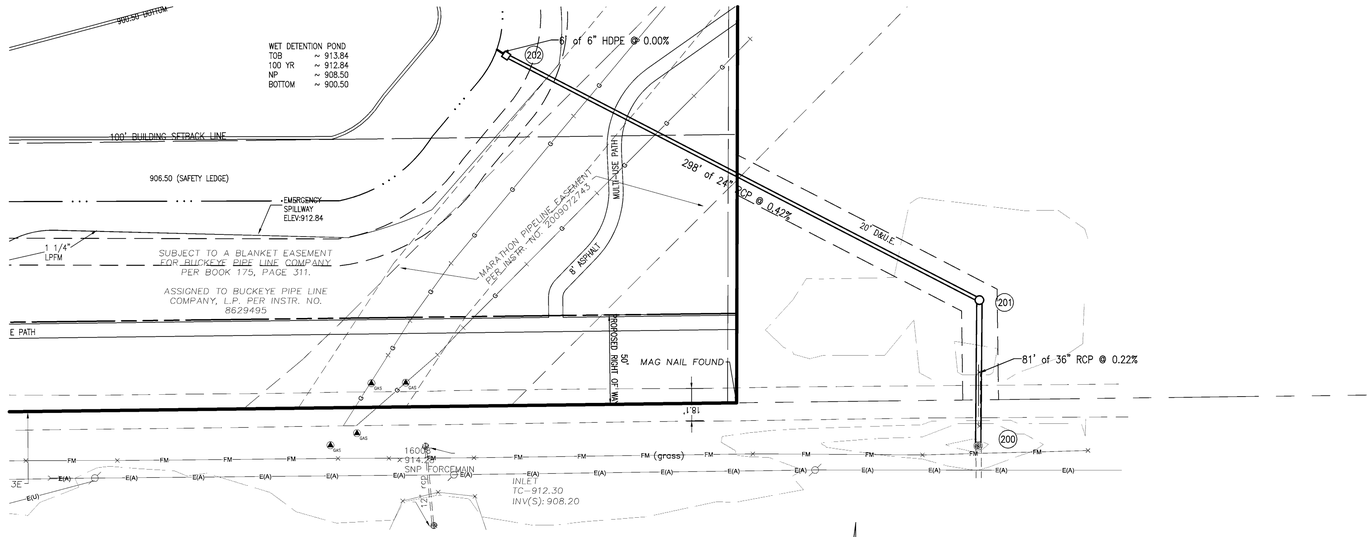

VERTICAL SCALE 1" = 4'

HORIZONTAL SCALE: SCALE: 1" = 40'

STORM OUTFALL (200-202)

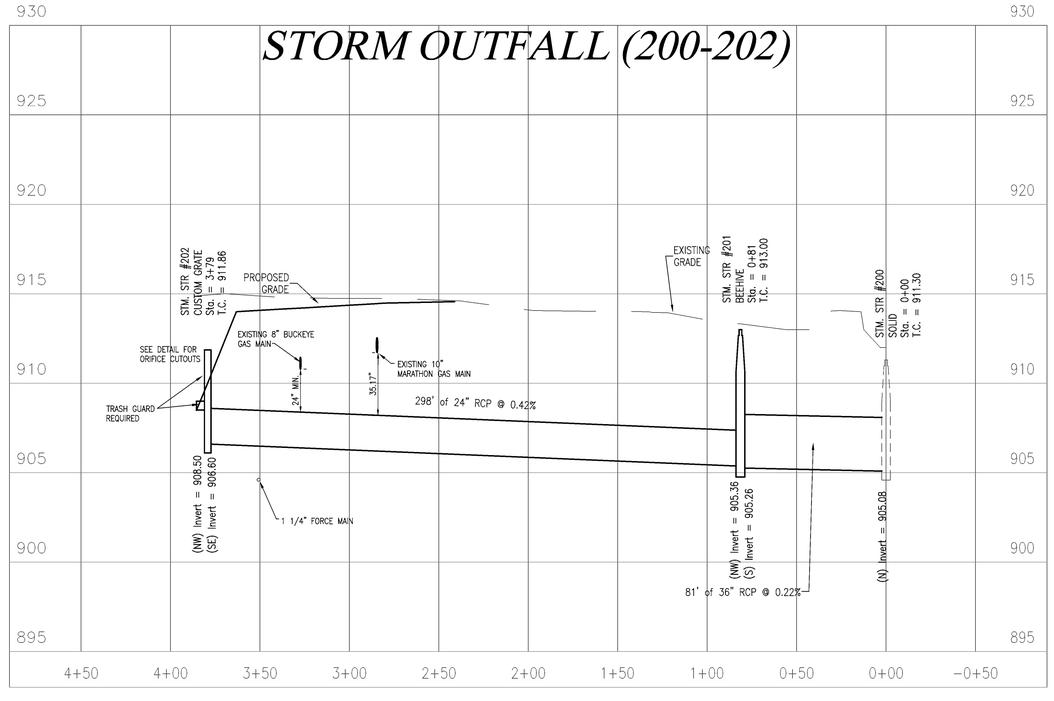

-NOTE-
STRUCTURES DEEPER THAN 4' MUST BE ACCESSIBLE WITH STEPS

Know what's **below.** **Call** before you dig.
Within Indiana Call
811 or 800-382-5544
24 Hours a Day, 7 Days a Week.

PER INDIANA STATE LAW IC 8-1-26, IT IS AGAINST THE LAW TO EXCAVATE WITHOUT NOTIFYING THE UNDERGROUND LOCATION SERVICE TWO (2) WORKING DAYS BEFORE COMMENCING WORK.

10505 N. College Avenue
Indianapolis, Indiana 46280
weihe.net
317 | 846 - 6611
800 | 452 - 6408
317 | 843 - 0546 *fax*
ALLAN H. WEIHE, P.E., L.S. - FOUNDER

WEIHE ENGINEERS
Land Surveying | Civil Engineering
Landscape Architecture

DATE:	BY:	PROJECT NO:
07/27/12	EAC/MG	W12.0262
8/23/12	EAC	DWG. NAME:
		L:\2012\W12\0262\Engineering\
		DESIGNED BY: EAC/MG
		DRAWN BY: EAC/MG
		CHECKED BY: JKS
		DATE: 08.28.2012

REVISIONS AND ISSUES
DATE ISSUE
08/28/12 REVISIONS PER WESTFIELD REVIEW

JAMES K. SHINNEMAN
REGISTERED
10200392
STATE OF INDIANA
PROFESSIONAL ENGINEER
NOT FOR CONSTRUCTION UNLESS SIGNED

JAMES K. SHINNEMAN P.E. 10200392

PREPARED FOR:
EPIPHANY EVANGELICAL LUTHERAN CHURCH PHASE ONE
156TH AND DITCH ROAD, WESTFIELD IN

STORM SEWER PLAN AND PROFILE
Part of the SE Corner of SW1/4 of Section 10, Township 18 North, Range 3 East, Washington Township, Hamilton County, Indiana

SHEET NO.
C107

PROJECT NO.
W12.0262

LOCATION: H:\2012\w12\0262\Engineering\design\civil\12\0262-C107 prp.dwg
LAYOUT: C107 - STORM PLAN
DATE/TIME: August 24, 2012 - 1:24pm
PLOTTED BY: carlene

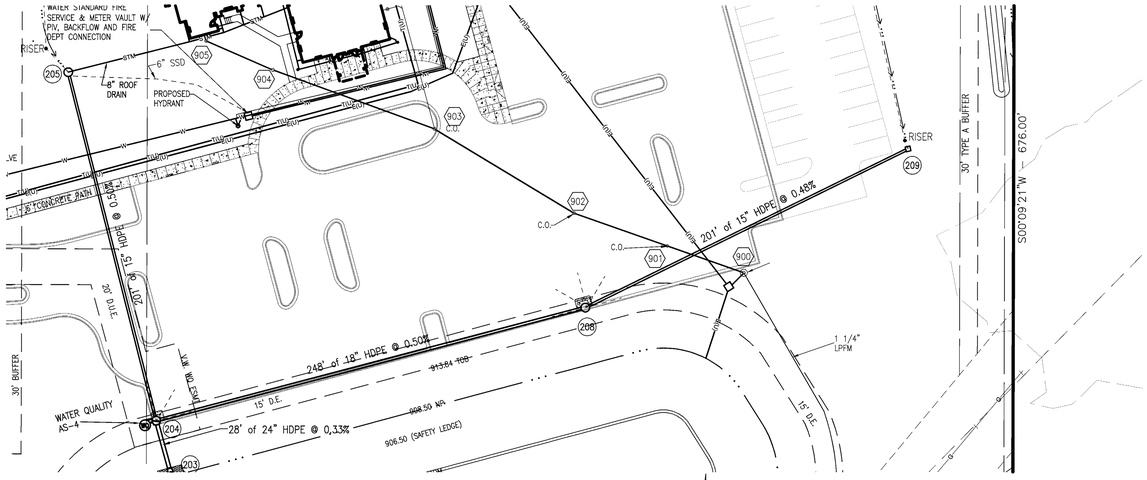

VERTICAL SCALE 1/4

HORIZONTAL SCALE:
SCALE: 1" = 40'
0 20 40 80

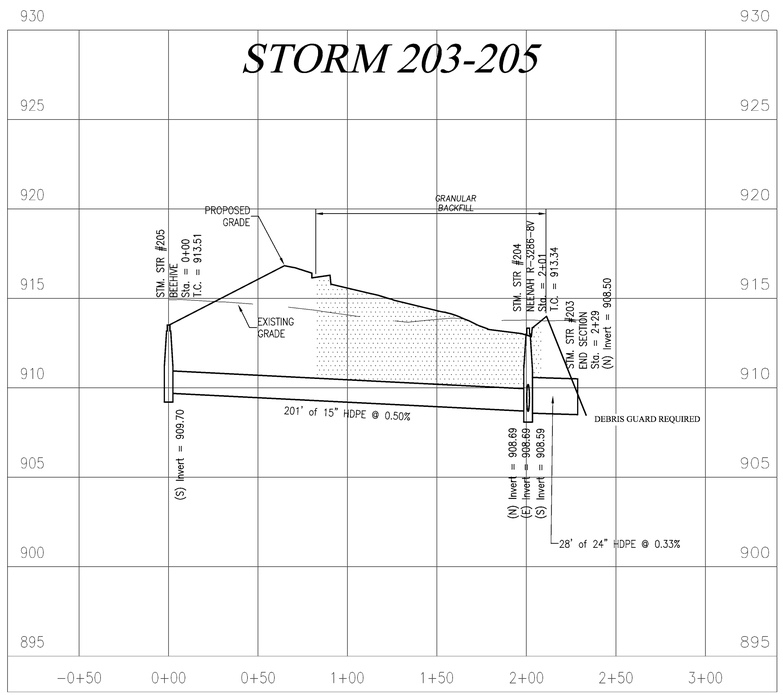

Length (ft)

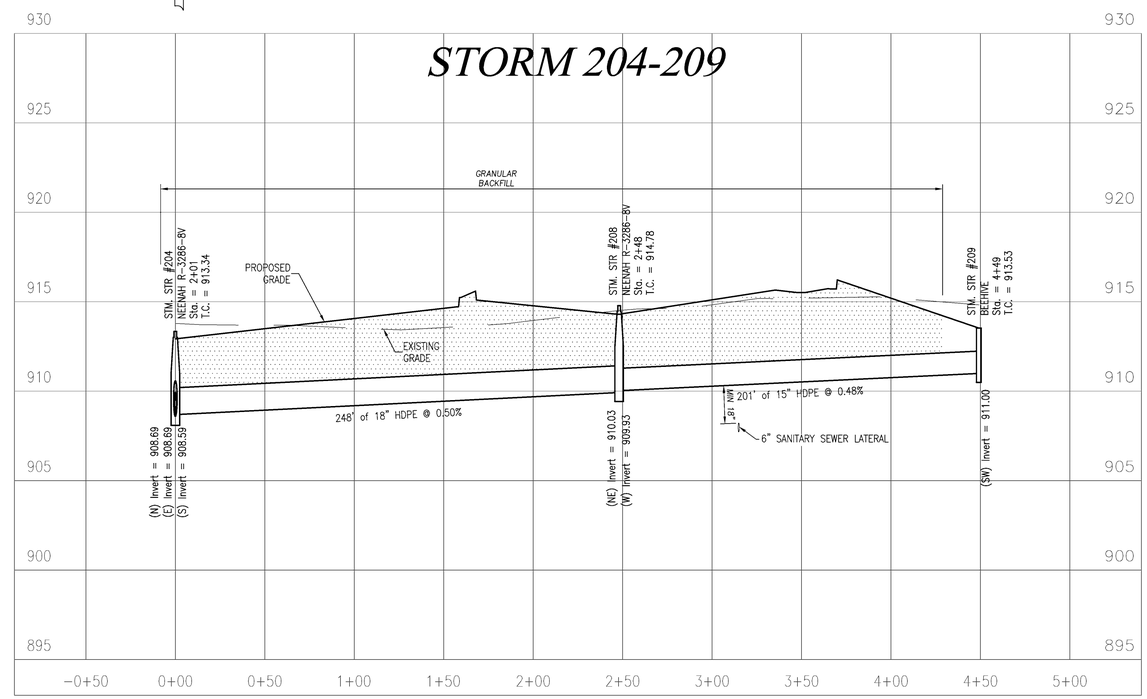

Length (ft)

-NOTE-
STRUCTURES DEEPER THAN 4' MUST BE ACCESSIBLE WITH STEPS

811
Know what's **below.**
Call before you dig.
Within Indiana Call
811 or 800-382-5544
24 Hours a Day, 7 Days a Week.
PER INDIANA STATE LAW IC 8-1-26, IT IS AGAINST THE LAW TO EXCAVATE WITHOUT NOTIFYING THE UNDERGROUND LOCATION SERVICE TWO (2) WORKING DAYS BEFORE COMMENCING WORK.

10505 N. College Avenue
Indianapolis, Indiana 46280
weihe.net
317 | 846 - 6611
800 | 452 - 6408
317 | 843 - 0546 *fax*
ALLAN H. WEIHE, P.E., L.S. - FOUNDER

WEIHE ENGINEERS
Land Surveying | Civil Engineering
Landscape Architecture

PROJECT NO.: W12.0262
DWG NAME: 12-0262/2012-C108-PLP.dwg
DESIGNED BY: EAC/MG
DRAWN BY: EAC/MG
CHECKED BY: JKS
DATE: 06.29.2012

DATE	BY
07/26/12	EAC/MG
8/23/12	EAC

REVISIONS AND ISSUES
50% CD SET
REVISIONS PER WESTFIELD REVIEW

JAMES K. SHINNEMAN
REGISTERED
NO. 10200392
STATE OF INDIANA
PROFESSIONAL ENGINEER
APPROVAL NOT FOR CONSTRUCTION

JAMES K. SHINNEMAN P.E. 10200392

PREPARED FOR:
EPIPHANY EVANGELICAL LUTHERAN CHURCH PHASE ONE
156TH AND DITCH ROAD, WESTFIELD IN

STORM SEWER PLAN AND PROFILE
Part of the SE Corner of SW/1/4 of Section 10, Township 18 North, Range 3 East, Washington Township, Hamilton County, Indiana

SHEET NO.
C108

PROJECT NO.
W12.0262

LOCATION: H:\2012\W12.0262\Engineering\design\consent\120262-C107 prp.dwg
LAYOUT: C108 - STORM PNP
DATE/TIME: August 24, 2012 - 1:24pm
PLOTTED BY: corlere

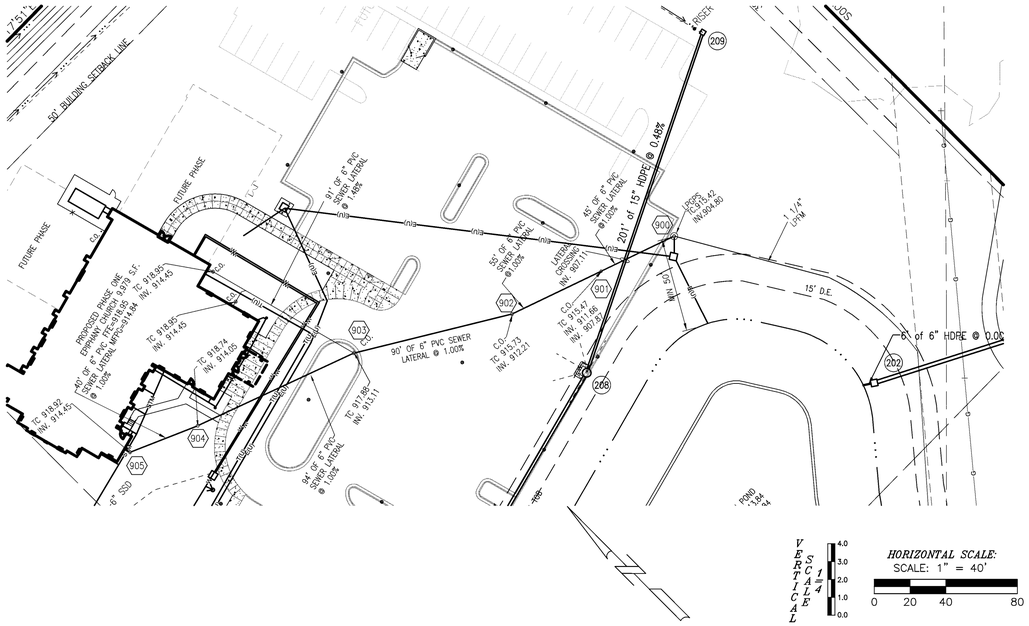

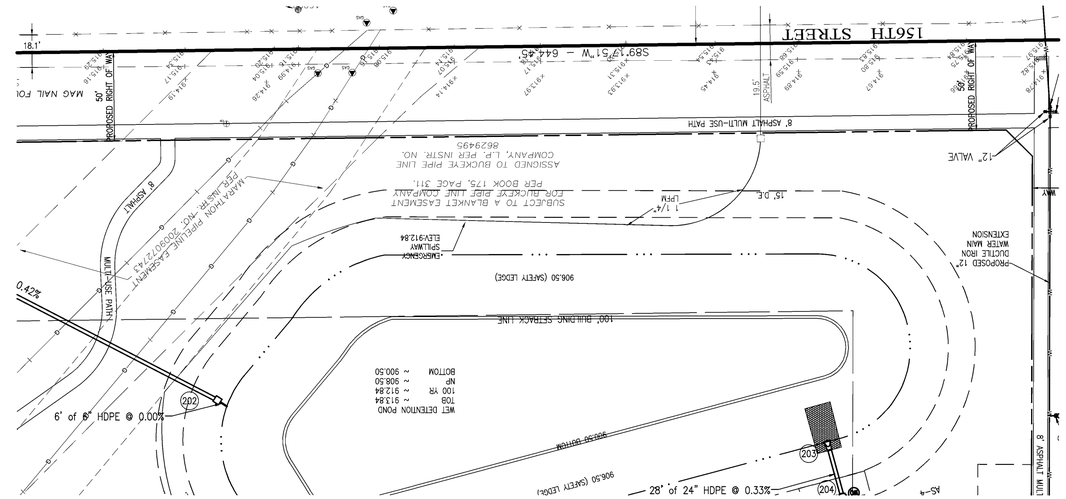

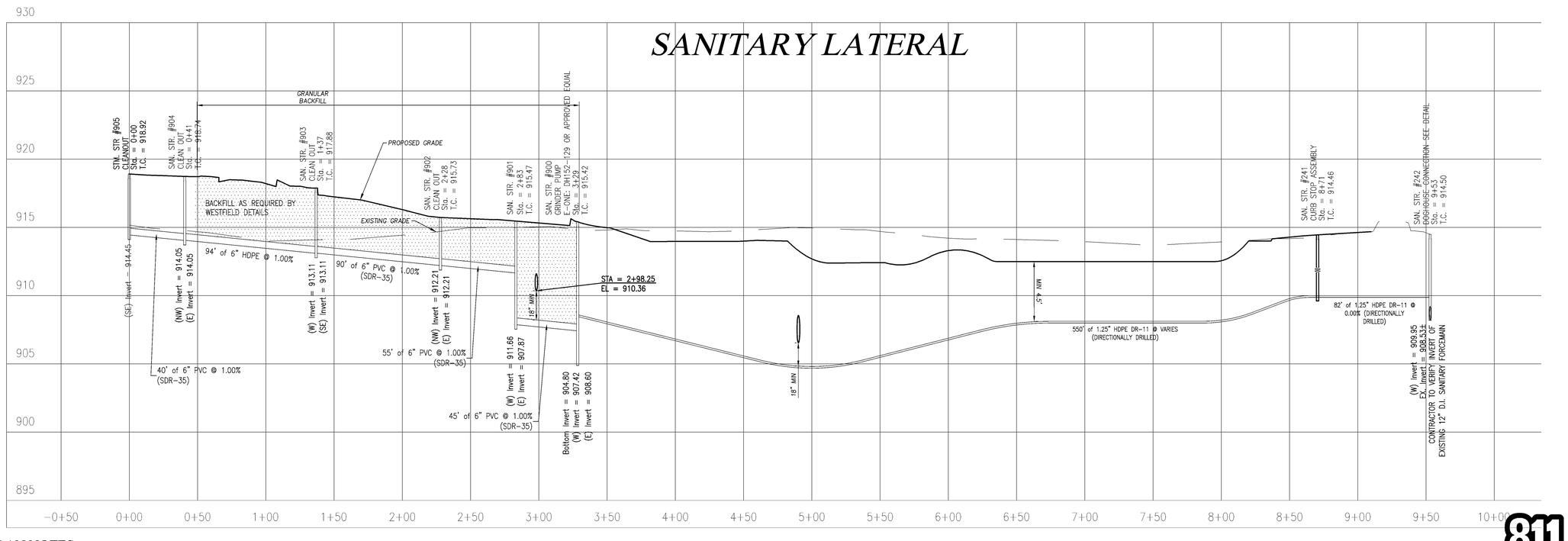

UTILITY PLAN NOTES:

1. CONNECT PROPOSED 6" SANITARY SEWER LPDM TO EXISTING SANITARY FORCEMAIN COORDINATE CONNECTION WITH MEP. PROVIDE CLEANOUTS AS REQUIRED/SHOWN. VERIFY INVERTS ON EXISTING LINE AND COORDINATE CONDITIONS WITH MEP. ADJUST AS REQUIRED
2. PROPOSED SANITARY LATERAL CLEANOUT. REFER TO DETAIL ON SHEET C201
3. PROVIDE 18" MINIMUM VERTICAL CLEARANCE BETWEEN SANITARY/STORM SEWER PIPES AND ALL OTHER PIPES. INSTALL CONCRETE CRADLE IF CLEARANCE IS LESS THAN 18"
4. CONTRACTOR SHALL INSTALL A RECEIVING PIT ON EACH SIDE OF 156TH STREET
5. CONTRACTOR SHALL JACK AND BORE UNDER 156 STREET TO RECEIVING PIT NO OPEN CUT WILL BE ALLOWED
6. CONTRACTOR SHALL LOCATE ALL EXISTING UTILITIES WITHIN THE RIGHT OF WAY BEFORE BORING
7. ALL SANITARY SEWER LATERALS MUST HAVE LOCATION WIRE RUN WHEN INSTALLING LINE.
8. SANITARY SEWER MUST BE INSTALLED OUTSIDE OF 100' OF WATER WELLS.

-CONTRACTOR'S NOTES-

1. LPGPS TO BE DIRECTIONALLY DRILLED
2. INSTALL LPGPS WITH TWO (2) #10 TRACER WIRE PER SPECS ON SHEET C302
3. SEWER TO BE PRIVATE. MAINTENANCE IS TO BE BY THE CHURCH.

-SANITARY SEWER DATA-

1. GRINDER PUMP STATION WILL HANDLE UP TO 370 SANCTUARY SEATS (1850 GPD).
2. AN GRINDER PUMP UPGRADE WILL BE REQUIRED IF CHURCH IS EXPANDED PRIOR TO THE GRAVITY SEWER PROJECT

-NOTE-

RUN WATER LINE A MINIMUM OF 54" DEEP.
PROVIDE MINIMUM OF 10' HORIZONTAL & 2' VERTICAL CLEARANCE BETWEEN WATER & SANITARY LINE. SANITARY SEWER LINE IN PROXIMITY OF WATER LINE SHALL BE C900 WATER MAIN GRADE PVC.

811 Know what's below. Call before you dig.
Within Indiana Call 811 or 800-382-5544
24 Hours a Day, 7 Days a Week.
PER INDIANA STATE LAW IC 8-1-26, IT IS AGAINST THE LAW TO EXCAVATE WITHOUT NOTIFYING THE UNDERGROUND LOCATION SERVICE TWO (2) WORKING DAYS BEFORE COMMENCING WORK.

WEIHE ENGINEERS
Land Surveying | Civil Engineering
Landscape Architecture
10505 N. College Avenue
Indianapolis, Indiana 46280
weihe.net
317 | 846 - 6611
800 | 452 - 6408
317 | 843 - 0546 fax
ALLAN H. WEIHE, P.E., L.S. - FOUNDER

PROJECT NO. W12.0262
DWG. NAME: 12.0262-C109
DESIGNED BY: EAC/MG
DRAWN BY: EAC/MG
CHECKED BY: JKS
DATE: 08.28.2012

DATE	BY
07/09/12	EAC/MG
8/23/12	EAC

REVISIONS AND ISSUES
1 REVISIONS PER WESTFIELD REVIEW

JAMES K. SHINNEMAN P.E. 10200392

PREPARED FOR:
EPIPHANY EVANGELICAL LUTHERAN CHURCH PHASE ONE
156TH AND DITCH ROAD, WESTFIELD IN

SANITARY SEWER PLAN AND PROFILE
Part of the SE Corner of SW1/4 of Section 10, Township 18 North, Range 3 East, Washington Township, Hamilton County, Indiana

SHEET NO. C109
PROJECT NO. W12.0262

LOCATION: H:\2012\W12.0262\Engineering\design\Layout\12.0262-C107 prop.dwg
LAYOUT: C109 SANITARY PROFILE
DATE/TIME: August 24, 2012 - 12:08pm
PLOTTED BY: carlene

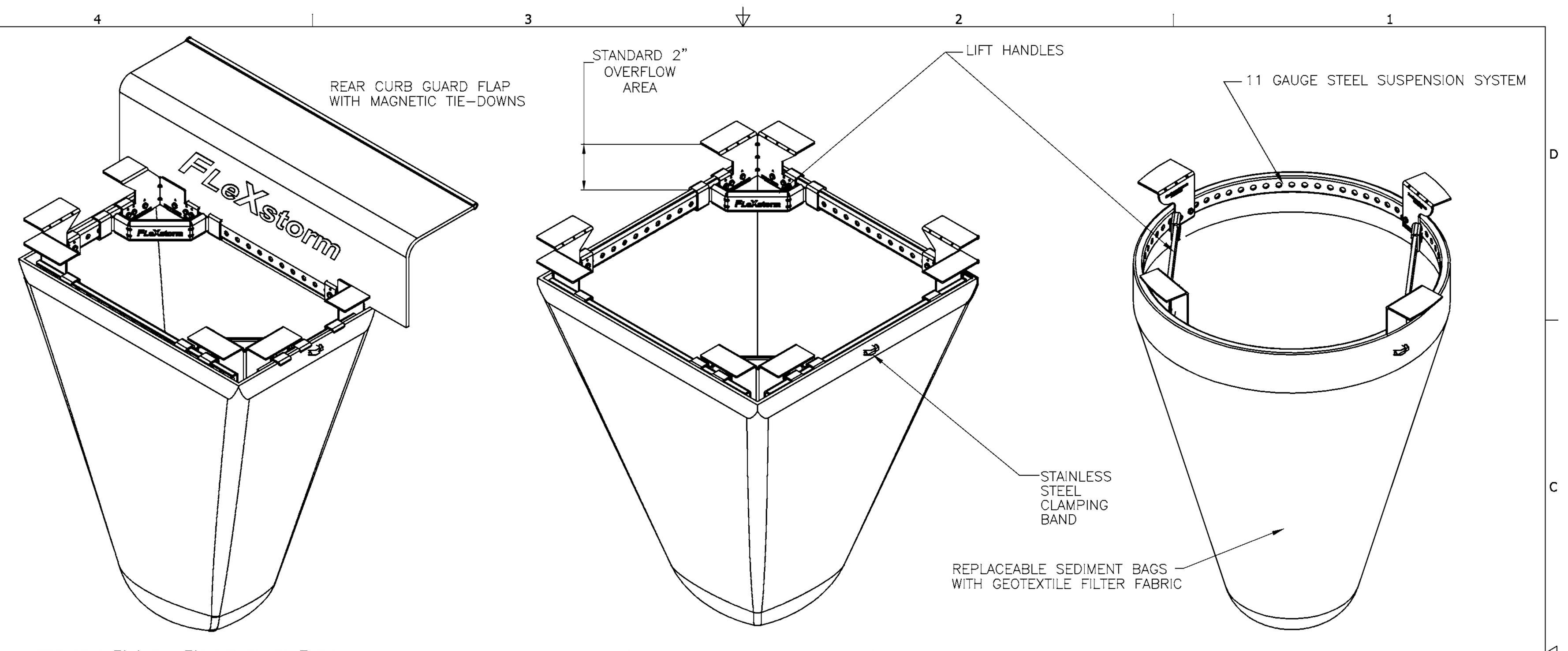

TYPICAL CURB BOX INLET FILTER

TYPICAL FLAT/RECTANGULAR/ROLLED CURB INLET FILTER

TYPICAL ROUND INLET FILTER

FLEXSTORM Inlet Filter Specifications		
WOVEN Geotextile Sediment Bag Specs (2 ft^3 vol)		
Material Property	Test Method	Value (ave)
Grab Tensile	ASTM D 4632	255 x 275
Puncture Strength	ASTM D 4833	135 lbs
Trapezoidal Tear	ASTM D 4533	75 lbs
UV Resistance	ASTM D 4355	90%
App Open Size (AOS)	ASTM D 4751	20 sieve
Permittivity	ASTM D 4491	1.5 / sec
Water Flow Rate	ASTM D 4491	200 gpm/sqft
Sediment Removal Efficiency (8% mix)	ASTM D 7351	82%

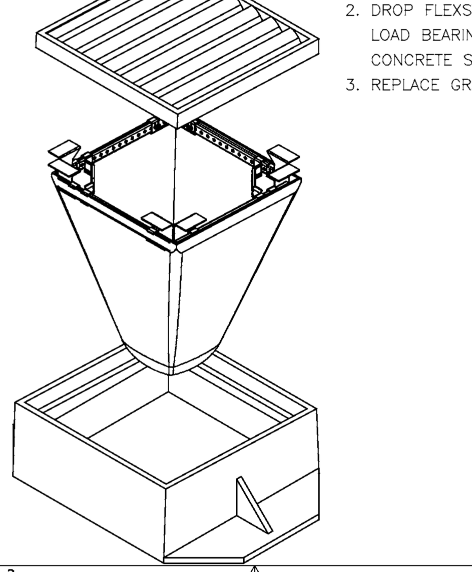

INSTALLATION:
1. REMOVE GRATE
2. DROP FLEXSTORM INLET FILTER ONTO LOAD BEARING LIP OF CASTING OR CONCRETE STRUCTURE
3. REPLACE GRATE

DRAWN IPP	ALL PRODUCTS MANUFACTURED BY INLET & PIPE PROTECTION, INC DISTRIBUTED BY ADS WWW.INLETFILTERS.COM (866) 287–8655 PH (630) 355–3477 FX INFO@INLETFILTERS.COM
CHECKED	
QA	
MFG	
APPROVED	
SIZE C	DWG NO FLEXSTORM_SPECS REV
SCALE	SHEET 1 OF 1

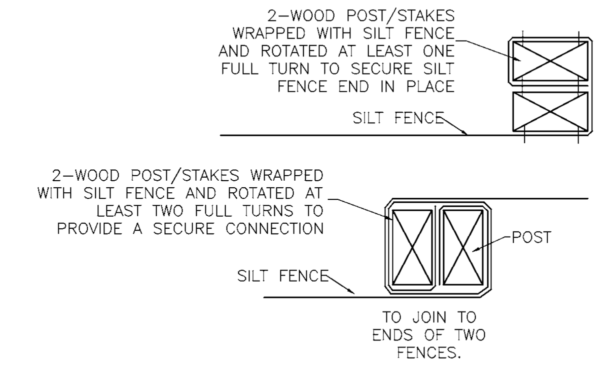

MAXIMUM LOAD SLOPE AND DISTANCE FOR WHICH A SILT FENCE IS APPLICABLE

LOAD SLOPE	MAX. DISTANCE ABOVE FENCE
LESS THAN 2%	100 FT.
2 TO 5%	75 FT.
5 TO 10%	50 FT.
10 TO 20%	25 FT.
MORE THAN 20%	15 FT.

POSTS: STEEL T OR U TYPE, OR 2"X2" HARD WOOD POST
FENCE: WOVEN WIRE, 14–1/2 GA., 6" MAX. MESH OPENING
FABRIC: IN ACCORDANCE WITH ASTM D 6461 LATEST EDITION.

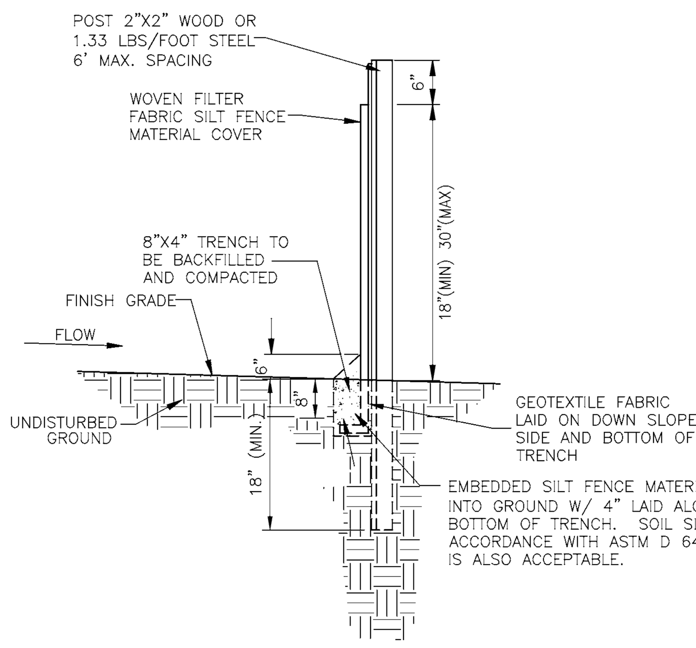

WITHOUT WIRE SUPPORT

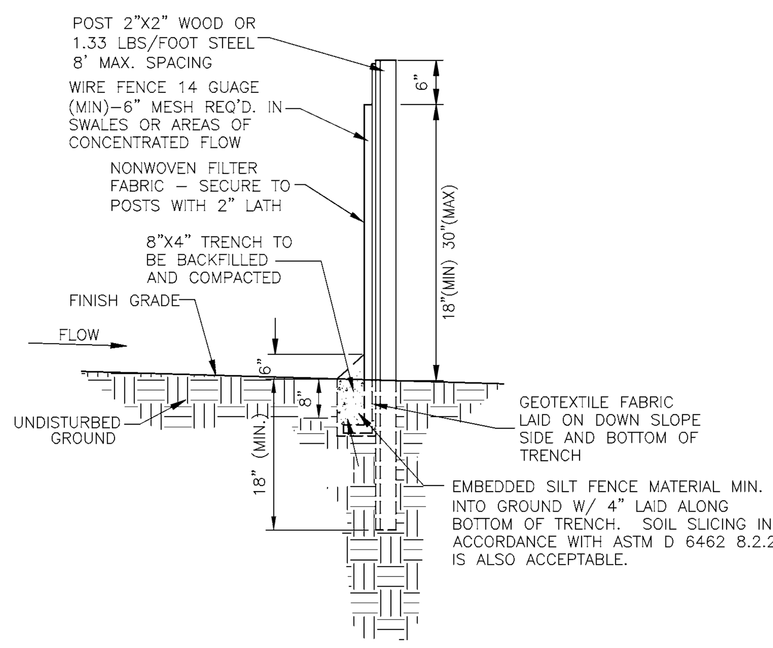

WITH WIRE SUPPORT

INSTALLATION
PREFABRICATED SILT FENCE
1. LAY OUT THE LOCATION OF THE FENCE SO THAT IT IS PARALLEL TO THE CONTOUR OF THE SLOPE AND AT LEAST 10 FEET BEYOND THE TOE OF THE SLOPE TO PROVIDE A SEDIMENT STORAGE AREA. TURN THE ENDS OF THE FENCE UP SLOPE SUCH THAT THE POINT OF CONTACT BETWEEN THE GROUND AND THE BOTTOM OF THE FENCE END TERMINATES AT A HIGHER ELEVATION THAN THE TOP OF THE FENCE AT ITS LOWEST POINT.
2. EXCAVATE AN EIGHT–INCH DEEP BY FOUR–INCH WIDE TRENCH ALONG THE ENTIRE LENGTH OF THE FENCE LINE. INSTALLATION BY PLOWING IS ALSO ACCEPTABLE.
3. INSTALL THE SILT FENCE WITH THE FILTER FABRIC LOCATED ON THE UP–SLOPE SIDE OF THE EXCAVATED TRENCH AND THE SUPPORT POSTS ON THE DOWN–SLOPE SIDE OF THE TRENCH.
4. DRIVE THE SUPPORT POSTS AT LEAST 18 INCHES INTO THE GROUND, TIGHTLY STRETCHING THE FABRIC BETWEEN THE POSTS AS EACH IS DRIVEN INTO THE SOIL. MINIMUM OF 12 INCHES OF THE FILTER FABRIC SHOULD EXTEND INTO THE TRENCH.
5. LAY THE LOWER FOUR INCHES OF FILTER FABRIC ON THE BOTTOM OF THE TRENCH AND EXTEND IT TOWARD THE UP–SLOPE SIDE OF THE TRENCH.
6. BACKFILL THE TRENCH WITH SOIL MATERIAL AND COMPACT IT IN PLACE.

NOTE: IF THE SILT FENCE IS BEING CONSTRUCTED ON–SITE, ATTACH THE FILTER FABRIC TO THE SUPPORT POSTS AND ATTACH WOODEN LATHE TO SECURE THE FABRIC TO THE POSTS. ALLOW FOR AT LEAST 12 INCHES OF FABRIC BELOW GROUND LEVEL. COMPLETE THE SILT FENCE INSTALLATION, FOLLOWINGSTEPS 1 THROUGH 6 ABOVE.

MAINTENANCE
_ INSPECT WITHIN 24 HOURS OF A RAIN EVENT AND AT LEAST ONCE EVERY SEVEN CALENDAR DAYS.
_ IF FENCE FABRIC TEARS, STARTS TO DECOMPOSE, OR IN ANY WAY BECOMES INEFFECTIVE, REPLACE THE AFFECTED PORTION IMMEDIATELY. NOTE: ALL REPAIRS SHOULD MEET SPECIFICATIONS AS OUTLINED WITHIN THIS MEASURE.
_ REMOVE DEPOSITED SEDIMENT WHEN IT IS CAUSING THE FILTER FABRIC TO BULGE OR WHEN IT REACHES ONE–HALF THE HEIGHT OF THE FENCE AT ITS LOWEST POINT. WHEN CONTRIBUTING DRAINAGE AREA HAS BEEN STABILIZED, REMOVE THE FENCE AND SEDIMENT DEPOSITS, GRADE THE SITE TO BLEND WITH THE SURROUNDING AREA, AND STABILIZE.

REFFERENCE IN CHAPTER 7 PAGES 215–221 IN THE INDIANA STORM WATER QUALITY MANUAL

SEDIMENTATION/SILT FENCE
(NO SCALE)

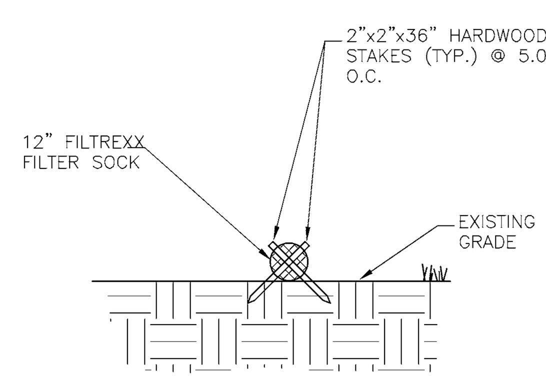

COIR LOG (FIBER ROLL)

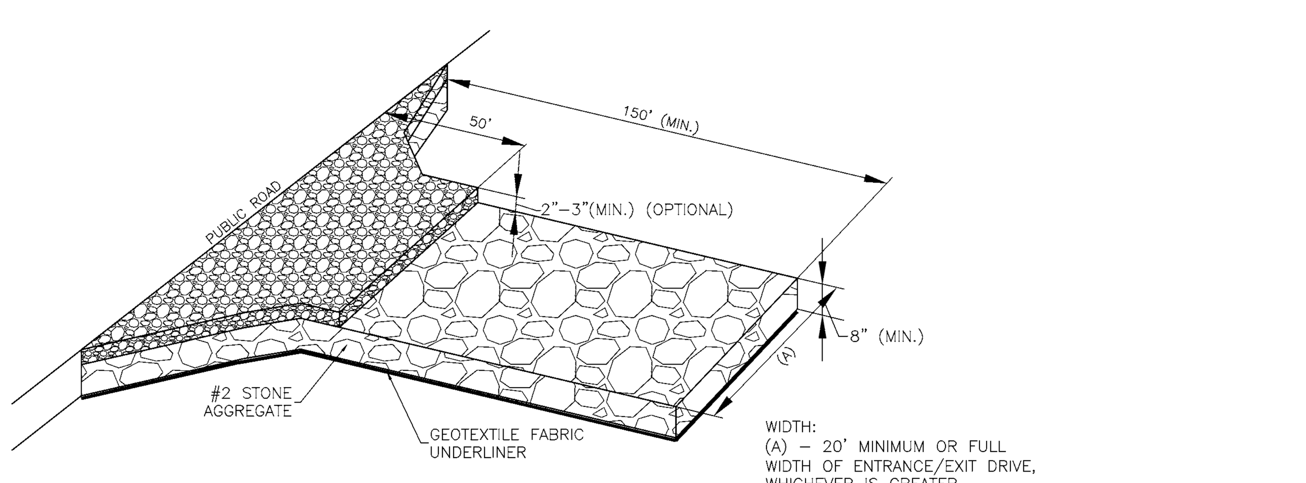

WIDTH:
(A) – 20' MINIMUM OR FULL WIDTH OF ENTRANCE/EXIT DRIVE, WHICHEVER IS GREATER.

INSTALLATION:
1. REMOVE ALL VEGETATION AND OTHER OBJECTIONABLE MATERIAL FROM THE FOUNDATION AREA.
2. GRADE FOUNDATION AND CROWN FOR POSITIVE DRAINAGE. IF THE SLOPE OF THE CONSTRUCTION ENTRANCE IS TOWARD A PUBLIC ROAD AND EXCEEDS TWO PERCENT, CONSTRUCT AN EIGHT INCH HIGH DIVERSION RIDGE WITH A RATIO OF 3–TO–1 SIDE SLOPES ACROSS THE FOUNDATION AREA ABOUT 15 FEET FROM THE ENTRANCE TO DIVERT RUNOFF AWAY FROM THE ROAD.
3. INSTALL A CULVERT PIPE UNDER THE PAD IF NEEDED TO MAINTAIN PROPER PUBLIC ROAD DRAINAGE.
4. IF WET CONDITIONS ARE ANTICIPATED, PLACE GEOTEXTILE FABRIC ON THE GRADED FOUNDATION TO IMPROVE STABILITY.
5. PLACE AGGREGATE (INDOT CA NO. 2) TO THE DIMENSIONS AND GRADE SHOWN IN THE CONSTRUCTION PLANS, LEAVING THE SURFACE SMOOTH AND SLOPED FOR DRAINAGE.
6. TOP–DRESS THE FIRST 50 FEET ADJACENT TO THE PUBLIC ROADWAY WITH TWO TO THREE INCHES OF WASHED AGGREGATE (INDOT CA NO. 53) [OPTIONAL, USED PRIMARILY WHERE THE PURPOSE OF THE PAD IS TO KEEP SOIL FROM ADHERING TO VEHICLE TIRES].
7. WHERE POSSIBLE, DIVERT ALL STORM WATER RUNOFF AND DRAINAGE FROM THE INGRESS/EGRESS PAD TO A SEDIMENT TRAP OR BASIN.

MAINTENANCE:
_ INSPECT DAILY.
_ RESHAPE PAD AS NEEDED FOR DRAINAGE AND RUNOFF CONTROL.
_ TOP DRESS WITH CLEAN AGGREGATE AS NEEDED.
_ IMMEDIATELY REMOVE MUD AND SEDIMENT TRACKED OR WASHED ONTO PUBLIC ROADS.
_ FLUSHING SHOULD ONLY BE USED IF THE WATER CAN BE CONVEYED INTO A SEDIMENT TRAP OR BASIN.

REFRENCED IN CHAPTER 7 PAGE 17–20 IN INIANA STORM WATER QUALITY MANUAL.

TEMPORARY CONSTRUCTION INGRESS/EGRESS PAD
LARGE SITES – TWO ACRES OR LARGER (NO SCALE)

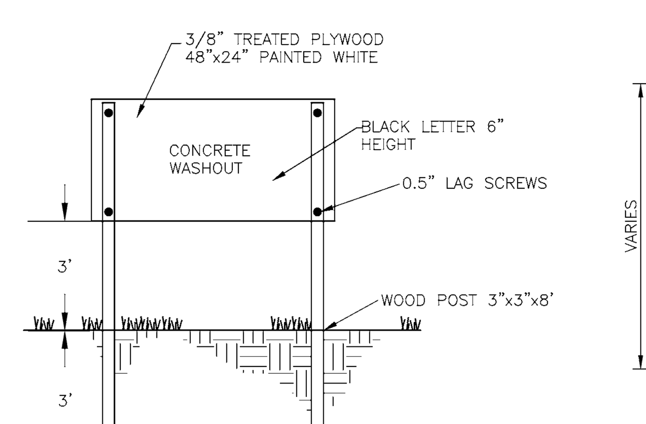

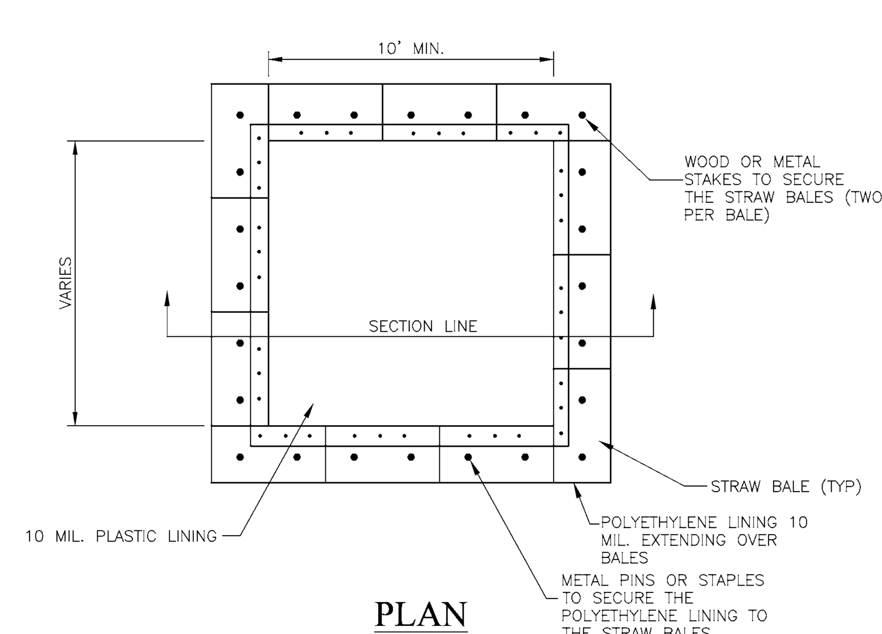

PLAN

NOTES:
1. ACTUAL LAYOUT DETERMINED IN FIELD.
2. THE CONCRETE WASHOUT SIGN SHALL BE INSTALLED WITHIN 30FT. OF THE TEMP. CONCRETE WASHOUT FACILITY

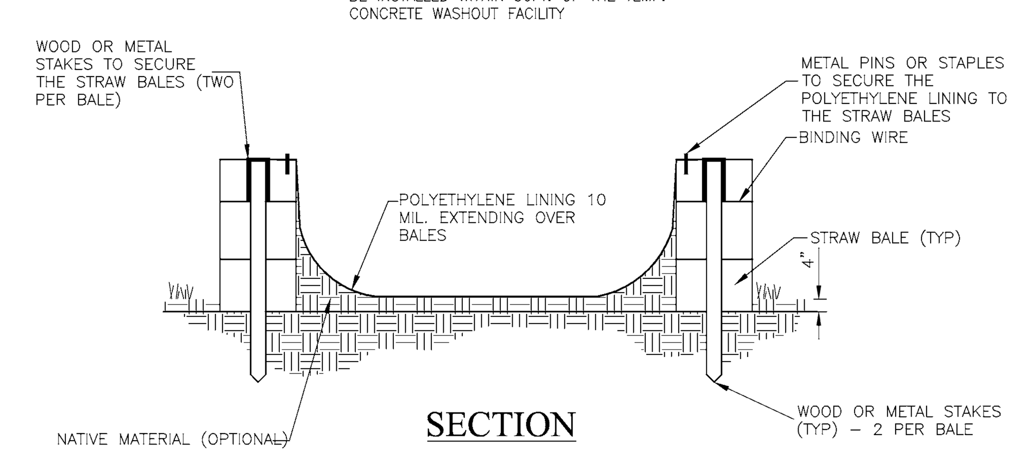

SECTION

INSTALLATION
1. UTILIZE AND FOLLOW THE DESIGN IN THE STORM WATER POLLUTION PREVENTION PLAN TO INSTALL THE SYSTEM.
2. DEPENDENT UPON THE TYPE OF SYSTEM, EITHER EXCAVATE THE PIT OR INSTALL THE CONTAINMENT SYSTEM.
3. A BASE SHALL BE CONSTRUCTED AND PREPARED THAT IS FREE OF ROCKS AND OTHER DEBRIS THAT MAY CAUSE TEARS OR PUNCTURES IN THE POLYETHYLENE LINING.
4. INSTALL THE POLYETHYLENE LINING. FOR EXCAVATED SYSTEMS, THE LINING SHOULD EXTEND OVER THE ENTIRE EXCAVATION. THE LINING FOR BERMED SYSTEMS SHOULD BE INSTALLED OVER THE POOLING AREA WITH ENOUGH MATERIAL TO EXTEND THE LINING OVER THE BERM OR CONTAINMENT SYSTEM. THE LINING SHOULD BE SECURED WITH PINS, STAPLES, OR OTHER FASTENERS.
5. PLACE FLAGS, SAFETY FENCING, OR EQUIVALENT TO PROVIDE A BARRIER TO CONSTRUCTION EQUIPMENT AND OTHER TRAFFIC.
6. PLACE A NON–COLLAPSING, NON–WATER HOLDING COVER OVER THE WASHOUT FACILITY PRIOR TO A PREDICTED RAINFALL EVENT TO PREVENT ACCUMULATION OF WATER AND POSSIBLE OVERFLOW OF THE SYSTEM (OPTIONAL).
7. INSTALL SIGNAGE THAT IDENTIFIES CONCRETE WASHOUT AREAS.
8. POST SIGNS DIRECTING CONTRACTORS AND SUPPLIERS TO DESIGNATED LOCATIONS.
9. WHERE NECESSARY, PROVIDE STABLE INGRESS AND EGRESS (SEE TEMPORARY CONSTRUCTION INGRESS/EGRESS PAD ON PAGE 17) OR ALTERNATIVE APPROACH PAD FOR CONCRETE WASHOUT SYSTEMS.

CONCRETE WASHOUT
TYPE "ABOVE GRADE W/ STRAW BALES" (NO SCALE)

811 Know what's below. Call before you dig.

Within Indiana Call
811 or 800–382–5544
24 Hours a Day, 7 Days a Week.

PER INDIANA STATE LAW IC 8–1–26. IT IS AGAINST THE LAW TO EXCAVATE WITHOUT NOTIFYING THE UNDERGROUND LOCATION SERVICE TWO (2) WORKING DAYS BEFORE COMMENCING WORK.

10505 N. College Avenue
Indianapolis, Indiana 46280
weihe.net
317 | 846 - 6611
800 | 452 - 6408
317 | 843 - 0546 *fax*
ALLAN H. WEIHE, P.E., L.S. - FOUNDER
WEIHE ENGINEERS
Land Surveying | Civil Engineering
Landscape Architecture

PROJECT NO.: W12.0262
DWG NAME: 120262–C201 det.dwg
DESIGNED BY: EAC/MG
DRAWN BY: EAC/MG
CHECKED BY: JKS
DATE: 06.29.2012

DATE	BY	REVISIONS AND ISSUES
07/26/12	EAC/MG	50% CD SET
8/23/12	EAC	△ REVISIONS PER WESTFIELD REVIEW

JAMES K. SHINNEMAN REGISTERED NO. 10200392 STATE OF INDIANA PROFESSIONAL ENGINEER
APPROVAL PENDING NOT FOR CONSTRUCTION

JAMES K. SHINNEMAN P.E. 10200392

PREPARED FOR:
EPIPHANY EVANGELICAL LUTHERAN CHURCH PHASE ONE
156TH AND DITCH ROAD, WESTFIELD IN

SWPPP (PHASE I) DETAILS

Part of the SE Corner of SW/1/4 of Section 10, Township 18 North, Range 3 East, Washington Township, Hamilton County, Indiana

SHEET NO. C201

PROJECT NO. W12.0262

LOCATION: H:\2012\w120262\Engineering\design\conset\120262–C201 det.dwg
LAYOUT: C201 – SWPPP 1 DETAILS
DATE/TIME: August 24, 2012 – 12:09pm
PLOTTED BY: cartere

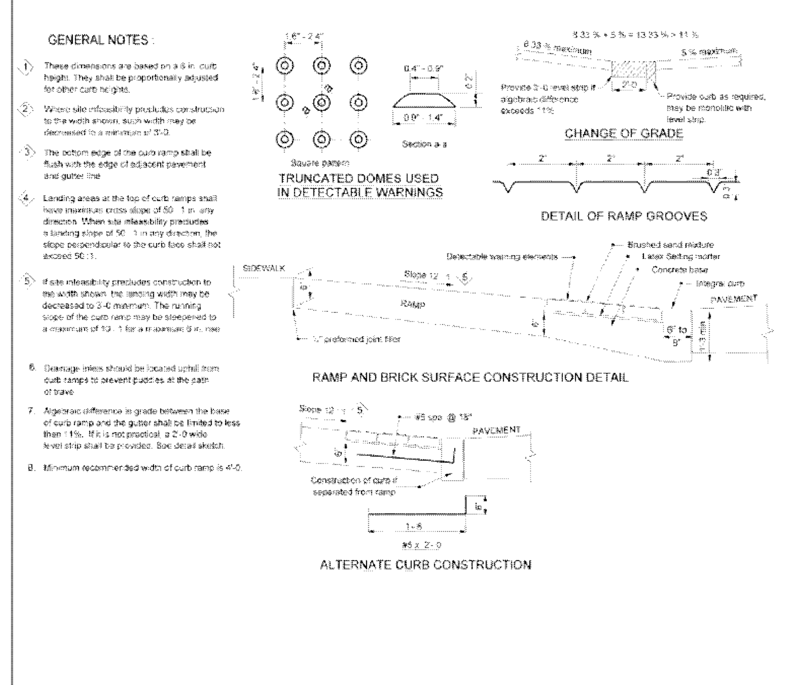

SIDEWALK RAMP FOR HANDICAPPED

TOWN OF WESTFIELD, INDIANA

Renée Lynn Goff 10/9/06 DATE — FIGURE P-11

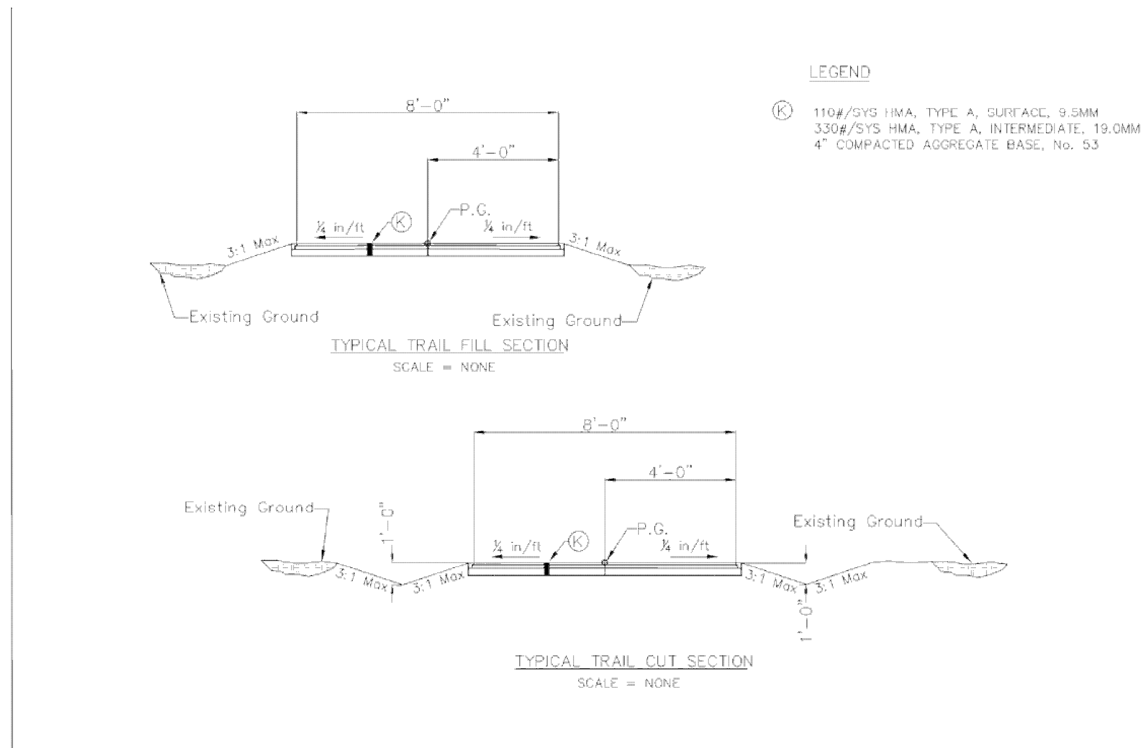

TYPICAL CROSS SECTIONS: WESTFIELD ALTERNATIVE TRANSPORTATION PLAN

TYPICAL TRAIL CUT AND FILL – 8' TRAIL — CITY OF WESTFIELD, INDIANA — FIGURE PT-01

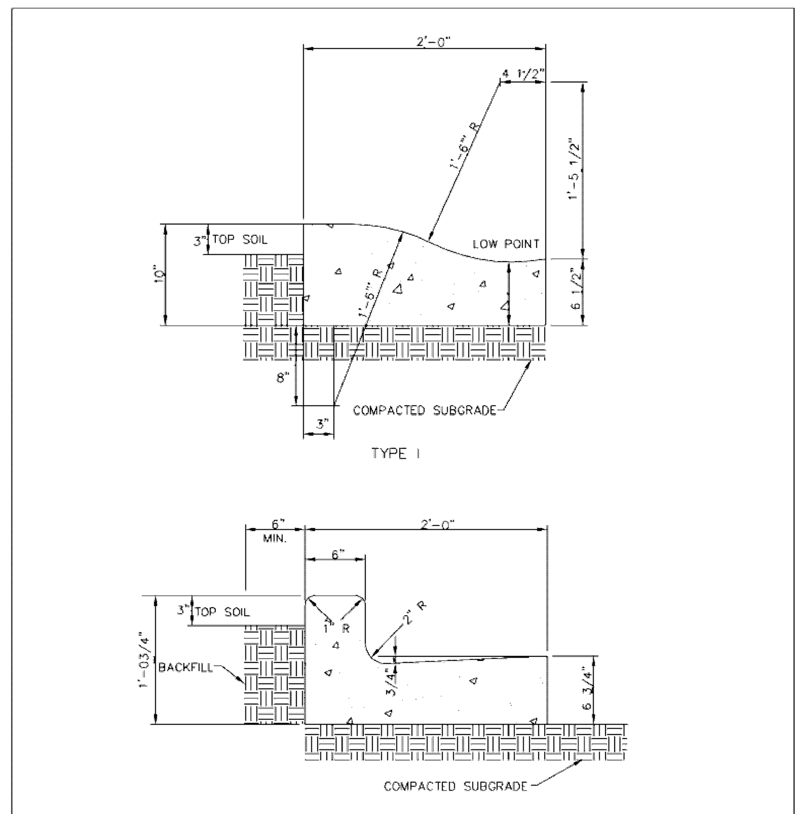

CONCRETE CURB AND GUTTER TYPE I & II

TOWN OF WESTFIELD, INDIANA

Renée Lynn Goff 10/9/06 DATE — FIGURE P-8

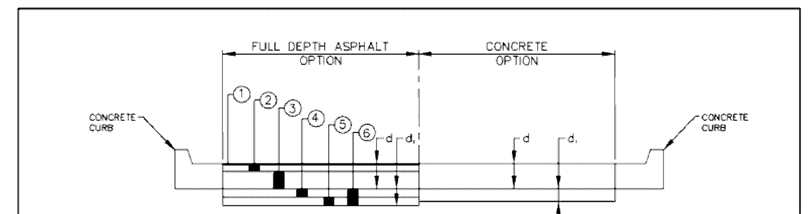

INDUSTRIAL AND ARTERIAL

	ASPHALT (d+d₁ =9"+9"=18")	ASPHALT ALTERNATIVE (d+d₁ =9"+18"=27")
1	1" SURFACE #11 OR #12	1" SURFACE #11 OR #12
2	2" BINDER #9	2" BINDER #9
3	6" BASE #50	6" BASE #50
4	N.A.	N.A.
5	N.A.	6" COMP. AGGR. SIZE No 53
6	9" COMP. AGGR. (SIZE No. 53)	12" LIME TREATED * SUBBASE

CONCRETE
d=8" CONCRETE
d =6" COMP. AGGR. (SIZE 53)

* LIME MODIFICATION SHALL BE BETWEEN 3% AND 6% BY WEIGHT WITH THE SOIL TEMPERATURE 45' OR ABOVE MEASURED 4"(100mm) BELOW THE SUBGRADE SURFACE WITH THE AIR TEMPERATURE RISING, ALL IN ACCORDANCE WITH THE LATEST AMENDED VERSION OF THE INDIANA DEPARTMENT OF TRANSPORTATION'S SPECIAL PROVISION FOR LIME MODIFICATION.

NOTE: * DEPTH OF CONCRETE GUTTER SHALL EQUAL DEPTH OF CONCRETE PAVEMENT.

TYPICAL PAVEMENT SECTIONS

TOWN OF WESTFIELD, INDIANA

Renée Lynn Goff 10/9/06 DATE — FIGURE P-3

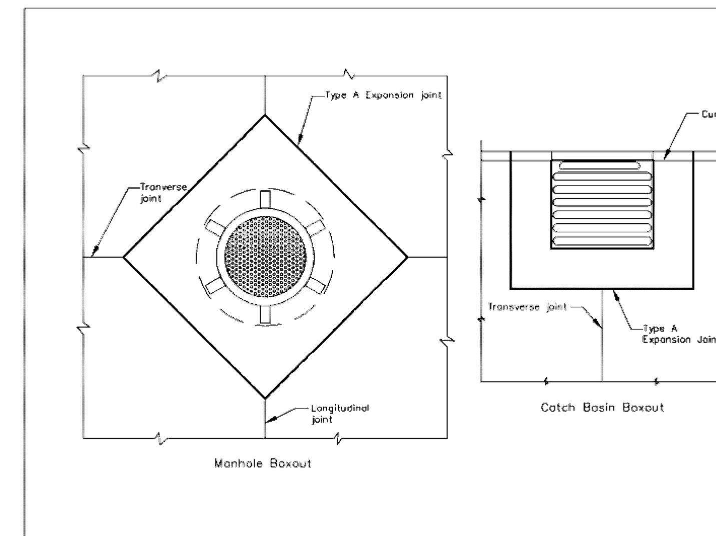

1. All catch basins shall be separated from the pavement and curb by boxing out around basin as shown above. Expansion joint material shall extend completely through curb and slab. Manhole castings within the pavement limits shall be boxed in like manner except when telescoping-type castings are used.
2. When a joint falls within 5 ft. of or contacts basins, manholes, or other structures, shorten one or more panels either side of opening to permit joint to fall on round structures and at or between corners of rectangular structures.

STRUCTURE DETAILS

TOWN OF WESTFIELD, INDIANA

Renée Lynn Goff 10/9/06 DATE — FIGURE P-6

10505 N. College Avenue
Indianapolis, Indiana 46280
weihe.net
317 | 846 - 6611
800 | 452 - 6408
317 | 843 - 0546 *fax*
ALLAN H. WEIHE, P.E., L.S. - FOUNDER

WEIHE ENGINEERS
Land Surveying | Civil Engineering
Landscape Architecture

PROJECT NO.: W12.0262
DWG NAME: 120262-C201 det.dwg
DESIGNED BY: EAC/MG
DRAWN BY: EAC/MG
CHECKED BY: JKS
DATE: 06.29.2012

DATE	BY	REVISIONS AND ISSUES
07/26/12	EAC/MG	50% CD SET
8/23/12	EAC	REVISIONS PER WESTFIELD REVIEW

JAMES K. SHINNEMAN P.E. 10200392

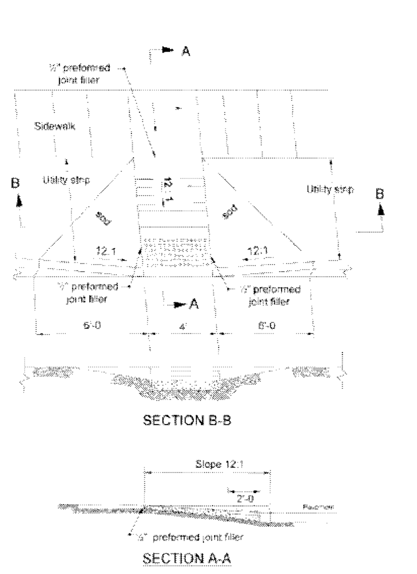

SIDEWALK RAMP FOR HANDICAPPED

TOWN OF WESTFIELD, INDIANA

Renée Lynn Goff 10/9/06 DATE — FIGURE P-11A

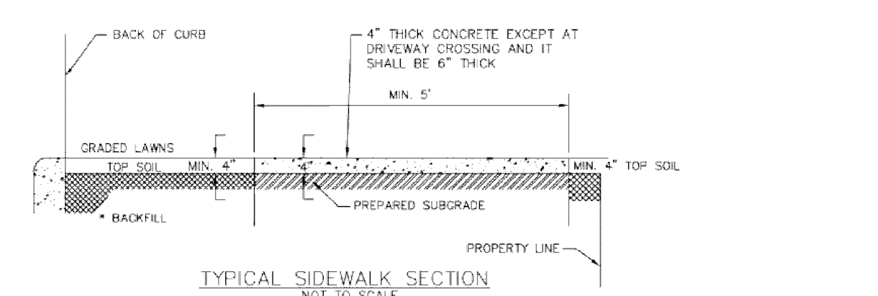

* THE SPACE BEHIND THE CURB SHALL BE FILLED WITH SUITABLE MATERIAL TO THE REQUIRED ELEVATION AND COMPACTED IN LAYERS NOT TO EXCEED 6" IN DEPTH.

SUBGRADE UNDER ALL CURBS, SIDEWALKS, AND DRIVES SHALL BE COMPACTED IN ACCORDANCE WITH I.N.D.O.T. SPECIFICATIONS.

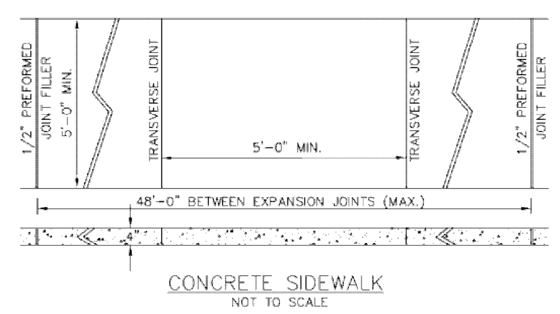

TYPICAL CROSS SECTIONS: WESTFIELD ALTERNATIVE TRANSPORTATION PLAN

SIDEWALK DETAIL — CITY OF WESTFIELD, INDIANA — FIGURE PT-02

NOTE:
SIGN IS TO BE MOUNTED ON GALVANIZED STEEL U-POST AND MEET IN.D.O.T. AND INDIANA MANUAL ON UNIFORM TRAFFIC CONTROL DEVICES FOR STREETS AND HIGHWAYS.

STOP SIGN (24" x 24")
(NO SCALE)

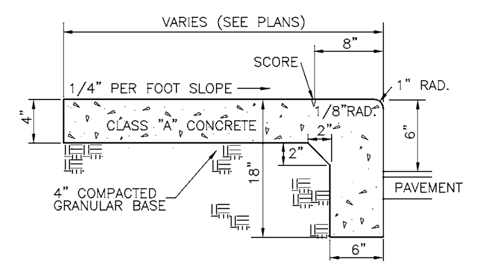

INTEGRAL WALK AND CURB DETAIL
(NO SCALE)

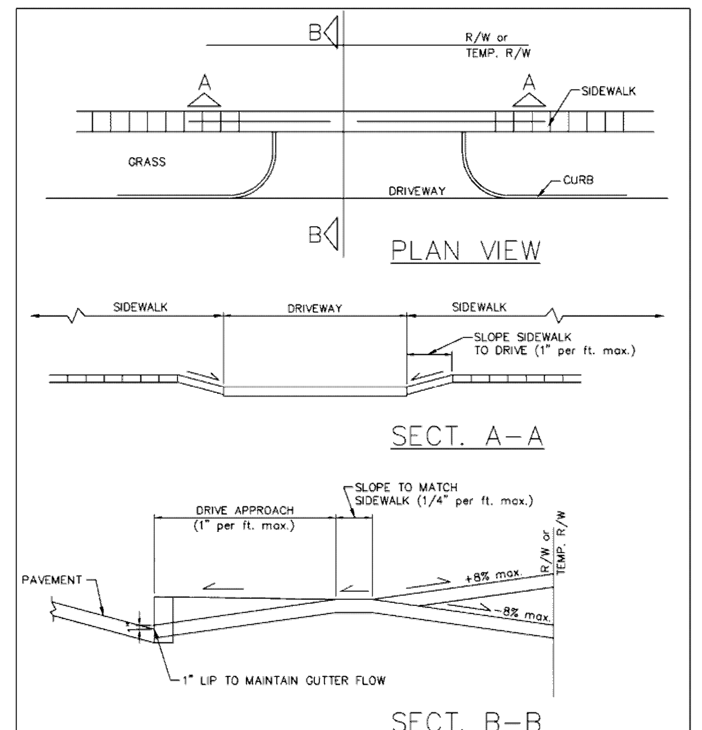

TYPICAL DRIVEWAY SECTION

TOWN OF WESTFIELD, INDIANA

Renée Lynn Goff 10/9/06 DATE — FIGURE P-17

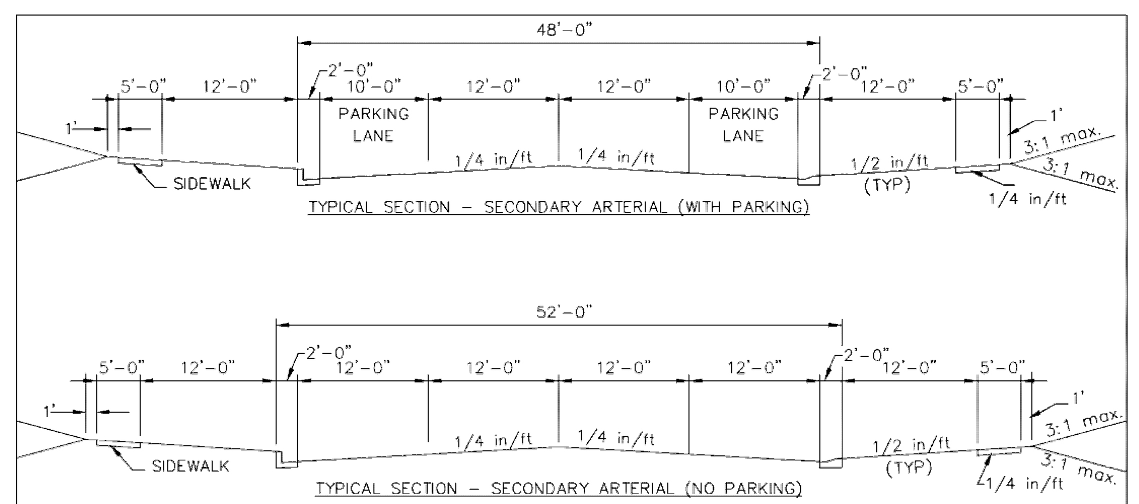

NOTES:
1. The curb & gutter shall be Type I or Type II as shown on the Curb & Gutter standard sheets. Type II curb & gutter shall be used adjacent to, and in, non-residential or multi-family residential areas and on entrances of residential development along thoroughfares.
2. For curb and gutter detail, see figure P-8
3. For minimum Right of Way requirements, see figures G-14 and G-14.1

TOWN OF WESTFIELD, INDIANA

Renée Lynn Goff 10/9/06 DATE — FIGURE G-03

NOTE: ALL PAINT TO BE NON-SKID SURFACE APPLICATION OF CILICA SAND OR GLASS BEAD BY METHOD OF MIXTURE AND OR BROADCASTING.

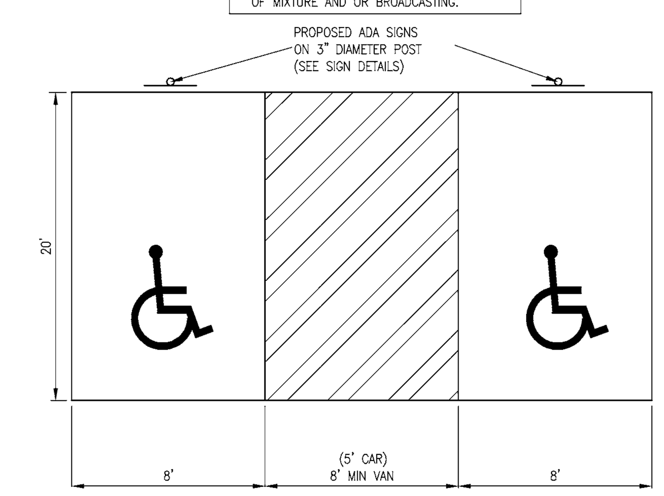

"ADA" PARKING SPACES
(NO SCALE)

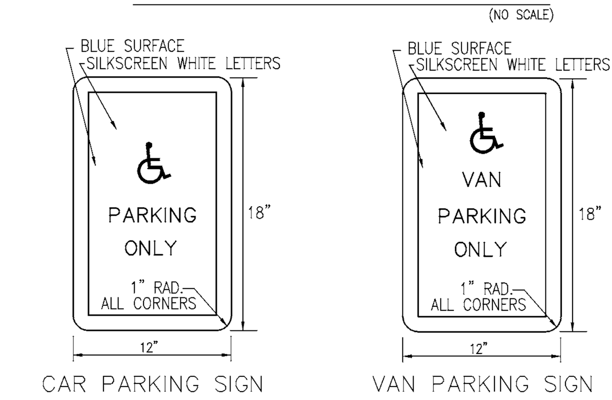

NOTE: 12"X18" 18 GAUGE HOT DIP GALVANIZED NON-REFLECTIVE SIGN WITH 12' POST DRIVEN 4 FEET INTO GROUND. POST SHALL BE 12' LONG GALVANIZED 2 1/2" OD STEEL POSTS PAINTED GREEN TO MATCH LIGHT POLES SET BOTTOM OF SIGN 7' ABOVE GRADE

"ADA" SIGNS
(NO SCALE)

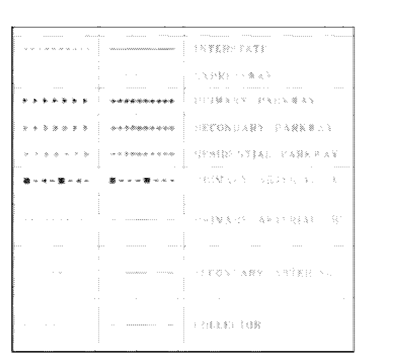

CLASSIFICATION		MINIMUM RIGHT OF WAY AT ITNERSCTION	AT THOUGH LANES
INTERSTATE		VARIES	VARIES
EXPRESSWAY		VARIES	VARIES
PRIMARY PARKWAY	WITH PATHS	160'	140'
SECONDARY PARKWAY	WITH PATHS	150'	120'
RESIDENTIAL PARKWAY	WITH PATHS	130'	100'
PRIMARY ARTERIAL "A"	WITH PATHS	170'	150'
PRIMARY ARTERIAL "B"	WITH MULTI-USE PATHS WITH FULL SEPERATION	150'	130'
	WITHOUT MULTI-USE PATHS	140'	120'
SECONDARY ARTERIAL	WITH MULTI-USE PATHS WITH FULL SEPERATION	150'	120'
	WITHOUT MULTI-USE PATHS	120'	90'
COLLECTOR	WITH MULTI-USE PATHS WITH FULL SEPERATION	130'	100'
	WITHOUT MULTI-USE PATHS	120'	80'

TOWN OF WESTFIELD, INDIANA

Renée Lynn Goff 10/9/06 DATE — FIGURE G-14.1

NOTE:
CONSTRUCTION PLANS SHALL INCLUDE CENTERLINE PROFILE OF THE EXISTING ROAD BEING INTERSECTED BY THE ENTRANCE. THE PROFILE SHALL EXTEND A MINIMUM OF 500' EACH DIRECTION FROM ENTRANCE CENTERLINE.

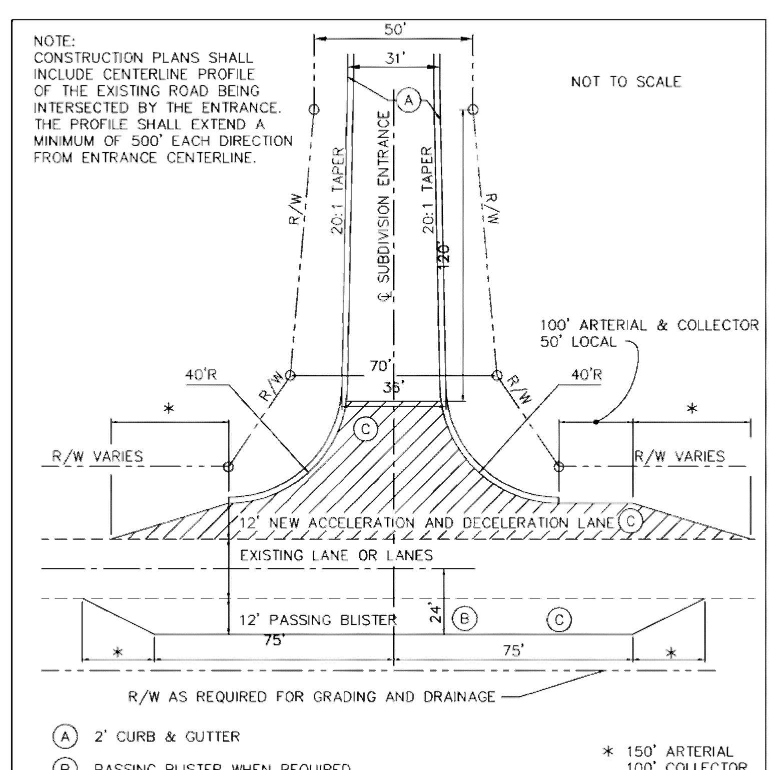

(A) 2' CURB & GUTTER
(B) PASSING BLISTER WHEN REQUIRED
(C) LANE WIDENING SHALL MATCH EXIST. PAVEMENT SURFACE TYPE

* 150' ARTERIAL
100' COLLECTOR
75' LOCAL

MINIMUM SUBDIVISION ENTRANCE FROM A THOROUGHFARE

TOWN OF WESTFIELD, INDIANA

Renée Lynn Goff 10/9/06 DATE — FIGURE G-13

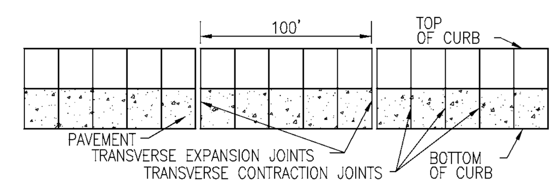

CURB JOINT DETAIL
(NO SCALE)

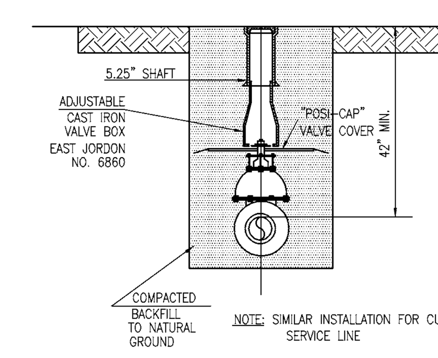

TYPICAL
VALVE BOX INSTALLATION
(NO SCALE)

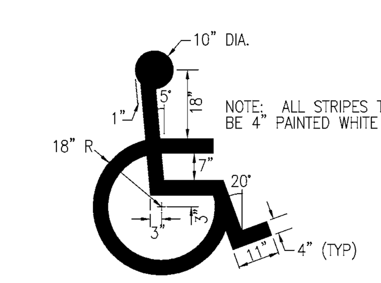

"ADA" PARKING
SYMBOL DETAIL
(NO SCALE)

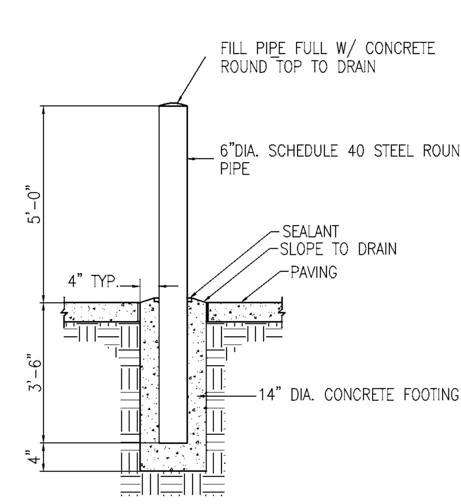

PIPE BOLLARD DETAIL
(NO SCALE)

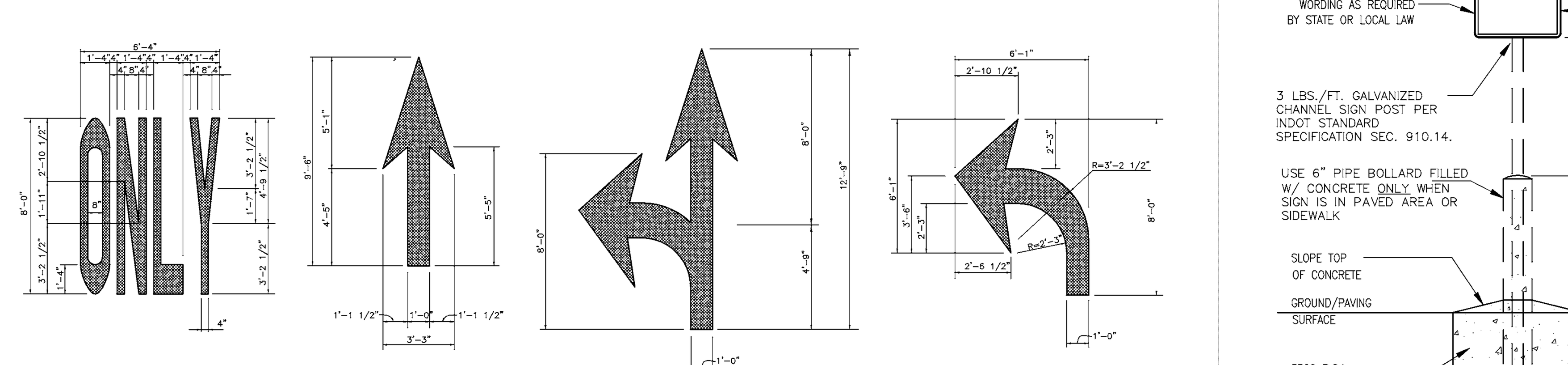

NOTE:
LANE CONTROL ARROWS SHALL BE WHITE AND SHALL BE PLACED IN ACCORDANCE WITH IMUTCD. THE ARROW SHOULD BE 20 FEET IN ADVANCE OF THE STOPLINE. THE WORD "ONLY" SHOULD BE LOCATED IN ADVANCE OF THE PAVEMENT ARROW.

TRAFFIC MARKING DETAILS
(NO SCALE)

NOTE:
TYPICAL SIZES FOR NORMAL INSTALLATION; SIZES MAY BE REDUCED APPROXIMATELY ONE-THIRD FOR LOW-SPEED URBAN CONDITIONS.

ALL SIGNS SHALL COMPLY WITH U.S. DEPARTMENT OF TRANSPORTATION, FEDERAL HIGHWAY ADMINISTRATION'S "MANUAL OF UNIFORM TRAFFIC CONTROL DEVICES",LOCAL CODES AND AS SPECIFIED. MOUNT SIGNS TO POST IN ACCORDANCE WITH MANUFACTURER'S INSTRUCTIONS.

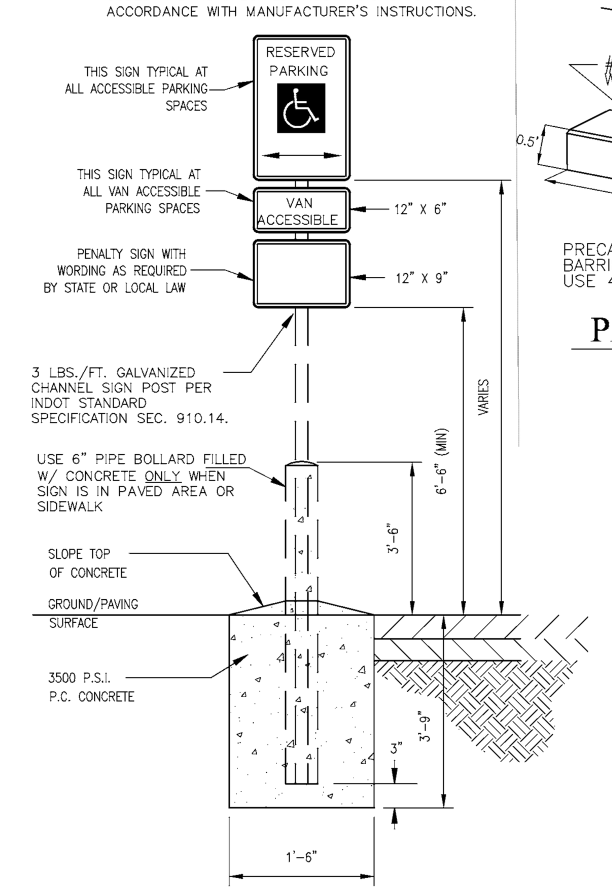

'ADA' SIGN BOLLARD
MOUNT DETAIL
(NO SCALE)

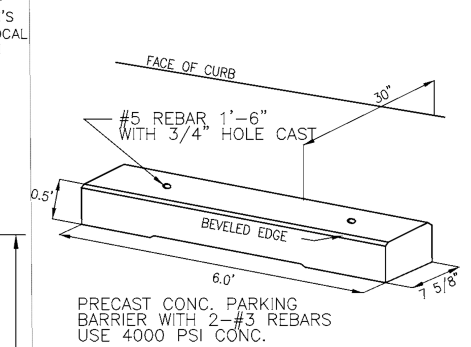

PRECAST CONC. PARKING BARRIER WITH 2-#3 REBARS USE 4000 PSI CONC.

PARKING BARRIER
(NO SCALE)

Know what's **below.**
Call before you dig.

Within Indiana Call
811 or 800-382-5544
24 Hours a Day, 7 Days a Week.

PER INDIANA STATE LAW IC 8-1-26. IT IS AGAINST THE LAW TO EXCAVATE WITHOUT NOTIFYING THE UNDERGROUND LOCATION SERVICE TWO (2) WORKING DAYS BEFORE COMMENCING WORK.

PREPARED FOR:
EPIPHANY EVANGELICAL LUTHERAN CHURCH PHASE ONE

156TH AND DITCH ROAD, WESTFIELD IN

SITE LAYOUT DETAILS

Part of the SE Corner of SW/1/4 of Section 10, Township 18 North, Range 3 East, Washington Township, Hamilton County, Indiana

SHEET NO. C202

PROJECT NO. W12.0262

LOCATION: H:\2012\w120262\Engineering\design\conset\120262-C201 det.dwg
LAYOUT: C202 – SITE DETAILS
DATE/TIME: August 24, 2012 – 12:10pm
PLOTTED BY: cartere

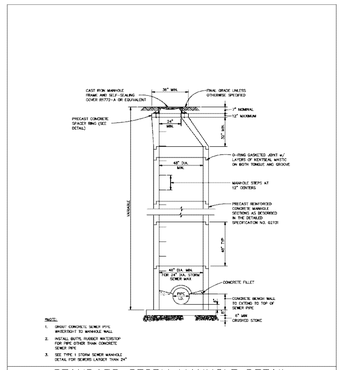

STANDARD STORM MANHOLE DETAIL

TOWN OF WESTFIELD, INDIANA

4/10/06 DATE — FIGURE ST-1

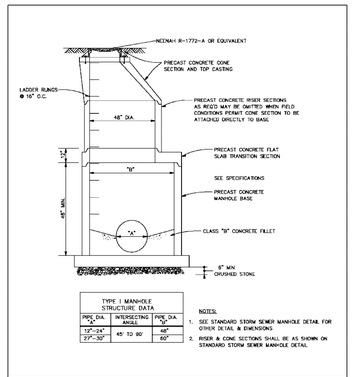

TYPE 1 MANHOLE STRUCTURE DATA			
PIPE DIA. "A"	INTERSECTING ANGLE	PIPE DIA. "B"	
12"–24"	45° TO 90°	48"	
27"–30"		60"	

NOTES:
1. SEE STANDARD STORM SEWER MANHOLE DETAIL FOR OTHER DETAIL & DIMENSIONS.
2. RISER & CONE SECTIONS SHALL BE AS SHOWN ON STANDARD STORM SEWER MANHOLE DETAIL

TYPE 1 STORM SEWER MANHOLE DETAIL

CITY OF WESTFIELD, INDIANA

FIGURE ST-2

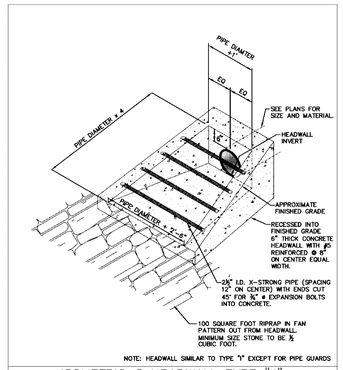

NOTE: HEADWALL SIMILAR TO TYPE "I" EXCEPT FOR PIPE GUARDS

ISOMETRIC @ HEADWALL TYPE "II"

TOWN OF WESTFIELD, INDIANA

4/10/06 DATE — FIGURE ST-6

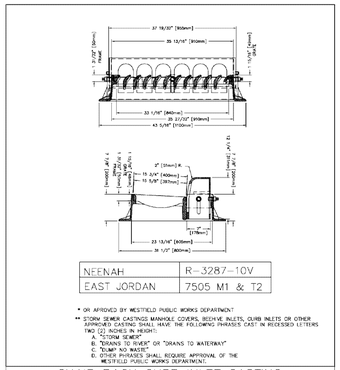

NEENAH	R-3287-10V
EAST JORDAN	7505 M1 & T2

* OR APPROVED BY WESTFIELD PUBLIC WORKS DEPARTMENT.
** STORM SEWER CASTINGS MANHOLES, BEEHIVE INLETS, CURB INLETS OR OTHER APPROVED CASTING SHALL HAVE THE FOLLOWING PHRASES CAST IN RECESSED LETTERS TWO (2) INCHES IN HEIGHT:
A. "STORM SEWER"
B. "DRAINS TO RIVER" OR "DRAINS TO WATERWAY"
C. "DUMP NO WASTE"
D. OTHER PHRASES SHALL REQUIRE APPROVAL OF THE WESTFIELD PUBLIC WORKS DEPARTMENT.

CHAIR BACK CURB INLET CASTING

TOWN OF WESTFIELD, INDIANA

4/10/06 DATE — FIGURE ST-8

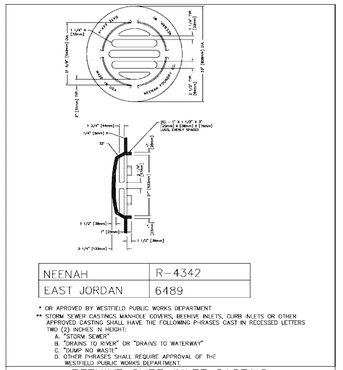
1 1/4" [31mm]
1 1/4" [31mm]
9 1/4" [234mm]
7" [178mm]
1 1/2" [38mm]
1 1/2" [38mm]
1 1/2" [38

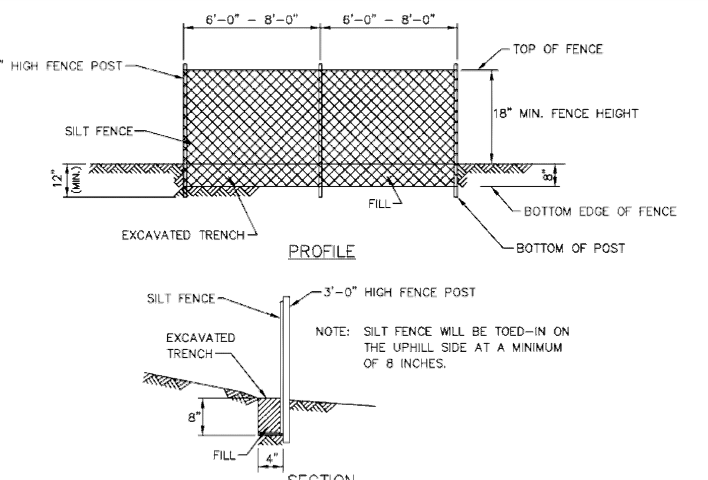

INSTALLATION PROCEDURE

1. 2" x 2" X 36" HARDWOOD OR STEEL FENCE POSTS ARE INSTALLED 6' APART (w/ EXTRA STRENGTH FABRIC WITHOUT WIRE BACKING) OR 8' APART (w/ WIRE BACKING), ON A SLIGHT ANGLE TOWARD THE ANTICIPATED RUNOFF SOURCE.
2. A TRENCH 4" WIDE BY 8" DEEP IS DUG ALONG THE UPHILL SIDE OF THE FENCE LINE.
3. THE SILT FENCE IS UNROLLED AND LAID OUT ALONG THE FENCE LINE.
4. A BUILT-IN ATTACHMENT CORD RUNS THROUGHOUT THE FULL LENGTH OF EACH 150 LINEAR FOOT ROLL. ONE END OF THE ROLL HAS APPROXIMATELY 5' OF CORD. THE OTHER END HAS APPROXIMATELY 20' OF CORD. THE END WITH 5' OF CORD IS WRAPPED AROUND THE FIRST POST AND SECURED.
5. THE FENCE IS PULLED TO THE NEXT POST AND A 1.5" SLIT IS MADE IN THE HEM DIRECTLY ABOVE THE CORD. THE CORD IS PULLED OUT OF THE HEM AND PULLED TAUT FROM THE PRECEDING POST AND WRAPPED TWICE AROUND THE POST.
6. THE SLITTING OF THE HEM ON EACH POST IS REPEATED UNTIL THE FINAL POST IS REACHED, AT WHICH TIME THE MATERIAL IS WRAPPED AROUND THE LAST POST AND SECURED WITH THE ENCLOSED CORD.
7. AT THIS TIME THE LOWER 8" OF THE FENCE IS LAID IN THE TRENCH AND CURLED TOWARD THE EROSION SOURCE. THE TRENCH IS THEN BACKFILLED WITH SOIL.

SILT FENCE DETAIL

TOWN OF WESTFIELD, INDIANA

Renée Lynn Goff 4/10/06 DATE

FIGURE EC-4

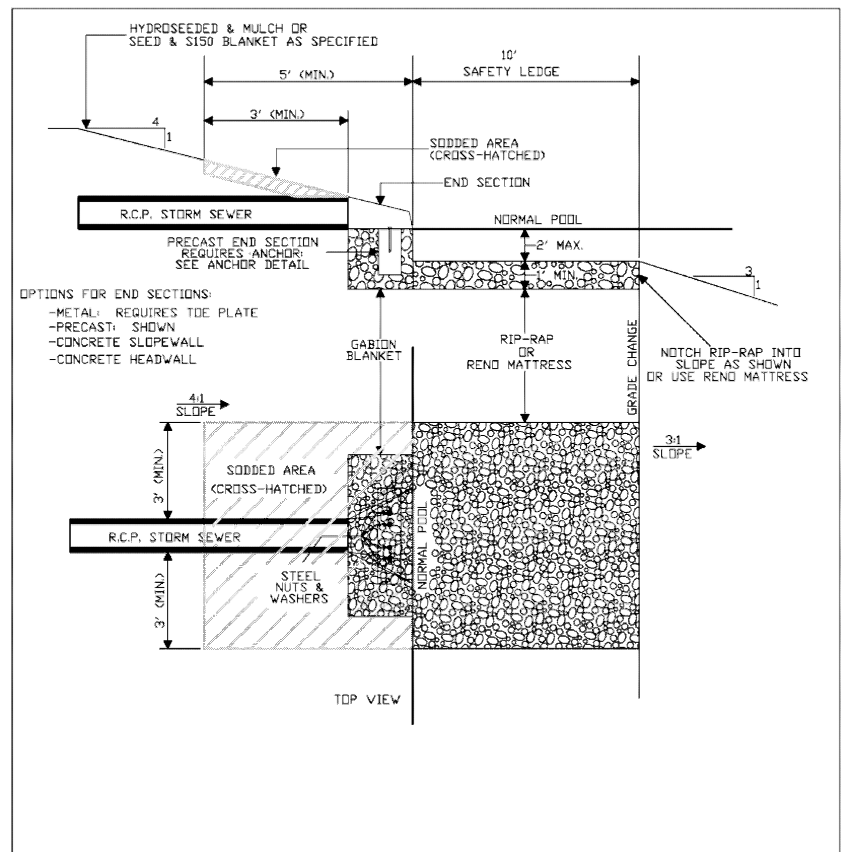

LAKE OUTLET DETAIL FOR LAKE CROSS-SECTION OPTION 2

TOWN OF WESTFIELD, INDIANA

Renée Lynn Goff 4/10/06 DATE

FIGURE ST-27

OPEN LOW-MAINTENANCE AREAS (REMAINING IDLE MORE THAN SIX MONTHS)

SEED MIXTURES	RATE PER ACRE PURE LIVE SEED	OPTIMUM SOIL PH
1. PERENNIAL RYEGRASS – WHITE CLOVER	70 LBS. 2 LBS.	5.6 TO 7.0
2. PERENNIAL RYEGRASS – TALL FESCUE	70 LBS. 50 LBS.	5.6 TO 7.0
3. TALL FESCUE – WHITE CLOVER	70 LBS. 2 LBS.	5.5 TO 7.5

STEEP BANKS AND CUTS, LOW-MAINTENANCE AREAS (NOT MOWED)

SEED MIXTURES	RATE PER ACRE PURE LIVE SEED	OPTIMUM SOIL PH
1. SMOOTH BROME GRASS – RED CLOVER	35 LBS. 20 LBS.	5.5 TO 7.0
2. TALL FESCUE – WHITE CLOVER	50 LBS. 2 LBS.	5.5 TO 7.5
3. TALL FESCUE – RED CLOVER	50 LBS. 20 LBS.	5.5 TO 7.5
4. ORCHARD GRASS – RED CLOVER – WHITE CLOVER	30 LBS. 20 LBS. 2 LBS.	5.6 TO 7.0
5. CROWNVETCH – TALL FESCUE	12 LBS. 30 LBS.	5.6 TO 7.0

LAWNS AND HIGH-MAINTENANCE AREAS

SEED MIXTURES	RATE PER ACRE PURE LIVE SEED	OPTIMUM SOIL PH
1. BLUEGRASS	140 LBS.	5.5 TO 7.0
2. PERENNIAL RYEGRASS (TURF TYPE)	60 LBS. 90 LBS.	5.6 TO 7.0
3. TALL FESCUE (TURF TYPE) – BLUEGRASS	170 LBS. 30 LBS.	5.6 TO 7.5

CHANNELS AND AREAS OF CONCENTRATED FLOW

SEED MIXTURES	RATE PER ACRE PURE LIVE SEED	OPTIMUM SOIL PH
1. PERENNIAL RYEGRASS – WHITE	150 LBS. 2 LBS.	5.5 TO 7.0
2. KENTUCKY BLUEGRASS – SMOOTH BROMEGRASS – SWITCHGRASS – TIMOTHY – PERENNIAL RYEGRASS – WHITE CLOVER	20 LBS. 10 LBS. 3 LBS. 4 LBS. 10 LBS. 2 LBS.	5.5 TO 7.5
3. TALL FESCUE – WHITE CLOVER	150 LBS. 2 LBS.	5.5 TO 7.5
4. TALL FESCUE – PERENNIAL RYEGRASS – KENTUCKY BLUEGRASS	150 LBS. 20 LBS. 20 LBS.	5.5 TO 7.5

GENERAL NOTES

1. PREPARE SOIL BEFORE INSTALLING BLANKETS, INCLUDING APPLICATION OF LIME, FERTILIZER AND SEED.
2. BEGIN AT THE TOP OF THE CHANNEL BY ANCHORING THE BLANKET IN A 6" DEEP x 6" WIDE TRENCH. BACKFILL AND COMPACT THE TRENCH AFTER STAPLING.
3. ROLL CENTER BLANKET IN DIRECTION OF WATER FLOW ON BOTTOM OF CHANNEL.
4. PLACE BLANKETS END OVER END (SHINGLE STYLE) WITH A 6" OVERLAP. USE A DOUBLE ROW OF STAGGERED STAPLES 4" APART TO SECURE BLANKETS.
5. FULL LENGTH EDGE OF BLANKETS AT TOP OF SIDE SLOPES MUST BE ANCHORED IN 6" DEEP x 6" WIDE TRENCH. BACKFILL AND COMPACT THE TRENCH AFTER STAPLING.
6. BLANKETS ON SIDE SLOPES MUST BE OVERLAPPED 4" OVER THE CENTER BLANKET AND STAPLED.
7. IN MEDIUM/HIGH FLOW CHANNEL APPLICATIONS, A STAPLE CHECK SLOT IS RECOMMENDED AT 30 TO 40 FOOT INTERVALS. USE A ROW OF STAPLES 4" APART OVER ENTIRE WIDTH OF THE CHANNEL. PLACE A SECOND ROW 4" BELOW THE FIRST ROW IN A STAGGERED PATTERN.
8. THE TERMINAL END OF THE BLANKETS MUST BE ANCHORED IN A 6" DEEP x 6" WIDE TRENCH. BACKFILL AND COMPACT THE TRENCH AFTER STAPLING.

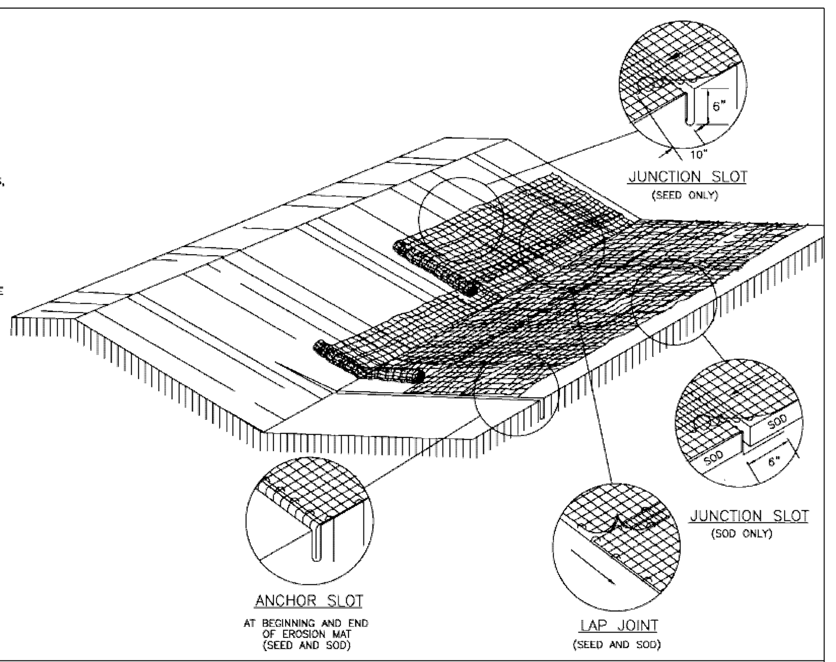

EROSION CONTROL MAT – SLOPE DETAIL

TOWN OF WESTFIELD, INDIANA

Renée Lynn Goff 4/10/06 DATE

FIGURE EC-2

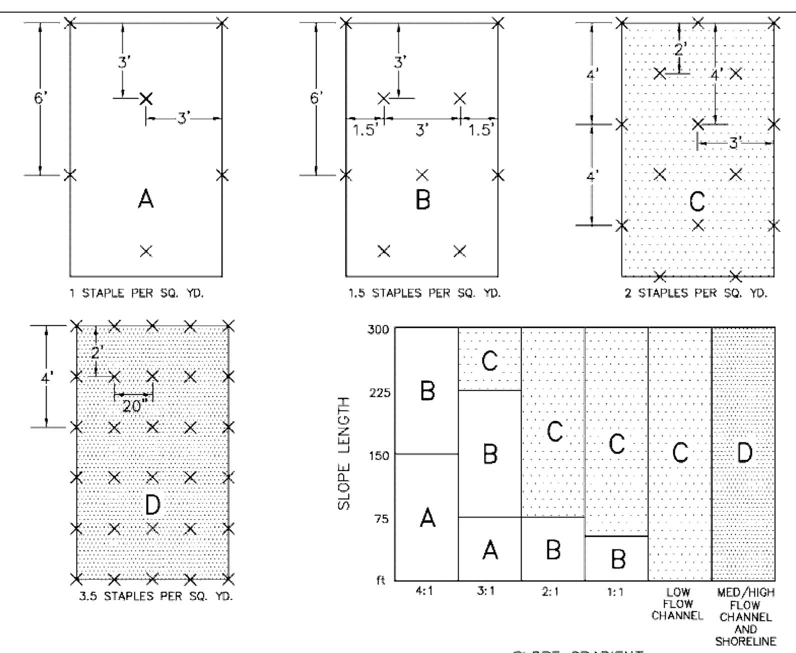

EROSION CONTROL MAT – STAPLE GUIDE

TOWN OF WESTFIELD, INDIANA

Renée Lynn Goff 4/10/06 DATE

FIGURE EC-3

NOTES:
1. AN OAT OR WHEAT COMPANION OR NURSE CROP MAY BE USED WITH ANY OF THE ABOVE PERMANENT SEEDING MIXTURES, AT THE FOLLOWING RATES:
(A) SPRING OATS – ONE-FOURTH TO THREE-FOURTHS BUSHEL PER ACRE
(B) WHEAT – NO MORE THAN ONE-HALF BUSHEL PER ACRE
2. A HIGH POTENTIAL FOR FERTILIZER, SEED, AND MULCH TO WASH EXISTS ON STEEP BANKS, CUTS, AND IN CHANNELS AND AREAS OF CONCENTRATED

INSTALLATION
1. GRADE THE SITE TO ACHIEVE POSITIVE DRAINAGE.
2. ADD TOPSOIL OR COMPOST MULCH TO ACHIEVE NEEDED DEPTH FOR ESTABLISHMENT OF VEGETATION. (COMPOST MATERIAL MAY BE ADDED TO IMPROVE SOIL MOISTURE HOLDING CAPACITY, SOIL FRIABILITY, AND NUTRIENT AVAILABILITY.)

SEEDBED PREPARATION
1. TEST SOIL TO DETERMINE PH AND NUTRIENT LEVELS.
2. APPLY SOIL AMENDMENTS AS RECOMMENDED BY THE SOIL TEST AND WORK INTO THE UPPER TWO TO FOUR INCHES OF SOIL. IF TESTING IS NOT DONE, APPLY 400 TO 600 POUNDS PER ACRE OF 12-12-12 ANALYSIS FERTILIZER, OR EQUIVALENT.
3. TILL THE SOIL TO OBTAIN A UNIFORM SEEDBED. USE A DISK OR RAKE, OPERATED ACROSS THE SLOPE, TO WORK THE SOIL AMENDMENTS INTO THE UPPER TWO TO FOUR INCHES OF THE SOIL.

SEEDING
OPTIMUM SEEDING DATES ARE MARCH 1 TO MAY 10 AND AUGUST 10 TO SEPTEMBER 30. PERMANENT SEEDING DONE BETWEEN MAY 10 AND AUGUST 10 MAY NEED TO BE IRRIGATED. SEEDING OUTSIDE OR BEYOND OPTIMUM SEEDING DATES IS STILL POSSIBLE WITH THE UNDERSTANDING THAT RESEEDING OR OVERSEEDING MAY BE REQUIRED IF ADEQUATE SURFACE COVER IS NOT ACHIEVED. RESEEDING OR OVERSEEDING CAN BE EASILY ACCOMPLISHED IF THE SOIL SURFACE REMAINS WELL PROTECTED WITH MULCH.
1. SELECT A SEEDING MIXTURE AND RATE FROM TABLE 1. SELECT SEED MIXTURE BASED ON SITE CONDITIONS, SOIL PH, INTENDED LAND USE, AND EXPECTED LEVEL OF MAINTENANCE.
2. APPLY SEED UNIFORMLY WITH A DRILL OR CULTIPACKER SEEDER OR BY BROADCASTING. PLANT OR COVER THE SEED TO A DEPTH OF ONE-FOURTH TO ONE-HALF INCH. IF DRILLING OR BROADCASTING THE SEED, ENSURE GOOD SEED-TO-SOIL CONTACT BY FIRMING THE SEEDBED WITH A ROLLER OR CULTIPACKER AFTER COMPLETING SEEDING OPERATIONS. (IF SEEDING IS DONE WITH A HYDROSEEDER, FERTILIZER AND MULCH CAN BE APPLIED WITH THE SEED IN A SLURRY MIXTURE.)
3. MULCH ALL SEEDED AREAS AND USE APPROPRIATE METHODS TO ANCHOR THE MULCH IN PLACE. CONSIDER USING EROSION CONTROL BLANKETS ON SLOPING AREAS AND CONVEYANCE CHANNELS

MAINTENANCE
- INSPECT WITHIN 24 HOURS OF EACH RAIN EVENT AND AT LEAST ONCE EVERY SEVEN CALENDAR DAYS UNTIL THE VEGETATION IS SUCCESSFULLY ESTABLISHED.
- CHARACTERISTICS OF A SUCCESSFUL STAND INCLUDE VIGOROUS DARK GREEN OR BLUISHGREEN SEEDLINGS WITH A UNIFORM VEGETATIVE COVER DENSITY OF 90 PERCENT OR MORE.
- CHECK FOR EROSION OR MOVEMENT OF MULCH.
- REPAIR DAMAGED, BARE, GULLIED, OR SPARSELY VEGETATED AREAS AND THEN FERTILIZE, RESEED, AND APPLY AND ANCHOR MULCH.
- IF PLANT COVER IS SPARSE OR PATCHY, EVALUATE THE PLANT MATERIALS CHOSEN, SOIL FERTILITY, MOISTURE CONDITION, AND MULCH APPLICATION; REPAIR AFFECTED AREAS EITHER BY OVERSEEDING OR PREPARING A NEW SEEDBED AND RESEEDING. APPLY AND ANCHOR MULCH ON THE NEWLY SEEDED AREAS.
- IF VEGETATION FAILS TO GROW, CONSIDER SOIL TESTING TO DETERMINE SOIL PH OR NUTRIENT DEFICIENCY PROBLEMS. (CONTACT YOUR SOIL AND WATER CONSERVATION DISTRICT OR COOPERATIVE EXTENSION OFFICE FOR ASSISTANCE.)
- IF ADDITIONAL FERTILIZATION IS NEEDED TO GET A SATISFACTORY STAND, DO SO ACCORDING TO SOIL TEST RECOMMENDATIONS.
- ADD FERTILIZER THE FOLLOWING GROWING SEASON. FERTILIZE ACCORDING TO SOIL TEST RECOMMENDATIONS.
- FERTILIZE TURF AREAS ANNUALLY. APPLY FERTILIZER IN A SPLIT APPLICATION. FOR COOL-SEASON GRASSES, APPLY ONE-HALF OF THE FERTILIZER IN LATE SPRING AND ONE HALF IN EARLY FALL. FOR WARM-SEASON GRASSES, APPLY ONE-THIRD IN EARLY SPRING, ONE-THIRD IN LATE SPRING, AND THE REMAINING ONE-THIRD IN MIDDLE SUMMER.

TABLE 1. PERMANENT SEEDING RECOMMENDATIONS
THIS TABLE PROVIDES SEVERAL SEED MIXTURE OPTIONS. ADDITIONAL SEED MIXTURES ARE AVAILABLE COMMERCIALLY. WHEN SELECTING A MIXTURE, CONSIDER INTENDED LAND USE AND SITE CONDITIONS, INCLUDING SOIL PROPERTIES (E.G., SOIL PH AND DRAINAGE), SLOPE ASPECT, AND THE TOLERANCE OF EACH SPECIES TO SHADE AND DROUGHT.

REFERENCE IN CHAPTER 7 PAGES 35-40 IN THE INDIANA STORM WATER QUALITY MANUAL

PERMANENT SEED

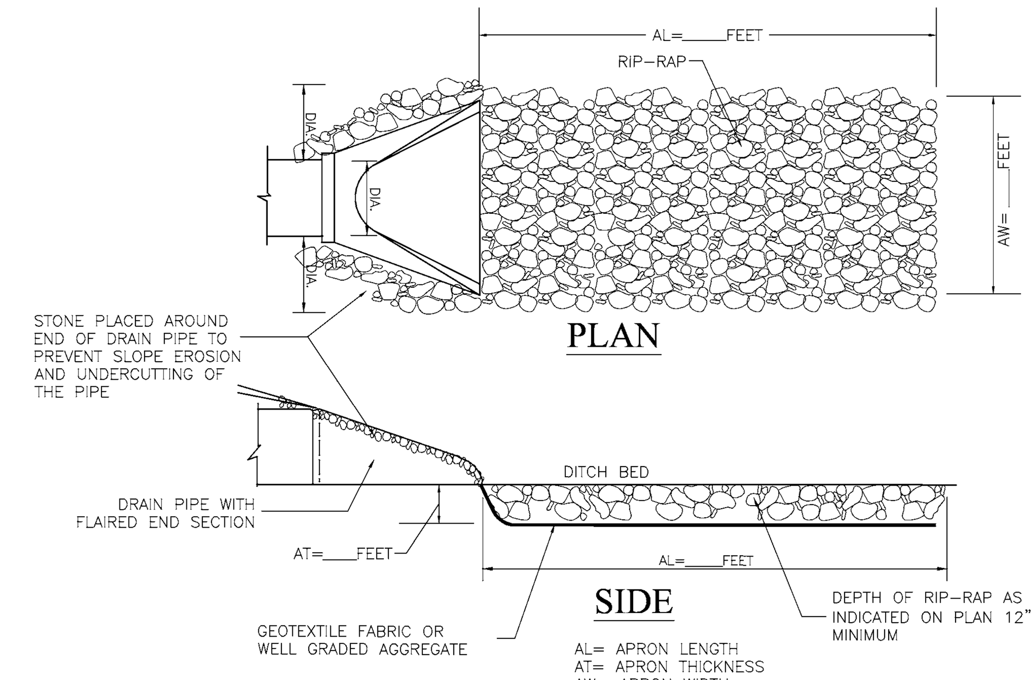

AT=1.5' X D50 15" OR LESS, 1.2' X D50 15" OR LARGER STONE.

TABLE 1. SIZING FOR FLOW DISSIPATERS AT CULVERT PIPE OUTLETS

PIPE SIZE	AVERAGE RIPRAP DIAMETER (D50)	APRON WIDTH	APRON LENGTH
8 IN.	3 IN.	2 TO 3 FEET	5 TO 7 FEET
12 IN.	5 IN.	3 TO 4 FEET	6 TO 12 FEET
18 IN.	8 IN.	4 TO 6 FEET	8 TO 18 FEET
24 IN.	10 IN.	6 TO 8 FEET	12 TO 22 FEET
30 IN.	12 IN.	8 TO 10 FEET	14 TO 28 FEET
36 IN.	14 IN.	10 TO 12 FEET	16 TO 32 FEET

ENERGY DISSIPATER (OUTLET PROTECTION)
1. DIVERT SURFACE WATER RUNOFF AROUND THE STRUCTURE DURING CONSTRUCTION SO THAT THE SITE CAN BE PROPERLY DEWATERED FOR FOUNDATION PREPARATION.
2. EXCAVATE FOUNDATION AND APRON AREA SUBGRADES BELOW DESIGN ELEVATION TO ALLOW FOR THICKNESS OF THE FILTER MEDIUM AND RIPRAP.
3. COMPACT ANY FILL USED IN SUBGRADE PREPARATION TO THE DENSITY OF SURROUNDING UNDISTURBED SOIL MATERIAL.
4. SMOOTH SUBGRADE ENOUGH TO PROTECT GEOTEXTILE FABRIC FROM TEARING.
5. PLACE GEOTEXTILE FABRIC OR AGGREGATE BEDDING MATERIAL (FOR STABILIZATION AND FILTRATION) ON THE COMPACTED AND SMOOTHED FOUNDATION.
6. INSTALL RIPRAP TO THE LINES AND ELEVATIONS SHOWN IN THE CONSTRUCTION PLANS. BLEND RIPRAP SMOOTHLY TO SURROUNDING GRADE. IF THE CHANNEL IS WELL DEFINED, EXTEND THE APRON ACROSS THE CHANNEL BOTTOM AND UP THE CHANNEL BANKS TO AN ELEVATION OF SIX INCHES ABOVE THE MAXIMUM TAILWATER DEPTH OR TO THE TOP OF THE BANK, WHICHEVER IS LESS.
7. IF GEOTEXTILE FABRIC TEARS WHEN PLACING RIPRAP, REPAIR IMMEDIATELY BY LAYING AND STAPLING A PIECE OF FABRIC OVER DAMAGED AREA, OVERLAPPING THE UNDAMAGED AREAS BY AT LEAST 12 INCHES.
8. CONSTRUCT A SMALL PLUNGE POOL WITHIN THE OUTLET APRON. (RIPRAP APRONS MUST BE LEVEL WITH OR SLIGHTLY LOWER THAN THE RECEIVING CHANNEL AND SHOULD NOT PRODUCE AN OVERFALL OR RESTRICT FLOW OF THE WATER CONVEYANCE STRUCTURE.)

MAINTENANCE
_ INSPECT WITHIN 24 HOURS OF A RAIN EVENT AND AT LEAST ONCE EVERY SEVEN CALENDAR DAYS.
_ INSPECT FOR STONE DISPLACEMENT; REPLACE STONES ENSURING PLACEMENT AT FINISHED GRADE.
_ CHECK FOR EROSION OR SCOURING AROUND SIDES OF THE APRON; REPAIR IMMEDIATELY.
_ CHECK FOR PIPING OR UNDERCUTTING; REPAIR IMMEDIATELY.

REFERENCE IN CHAPTER 7 PAGE 121 IN THE INDIANA STORM WATER QUALITY MANUAL

OUTLET EROSION CONTROL PROTECTION

(NO SCALE)

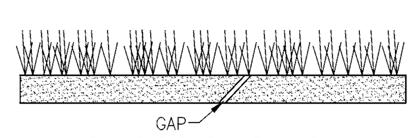

CROSS SECTION

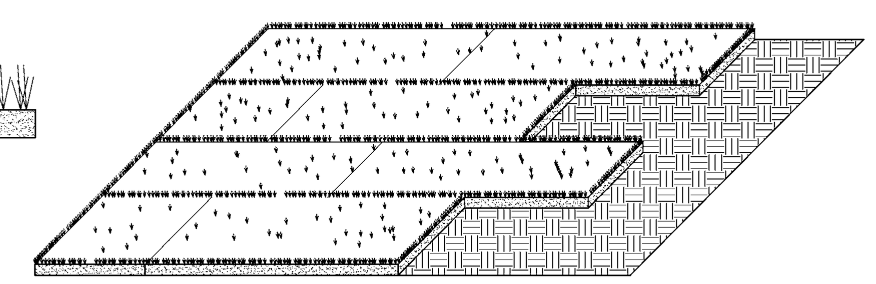

PERSPECTIVE VIEW

(NO SCALE)

SPECIFICATIONS:

SITE PREPARATION
_ GRADE THE SITE TO ACHIEVE POSITIVE DRAINAGE.
_ PREPARE A SMOOTH, FIRM SOIL SURFACE AND APPLY SOIL AMENDMENTS. IRRIGATION IRRIGATE AS NEEDED TO ENSURE ROOTING OF SOD.

MATERIALS
_ SOIL AMENDMENTS – SELECT MATERIALS AND RATES AS DETERMINED BY A SOIL TEST (CONTACT YOUR COUNTY SOIL AND WATER CONSERVATION DISTRICT OR COOPERATIVE EXTENSION OFFICE FOR ASSISTANCE AND SOIL INFORMATION, INCLUDING AVAILABLE SOIL TESTING SERVICES.) OR 400 TO 600 POUNDS OF 12-12-12 ANALYSIS FERTILIZER, OR EQUIVALENT.
_ SOD – SELECT A HIGH QUALITY, HEALTHY, VIGOROUS VARIETY WELL ADAPTED TO THE REGION AND COMPATIBLE WITH THE INTENDED USE.

INSTALLATION
SOD SHOULD NOT BE INSTALLED DURING HOT WEATHER, ON DRY SOIL, FROZEN SOIL, COMPACTED CLAY, LOOSE SAND OR GRAVELLY SUBSTRATE SOILS, AGGREGATE, OR PESTICIDE TREATED SOIL. THE IDEAL TIME TO LAY SOD IS MAY 1 TO JUNE 1 OR SEPTEMBER 1 TO SEPTEMBER 30, ALTHOUGH IT CAN BE INSTALLED AS EARLY AS MARCH 15 IF AVAILABLE OR JUNE 1 TO SEPTEMBER 1 IF IRRIGATED.

SITE PREPARATION
1. APPLY TOPSOIL IF EXISTING SOIL CONDITIONS ARE UNSUITABLE FOR ESTABLISHING VEGETATION.
2. GRADE THE SITE TO ACHIEVE POSITIVE DRAINAGE AND CREATE A SMOOTH, FIRM SOIL SURFACE.
3. WHERE APPLICABLE, USE A CHISEL PLOW, DISK, HARROW, OR RAKE TO BREAK UP COMPACTED SOILS AND CREATE A FAVORABLE ROOTING DEPTH OF SIX TO EIGHT INCHES.

SOD BED PREPARATION
1. TEST SOIL TO DETERMINE PH AND NUTRIENT LEVELS.
2. IF SOIL PH IS TOO ACIDIC FOR THE GRASS SOD TO BE INSTALLED, APPLY LIME ACCORDING TO SOIL TEST RESULTS OR AT THE RATE RECOMMENDED BY THE SOD SUPPLIER.
3. APPLY FERTILIZER AS RECOMMENDED BY THE SOIL TEST. IF TESTING WAS NOT DONE, APPLY 400 TO 600 POUNDS PER ACRE OF 12-12-12 ANALYSIS FERTILIZER, OR EQUIVALENT.
4. WORK THE SOIL AMENDMENTS INTO THE UPPER TWO TO FOUR INCHES OF SOIL WITH A DISK OR RAKE OPERATED ACROSS THE SLOPE.
5. RAKE OR HARROW THE AREA TO ACHIEVE A SMOOTH FINAL GRADE AND THEN ROLL OR CULTIPACK THE SOIL SURFACE TO CREATE A FIRM SURFACE ON WHICH TO LAY THE SOD.

LAYING THE SOD
1. INSTALL SOD WITHIN THIRTY-SIX HOURS OF ITS CUTTING.
2. STORE THE SOD IN A SHADED LOCATION DURING INSTALLATION.
3. IMMEDIATELY BEFORE LAYING THE SOD, RAKE THE SOIL SURFACE TO BREAK ANY CRUST. (IF THE WEATHER IS HOT, LIGHTLY IRRIGATE THE SOIL SURFACE PRIOR TO LAYING THE SOD.)
4. LAY SOD STRIPS IN A BRICK-LIKE PATTERN.
5. BUTT ALL JOINTS TIGHTLY AGAINST EACH OTHER (DO NOT STRETCH OR OVERLAP THEM), USING A KNIFE OR MASON'S TROWEL TO TRIM AND FIT SOD INTO IRREGULARLY SHAPED AREAS.
6. ROLL THE SOD LIGHTLY AFTER INSTALLATION TO ENSURE FIRM CONTACT BETWEEN THE SOD AND SOIL.
7. IRRIGATE NEWLY SODDED AREAS UNTIL THE UNDERLYING SOIL IS WET TO A DEPTH OF FOUR INCHES, AND THEN KEEP MOIST UNTIL THE GRASS TAKES ROOT.

SLOPE APPLICATION
1. INSTALL THE SOD STRIPS WITH THE LONGEST DIMENSION PERPENDICULAR TO THE SLOPE.
2. WHERE SLOPES EXCEED A RATIO OF 3:1, STAPLE OR STAKE EACH STRIP AT THE CORNERS AND IN THE MIDDLE.

CHANNEL APPLICATION
(SODDING PROVIDES QUICKER PROTECTION THAN SEEDING AND MAY REDUCE THE RISK OF EARLY WASHOUT.)
1. EXCAVATE THE CHANNEL, ALLOWING FOR THE FULL THICKNESS OF THE SOD.
2. LAY THE SOD STRIPS WITH THE LONGEST DIMENSION PERPENDICULAR TO CHANNEL FLOW.
3. STAPLE OR STAKE EACH STRIP OF SOD AT THE CORNERS AND IN THE MIDDLE.
4. STAPLE JUTE OR BIODEGRADABLE POLYPROPYLENE NETTING OVER THE SODDED AREA TO MINIMIZE THE POTENTIAL FOR WASHOUT DURING ESTABLISHMENT.

MAINTENANCE
_ INSPECT WITHIN 24 HOURS OF EACH RAIN EVENT AND AT LEAST ONCE EVERY SEVEN CALENDER DAYS UNTIL SOD IS WELL ROOTED.
_ KEEP SOD MOIST UNTIL FULLY ROOTED.
_ AFTER SOD IS WELL-ROOTED (TWO TO THREE WEEKS), MAINTAIN A PLANT HEIGHT OF TWO TO THREE INCHES.
_ TIME MOWING TO AVOID RUTS IN TURF.
_ FERTILIZE TURF AREAS ANNUALLY. APPLY FERTILIZER IN A SPLIT APPLICATION. FOR COOLSEASON GRASSES, APPLY ONE-HALF OF THE FERTILIZER IN LATE SPRING AND ONE-HALF IN EARLY FALL. FOR WARM-SEASON GRASSES, APPLY ONE-THIRD IN EARLY SPRING, ONE-THIRD IN LATE SPRING AND ONE-THIRD IN MID-SUMMER.
REFERENCE IN CHAPTER 7 PAGES 47-50 IN THE INDIANA STORM WATER QUALITY MANUAL

SOD APPLICATION DETAIL

Know what's below. Call before you dig.
Within Indiana Call
811 or 800-382-5544
24 Hours a Day, 7 Days a Week.
PER INDIANA STATE LAW IC 8-1-26. IT IS AGAINST THE LAW TO EXCAVATE WITHOUT NOTIFYING THE UNDERGROUND LOCATION SERVICE TWO (2) WORKING DAYS BEFORE COMMENCING WORK.

10505 N. College Avenue
Indianapolis, Indiana 46280
weihe.net
317 | 846 - 6611
800 | 452 - 6408
317 | 843 - 0546 fax
ALLAN H. WEIHE, P.E., L.S. - FOUNDER
WEIHE ENGINEERS
Land Surveying | Civil Engineering
Landscape Architecture

PROJECT NO.: W12.0262
DWG NAME: 120262-C201 det.dwg
DESIGNED BY: EAC/MG
DRAWN BY: EAC/MG
CHECKED BY: JKS
DATE: 06.29.2012

DATE	BY	REVISIONS AND ISSUES
07/26/12	EAC/MG	50% CD SET
8/23/12	EAC	REVISIONS PER WESTFIELD REVIEW

APPROVAL PENDING NOT FOR CONSTRUCTION

JAMES K. SHINNEMAN P.E. 10200392

PREPARED FOR:
EPIPHANY EVANGELICAL LUTHERAN CHURCH PHASE ONE
156TH AND DITCH ROAD, WESTFIELD IN
SWPPP (PHASE II) DETAILS
Part of the SE Corner of SW/1/4 of Section 10, Township 18 North, Range 3 East, Washington Township, Hamilton County, Indiana

SHEET NO. C204

PROJECT NO. W12.0262

LOCATION: H:\2012\w120262\Engineering\design\conset\120262-C201 det.dwg
LAYOUT: C204 – SWPPP 2 DETAILS
DATE/TIME: August 24, 2012 – 12:10pm
PLOTTED BY: cartere

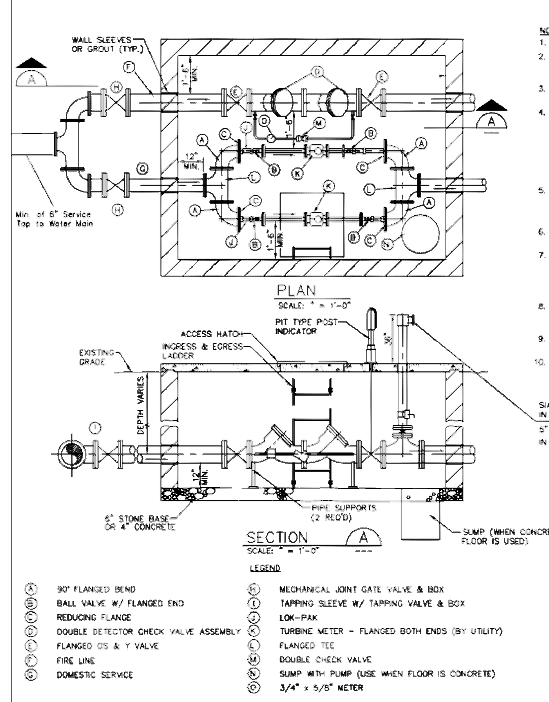

NOTES:
1. CUSTOMER SHALL CONSTRUCT METER VAULT.
2. CONSTRUCTION MATERIALS: CONCRETE, 8"x8"x16" CONCRETE BLOCKS AND MORTAR, OR PRECAST/ CAST-IN-PLACE AS DIRECTED BY WATER COMPANY.
3. INSIDE DIMENSIONS PER DRAWING NOTES. VAULT TO BE SET LENGTHWISE WITH SERVICE.
4. TOP OF VAULT TO BE CONCRETE, AT LEAST 4" THICK WITH REINFORCING. WHEN VAULT IS CONSTRUCTED IN PAVED AREAS, PAVEMENT IS TO BE LEVEL WITH TOP OF VAULT, AND THE TOP REINFORCED AS REQUIRED TO SUPPORT TRAFFIC LOADS. WHEN VAULT IS CONSTRUCTED IN GRASS PLOT, TOP OF VAULT SHALL CORRESPOND WITH FINISHED GRADE LEVEL OF SURROUNDING AREA.
5. BOTTOM OF VAULT TO BE MINIMUM OF 6" OF CRUSHED STONE OR 4" CONCRETE AS DIRECTED BY WATER COMPANY, WITH MINIMUM CLEARANCE OF 12" BELOW BOTTOM OF FIRE/SERVICE LINE.
6. CUSTOMER SHALL FURNISH 2" BALL VALVES ON OUTLET SIDE OF THE 2" METER SETTING.
7. CUSTOMER SHALL FURNISH DOUBLE DETECTOR CHECK VALVE AS APPROVED BY THE INDIANA DEPARTMENT OF ENVIRONMENTAL MANAGEMENT, WITH RESILIENT SEAL GATE VALVE ON OUTLET SIDE OF CHECK VALVE. METER IS FURNISHED BY WATER COMPANY.
8. CUSTOMER SHALL FURNISH VAULT FRAME AND LID TO BE INSTALLED IN TOP OF VAULT BY CUSTOMER (BILCO J-2AL OR 30"x30" ALUMINUM PCM)
9. CUSTOMER SHOULD INSTALL A LADDER IN PIT FOR INGRESS AND EGRESS, AS PER OSHA REQUIREMENTS.
10. A 2" TEST PLUG SHALL BE INSTALLED AT LEAST 2 PIPE DIAMETERS DOWNSTREAM OF 2" OR LARGER METERS.

SIAMESE FITTING WITH TWO 2 1/2" HOSE CONNECTORS IN WESTFIELD FIRE DEPT. DISTRICT
5" STORZ CONNECTION FOR HOSE CONNECTION IN NOBLESVILLE FIRE DEPT. DISTRICT

LEGEND
- (A) 90° FLANGED BEND
- (B) BALL VALVE W/ FLANGED END
- (C) REDUCING FLANGE
- (D) DOUBLE DETECTOR CHECK VALVE ASSEMBLY
- (E) FLANGED OS & Y VALVE
- (F) FIRE LINE
- (G) DOMESTIC SERVICE
- (H) MECHANICAL JOINT GATE VALVE & BOX
- (I) TAPPING SLEEVE W/ TAPPING VALVE & BOX
- (J) LOK-PAK
- (K) TURBINE METER - FLANGED BOTH ENDS (BY UTILITY)
- (L) FLANGED TEE
- (M) DOUBLE CHECK VALVE
- (N) SUMP WITH PUMP (USE WHEN FLOOR IS CONCRETE)
- (O) 3/4" x 5/8" METER

STANDARD FIRE SERVICE & METER VAULT

TOWN OF WESTFIELD, INDIANA
Renée Lynn Goff 10/9/06 DATE FIGURE W-13

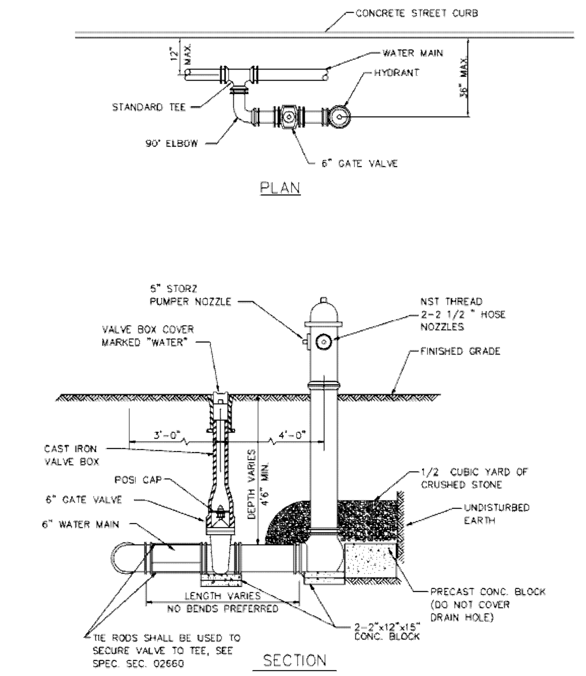

NOTE:
1. HYDRANTS SHALL BE THE MUELLER CENTURION, AS MANUFACTURED BY THE MUELLER CO. OR THE WATEREUS PACER, AS MANUFACTURED BY THE WATEREUS CO.
2. INTEGRAL CAP NUT AND LOWER WASHER SHALL BE EPOXY COATED.
3. SHOE SHALL BE FUSION BONDED EPOXY COATED INSIDE AND OUT.
4. WESTFIELD FIRE HYDRANTS SHALL BE MAB FIRE PROTECTION RED (7068) NOBLESVILLE FIRE HYDRANTS SHALL BE MAB CAUTION YELLOW (7077)

FIRE HYDRANT DETAILS

TOWN OF WESTFIELD, INDIANA
Renée Lynn Goff 10/9/06 DATE FIGURE W-7

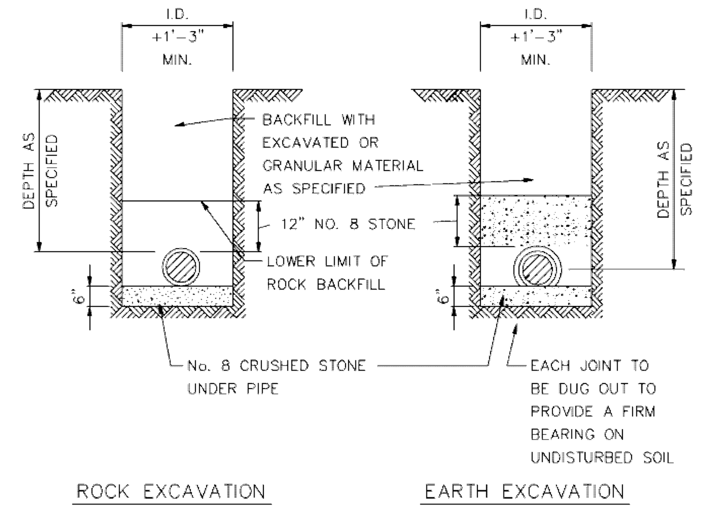

NOTE:
THIS DETAIL SHALL APPLY TO ALL SANITARY SEWER PIPE

SEWER PIPE BEDDING DETAIL

TOWN OF WESTFIELD, INDIANA
Renée Lynn Goff 10/9/06 DATE FIGURE S-5

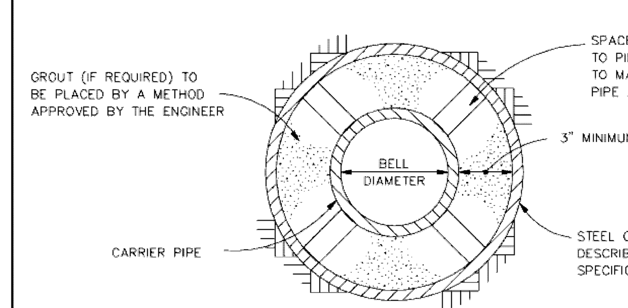

JACKING AND BORING DETAIL

TOWN OF WESTFIELD, INDIANA
Renée Lynn Goff 10/9/06 DATE FIGURE S-9

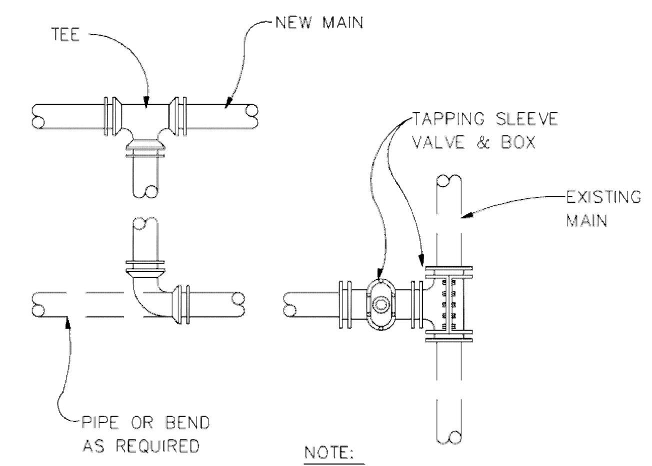

NOTE:
1. BENDS & FITTINGS AS REQUIRED SEE PLAN SHEETS FOR DETAILS
2. SEE FIGURES W-2 & W-3 FOR THRUST BLOCK AND RESTRAINED JOINT DETAILS.

CONNECTION TO EXISTING MAIN

TOWN OF WESTFIELD, INDIANA
Renée Lynn Goff 10/9/06 DATE FIGURE W-5

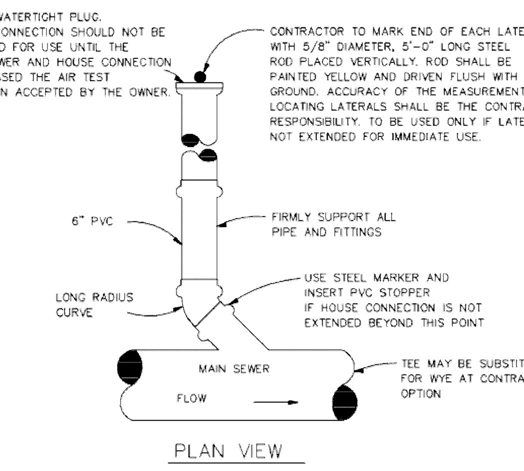

NOTES:
1. WYE BRANCHES OR TEES SHALL BE INSTALLED WHERE DESIRED BY PROPERTY OWNER OR WHERE INDICATED ON THE DRAWINGS. THEY SHALL BE EXTENDED TO PROPERTY LINE OF STREETS OR ALLEYS OR TO DISTANCES AS SHOWN ON THE DESIGN DRAWINGS AND SHALL BE OF 6" PVC SDR 35 UNLESS OTHERWISE SHOWN.
2. DEPTH AT PROPERTY LINE SHALL BE APPROXIMATELY 8'-0" UNLESS SEWER DEPTH IS LESS, IN WHICH EVENT A MINIMUM SLOPE OF 1/8" PER 1'-0" SHALL BE USED.
3. HOUSE SERVICE PIPE SHALL BE PVC SDR 35 CONFORMING TO ASTM D3034 WITH GASKETED JOINTS CONFORMING TO ASTM D3212 UNLESS OTHERWISE INDICATED.
4. HOUSE SERVICE PIPE SHALL BE INSTALLED PER SAME SPECIFICATIONS & DETAIL AS FOR MAIN LINE SEWER.

HOUSE/BUILDING SERVICE CONNECTION DETAIL 1

TOWN OF WESTFIELD, INDIANA
Renée Lynn Goff 10/9/06 DATE FIGURE S-10

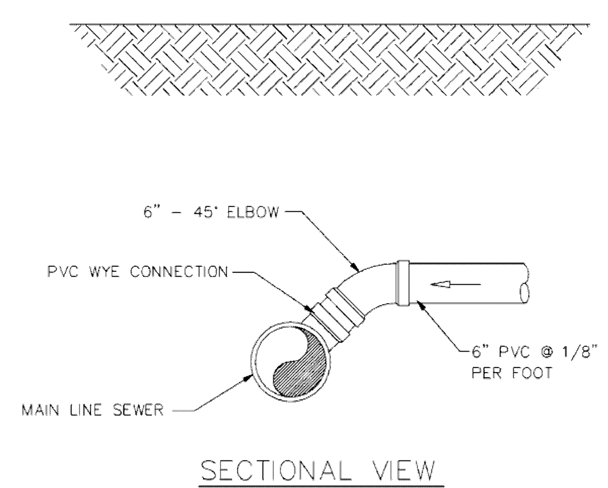

HOUSE/BUILDING SERVICE CONNECTION DETAIL 2

TOWN OF WESTFIELD, INDIANA
Renée Lynn Goff 10/9/06 DATE FIGURE S-11

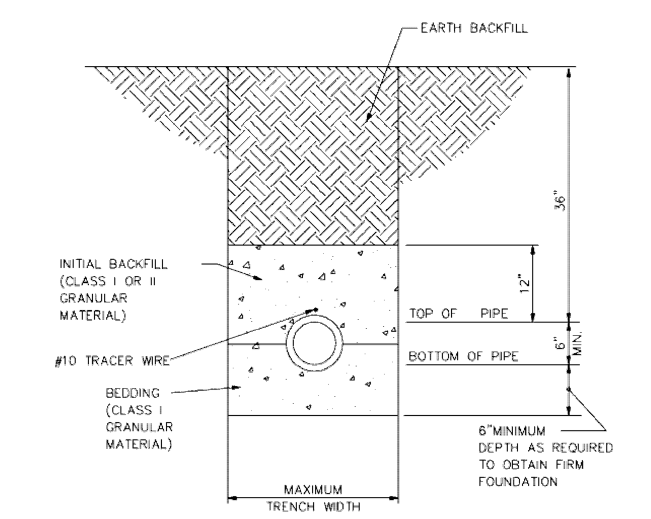

NOTES:
1. NOMINAL PIPE SIZE. (6" MIN.)
2. INSTALLATION OF FLEXIBLE PVC PIPE SHALL BE IN ACCORDANCE WITH SPECIFICATIONS CONTAINED IN ASTM D-2321
3. CLASS I GRANULAR MATERIAL SHALL BE 1/4" TO 1 1/2" GRADED STONE, PER ASTM D2321 (#8 CRUSH STONE)
4. CLASS II GRANULAR MATERIAL SHALL BE COARSE SANDS AND GRAVELS MAX. PARTIAL SIZE OF 3/4"
5. SEE FIGURE S-5 FOR MAIN LINE SEWERS PIPE BEDDING DETAILS.
6. #10 TRACER WIRE TO BE EXTENDED FROM SEWER MAIN TO 6" CLEANOUT RISER

HOUSE/BUILDING SERVICE BEDDING DETAILS

TOWN OF WESTFIELD, INDIANA
Renée Lynn Goff 10/9/06 DATE FIGURE S-12

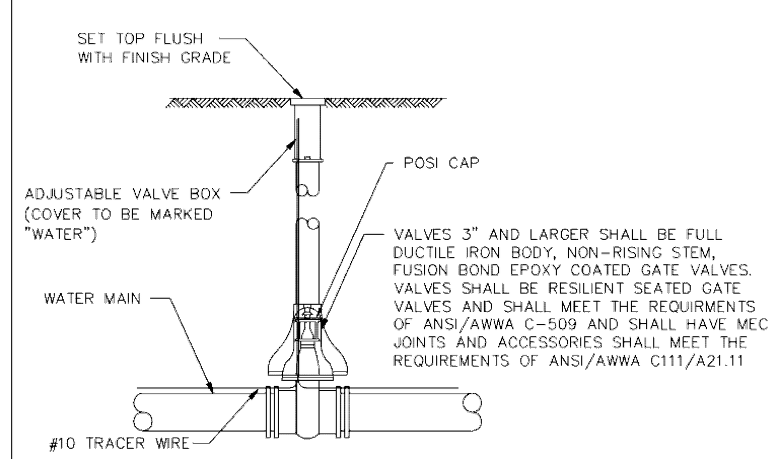

GATE VALVE AND BOX

TOWN OF WESTFIELD, INDIANA
Renée Lynn Goff 10/9/06 DATE FIGURE W-6

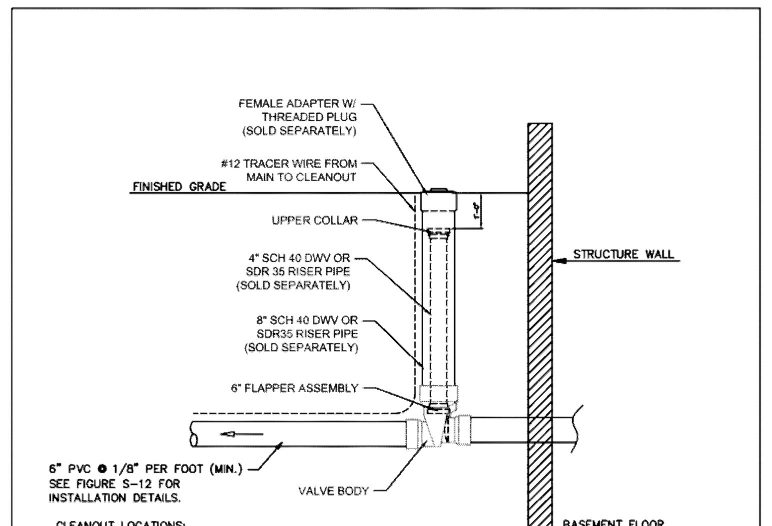

CLEANOUT LOCATIONS:
1. AT THE JUNCTION OF BUILDING DRAIN AND BUILDING SEWER (NEAR EXTERIOR FACE OF BUILDING)
2. IF BUILDING SEWER IS MORE THAN 100 FEET FROM MAIN LINE SEWER, CLEAN-OUTS SPACING SHALL NOT EXCEED 100 FEET.
3. A CLEANOUT IS REQUIRED AT EACH BEND THAT IS GREATER THAN 45 DEGREES.
4. THERE SHALL BE NO BASEMENT DRAINS CONNECTED TO SERVICE CONNECTION

CHECK VALVE REQUIREMENTS
1. ALL HOUSES ARE REQUIRED TO HAVE A CHECK VALVE
2. NO CHECK VALVES ARE TO BE LOCATED IN THE BASEMENT
3. USE RECTORSEAL, CANPLAS OR APPROVED EQUAL

GENERAL REQUIREMENTS
THE LOWEST FLOOR ELEVATION RECEIVING GRAVITY SERVICE MUST BE A MIN.THREE (3.0) FEET ABOVE TOP NEAREST MANHOLE RIM.

HOUSE/BUILDING SERVICE CLEAN-OUT/CHECK VALVE DETAIL

CITY OF WESTFIELD, INDIANA
Neil B. VanTrees 8/26/2011 FIGURE S-13

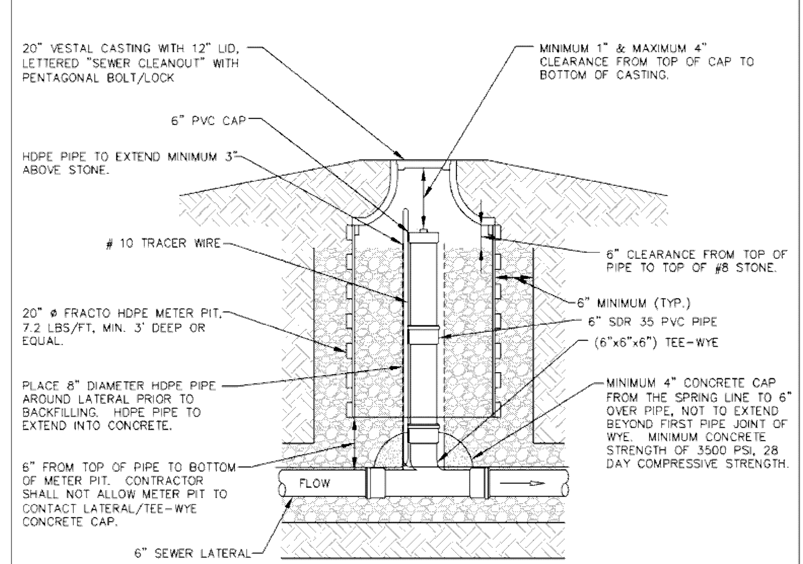

*WHEN REQUIRED BY WESTFIELD PUBLIC WORKS

DRAWING NOT TO SCALE

TYPE 2 CLEAN-OUT DETAIL

TOWN OF WESTFIELD, INDIANA
Renée Lynn Goff 10/9/06 DATE FIGURE S-15

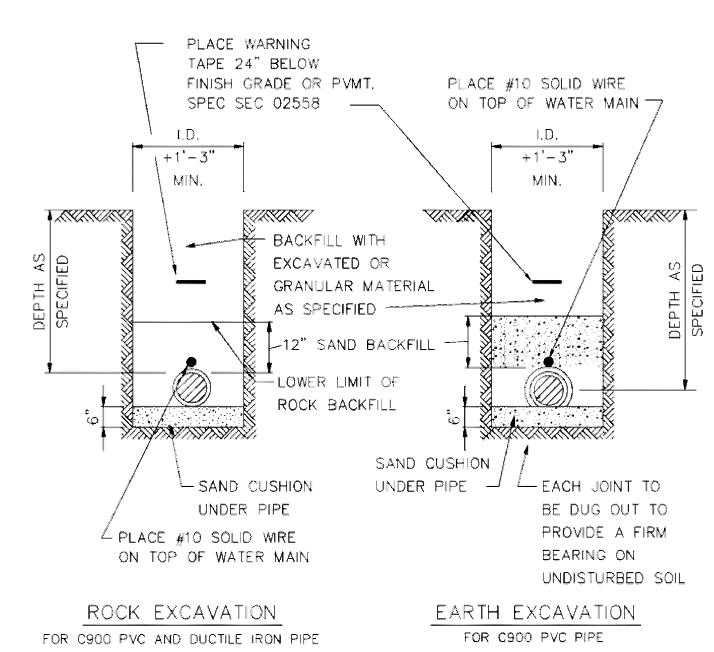

NOTE:
DUCTILE IRON PIPE OR HDPE (D11) PIPE DOES NOT REQUIRE SPECIAL BACKFILL UNLESS DIRECTED ON THE PLANS OR REQUIRED BY THE DIRECTOR OR THIER DESIGNEE.

WATER MAIN INSTALLATION DETAIL

TOWN OF WESTFIELD, INDIANA
Renée Lynn Goff 10/9/06 DATE FIGURE W-1

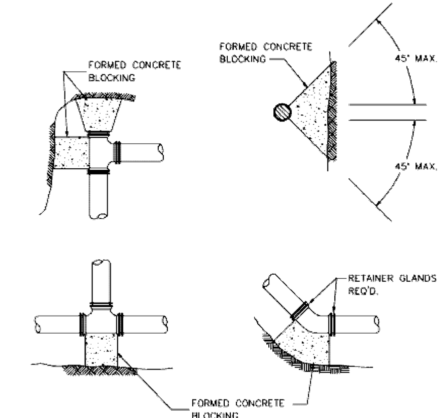

SIZE	TEE & PLUG	90° BEND	45° BEND	22-1/2° BEND	11-1/4° BEND
4"	2.0	2.5	1.5	1.0	1.0
6"	4.0	5.5	3.0	1.5	1.0
8"	6.5	9.0	5.0	2.5	1.5
10"	10.0	14.0	7.5	4.0	2.0
12"	14.0	20.0	11.0	5.5	3.0
14"	19.0	27.0	14.5	7.5	4.0
16"	25.0	35.0	19.0	10.0	5.0
18"	31.5	44.5	24.0	12.5	6.5
20"	40.0	54.0	31.0	16.5	7.5
24"	55.5	78.5	42.5	22.0	11.0
30"	86.5	122.0	66.0	34.0	17.0
36"	124.0	175.5	95.0	48.5	24.5
42"	168.0	237.5	128.5	65.5	33.0
48"	212.0	366.0	160.0	85.0	42.0

(AREA IN SQ. FT. REQUIRED FOR CONCRETE THRUST BLOCKING)

NOTE:
THE THRUST BLOCK AREAS ARE BASED ON A SOIL BEARING LOAD OF 2,000 LB./SQ. FT.
GREASE OR PLACE A LAYER OF VISQUEEN ON ALL WATER MAIN SURFACES PRIOR TO PLACEMENT OF CONCRETE

THRUST BLOCK DETAIL

TOWN OF WESTFIELD, INDIANA
Renée Lynn Goff 10/9/06 DATE FIGURE W-2

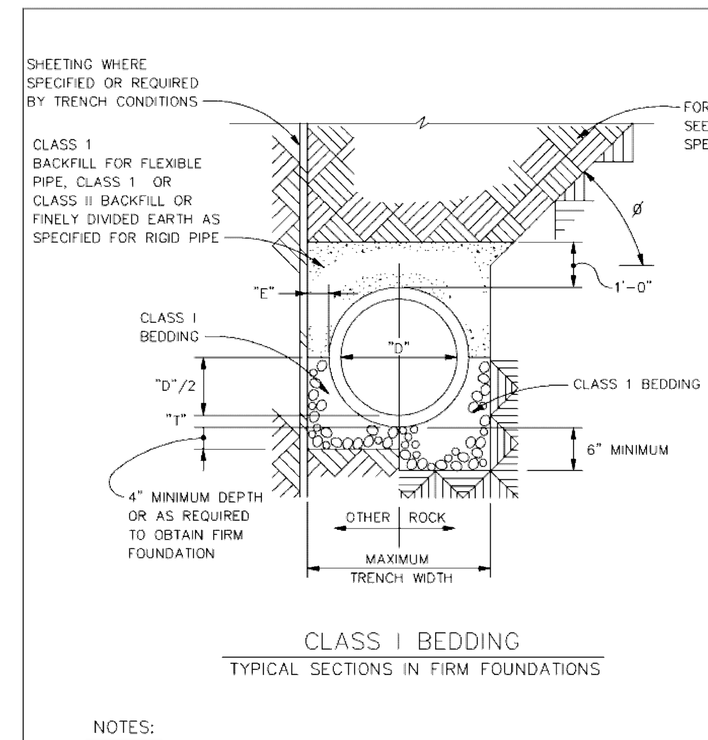

NOTES:
1. SLOPE ANGLE, **° ,SHALL BE LESS THAN THE FRICTION ANGLE OF THE EXCAVATED MATERIAL.
2. "D"= NOMINAL PIPE SIZE.
3. "T"= PIPE WALL THICKNESS.

PVC BEDDING DETAIL

TOWN OF WESTFIELD, INDIANA
Renée Lynn Goff 10/9/06 DATE FIGURE W-14

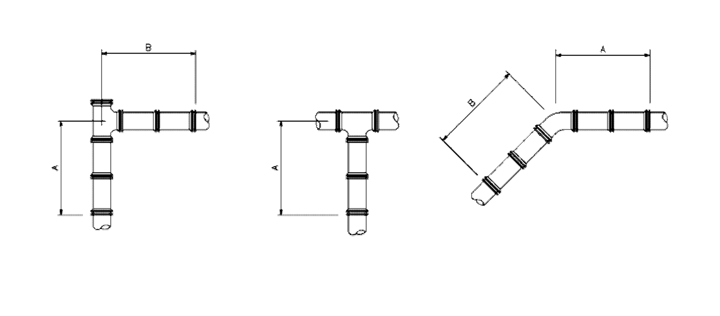

NOTE:
THE LENGTHS OF PIPE WITH RESTRAINED JOINTS ARE BASED ON A COMPACTED SILTY SOIL SURROUNDING THE PIPE

	A		B		
SIZE	TEE & PLUG	90° BEND	45° BEND	22-1/2° BEND	11-1/4° BEND
6"	12'-0"	17'-0"	10'-0"	6'-0"	3'-0"
8"	16'-0"	22'-0"	13'-0"	8'-0"	4'-0"
10"	19'-0"	27'-0"	16'-0"	9'-0"	5'-0"
12"	23'-0"	32'-0"	19'-0"	11'-0"	6'-0"
14"	26'-0"	36'-0"	21'-0"	12'-0"	7'-0"
16"	29'-0"	41'-0"	24'-0"	14'-0"	8'-0"
18"	32'-0"	45'-0"	26'-0"	15'-0"	8'-0"
20"	35'-0"	50'-0"	29'-0"	16'-0"	9'-0"
24"	41'-0"	58'-0"	34'-0"	19'-0"	10'-0"
30"	50'-0"	70'-0"	40'-0"	22'-0"	12'-0"
36"	58'-0"	82'-0"	46'-0"	26'-0"	14'-0"
42"	66'-0"	93'-0"	52'-0"	29'-0"	15'-0"

(LENGTH IN FEET REQUIRED FOR RESTRAINING JOINTS)

RESTRAINED JOINT DETAILS

TOWN OF WESTFIELD, INDIANA
Renée Lynn Goff 10/9/06 DATE FIGURE W-3

Know what's below. Call before you dig.
Within Indiana Call
811 or 800-382-5544
24 Hours a Day, 7 Days a Week.
PER INDIANA STATE LAW IC 8-1-26. IT IS AGAINST THE LAW TO EXCAVATE WITHOUT NOTIFYING THE UNDERGROUND LOCATION SERVICE TWO (2) WORKING DAYS BEFORE COMMENCING WORK.

10505 N. College Avenue
Indianapolis, Indiana 46280
weihe.net
317 | 846 - 6611
800 | 452 - 6408
317 | 843 - 0546 fax
ALLAN H. WEIHE, P.E., L.S. - FOUNDER
WEIHE ENGINEERS
Land Surveying | Civil Engineering
Landscape Architecture

PROJECT NO.: W12.0262
DWG NAME: 120262-C201 det.dwg
DESIGNED BY: EAC/MG
DRAWN BY: EAC/MG
CHECKED BY: JKS
DATE: 06.29.2012

DATE	BY	REVISIONS AND ISSUES
07/26/12	EAC/MG	50% CD SET
8/23/12	EAC	REVISIONS PER WESTFIELD REVIEW

APPROVAL PENDING NOT FOR CONSTRUCTION
JAMES K. SHINNEMAN P.E. 10200392

PREPARED FOR:
EPIPHANY EVANGELICAL LUTHERAN CHURCH PHASE ONE
156TH AND DITCH ROAD, WESTFIELD IN
UTILITY PLAN DETAILS
Part of the SE Corner of SW/1/4 of Section 10, Township 18 North, Range 3 East, Washington Township, Hamilton County, Indiana

SHEET NO. C205
PROJECT NO. W12.0262

LOCATION: H:\2012\w120262\Engineering\design\conset\120262-C201 det.dwg
LAYOUT: C205 - UTILITY DETAILS
DATE/TIME: August 24, 2012 - 12:10pm
PLOTTED BY: cartere

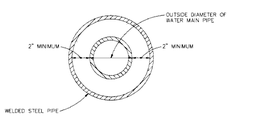

DIAMETER OF CASING	WALL THICKNESS (INCHES) UNDER HIGHWAY	UNDER RAILROAD
UNDER 14"	0.250	0.188
14"	0.250	0.219
16"	0.250	0.219
18"	0.250	0.250
20"	0.375	0.281
22"	0.375	0.312
24"	0.375	0.344
26"	0.375	0.375
28"	0.500	0.406
30"	0.500	0.406
32"	0.500	0.438
34"	0.500	0.469
36"	0.500	0.469
38"	0.500	0.500
40"	0.500	0.500
42"	0.500	0.500

STEEL CASING DETAIL

TOWN OF WESTFIELD, INDIANA

Westfield PUBLIC WORKS Department

STATE OF INDIANA PAUL LYNN SCOTT III No. 10420860 EXPIRES 12/31/12 REGISTERED PROFESSIONAL ENGINEER

Paul Lynn Scott III 10/9/06 DATE

FIGURE W-4

OPTIONS : ☐ DH152 (HARD WIRED LEVEL CONTROLS)
☐ DR152 (WIRELESS LEVEL CONTROLS)

FIELD JOINT REQUIRED FOR MODELS: DH152-129 / DR152-129 DH152-160 / DR152-160

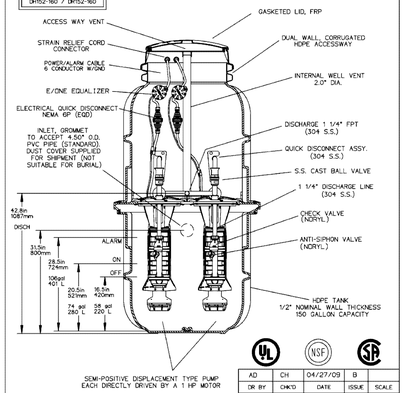

CONCRETE BALLAST MAY BE REQUIRED SEE INSTALLATION INSTRUCTIONS FOR DETAILS

AD	CH	04/27/09	B	
DR BY	CHK'D	DATE	ISSUE	SCALE

e/one SEWER SYSTEMS

MODEL DH152 / DR152 DETAIL SHEET

NA0052P02

OPTIONS : ☐ DH152 -129 (HARD WIRED LEVEL CONTROLS)
☐ DR152 -129 (WIRELESS LEVEL CONTROLS)

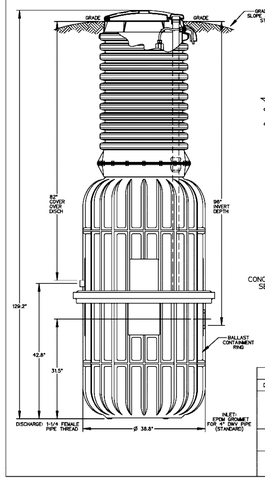

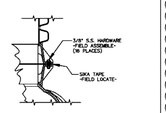

DETAIL, FIELD JOINT

SEE INSTALLATION INSTRUCTIONS FOR FURTHER DETAILS

CONCRETE BALLAST MAY BE REQUIRED SEE INSTALLATION INSTRUCTIONS FOR DETAILS

AD	CAH	7/13/07	A	1/16
DR BY	CHK'D	DATE	ISSUE	SCALE

e/one SEWER SYSTEMS

MODEL DH152-129 / DR152-129

NA0052P05

STANDARD NOTE:

1. System shall be designed for the following capacities:
Peak Treatment Flow: 3.2 cfs [90 L/s]
Sediment Storage: 32 ft³ [0.9 m³]
Oil/Debris Storage: 190 gal. [719 L]

*** Please see accompanied Aqua-Swirl specification notes.**
*** See Site Plan for actual system orientation.**
****Orientation may vary from 90°, 180°, or custom angles to meet site conditions.**

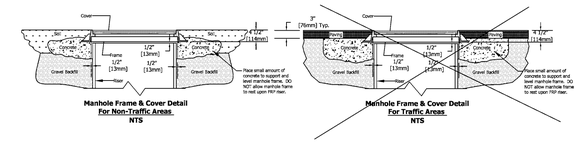

Manhole Frame & Cover Detail For Non-Traffic Areas NTS

Manhole Frame & Cover Detail For Traffic Areas NTS

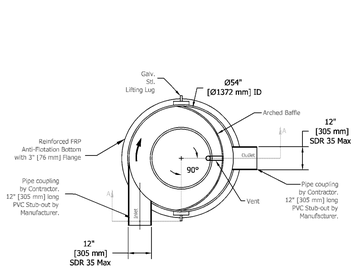

Plan View

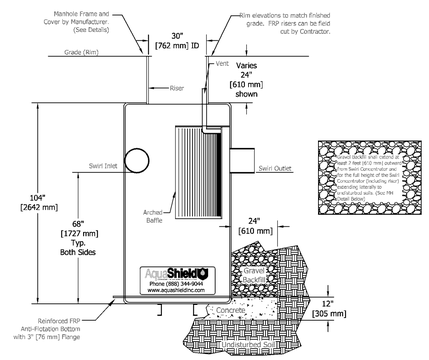

Section A-A

This is a Sample Detail, Please contact AquaShield, Inc. for more Information

AquaShield™ INNOVATIVE INDUSTRIAL SOLUTIONS, INC.
2705 Kanasita Drive, Chattanooga, TN 37343
Phone (888) 344-9044 Fax (423) 826-2112
www.aquashieldinc.com

Document:	AS-4 STD
Drawn By:	BLR
Scale:	1:30
Date:	05/08/06

U.S. Patent No. 6524473 and other Patent Pending

Aqua-Swirl Concentrator Model AS-4 Off-Line Standard Detail (FRP)

OFFICE OF THE HAMILTON COUNTY SURVEYOR

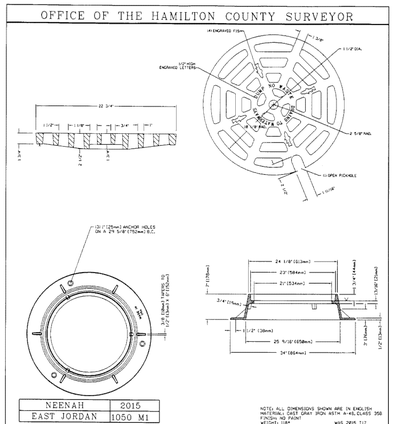

NEENAH	2015
EAST JORDAN	1050 M1

NOTE: ALL DIMENSIONS SHOWN ARE IN ENGLISH
MATERIAL: CAST GRAY IRON ASTM A-48, CLASS 35B
FINISH: NO PAINT
WEIGHT: 138#

* Or approved by Hamilton County Surveyor's Office

(DRAWING NOT TO SCALE)

HAMILTON COUNTY SURVEYOR'S OFFICE

MANHOLE SLOTTED GRATE AND FRAME CASTING — REVISED 9/25/2006

APPROVED: KENTON C. WARD, HAMILTON COUNTY SURVEYOR — DATE 25 Sep 06

STANDARD PLAN CT-2

OFFICE OF THE HAMILTON COUNTY SURVEYOR

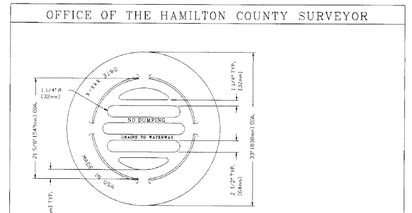

NEENAH	4342
EAST JORDAN	6489N

NOTE: ALL DIMENSIONS SHOWN ARE IN ENGLISH
FREE OPEN AREA: 278 SQUARE INCHES
MATERIAL: CAST GRAY IRON ASTM A-48, CLASS 35B
FINISH: NO PAINT
WEIGHT: 202#

* Or approved by Hamilton County Surveyor's Office

(DRAWING NOT TO SCALE)

HAMILTON COUNTY SURVEYOR'S OFFICE

BEEHIVE INLET CASTING — REVISED 11/16/2004

APPROVED: KENTON C. WARD, HAMILTON COUNTY SURVEYOR — DATE APR 05 07

STANDARD PLAN CT-10

OFFICE OF THE HAMILTON COUNTY SURVEYOR

STANDARD MANHOLE FOR PIPE SIZES 24" THRU 66"

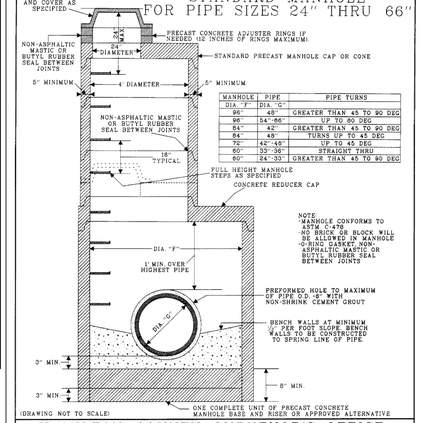

MANHOLE DIA. "F"	PIPE DIA. "G"	PIPE TURNS
96"	48"	GREATER THAN 45 TO 90 DEG
96"	54"-66"	UP TO 90 DEG
84"	42"	GREATER THAN 45 TO 90 DEG
84"	48"	TURNS UP TO 45 DEG
72"	42"-48"	UP TO 45 DEG
60"	33"-36"	STRAIGHT THRU
60"	24"-33"	GREATER THAN 45 TO 90 DEG

NOTE:
-MANHOLE CONFORMS TO ASTM C-478.
-NO BRICK OR BLOCK WILL BE ALLOWED IN MANHOLE
-O-RING GASKET, NON-ASPHALTIC MASTIC OR BUTYL RUBBER SEAL BETWEEN JOINTS

(DRAWING NOT TO SCALE)

HAMILTON COUNTY SURVEYOR'S OFFICE

REVISED 1 FEB 2002

APPROVED: KENTON C. WARD, HAMILTON COUNTY SURVEYOR — DATE 2/1/02

STANDARD PLAN D-21

OFFICE OF THE HAMILTON COUNTY SURVEYOR

PIPE SIZE (INCHES)	STRUCTURES LESS THAN 48" FROM T/C TO INVERT (INCHES)	MAXIMUM NUMBER OF SIDES[3] OF THE BOX WITH PIPES	MINIMUM ANGLE BETWEEN PIPE[4] (NUMBER OF PIPES - ANGLE IN DEGREES)	STRUCTURES GREATER THAN 48" FROM T/C TO INVERT	CURB CASTING PER DETAIL CT-7 OR CT-8
12 TO 15	24 X 24 BOX	3	2 - 135 3 - 90	MANHOLE DETAIL D-20 OR NOTE 2	YES
15 TO 18	30 X 30 BOX	3	2 - 135 3 - 90	MANHOLE DETAIL D-20 OR NOTE 2	YES WITH BOX/MH LID
18 TO 24	24 X 36[1] OR 36 X 36 BOX	3	2 - 135 3 - 90	MANHOLE DETAIL D-20 OR NOTE 2	YES WITH BOX/MH LID
24 TO 66	NOT APPLICABLE	NOT APPLICABLE	NOT APPLICABLE	MANHOLE DETAIL D-21 OR NOTE 2	YES WITH BOX/MH LID
66 TO 144	NOT APPLICABLE	NOT APPLICABLE	NOT APPLICABLE	MANHOLE DETAIL D-22 OR NOTE 2	YES WITH BOX/MH LID

NOTES

1 - UP TO 15" PIPE CAN BE INSTALLED IN 24" SIDE. ALL OTHER PIPES SHALL BE INSTALLED IN LONG SIDE OF BOX.

2 - A BOX WITH STEPS WITH WRITTEN SPECIAL DESIGN APPROVAL FROM HCSO.

3 - A PIPE INSTALLED IN THE CORNER OF A BOX COUNTS AS USING 2 SIDES OF THE BOX.

4 - STRUCTURES SHALL BE DESIGNED FOR MAXIMUM FLOW THROUGH STRUCTURE.

SPECIAL NOTE: ALL STRUCTURES REQUIRE 0.1' OF DROP ACROSS THE STRUCTURE (LOWEST INLET INVERT TO OUTLET INVERT).

SPECIAL NOTE: ALL MANHOLES SHALL HAVE STEPS TO WITHIN A MAXIMUM OF 1 FOOT FROM BOTTOM OF STRUCTURE. INSPECTOR MAY REQUIRE STEPS TO BE INSTALLED OR MOVED AFTER STRUCTURE IS SET, TO IMPROVE ACCESS.

SPECIAL NOTE: IF CURB INLET STRUCTURE IS TO HAVE 2 FOOT SUMP, THEN THE STRUCTURE SHALL BE A MINIMUM OF A 48" MANHOLE OR A 3 FOOT BY 4 FOOT BOX.

SPECIAL NOTE: DOUBLE INLET BOX STRUCTURES SHALL PROVIDE SUPPORT FOR ALL 4 SIDES OF THE CASTING.

SPECIAL NOTE: ALL CASTINGS SHALL BE PER THE APPROVED CASTING DETAILS OR BY SPECIAL WRITTEN APPROVAL FROM HCSO.

SPECIAL NOTE: NO "DOGHOUSE" STRUCTURES ARE ALLOWED.

HAMILTON COUNTY SURVEYOR'S OFFICE

STORM STRUCTURE SIZING TABLE — REVISED 18 DEC 2006

APPROVED: KENTON C. WARD, HAMILTON COUNTY SURVEYOR — DATE 8-14-2007

STANDARD PLAN D-18

OFFICE OF THE HAMILTON COUNTY SURVEYOR

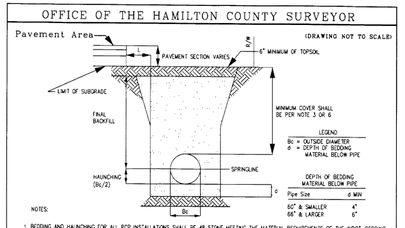

NOTES:

1. BEDDING AND HAUNCHING FOR ALL RCP INSTALLATIONS SHALL BE #8 STONE MEETING THE MATERIAL REQUIREMENTS OF THE INDOT. BEDDING SHALL BE PLACED IN THE TRENCH BOTTOM SUCH THAT AFTER THE PIPE IS INSTALLED TO GRADE AND LINE, THERE REMAINS A 4" MINIMUM DEPTH OF MATERIAL BELOW THE PIPE BARREL AND A MINIMUM OF 3" BELOW THE BELL. FOR PIPE SIZES 66" AND LARGER, THE MINIMUM DEPTH OF MATERIAL BELOW THE PIPE BARREL SHALL BE 6". BEDDING SHALL BE PLACED TO BE UNIFORM AS POSSIBLE, BUT SHALL BE LOOSELY PLACED UNCOMPACTED MATERIAL UNDER THE MIDDLE THIRD OF THE PIPE PRIOR TO PLACEMENT OF THE PIPE. IF THE UNDERLYING SOILS OF THE TRENCH BOTTOM ARE SOFT OR YIELDING, THE SOIL SHALL BE UNDERCUT TO SUCH A DEPTH THAT WHEN REPAIRED WITH #2 STONE IT WILL PRODUCE A UNIFORM AND STABLE FOUNDATION ALONG THE ENTIRE LENGTH OF THE PIPE. HAUNCHING AND INITIAL BACKFILL SHALL BE COMPACTED IN 8" MAXIMUM LIFTS TO NOT LESS THAN 90% STANDARD PROCTOR DENSITY FOR THE ENTIRE DEPTH OF THE MATERIAL PLACED. THE BACKFILL SHALL BE BROUGHT UP EVENLY ON BOTH SIDES OF THE PIPE FOR THE FULL LENGTH OF THE PIPE. HAUNCHING SHALL EXTEND TO THE SPRINGLINE OF THE PIPE. MINIMUM TRENCH WIDTH SHALL BE THE OUTSIDE DIAMETER OF THE PIPE PLUS 18".

2. FINAL BACKFILL FOR ALL RCP INSTALLATIONS WHERE "L" IS 5' OR LESS SHALL BE B-BORROW FOR STRUCTURE BACKFILL MEETING THE MATERIAL REQUIREMENTS OF THE INDOT AND SHALL BE COMPACTED IN 8" MAXIMUM LIFTS TO NOT LESS THAN 90% STANDARD PROCTOR DENSITY FOR THE ENTIRE DEPTH OF THE MATERIAL PLACED. THE BACKFILL FOR THE TOP 6" OF THE EXCAVATION BELOW THE START OF THE AGGREGATE SUBBASE OF THE PAVEMENT SHALL BE #53 STONE MEETING THE MATERIAL REQUIREMENT OF THE INDOT AND SHALL BE COMPACTED TO NOT LESS THAN 90% STANDARD PROCTOR DENSITY. FINAL BACKFILL FOR ALL RCP INSTALLATIONS WHERE "L" IS GREATER THAN 5' SHALL BE CLEAN FILL MATERIAL FREE OF ROCKS LARGER THAN 6" IN DIAMETER, FROZEN LUMPS OF SOIL, WOOD, OR OTHER EXTRANEOUS MATERIAL. COMPACTED IN 12" MAXIMUM LIFTS TO NOT LESS THAT 90% STANDARD PROCTOR DENSITY FOR THE ENTIRE DEPTH OF THE EXCAVATION. THE FINAL 6 INCHES OF THE EXCAVATION SHALL CONSIST OF TOPSOIL.

3. THE MINIMUM COVER FROM THE TOP OF THE INSTALLED PAVEMENT TO THE TOP OF THE INSTALLED PIPE SHALL BE THE PAVEMENT SECTION THICKNESS (ALL BITUMINOUS AND AGGREGATE MATERIAL ABOVE THE SUBGRADE) PLUS 1'-2', BUT UNDER NO CIRCUMSTANCES SHALL THE COVER ALONG ANY PART OF THE PIPE FROM THE FINAL PAVEMENT ELEVATION TO THE TOP OF THE PIPE BE LESS THAT 2.5 FEET.

4. IF EXISTING SUBGRADE HAS BEEN LIME STABILIZED, BACKFILL WITH B-BORROW UP TO BOTTOM OF UNTREATED EXISTING SUBGRADE AND FILL TO TOP OF TREATED SUBGRADE WITH LIME STABILIZED SOIL.

5. THESE STANDARDS SHALL APPLY FOR ALL REGULATED DRAIN STORM SEWERS UNLESS THE ENTITY HAVING CONTROL OVER THE RIGHT OF WAY HAS A MORE STRINGENT STANDARD, IN WHICH CASE THE HIGHER STANDARD SHALL APPLY.

6. THE MINIMUM COVER FROM THE FINAL GRADE TO THE TOP OF THE PIPE SHALL BE NOT LESS THAN 2 FEET OUTSIDE OF PAVEMENT AREAS.

HAMILTON COUNTY SURVEYOR'S OFFICE

RCP Bedding and Backfill Standard — REVISED 18 DEC 2006

APPROVED: KENTON C. WARD, HAMILTON COUNTY SURVEYOR — DATE 8-14-2007

STANDARD PLAN D-23

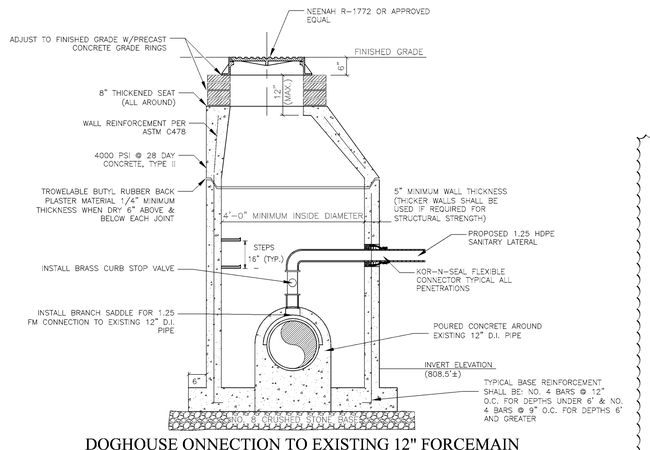

DOGHOUSE ONNECTION TO EXISTING 12" FORCEMAIN

(NO SCALE)

10505 N. College Avenue
Indianapolis, Indiana 46280
weihe.net

317 | 846 - 6611
800 | 452 - 6408
317 | 843 - 0546 *fax*

ALLAN H. WEIHE, P.E., L.S. - FOUNDER

WEIHE ENGINEERS

Land Surveying | Civil Engineering
Landscape Architecture

DATE	BY	REVISIONS
09/07/12	DAC	REVISIONS PER WESTFIELD REVIEW
8/23/12	DAC	

PROJECT NO.: W12.0262
DWG. NAME: 120262-C201 det.dwg
DESIGNED BY: EAC/MG
DRAWN BY: EAC/MG
CHECKED BY: JKS
DATE: 09/28/2012

REVISIONS AND ISSUES
△1 REVISIONS PER WESTFIELD REVIEW

JAMES K. SHINNEMAN REGISTERED PROFESSIONAL ENGINEER 10200392 STATE OF INDIANA — NOT VALID UNLESS PRINTED

JAMES K. SHINNEMAN P.E. 10200392

PREPARED FOR:
EPIPHANY EVANGELICAL LUTHERAN CHURCH PHASE ONE
156TH AND DITCH ROAD, WESTFIELD IN

UTILITY PLAN DETAILS

Part of the SE Corner of SW1/4 of Section 10, Township 18 North, Range 3 East, Washington Township, Hamilton County, Indiana

SHEET NO.
C205A

PROJECT NO.
W12.0262

811 Know what's below. Call before you dig.
Within Indiana Call 811 or 800-382-5544
24 Hours a Day, 7 Days a Week.
PER INDIANA STATE LAW IC 8-1-26, IT IS AGAINST THE LAW TO EXCAVATE WITHOUT NOTIFYING THE UNDERGROUND LOCATION SERVICE TWO (2) WORKING DAYS BEFORE COMMENCING WORK.

LOCATION: H:\2012\W12\0262\Engineering\design\cones\120262-C201 det.dwg
LAYOUT: C205A - UTILITY PLAN DETAILS
DATE/TIME: August 24, 2012 - 12:10pm
PLOTTED BY: cadtech

WESTFIELD STANDARDS – 2006
SECTION 02660 – WATER MAINS
PART 1 – GENERAL

1.1 DESCRIPTION
A. Scope: Furnish and install pipe, fittings, valves, hydrants and appurtenances necessary to complete work shown or specified.
B. Codes, specifications and standards referred to by title or number in this specification shall be adhered to, and latest revisions shall apply in all cases.
C. Definitions
1. Abbreviations
ANSI – American National Standards Institute.
ASTM – American Society for Testing & Materials.
AWWA – American Water Works Association.
2. All pipe, fitting and valve sizes and references to pipe diameter on the drawings or in the specifications are intended to be nominal size or diameter and shall be interpreted as such.

1.2 QUALITY ASSURANCE
A. Mark pipe, fittings, valves and hydrants according to the applicable specification or standard. Each length of pipe shall bear the name or trademark of the manufacturer, the location of the plant, and the date of manufacture. Each length shall likewise be marked to designate the class or strength of the pipe. The marking shall be made on the exterior or interior of the pipe barrel near the bell or groove end and shall be plainly visible. Pipe shall have permanently extruded stripes on three (3) or four (4) sides according to the following schedule: Water Main: Blue Stripes
B. The Contractor shall test and disinfect water mains constructed under this Contract, as specified in this Section.
C. The Town shall collect samples of water from water mains constructed after the piping has been disinfected. The Town will submit the samples to the applicable regulatory agency for bacteriological analysis. Collection and submittal of these samples shall meet the requirements of
the applicable regulatory agency. If samples do not pass the requirements of the bacteriological analysis, the water main will be disinfected and sampled again. This procedure will be followed until the samples pass the analysis.
D. A performance test may be required by the Public Works Director, at any time, for each crew installing water mains. The Contractor shall perform these tests at no additional cost to the Owner. When required by the Public Works Director, the Contractor shall test a given section of water main installed by a given crew. The section shall be a continuous section of water main which can be isolated by valves shown on the drawings. The Contractor shall not install water mains in other sections until the first section has been successfully tested.
PART 2 – PRODUCTS
2.1 GENERAL
All pipe, fittings, valves, hydrants and appurtenances shall be as shown on the drawings or as required by the manufacturer's and ANSI/AWWA specifications. All pipe, fittings, valves, hydrants and appurtenances shall be new and unused.
2.2 BURIED WATER MAIN PIPE AND FITTINGS
A. Ductile Iron Water Mains (3" and Larger)
1. Pipe
a. Ductile iron pipe shall meet the requirements of ANSI/AWWA C151/A21.51-91. Design and manufacture pipe for the pressure class listed plus 100 psi surge pressure. Additionally, a safety factor of 2.0 and a depth of cover, indicated on the drawings or as required by the manufacturer's and ANSI/AWWA specifications, shall be included. Minimum thickness class shall be as follows:

Size Range	Pressure Class
4" – 12"	350
14" – 20"	250

b. Pipe joints shall be push-on type. Joints shall meet the requirements of ANSI/AWWA C111/A21.11. Restrained joints shall be Lok-Ring, Lok-Fast, Lok-Tyte, or equal,

2. Fittings
Fittings shall be ductile iron. Fittings for standard size pipe shall meet the requirements of ANSI/AWWA C110/A21.10-93. Compact or short body fittings 3 inches through 16 inches shall meet the requirements of ANSI/AWWA C153/A21.53-94. Design and manufacture fittings for a pressure rating of at least 150 psi.
Fitting joints shall be mechanical joints or restrained push-on joints. Joints shall meet the requirements of ANSI/AWWA C111/A21.11. Thrust block all mechanical joints as indicated on the drawings or as required by the manufacturer's and ANSI/AWWA specifications. Pipe connecting to restrained joint fittings shall be restrained as indicated on the drawings or as required by the manufacturer's and ANSI/AWWA specifications.

3. Adapters
Adapters from ductile iron water mains to flange joint valves or fittings shall be ductile iron. Adapters shall meet the requirements of ANSI/AWWA C110/A21.10-93. Design and manufacture adapters for a pressure class rating of 150 psi.
Adapter ends connecting to ductile iron water mains shall be one of the following: plain end, push-on joint, mechanical joint or restrained push-on joint. Adapters with plain ends, push-on joints or mechanical joints may be used where restrained joints are not required. Adapters shall have restrained push-on joints where restrained joint piping is required, as indicated on the drawings. Mechanical joints and restrained push-on joints shall meet the requirements of ANSI/AWWA C111/A21.11. Restrained joints shall be Lok-Ring, Lok-Fast, Lok-Tyte or as approved by the Public Works Director.
Adapter ends connecting to flange joint valves or fittings shall have joints complying with the specifications for the applicable valves or fittings.

4. Line the inside surfaces of all pipe, fittings and adapters with single layer cement mortar lining. Cement mortar lining and seal coating shall meet the requirements of ANSI/AWWA C104/A21.4
95. Coat the outside surfaces of all pipe, fittings and adapters with a bituminous coating, complying with ANSI/AWWA C151.

5. Gaskets for mechanical joints and push-on joints shall meet the requirements of ANSI/AWWA C111/A21.11.

6. Nuts and Bolts
Nuts and bolts for mechanical joints shall be high strength, heat treated, alloy steel. Nuts shall be hexagon nuts, bolts shall be tee head bolts. Nuts and bolts shall meet the requirements of ANSI/AWWA C111/A21.11.
Nuts and bolts for restrained push-on joints shall meet the requirements of the joint manufacturer.

7. Polyethylene encasement for ductile iron water mains shall be installed and shall meet the requirements of ANSI/AWWA C105/A21.5. Installation of the polyethylene encasement shall be omitted if written approval is made by the ductile iron pipe manufacturer and/or the Public Works Director. Contractor/Developer shall be required to provide soils testing results for corrosivity at no additional charge to the Town if omission of the polyethylene encasement is proposed.

B. Polyvinyl Chloride Water Mains (3" to 8")
1. Pipe
A. Polyvinyl chloride pipe shall meet the requirements of ANSI/AWWA C900, Class 150/DR18. Design and manufacture pipe for a working pressure of 150 psi plus 100 psi surge pressure. Additionally, a safety factor of 2.0 and a depth of cover, indicated on the drawings or as required by the manufacturer's and ANSI/AWWA specifications, shall be included.
B. Polyvinyl chloride pipe shall have ductile-iron-pipeequivalent outside diameter.
C. Pipe joints shall be push-on type and meet the requirements of ANSI/AWWA C900. Do not use solvent-cement joints.

2. Fittings
A. Fittings shall be ductile iron and meet the requirements of ANSI/AWWA C110/A21.10. Design and manufacture fittings for a pressure rating of 150 psi.
B. Line the inside surfaces of fittings with cement mortar lining and bituminous seal coating shall meet the requirements of ANSI/AWWA C104/A21.4. Coat outside surfaces of fittings with bituminous coating. Outside coating shall meet the requirements of ANSI/AWWA C110/A21.10.
C. Fitting joints shall be mechanical joints. Mechanical joints shall meet the requirements of ANSI/AWWA C111/A21.11.
D. Mark each fitting. Marking shall meet the requirements of ANSI/AWWA C110/A21.10.

3. Adapters
A. Adapters from polyvinyl chloride water mains to victaulic, flange joint valves or fittings shall be ductile iron. Adapters shall meet the requirements of ANSI/AWWA C110/A21.10. Design and manufacture adapters for a pressure rating of 150 psi.
B. Line the inside surfaces of adapters with a single cement mortar lining. Cement mortar lining and seal coating shall meet the requirements of ANSI/AWWA C104/A21.4. Coat outside surfaces of adapters with bituminous coating, complying with ANSI/AWWA C110/A21.10.
C. Adapter ends connecting to polyvinyl chloride water mains shall have plain ends or mechanical joints. Mechanical joints shall meet the requirements of ANSI/AWWA C111/A21.11.
D. Adapter ends connecting to victaulic, flange joint valves or fittings shall have joints complying with the specifications for the applicable valves or fittings.

4. Gaskets
A. Gaskets for polyvinyl chloride push-on joints shall meet the requirements of ANSI/AWWA C900.
B. Gaskets for mechanical joints shall meet the requirements of ANSI/AWWA C111/A21.11 and ASTM F477.

5. Nuts and bolts for mechanical joints shall be high strength, heat treated, alloy steel. Nuts shall be hexagon nuts, and bolts shall be tee head bolts. Nuts and bolts shall meet the requirements of ANSI/AWWA C111/A21.11.

C. High-density polyethylene (HDPE) for Water Mains (3" or larger)
1. Pipes: Polyethylene piping and fittings shall be made of a high density polyethylene pipe compound with extra high molecular weight that meets the requirements for Type III, Grade P345 Polyethylene Material as defined in ASTM D-1248 (PE 3408). The minimum pressure class/SDR rating acceptable shall be Class 160/SDR 11. The pipe shall be DIPS and shall have an interior diameter no less than the piping that it is connected to.

2. Joints: Joints shall be of a heat fusion joining system. Pipe and fittings shall be thermal butt fusion, saddle fusion, or socket fusion in accordance with manufacturer recommended procedures and ASTM D-2161. At the point of fusion, the outside diameter and minimum wall thickness of the fitting shall match the outside diameter and minimum wall thickness specifications of ASTM D-1248 for the same size pipe.
Joining of the pipes and fittings shall be performed in accordance with ASTM D-2774. Depending upon the installation requirements and site location, joining shall be performed within or outside the excavation. Joints of the pipe sections shall be smooth on the inside and internal projection beads shall not be greater than 3/16 inch.
The tensile strength at yield of the butt-fusion joints shall not be less than the pipe. A specimen of the pipe cut across the butt-fusion joints shall be tested in accordance with ASTM D-638
The manufacturer shall provide fusion training. The contractor and the onsite joint inspector shall be trained by the manufacturer or manufacturer's authorized representative.
The fusion equipment and operator shall be required to demonstrate successful field experience. Regarding fusion over 36" capability, the fusion unit shall be field tested for a period of five years and the fusion operator shall have pipe size experience of the same size pipe on this project for five years or longer.

3. Fittings: All fitting shall be provided as indicated on the plans. HDPE Fittings shall be of the same material and class as the pipe and shall be manufactured by the manufacturer of the pipe. HDPE Elbows, tees, and wyes shall be manufactured by mitered fabrication. The manufacturer shall have a written specification for all standard mitered fittings, which establishes Quality Control criteria and tolerances. The manufacturer may be required to demonstrate its ability to produce product required by this specification. Mechanical joint anchor fittings (MJ Adapter or Harvey Adapter) shall be used to transition from ductile iron to HDPE and from HDPE to PVC. The fitting shall be stronger than the pipe in that when it is subjected to tensile stress the pipe will pull apart before the fitting will pull out and the pipe will blow before the fitting will rupture under pressure.
All pressure rated fittings shall be rated according to the manufacturer's written specifications, and clearly labeled on the fittings as such.
2.3 PIPE AND FITTINGS SMALLER THAN 3-INCH
A. Pipe shall be Type K drawn copper and shall meet the requirements of ASTM B88. Cooper pipe must be used for all piping to the meter pit.
B. Fittings and couplings shall be cast bronze and shall meet the requirements of ASTM B16.18. Construct and manufacture fittings and couplings for a pressure rating of 150 psi.
C. Unions shall be bronze and shall meet the requirements of ASTM B16.18. Design and manufacture unions for a pressure rating of 150 psi.
D. Flanges for connection of screwed joint pipe to flange joint valves or fittings shall be 125-16 cast iron, screwed companion flanges, complying with both ASTM A126 and ANSI B16.1.
E. Tape for screwed joints shall be teflon.
F. Gaskets for flange joints shall be 1/16-inch thick, full face and conform to ANSI/AWWA C111/A21.11. Gaskets shall be rubber or as approved by the Public Works Director.
G. Bolts for flange joints shall be steel, heavy hexagon head machine bolts. Nuts shall be steel, semi-finished, heavy hexagon nuts. Nuts and bolts shall meet the requirements of ASTM A307 for Grade B and be zinc-coated alloy steel.

2.4 VALVES
A. Butterfly Valves
1. Butterfly valves and operators shall meet the requirements of AWWA Standard C504. Valves and operators shall be Class 150B.
2. Buried butterfly valves shall have mechanical joints. Mechanical joints shall meet the requirements of AWWA C111. Butterfly valves installed above ground or in structures shall have flange joints as specified in AWWA Standard C504. Nuts, bolts, and gaskets for flange joints shall meet the requirements of ANSI/AWWA C110/A21.10. Nuts and bolts shall be cadmium plated. Gaskets shall be full face and shall be red rubber, or equal.
3. Each buried butterfly valve shall have a manual operator and a 2inch operating nut. Valve opening direction shall be consistent with operation of existing valves in the waterworks in which the valves are installed, unless otherwise directed by the Engineer.
4. Each butterfly valve installed above ground or in a structure shall have a manual operator and handwheel.

B. Gate Valves
1 Buried gate valves 4-inches and larger shall be full ductile iron body, epoxy fusion bonded inside and out, non-rising stem gate valves. Valves shall meet the requirements of ANSI/AWWA C500 or C509 and have mechanical joint ends. Mechanical joints and joint accessories shall comply with ANSI/AWWA C111/A21.11. Valve opening direction shall be consistent with operation of existing valves in the waterworks where the valves are installed, unless otherwise directed by the Public Works Director.
2 Three-inch buried gate valves shall be full ductile iron body, epoxy fusion bonded inside and out, non-rising stem gate valves. Valves shall meet the requirements of ANSI/AWWA C500 or C509; except, ends shall be screwed. Screwed ends shall conform to ANSI B16.3. Valve opening direction shall be consistent with operation of existing valves in the waterworks where the valves are installed, unless otherwise directed by the Public Works Director.
3 Gate valves 4-inches and larger installed above ground or in structures shall be full ductile iron body, epoxy fusion bonded inside and out, outside screw and yoke gate valves. Valves shall correspond to ANSI/AWWA C500 or C509. Outside screw and yoke gate valves shall have flange joint ends and malleable iron handwheels. Flange joints and accessories shall be as specified in ANSI/AWWA C110/A21.10. Nuts and bolts shall be zinc-coated alloy steel. Gaskets shall be full face and rubber, or as approved by the Public Works Director.
4 Gate valves smaller than 4-inch installed above ground or in structures shall be bronze, 125 lb. S.W.P. double disc, screwed-in bonnet, rising stem, inside screw gate valves with screwed ends and malleable iron handwheels. Valves shall meet the requirements of federal specifications WASTEWATER-V-54d for Class A, Type III Valves.

C. Buried valves 2-inch and smaller shall be curb stops. Curb stops shall meet the applicable requirements of ANSI/AWWA C800, ASTM B-62 for 85-5-5-5 composition bronze, and USAS B2.1. Curb stops shall be Mueller H-10283, Ford B11 Series, or as approved by the Public Works Director.

D. Tapping Valves
1 Tapping valves shall comply with both ANSI/AWWA C500 or C509 and have flange mechanical joint ends. Double disc gate valve gates, gate rings and body-seat rings shall be oversized to permit entry and exit of tapping machine cutters.
2 Valve end connecting to tapping sleeve shall have a flange for bolting to the sleeve. The flange shall have a tongue which fits a recess in the sleeve. Tongues shall meet the requirements of MSS SP-60. Resilient seated gate valves having a port diameter equal to or exceeding 1/4 inch over nominal diameter shall not require a tongue. Flange dimensions and drilling shall meet the requirements of ANSI B16.1. Nuts, bolts, and gaskets for flange joints shall meet the requirements of ANSI/AWWA C110/A21.10-93. Nuts and bolts shall be zinc-coated alloy steel, and gaskets shall be rubber, or as approved by the Public Works Director. Mechanical joints and accessories shall meet the requirements of ANSI/AWWA C111/A21.11. A full nominal diameter cutter shall be used for tapping. Tapping valves 14-inch and smaller shall be installed vertically. Tapping valves 16-inch and larger shall be installed horizontally and shall have bypass valves. Tapping valves installed horizontally shall have rollers and tracks. Valves 16-inch and larger shall have gear operators with enclosed gear cases suitable for buried service. Gear cases shall be extended type or totally enclosed type. Extended type gear cases shall have bolted side plates to cover stem and stuffing box.

E. Air and Vacuum Valves: Air and vacuum valves shall be as follows:

Size	Specification
½"	Apco No. 141WD, Val-Matic 100DWS, or equal
1"	Apco No. 142WD, Val-Matic 101DWS, or equal
2"	Apco No. 144WD, Val-Matic 102DWS, or equal
3"	Apco No. 146WD, Val-Matic 103DWS, or equal
4"	Apco No. 1604/152, Val-Matic 104DWS, or equal
6"	Apco No. 1606/153, Val-Matic 106DWS, or equal

2.5 VALVE BOXES
A. Valve boxes for butterfly valves and gate valves shall be cast iron. Valve boxes shall be two piece or three piece type. Each two piece box shall be complete with bottom section, top section and cover. Each three piece box shall be complete with base, center section, top section and cover. Valve boxes shall be extension type with slide or screw type adjustment.
Each base and bottom section shall be the proper size for the valve served. Each valve box assembly shall be the proper length for the valve served. The minimum thickness of metal shall be 3/16-inch. Cast the word "WATER" in each valve box cover.
2.6 FIRE HYDRANTS
A. Fire hydrants shall be dry-barrel, compression shutoff, traffic model and comply with AWWA C502. Main valve size shall be 5-1/4 inch. Inlets shall be 6-inch mechanical joint. Each hydrant shall have two 2-1/2-inch nozzles and one 5-inch Storz pumper nozzle. Nozzle threads and hydrant opening direction shall be consistent with existing fire hydrants in the waterworks in which the fire hydrants are installed, unless otherwise directed by the Public Works Director. Each hydrant shall be the proper length for the water main to which the hydrant is connected. Fire hydrant coating shall meet the requirements of AWWA C502. Fire hydrants shall be MAB Fire Protection Red (7068), within the Westfield Washington Fire Department jurisdiction or MAB Caution Yellow (7077), within the Noblesville Fire Department jurisdiction. Hydrants shall be Model No. A423, as manufactured by Mueller Company.
B. Fire Hydrant Placement – Fire Hydrants shall be placed no farther apart than 300 feet in all residential subdivisions, subdivision sections, and other residential areas in which dwelling density meets or exceeds three dwelling units per gross acre. Fire hydrants shall be placed no further apart than 300 feet in all Industrial, Business, and Commercial areas, and all Industrial, Business, and Commercial uses. Such requirement shall be in full force and effect unless explicitly exempted by the Chief of the local fire department. For residential uses with densities less than three dwelling units per gross acre, the requirements as established in Table No. III-B-A of the Uniform Fire Code shall apply. Where there is any ambiguity or dispute concerning the interpretation of this requirement, the decision of the Chief of the local fire department shall prevail subject to appeal.
2.7 SPRINKLER SYSTEMS
Multi-family developments, duplexes, and hotels/motels shall be required to have sprinkler systems installed in the attics of said structure as approved by the Chief of the local fire department. Such requirement shall be in full force and effect unless explicitly exempted by the Chief of the local fire department. Where there is any ambiguity or dispute concerning the interpretation of this requirement, the decision of the Chief of the local fire department shall prevail subject to approval.
2.8 TAPPING SLEEVES
A. Tapping sleeves shall be stainless steel split sleeves. Each sleeve shall have a branch connection with a flange end. The inside diameter of each branch shall be over-sized to permit entry and exit of tapping machine cutters. Each flange shall have a recess to center a tapping valve. Recesses shall meet the requirements of MSS SP-60. Flange dimensions and drilling shall meet the requirements of ANSI B16.1. The sleeve dimensions shall be such that the sleeves will not leak when installed on cast iron, ductile iron, or polyvinyl chloride pipe with outside diameters shown in ANSI/AWWA Standards.
B. Tapping sleeves for 4-inch through 16-inch pipe shall be mechanical joint type. Design and manufacture tapping sleeves for a working pressure of 200 psi.
C. Tapping sleeves for 18-inch and larger pipe shall be mechanical joint type. Design and manufacture tapping sleeves for a working pressure of 150 psi.

2.9 TAPPING SADDLES
A. Design and manufacture tapping saddles for a working pressure of 200 psi. Saddle bodies shall be stainless steel. Saddle straps shall be corrosion resistant steel alloy. Saddle gaskets shall be positively confined O-ring gasket. The sleeve dimensions shall be such that the sleeves will not leak when installed on cast iron, ductile iron, or polyvinyl chloride pipe with outside diameter shown in ANSI/AWWA Standards.
B. Each saddle used for making a wet connection shall have a branch connection with a flange end. The inside diameter of each branch shall be oversized to permit entry and exist of tapping machine cutters. Each flange shall have a recess to center a tapping valve. Recesses shall meet the requirements of MSS SP-60. Flange dimensions and drilling shall meet the requirements of ANSI B16.1.
C. Each saddle used for making a dry connection shall have a branch connection with a flange or mechanical joint end. Flange dimensions and drilling shall meet the requirements of ANSI B16.1. Nuts and bolts for flange joints shall meet the requirements of ANSI/AWWA C110/A21.10 and be zinc-coated alloy steel. Gaskets shall comply with ANSI/AWWA C110/A21.10, be full face and rubber, or as approved by the Public Works Director. Mechanical joints and accessories shall meet the requirements of ANSI/AWWA C111/A21.11.
D. Gaskets used to seal joints between saddle bodies and tapped pipes shall be O-ring type, circular in cross section, and made of natural or synthetic rubber with a Durometer Hardness of 70 ± 5.

2.10 FLANGE-MECHANICAL JOINT ADAPTERS
Flange-mechanical joint adapters shall be Dresser Style 127, Smith-Blair Type 912 or as approved by the Public Works Director.

2.11 AIR AND VACUUM VALVE CHAMBERS
A. Air and vacuum valve chambers shall be 4-foot diameter precast concrete manhole barrels with precast concrete flat slab tops. Precast manhole barrels shall meet the requirements of ASTM C478.
B. Air and vacuum valve chamber access frames and cover shall be Neenah R-1915-G, or equal. Cast the word "WATER" in each cover.

2.12 WATER SERVICES
A. Pipe shall be seamless copper tubing and shall meet the requirements of ASTM B88, Type "K."
B. Fittings and Couplings: Couplings for copper tubing shall be copper to copper or copper to iron, as required, and shall meet the applicable requirements of AWWA C800, ASTM B-62 for 85-5-5-5 composition bronze, and ANSI B2.1. Fittings and couplings shall be Ford Products, Pack Type Compression Joints, or equal.
C. Service connections made to a PVC water main shall be made using a stainless steel saddle with a corporation stop.

PART 3 – EXECUTION
3.1 INSPECTION
Inspect water main pipe, fittings, valves, hydrants, and appurtenances prior to installation. Promptly remove damaged or unsuitable products from the job site. Replace damaged or unsuitable products with undamaged and suitable products.

3.2 LAYING OF WATER MAINS
A. Proper tools and facilities shall be provided and used by the Contractor for safe working conditions.
B. Lay and maintain pipe to the lines and grades shown on the drawings or to the minimum depth specified in this Article. Install fittings, valves and hydrants in the locations shown on the drawings.
C. When the exact location of buried utilities is unknown and piping is to be constructed parallel and close to said utilities, adjust the alignment of the piping to least interfere with these utilities. This applies unless otherwise shown on the drawings or specified by the Public Works Director.
D. All crossings of water mains and sanitary sewers or storm sewers must be in accordance with 327 IAC 8-3.2-9. Water mains shall be laid at least 10 feet horizontally from any existing sanitary sewer, sewage force main, or storm sewer. The distance shall be measured from outside edge of water main to outside edge of the sanitary sewer or storm sewer. Water mains crossing sanitary sewer, sewage force mains, or storm sewer shall be laid to provide a minimum vertical distance of 18 inches between the outside of the water main and the outside of the sanitary sewer, force main, or storm sewer. The 18-inch separation shall apply whether the water main is over or under the sewer or force main. Lay water mains at crossings of sewers and force mains so a full length of water main pipe is centered on the sewer or force main whenever possible.
E. No watermains shall be within eight (8) feet of a sanitary sewer manhole, a storm sewer manhole, or a drainage grate support structure as measured from the outside edge of the water main to the outside edge of the sanitary sewer manhole, storm sewer manhole, or drainage grate support structure, per 327 IAC 8-3.2-9.e.
F. All piping shall be laid at a depth that provides at least 4'-6" of cover. Cover shall be measured as the vertical distance from the top of the pipe to the finish grade elevation.
G. Laying of water mains shall meet the requirements of ANSI/AWWA C600, unless otherwise specified in this Section.
H. Shape the bottom of the trench to give uniform circumferential support of the lower quarter of each pipe.
I. Do not lay pipe in water or when the trench or weather conditions are unsuitable for proper installation.
J. As each length of pipe is placed in a trench, joint the pipe being laid to the previously laid pipe. Bring the pipe to correct line and grade. Secure the pipe in place with bedding tamped under the pipe. Tamp bedding up to the centerline of the pipe.
K. Deflection from a straight line or grade shall not exceed the limits specified in this Section. If the alignment requires joint deflections in excess of the allowable deflection per joint, furnish and install fittings or a sufficient number of shorter lengths of pipe.
L. Provide thrust restraint at horizontal and vertical deflection fittings and at tees, plugs, tapping sleeves and tapping saddles. Restraint shall be concrete thrust blocking or restrained joint piping.
M. Where concrete thrust blocking is used, cover the fitting to be blocked with visqueen or a heavy duty grease to prevent adherence of the concrete to the fitting.
N. Block the open end of the pipe at the close of each day's work to prevent contamination from dirt or rain water and entry of any animal or foreign material.
O. Lower pipe, fittings, valves and hydrants into the trench by hand, hoists or ropes or other suitable tools or equipment that will not damage products, coatings or linings. Do not drop or dump pipe, fittings, valves, or hydrants into the trench.
P. Water main designs that require crossing a county legal drain shall be approved and constructed per the latest standards of the Hamilton County Surveyor's Office.

3.3 SETTING VALVES, VALVE BOXES AND FIRE HYDRANTS
A. Clean the interiors of valves and hydrants of foreign matter before installation. Tighten stuffing boxes. Inspect valves and hydrants in opened and closed positions to ensure all parts are in working condition.
B. Set valves and valve boxes plumb. Center valve boxes on the valves or valve operators. Locate valves outside the area of roads and streets where feasible. Tamp backfill around each valve box to a distance of 4 feet on all sides of the box or to the undisturbed trench face if less than 4 feet.
C. Set hydrants plumb with the pumper nozzle facing the street. The centerline of the outlet nozzles shall be at least 18 inches or at most 30 inches above finished grade at a hydrant. Install hydrant extensions where required to bring hydrant to proper elevation. Set each hydrant upon a slab of stone or concrete not less than 4 inches thick and 15 inches square. Wedge the side of each hydrant opposite the pipe connection against the undisturbed trench face to prevent the hydrant from blowing off the branch connection. Compact the backfill around each hydrant to finish grade. Furnish and install a gate valve and valve box in each hydrant branch connection. In the field, (Westfield) apply two coats of MAB Fire Protection Red (7068), (Noblesville) MAB Caution Yellow (7077) to the fire hydrants installed. All installed hydrants meeting the requirement of Section 2660; Para. 2.6 (a), shall be painted by the contractor either MAB
Fire Protection Red (7068), within the Westfield Washington Fire Department jurisdiction or MAB Caution Yellow (7077), within the Noblesville Fire Department jurisdiction. A three (3) foot clear space shall be maintained around the circumference of fire hydrants except as otherwise required or approved.
D. All inline water valve box caps should be painted blue. All hydrant valve caps should be painted MAB Fire Protection Red (7068).

3.4 CONNECTING TO EXISTING MAINS
A. The Contractor shall locate and verify exact size of all existing mains, both horizontally and vertically. Additionally, allow adequate time, after location and prior to making new connections, for changes in the connection location and size. Backfill excavation immediately after main is located and measured.
B. Make each wet connection with a tapping valve and tapping sleeve. Install and hydrostatically test each tapping valve and tapping sleeve assembly prior to tapping existing water main. Inspect each tapping valve prior to tapping existing water main. Open and close tapping valves, and inspect tapping valves in opened and closed positions to ensure all parts are in working condition. Inspect each tapping valve immediately before connecting tapping machine to ensure the tapping valve is open. Install watertight plug on the tapping valve outlet and backfill excavation if existing water main is not tapped within 48 hours after installing tapping valve and tapping sleeve or tapping saddle assembly. Install watertight plug on the tapping valve outlet and backfill excavation if new water main is not connected to tapping valve within 48 hours after making tap in existing water main.
C. Make each dry connection with fittings and valves indicated on the drawings. Furnish and install sleeves required to complete connections. All required pipe, fittings, valves, tools, and equipment shall be at the connection site prior to starting connection. Wash interior of new pipe, fittings, and valves with a solution containing 50 mg/1 of chlorine prior to making connection. Make connections at night and on weekends when required. The Owner will operate existing valves. Install sufficient water main and restrain joints so existing water mains can be up in service immediately after connection is completed. Inspect joints and eliminate leaks immediately after connection is completed and existing mains are put in service. Install watertight plugs on open ends of pipe and valves, and backfill excavation if new water main is not connected to dry connection within 48 hours after completing dry connection.

3.5 JOINTING
A. Ductile Iron Push-on Joints
1 Pipe must be cleaned and installed as specified by the manufacturer and ANSI/AWWA C600 requirements. Additionally, all lumps, blisters, excess bituminous coating and foreign material must be removed from the bell and spigot end of each pipe.
2 For restrained push-on joints, move the loose retainer ring into position against the retainer bar on the spigot end of the pipe being installed. Loosely assemble the joint bolts and nuts.
3 Deflect pipe after jointing, if deflection is required. The amount of deflection shall not exceed the limits shown in the following table:

Pipe Size	Maximum Deflection Angle	Maximum Deflection Based Upon 18-Foot Pipe Length
4"	5°	18-1/2"
6"	5°	18-1/2"
8"	5°	18-1/2"
10"	5°	18-1/2"
12"	5°	18-1/2"

4. For restrained push-on joints, pull the nuts to a uniform tightness by hand or with a short wrench. Do not pull the spigot of the pipe being installed against the back of the bell of the receiving pipe. Engage at least a full nut on each bolt when joint deflection is required.

B. Polyvinyl Chloride Push-on Joints
1 Pipe must be cleaned and installed as specified by the manufacturer's requirements. Additionally, all joints must be free of all foreign material.
2 Deflect the pipe after jointing, if deflection is required. The amount of deflection shall not exceed the limits recommended by the pipe.

C. Mechanical Joints
1. Pipe must be cleaned and installed as specified by the manufacturer and AWWA C600 requirements. Additionally, all lumps, blisters, excess bituminous coating and foreign material must be removed from the bell and spigot end of each pipe.
2. Evenly tighten the nuts using a torque wrench. The torque shall be within the range listed in the following table:

Pipe Size	Bolt Size	Torque Range
4" thru 24"	3/4"	75 to 90 ft.-lb.

3. Deflect pipe, fittings or valves after jointing, if deflection is required. The amount of deflection shall not exceed the limits shown in the following table:

Pipe Size	Maximum Deflection Angle	Maximum Deflection Based Upon 18-Foot Pipe Length
4"	8° – 18'	31"
6"	7° –7'	27"
8"	5° – 21'	20"
10"	5° – 21'	20"
12"	5° – 21'	20"
14"	3° – 35'	13-1/2"
16"	3° – 35'	13-1/2"
18"	3° –0'	11"
20"	3° –0'	11"
24"	2° – 23'	9"

D. Shouldered Type Joints
1 Pipe must be cleaned and installed as specified by the manufacturer and AWWA C600 requirements. Additionally, all lumps, blisters, excess bituminous coating and foreign material must be removed from the bell and spigot end of each pipe.
2 The tightening torque shall not exceed the limits recommended by the joint manufacturer.
3 Deflect pipe, fittings, adapters or valves after jointing, if deflection is required. The amount of deflection shall not exceed the limits recommended by the joint manufacturer.

E. Threaded Joints
1. Pipe must be cleaned and installed as specified by the manufacturer and AWWA C600 requirements. Additionally, all lumps, blisters, excess bituminous coating and foreign material must be removed from the bell and spigot end of each pipe.
2. Do not overtighten joints.
3. Backing off made-up threaded joints to facilitate fit-up or alignment will not be permitted

F. Flange Joints
1 Pipe must be cleaned and installed as specified by the manufacturer and AWWA C600 requirements. Additionally, all lumps, blisters, excess bituminous coating and foreign material must be removed from the bell and spigot end of each pipe.
2 Do not overtorque nuts and bolts.

3.6 RESTRAINING AND SUPPORTS
A. Thrust Blocking
1 Construct thrust blocks of concrete having a 28-day compressive strength of at least 2,000 psi.
2 Lubricate fitting surfaces to prevent bonding between fittings and thrust blocks.
3 Construct thrust blocks between fittings and undisturbed soil. The area of thrust blocking bearing on undisturbed soil shall be at least the area indicated on the drawings. Construct thrust blocking so pipe and joints are accessible for repair and joint flexibility is not impaired.

B. Restrained joint piping shall be as specified in this Section. Distance from fitting to end of restraint shall not be less than that indicated on the drawings.

C. Mechanical Joint Rod Restraint
1. Mechanical joint rod restraint shall be from fitting to fitting.
2. The number of rods shall conform to the following table:

Pipe Size	Rod Size	Minimum No. of Rods
4"	3/4"	2
6"	3/4"	2
8"	3/4"	4
10"	3/4"	4
12"	3/4"	6
14"	3/4"	6
16"	3/4"	8
18"	3/4"	8
20"	3/4"	10
24"	3/4"	16

D. Pipe Supports
1 Furnish and install supports required to hold pipe, fittings and valves at the lines and grades indicated on the drawings, without causing strain upon pipe, fittings and valves.
2 Support piping by suitable saddle stands, concrete piers or hangers.
3 Locate supports where necessary, at least 8 feet on center.

3.7 AIR AND VACUUM VALVE CHAMBERS
A. Install air and vacuum valve chambers as indicated on the drawings.
B. Mortar for joints and plastering shall consist of one part Portland Cement and two parts fine sand. Lime may be added to the mortar used for brick work. Add lime in an amount of not more than 20% of the volume of cement. Complete fill joints between precast chamber sections. Joints shall be smooth and free from surplus mortar on the inside surface of the chamber. Plaster brick at the top of chambers with 1/2-inch of mortar.
C. Set frames and covers so the top of the cover will be flush with finished grade.
D. Vent air and vacuum valve outlets to the surface. Terminate vent outlets 3 feet above finished grade. Screen vents to prevent the entrance of insects. Paint air and vacuum valve vents yellow.

3.8 HYDROSTATIC TEST
A. Hydrostatic tests shall be performed on all water mains installed. The Contractor shall make arrangements with the Town Engineer and/or Town Representative for scheduling each test. Each test shall be performed on the day mutually agreed upon and in the presence of the Town Engineer and/or Town Representative.
B. The Contractor shall furnish equipment, temporary piping, pumps, fittings, gauges, and operating personnel necessary to conduct the tests. Water for testing may be obtained from the Owner.
C. The water mains may be tested in sections between valves when there is one or more intermediary valves in a water main.
D. Test procedures shall meet the requirements of AWWA Standard C600.
E. Each section of water main shall be complete, and thrust blocks shall have been in place for not less than 10 days prior to being tested.
F. Expel all air from the water main test section during the filling of the main and prior to the application of test pressure. Tap the water main at high points, if necessary, to release all air from the water main. Plug taps after the test is successfully completed. Plugs shall be watertight.
G. Test water mains at a static pressure of 150 pounds per square inch over a period of two consecutive hours. The test will be considered successful when the pressure drop over the test period is 5 pounds per square inch or less. If the pressure drop exceeds 5 pounds per square inch, repair leaks and repeat the test until the pressure drop over the test period is 5 pounds per square inch or less.

3.9 FLUSHING
A. Flush water mains and fire hydrants prior to disinfection. Flush water mains with a flushing velocity of at least 2.5 feet per second. Following are flows required to provide a flushing velocity of 2.5 feet per second:

Pipe Size	Inside Diameter	Flow at a Velocity of 2.5 Feet per Second
½"	0.622"	2.4 gpm
¾"	0.824"	4.2 gpm
1"	1.05"	6.8 gpm
1¼"	1.38"	12 gpm
1½"	1.61"	16 gpm
2"	2.07"	27 gpm
2½"	2.47"	38 gpm
3"	3.07"	58 gpm
4"	4"	98 gpm
6"	6"	220 gpm
8"	8"	390 gpm
10"	10"	620 gpm
12"	12"	880 gpm
14"	14"	1,200 gpm
16"	16"	1,600 gpm
18"	18"	2,000 gpm
20"	20"	2,500 gpm
24"	24"	3,600 gpm

B. Flush water mains and hydrants until the water discharged is clear.

3.10 DISINFECTION
A. Disinfect all new and repaired water mains prior to placing them in service. Disinfect pipe, fittings, valves and hydrants with a chlorine solution containing 50 mg/l ± 5 mg/l of available chlorine.
B. The chlorinating material shall be calcium hypochlorite . Calcium hypochlorite shall have 70% available chlorine by weight, and sodium hypochlorite shall have 5.25% to 14.7% available chlorine. Placing chlorine tablets in the mains during construction is not an acceptable method of disinfection. The following table shows the quantity of hypochlorite required to produce 50 mg/l of available chlorine per 100 feet of pipe.
C. Tap water mains where required to inject chlorine solution into all pipe, fittings, valves and hydrants installed and repaired. Inject chlorine solution into water mains. Leave the chlorine solution in the water mains for 24 hours or longer. Open and close valves in lines being disinfected several times during contact period.
Following the contact period, flush
Westfield Standard – 10/06 02660 – 21
the water mains with potable water until the chlorine residual is 1.0 mg/l or less.
D. Bacteriological Tests – The water main shall be tested for bacteriological quality after disinfection and final flushing. Two or more successive sets of bacteriologically satisfactory samples taken at 24-hour intervals must be recorded before the facilities are released for use. Bacteriological testing shall meet the requirements of the applicable regulatory agency. Disinfection shall be repeated if the piping is not bacteriologically acceptable. Repeat disinfection and testing until the mains are approved for service by the applicable regulatory agency.
E. Hose connections on fire hydrants shall not be used for collecting samples. Contact the applicable regulatory agency for sampling criteria and procedures.
F. The time for disinfection, bacteriological testing, and approval of the main for service shall be included in the contract time.
G. The Contractor shall be responsible for disposal of chlorinated disinfection waters. If the water is discharged in an open channel or storm sewer, the Contractor shall dechlorinate the disinfection waters to 0.05 mg/L of total chlorine.

3.11 COMPLETION SCHEDULING
Complete water mains as they are installed. Test, flush, sterilize, and place in service each part of the water main which is complete and can be placed in service without preventing work to continue on uncompleted parts of the new water mains.

PART 4 – FIGURES
4.1 INDEX

FIGURE DESCRIPTION
W-1 Water Main Installation Detail
W-2 Thrust Block Details
W-3 Restrained Joint Details
W-4 Steel Casing Detail
W-5 Connection to Existing Main
W-6 Gate Valve and Box
W-7 Fire Hydrant Details
W-8 ¾" Single Pit
W-8a ¾" Water Meter and Pit Detail (For Residential)
W-9 1" Water Meter and Pit Detail
W-10 2" Water Meter and Pit Detail
W-11 Double Water Service Detail
W-11a ¾" Dual Water Meter and Pit Detail (For Residential)
W-12 Irrigation System Connection Detail (Residential)
W-13 Standard Fire Service and Meter Vault
W-14 PVC Pipe Bedding Detail

END OF SECTION 02660

Know what's **below.**
Call before you dig.
Within Indiana Call
811 or 800-382-5544
24 Hours a Day, 7 Days a Week.
PER INDIANA STATE LAW IC 8-1-26. IT IS AGAINST THE LAW TO EXCAVATE WITHOUT NOTIFYING THE UNDERGROUND LOCATION SERVICE TWO (2) WORKING DAYS BEFORE COMMENCING WORK.

10505 N. College Avenue
Indianapolis, Indiana 46280
weihe.net
317 | 846 - 6611
800 | 452 - 6408
317 | 843 - 0546 *fax*
ALLAN H. WEIHE, P.E., L.S. - FOUNDER

WEIHE ENGINEERS
Land Surveying | Civil Engineering
Landscape Architecture

PROJECT NO.: W12.0262
DWG NAME: 120262-C301 spec.dwg
DESIGNED BY: EAC/MG
DRAWN BY: EAC/MG
CHECKED BY: JKS
DATE: 06.29.2012

DATE	BY	REVISIONS AND ISSUES
07/26/12	EAC/MG	50% CD SET
8/23/12	EAC	REVISIONS PER WESTFIELD REVIEW

JAMES K. SHINNEMAN REGISTERED No. 10200392 STATE OF INDIANA PROFESSIONAL ENGINEER
APPROVAL PENDING NOT FOR CONSTRUCTION

JAMES K. SHINNEMAN P.E. 10200392

PREPARED FOR:
EPIPHANY EVANGELICAL LUTHERAN CHURCH PHASE ONE
156TH AND DITCH ROAD, WESTFIELD IN
WATER SPECIFICATIONS
Part of the SE Corner of SW/1/4 of Section 10, Township 18 North, Range 3 East, Washington Township, Hamilton County, Indiana

SHEET NO.
C301A
PROJECT NO.
W12.0262

LOCATION: H:\2012\w120262\Engineering\design\conset\120262-C301 spec.dwg
LAYOUT: C301 – A WATER
DATE/TIME: August 24, 2012 – 12:08pm
PLOTTED BY: cartere

CHAPTER 400 STORM SEWER PIPES AND OPEN CULVERT MATERIALS
SECTION 401 GENERAL

401.01
Introduction

This section covers all work necessary for the construction of the storm sewer piping systems and related items complete, including catch basins and inlet drains, manholes, junction chambers, diversion chambers, outfall structures, and miscellaneous structures.

This specification covers the following types of materials for storm sewers, culverts, underdrains, inlet drains, conduits, and miscellaneous applications:

1. Reinforced Concrete Pipe and Fittings
2. Polyvinyl Chloride Pipe (PVC)
3. Corrugated Metal Pipe
4. Structural Plate Arches
5. Aluminum or Aluminized Steel Pipe and Structural Plate
6. Multi-Plate Pipe and Pipe Arches
7. PVC Composite Pipe
8. Corrugated Polyethylene Pipe– SSD (Perforated and Non–Perforated)

All lots shall have access to a subsurface or storm drain or open ditch.

Storm sewer systems shall have a minimum of four hundred (400) feet between structures.

This specification requires project plans and construction specifications to be submitted to and approved by all appropriate regulatory agencies prior to beginning any work. Before construction and preferably before fabrication, the Contractor shall submit to the Town of Westfield Public Works Department for approval calculations on the thickness or strength class and drawings showing pipe lengths, joints, and other construction and installation details.

Pipe Marking

Each length of pipe shall bear the name or trademark of the manufacturer, the location of the plant, and the date of manufacture. Each length shall likewise be marked to designate the class or strength of the pipe. The marking shall be made on the exterior or interior of the pipe barrel near the bell or groove end and shall be plainly visible.

401.02
Minimum Size for Storm Sewers

The minimum diameter of all storm sewers shall be 12 inches. When the minimum 12–inch diameter pipe will not limit the rate of release to the required amount, the rate of release for detention storage shall be controlled by an orifice plate or other device, subject to acceptance of the Town of Westfield Public Works Department.

401.03
Materials

Manholes, Inlets, and Other Structures

Storm sewer manholes and inlets shall be constructed of precast reinforced concrete. Material and construction shall conform to the latest edition of the Indiana Department of Transportation (INDOT) "Standard Specifications", Sections 702 and 720.

Materials for manholes, junction chambers, diversion chambers, and miscellaneous concrete structures shall comply with the following:

1. Cement shall be Portland cement and shall meet the requirements of ASTM Specification C150, ACI 301, and ACI 318. Concrete for precast manhole sections shall be 3000 psi concrete. Monolithic manholes shall use 4000 psi concrete. Ready–mix concrete shall conform to ASTM C94, Alternate 2. Maximum size of aggregate shall be 3/4 inch. Slump shall be between 2 and 5 inches.

2. Forms for chamber and structures shall be plywood or other approved material. Steel forms shall be used for the inside face of monolithic concrete manholes.

3. Reinforcing steel shall conform to ASTM A615, Grade 60 deformed bars, or ASTM A616 Grade 60 deformed bars.

4. Mortar Materials:

   a. Sand – ASTM Designation C144, passing a No. 8 sieve.
   b. Cement – ASTM Designation C150, Type 1.
   c. Water – shall be potable.

The manufacturer shall provide openings for sewers entering and leaving the manhole. Any additional openings needed to be made in the field shall be made by drilling holes at least 1/2 inch in diameter with a maximum spacing of 3 inches.

Manhole steps shall be made from a steel reinforcing rod encapsulated in a copolymer polypropylene resin. The manhole steps shall equal or exceed OSHA requirements.

Any other special manholes, junction chambers, diversion chambers, and miscellaneous concrete structures shall be constructed as detailed on the drawings.

Manhole bases shall be set on a minimum of six (6) inches of #8 aggregate.

Concrete end sections shall have a minimum of a twenty–four (24) inch toe plate, either poured in place or precast, bolted to the end section per Standard Detail (ST–30). Corrugated end sections with toe plates shall require Westfield Public Works approval.

Catch Basins

During construction, precautionary measures such as adequate screening of grates shall be maintained to deter earth and other materials from entering the drains.

Catch Basin, for sediment control, locations to be determined by a Professional Engineer, and approved by the Town of Westfield Public Works Department. Catch Basins shall be located within easily accessible dedicated easements or right of way of sufficient size to facilitate the required maintenance of these structures.

Catch basins and curb inlet structures which are two (2) feet by two (2) feet in size shall not have a depth deeper than four (4) feet from the invert of the lowest pipe to the lowest part of the rim elevation of the casting. All structures which do not meet this criteria shall be a manhole type which is forty–eight (48) inches in diameter.

Castings

Cast iron or ductile iron frames and gratings for catch basins and drain inlets shall be as shown on the drawings. Bearing surfaces shall be clean and shall provide uniform contact. Castings shall be tough, close–grained gray iron, sound, smooth, clean, free from blisters, blow holes, shrinkage, cold shuts, and all defects and shall conform to ASTM A48 Class No. 30–B.

During construction, precautionary measures such as adequate screening of grates shall be maintained to deter earth and other materials from entering the drains.

The following castings types are required:
1. Manholes – Neenah R 1772 A or equivalent
2. Beehive Inlets – Neenah R 4342 or equivalent
3. "Roll Curb" Inlets – Neenah 3501 – TR or TL or equivalent
4. "Chair Back" Curb Inlet – Neenah 3287 – 10V or equivalent
5. Other types shall require approval of the Westfield Public Works Department.

Curb inlets castings which possess open backs or have grate bars parallel to traffic flow (are not "bicycle safe) will not be accepted by the Westfield Public Works Department.

Storm sewer castings manhole covers, beehive inlets, curb inlets or other approved casting shall have the following phrases cast in recessed letters two (2) inches in height:
1. "Storm Sewer"
2. "Drains to River" or "Drains To Waterway"
3. "Dump No Waste"
4. Other phrases shall require approval of the Westfield Public Works Department.

All castings frames shall have a horizontal bearing surface around the entire perimeter of the frame in order to support the cover or grate.

Bench Walls

Bench walls shall be shaped and formed for a clean transition with proper hydraulics to allow the smooth conveyance of flows through the structure. The bench wall shall form a defined channel, to a minimum height of the spring line of the pipe. Bench walls shall be formed using full depth Class "A" concrete. Solid concrete block, stone or sand shall not be permitted as a base or filler for the construction of the bench wall.

Reinforced Concrete Pipe and Fittings

Reinforced concrete pipe and fittings shall conform to ASTM C76, latest revision, for circular pipe and ASTM C507 for elliptical pipe.

Reinforced concrete pipe and fittings for normal conditions shall be reinforced in accordance with ASTM C76, Class III, IV or V, Wall B (minimum). Acceptance shall be on the basis of Subsection 4.1.1 of ASTM C76.
Circumferential reinforcing in circular pipe shall be required. Only with approval from the Westfield Public Works Department will elliptical reinforcing or combination of elliptical and circumferential reinforcing or part circular reinforcing shall be permitted, in circular pipe.

Concrete pipe shall be steam cured and shall not be shipped from point of manufacture for at least five days after having been cast.

Joints shall conform to the requirements of ASTM C443. Gaskets shall be of an oil resistant type having a maximum swell of 90% when tested in accordance with ASTM D471. Lubricant for jointing shall be approved by gasket manufacturer. All rubber gaskets similar to and equal to "Press–Seal" or "Tylox" conforming to ASTM Designation C443, latest revision. The gasket shall be attached to the spigot of the pipe and shall be the sole element depended upon to make the joint flexible and practically watertight.

Butyl mastic joint sealant in rope or trowel applied form specifically made for permanently sealing joints in tongue and groove concrete sewer pipe. The material shall adhere tightly to the pipe surface and form a tight, flexible joint. The material shall have been in use for at least five years.

Test results and material specifications shall be submitted to the Westfield Public Works Department and shall have been approved prior to use on the project.

Polyvinyl Chloride Pipe and Fittings

Polyvinyl chloride (PVC) pipe and fittings shall comply with ASTM D 3034.

Corrugated Metal Pipe and Pipe Arches

The following specifications shall govern the manufacture of the corrugated steel pipe and pipe arches.

1. Specifications for Zinc Coated (galvanized) Steel Sheets (ASTM A444).
2. Manufacture of Corrugated Steel Culverts and Underdrains (AASHTO M–36).
3. Structural Plate for Pipe, Pipe Arches, and Arches (AASHTO M–167.
4. Bituminous Coated Corrugated Steel Pipe and Arches (AASHTO M–190).
5. Sheet Material (ASTM A525).

Bituminous Coated Welded Seam Helically Corrugated Steel Pipe

The pipe shall be fabricated from flat coils. The base metal, spelter coating, and fabrication shall meet the applicable requirements of AASHTO M–36.

Corrugations shall be 2–2/3–inch pitch by 1/2–inch depth. Each pipe shall have two annular corrugations rolled in each end. After the ends are rolled, the pipe shall be coated with bituminous material, inside and outside, to a minimum thickness of 0.05 inch as required by AASHTO M–190 for Type A coating.

Bituminous Coated and Paved Invert Welded Se Corrugated Steel Pipam Helicallye

The pipe shall be fabricated from flat coils. The base metal, spelter coating, and fabrication shall meet the applicable requirements of AASHTO M–36.

Corrugations shall be 2–2/3–inch pitch by 1/2–inch depth. Each pipe shall have two annular corrugations rolled in each end.

After the ends are rolled, the pipe shall be coated with bituminous material, inside and outside, to a minimum thickness of 0.05 inch. In addition, bituminous material shall be applied to form a smooth pavement in the bottom 25% of pipe and in the bottom 40% of pipe arch as required by
AASHTO M–190 for Type C coating.

Smooth Lined Welded Seam Helically Corrugated Steel Pipe

The pipe shall be fabricated from flat coils. The base metal, spelter coating, and fabrication shall meet the applicable requirements of AASHTO M–36.

Corrugations shall be 2–2/3–inch pitch by 1/2–inch depth. Each pipe shall have two annular corrugations rolled in each end. Each pipe shall have two lifting lugs welded to the outside of the pipe.

After the ends have been rolled, the pipe shall be coated with bituminous material, inside and outside, to a minimum thickness of 0.05 inch as required by AASHTO M–190 for Type A coating. The pipe shall be centrifugally lined on the inside with bituminous material to form a smooth surface which fills the corrugations to a minimum thickness of 1/8 inch above the crests of the corrugations. The bituminous lining material shall meet the requirements of AASHTO M–190.

Bituminous Coated Pipe Couplings

Coupling bands shall be the same base metal and spelter coating as the pipe. Bands shall be 0.064–inch thick and 10–1/2 inches wide. Bands shall be bituminous coated and shall have two corrugations 7–5/8 inches center to center. Bands 12–inch diameter through 30–inch diameter shall be one–piece, and 36–inch diameter through 96–inch diameter shall be two–piece. Band laps 12–inch diameter through 48–inch diameter shall be joined by one galvanized bar, bolt, and strap connector. Band laps 54–inch diameter through 96–inch diameter shall be joined by two galvanized bar, bolt, and strap connectors.

Aluminum Alloy Structural Plate

Aluminum alloy plates and fasteners intended for use in the construction of structural plate pipe and pipe arch for storm sewers shall meet the applicable requirements of AASHTO M–219. The plate shall be fabricated from aluminum alloy 5052 H141. The chemical composition of the plates shall conform to ASTM B209 alloy 5052.

The corrugations shall have a pitch of 9 inches plus or minus 3/8 inch and depth of 2–1/2 inches plus or minus 1/8 inch. The inside crown radius of the corrugations shall be not less than 2 inches.

The structural plate pipe or arches shall be assembled in accordance with the manufacturer's erection instructions and in accordance with the drawings.

Aluminized Steel Pipe and Arches

Aluminized coated corrugated steel pipe and pipe arch intended for use in the construction of storm sewers shall meet the applicable requirements of AASHTO M–36. Sheet material shall meet the latest revision of ASTM A525 and AASHTO M–274. The coils from which the pipe is produced shall be coated with 1.0 ounce per square foot of commercially pure aluminum. Pipe shall be furnished circular or as a pipe–arch shape as required and shall be fabricated with helical corrugations and a continuous welded seam extending from end to end of each length of pipe.

Each end of each pipe with the welded seam shall have two annular corrugations reformed to permit joining with hugger bands. Coupling bands shall be hugger bands.

Multi–plate Pipe and Pipe Arches

Multi–plate pipe and pipe arch structures shall be in accordance with AASHTO M–167. They shall be made with steel sections with corrugations 6 inches wide by 2 inches deep running at right angles to the section.

Bolts and nuts shall be special heat–treated galvanized 3/4–inch diameter bolts in accordance with ASTM specifications.

Multi–plate pipes and pipe arches shall be designed in accordance with the manufacturer's design criteria and in accordance with the drawings.

Detailed instructions regarding erection shall be furnished by the manufacturer.

PVC Composite Pipe and Fittings

ABS or PVC composite pipe and fittings shall conform to ASTM D 2680, Latest Revision.

Corrugated Polyethylene Pipe and Fittings

Corrugated polyethylene pipe shall comply with the requirements for materials, test methods, dimensions, and marking in accordance with AASHTO M–252 for pipe diameters 6" – 10", AASHTO M–294 for pipe diameters of 12" – 48", and AASHTO MP7 for 54" and 60". The resin material shall meet ASTM D3350 cell classification 335400C.

The pipe lengths shall be connected using a gasketed, bell and spigot joint. This joint shall consist of a factory installed, gasketed double bell polyethylene coupling, a factory welded bell or integral bell. The spigot end of the pipe shall be furnished with a factory installed elastomeric profile "Oring" rubber gasket that meets ASTM F–477.

The pipe shall be shipped with a removable wrap to protect the gasket.

Provide lubrication to the joint prior to pushing together.

At least two (2) corrugations of the spigot end must insert into the bell end.

All HDPE pipe shall be certified through the Plastic Pipe Institute (PPI) Third Party Certification Program. All HDPE pipe delivered and installed shall bear the Third Party Administered PPI Seal.

Subsurface Drain Tiles

Double wall smooth bore corrugated polyethylene tile, manufactured under specification ASTM F 667, shall be required for all subsurface drain tile installed in swales. Single wall corrugated polyethylene drain tile shall be required for curb sub–grade drainage.

Polyethylene tile shall possess male and female pipe ends, which allow the construction of overlapping, gasket pipe joints, in conformance with the requirements of ASTM D 3212. The gasket material shall conform to all requirements of ASTM F 477. As an alternative, pipe joints utilizing external couplings bands will be accepted, provided the minimum AASHTO requirements for satisfying soil tightness are also achieved.

Storm sewer pipe shall be of the size shown on the drawings and shall meet all requirements of these specifications. Subsurface drains (SSD) shall have a minimum of four hundred (400) feet between structures. Subsurface drains shall have clean–outs installed every 400 feet or at changes in direction.

CHAPTER 500 INSTALLATION OF STORMWATER FACILITIES
SECTION 501 GENERAL

501.01
Pipe Cover, Grade, and Separation from Sanitary Sewers

Pipe

Pipe grade shall be such that, in general, a minimum of 2.0 feet of cover is maintained over the top of the pipe. If the pipe is to be placed under pavement, then the minimum pipe cover shall be 2.5 feet from top of pavement to top of pipe. Uniform slopes shall be maintained between inlets, manholes and inlets to manholes. Final grade shall be set with full consideration of the capacity required, sedimentation problems, and other design parameters. Minimum and maximum allowable slopes shall be those capable of producing velocities of between 2.5 and 10 feet per second, respectively, when the sewer is flowing full. Maximum permissible velocities for various storm sewer materials are listed in Table 501–1. A minimum of 2.0 feet of vertical separation between storm sewers and sanitary sewers shall be required. When this is not possible, the sanitary sewer must be encased in concrete or ductile iron within 5 feet, each side, of the crossing
centerline.

Rear Yard Swale

Rear yard swales shall have a minimum slope of 2% gradient. Swales less than a 2% gradient are required to have double–wall perforated drain tile installed two (2) feet below the invert of the swale. Minimum swale slope shall be greater than 1% gradient. Subsurface drains shall have a minimum slope of .5% gradient.

Proposed road grades will be required to be graded within two (2) inches of the proposed subgrade prior to installation of SSD. Trench width for SSD shall be a minimum of three (3) inches on both sides of the SSD, with a minimum trench width of twelve (12) inches.

501.02
Alignment

Storm sewers shall be straight between manholes and/or inlets.

501.03
Manholes/Inlets

All Manholes and Inlets must be pre–stamped with an appropriate message per the Town of Westfield Public Works Department Standards. Manholes and/or inlets shall be installed to provide human access to continuous underground storm sewers for the purpose of inspection and maintenance. The casting access minimum inside diameter shall be no less than 22 inches or a rectangular opening of no less than 22 inches by 22 inches. Manholes shall be provided at the following locations:

1. Where two or more storm sewers converge.
2. Where pipe size or the pipe material changes.
3. Where a change in horizontal alignment occurs.
4. Where a change in pipe slope occurs.
5. At intervals in straight sections of sewer, not to exceed the maximum allowed. The maximum distance between storm sewer manholes shall be as shown in Table 501–2.

In addition to the above requirements, a minimum drop of 0.1 foot through manholes and inlet structures should be provided. Pipe slope should not be so steep that inlets surcharge (i.e. hydraulic grade line should remain below rim elevation).

Manhole/inlet inside sizing shall be according to the Town of Westfield Public Works Department Standards. Note that the Town of Westfield Public Works Department may require the applicant to provide pre–treatment BMPs prior to discharge of the storm sewer line into a pond.

501.04
Installation and Workmanship

Bedding and backfill materials around storm sewer pipes, sub–drains, and the associated structures shall be according to the Town of Westfield Public Works Department Standards. The specifications for the construction of storm sewers and sub–drains, including backfill requirements, shall not be less stringent than those set forth in the latest edition of the "INDOT Standard Specifications". Additionally, ductile iron pipe shall be laid in accordance with American Water Works Association (AWWA) C–600 and clay pipe shall be laid in accordance with either American Society of Testing Materials (ASTM) C–12 or the appropriate American Association of State Highway and Transportation Officials (AASHTO) specifications. Dips/sags on newly installed storm systems will not be allowed. Also, infiltration from cracks, missing pieces, and joints shall not be allowed. Variations from these standards must be justified and receive written acceptance from the Town of Westfield Public Works Department. All structures shall require
inspection prior to backfill.

501.05
Special Hydraulic Structures

Special hydraulic structures required to control the flow of water in storm runoff drainage systems include junction chambers, drop manholes, stilling basins, and other special structures. The use of these structures shall be limited to those locations justified by prudent planning and by careful and thorough hydraulic engineering analysis. Certification of special structures by a certified Structural Engineer may also be required.

The use of stormwater lift stations will not be permitted under any circumstances.

501.06
Connections to Storm Sewer System

Unless otherwise approved, perforated subsurface drain tiles, footer drains, or sump pumps lines shall connect to a storm structure. Storm sewer connections shall be provided by either precast or drilled holes, which are to be a minimum of two (2) inches larger the O.D. of the connecting tile. Drain tile connections shall be made with either "Tee" or "Wye" method.

Blind connections to storm sewer pipes shall not be allowed.

Subsurface tile as specified herein may be used to convey water collected in sump pits and footer drains to an acceptable storm sewer outlet, provided these drain tiles are properly sized to accept these flows.

Gutter or building drains shall not be allowed to outlet directly into storm sewer systems.

To allow any connections to the storm sewer system, provisions for the connections shall be shown in the drainage calculations for the system. Specific language shall be provided in the protective covenants, on the record plat, or with the parcel deed of record, noting the ability or inability of the system to accommodate any permitted connections, for example, sump pumps and footing drains.

1. Sump pumps installed to receive and discharge groundwater or other stormwater shall be connected only into "T" subsurface drain (SSD) lateral connection if provided. When connection to the SSD is not possible, discharge pipe must daylight. Sump pumps installed to receive and discharge floor drain flow or other sanitary sewage shall be connected to the sanitary sewers. A sump pump shall be used for one function only, either the discharge of stormwater or the discharge of sanitary sewage, each being connected to the respective receiving system only.
2. Footing drains and perimeter drains shall be connected only into "T" subsurface drain (SSD) lateral connection if provided. When connection to the SSD is not possible, discharge pipe must daylight.
3. All roof downspouts, roof drains, or roof drainage piping shall discharge onto the ground and shall not be directly connected to the storm drainage system. Variation from this requirement may be requested and granted by the Town of Westfield Public Works Department in special circumstances. No downspouts or roof drains shall be connected to the sanitary sewers.
4. Garage and Basement floor drains and water softener discharge shall not be connected to the storm sewers.
5. Swimming Pool drains shall not be connected to the storm sewers unless the water is dechlorinated prior to being connected to the storm sewer.

501.07
Inspection and Rejection of Pipe

The quality of all materials, the process of manufacture, and the finished pipe shall be subject to inspection and approval by the Westfield Public Works Department or designee. Such inspection may be made at the place of manufacture or on the work after delivery, or at both places; and the pipe shall be subject to rejection at any time on account of failure to meet any of the specifications' requirements even though sample pipes may have been accepted as satisfactory at the place of manufacture.

Prior to being lowered into the trench, each pipe shall be carefully inspected and those not meeting the specifications shall be rejected and at once removed from the work.

The Westfield Public Works Department shall have the right to cut cores from such pieces of the concrete pipe as he desires for such inspection and tests as he may wish to apply. The Developer/Contractor shall pay for the samples of an Independent Laboratory Testing.

Holes left by the removal of cores shall be filled in an approved manner by and at the expense of the manufacturer of the pipe.

The Westfield Public Works Department shall also have the right to take samples of concrete after it has been mixed, or as it is being placed in the forms or molds, and to make such inspection and tests thereof as he may wish.

Any pipe which has been damaged after delivery will be rejected and replaced solely at the Contractor's expense.

501.08
Handling Pipe

Each pipe section shall be handled into its position in the trench only in such manner and by such means as the Westfield Public Works Department or designee approves as satisfactory. As far as practicable, the Contractor will be required to furnish slings, straps, and other approved devices to permit satisfactory support of all parts of the pipe when it is lifted.

501.09
Notice to Westfield Public Works Department

The Westfield Public Works Department or designee shall be notified when the pipes are to be laid in the trench. At least 15 feet of the pipe shall, under ordinary circumstances, be laid before covering begins.

501.10
Laying Pipe

All pipes shall be reinspected for soundness and damage due to handling immediately before being lowered into the trench. Any pipe found to be unsound or damaged will be rejected and shall be removed immediately from the site of the work.

No portion of a Storm Sewer pipe, open culvert, manhole, inlet, or subsurface tile system shall be installed directly or indirectly onto frozen ground or with frozen backfill materials.

Where ground water is encounter, the contractor shall make every effort necessary to secure a dry trench bottom prior to installation of the storm water system. The contractor shall be required to maintain the groundwater level below the base of the excavation. The Town, nor the Westfield Public Works Department, will not assume any liability for the actions of the Developer or
Contractor in the performance of the required dewatering operation. If trench conditions outlined in this section cannot be achieved, the Westfield Public Works Department or designee may terminate installation until such efforts can be achieved.

All pipes shall be laid accurately to the required line and grade as shown on the drawings, and in the manner prescribed by the pipe manufacturer and appropriate ASTM Specifications, to form a close, concentric joint with the adjoining pipe and to bring the invert of each section to the required grade.

The supporting of pipe on block will not be permitted.

Pipe lying shall precede upgrade, beginning at the lower end of the sewer.

Practically watertight work is required, and the Contractor shall construct the sewers with the type of joint specified. Joints between precast structures shall be sealed with (1) An approved rubber gasket manufactured and installed in accordance with ASTM C 443, latest version, (2) A ½ inch diameter non–asphaltic mastic (Kent Seal or approved equal) conforming to AADHTO M–198 and Federal Specifications SS 521–A, or 4 (3) mortar or butyl rubber sealed on the outside and (4) mortar sealed on the inside and brushed smooth. The annular space between the pipe and precast structure walls shall be filled inside and outside with a grout mixture composed of 2 parts of fine aggregate and one part of Portland Cement or Class "A" Concrete.

All pipes shall be laid to the line and grade as shown on the drawings. Variations from a uniform line and grade as shown on the drawings shall be cause for the line to be rejected.

The ends of the pipe shall be satisfactorily cleaned just before laying, and the joint shall be made in a satisfactory manner in accordance with the recommendations of the manufacturer on particular type of joint. All joint work shall be done by experienced workmen.

All pipes shall be bedded as described in this specification under Pipe Bedding. Bell holes shall be excavated in advance of pipe laying so the entire pipe barrel will bear uniformly on the prepared subgrade.
Each length of pipe shall be mechanically pulled "home" with a winch or come–along against the section previously laid and held in place until the trench and bedding are prepared for the next pipe section. Care shall be taken in laying the pipe so not to damage the bell or the spigot end of the pipe. Mechanical means consisting of a cable placed inside the pipe with a winch, jack, or come–along shall be considered to pull the pipe home where pushing the pipe will not result in a joint going completely home and staying in place.

The Contractor shall use laser beam equipment, surveying instruments, or other proven techniques to maintain accurate alignment and grade.

Open excavation shall be satisfactorily protected at all times. At the end of each day's work, the open ends of all pipes shall be protected against the entrance of animals, children, earth, or debris by bulkheads or stoppers. The bulkheads or stoppers shall be perforated to allow passage of water into the installed pipe line to prevent flotation of the pipe line. Any earth or other material that may find entrance into the main sewer or into any lateral sewer through any such open end of unplugged branch must be removed at the Contractor's expense. The cost of all such plugs, and the labor connected therewith, must be included in the regular bid for the sewers.

Storm sewer which outlets into a Hamilton County Regulated Drain shall be approved, inspected, and constructed per the latest standards of the Hamilton County Surveyor's Office Standards.

501.11
Pipe Bedding and Haunching

Each pipe section shall be laid in a firm foundation of bedding material and haunched and backfilled with care.

Prior to pipe installation, carefully bring bedding material to grade along the entire length of pipe to be installed. To provide adequate support for the pipe, the following bedding procedures are recommended.

When Angular 60 to 12 mm (1/4 to 1/2–inch) clean graded stone, slag, or crushed stone material is used for bedding, little or no compaction is necessary due to the nature of the angular particles. A depth of 4 to 6 inches is generally sufficient to provide uniform bedding. If Class I material is used for bedding, it must also be utilized for haunching up to or higher than the spring line of the pipe to avoid loss of side support through migration of Class II haunching material into the bedding.

1. Take care with coarse sands and gravels and maximum size 20 mm (3/4–inch) materials, to provide uniformly compacted bedding. Excavate the bedding material or place it to opoint above the pipe bottom, determining such point by the depth of loose material resulting in the preparation of the bedding and the amount of compaction that will beresquired to bring the material to grade. Use hand or mechanical tamping to compact the bedding material to a minimum 85% Standard Proctor Density.
2. Slightly damp material will generally result in maximum compaction with a minimum of effort. If water is added to improve compaction or if water exists in the trench, take care to avoid saturation of Class II material, which could result in additional stability problems. Check grade of bedding after compaction.

Bedding material shall have a minimum thickness beneath the pipe of 4 inches (100 mm) or one eighth of the outside diameter of the pipe, whichever is greater, and shall extend up the sides of the pipe one–sixth of the outside diameter of the pipe.

The rigid pipe, such as concrete or ductile iron, backfill between the bedding material and a plane 12 inches (300 mm) over the top of the pipe shall be hand–placed finely divided earth, free from debris and stones, or granular backfill if required.

For flexible pipe, corrugated metal pipe, the placement of embedment material or haunching around the pipe must be done with care. The ability of the pipe to withstand loading in a trench depends a large part on the method employed in its installation. If crushed stone, pea gravel, or graded gravel or sand is used to backfill between the bedding material and a plane 12 inches (300mm) over the top of the pipe, it shall be hand placed. If fine sand, silt, or clayey gravels are used for initial backfilling over the pipe, the material shall be hand placed in 6– to 8–inch layers and hand compacted on both sides of the pipe to an elevation 12 inches (300 mm) over the top of the pipe. Care should be taken so not to compact directly over the pipe.

In yielding subsoils, the trench bottom shall be undercut to the depth necessary and backfilled with graded, crushed stone to form a firm foundation. Where excavation occurs in rock or hard shale, the trench bottom shall be undercut and a minimum of 6 inches (150 mm) crushed stone bedding placed prior to pipe installation.

501.12
Concrete Cradle (Class "A" Bedding)

Concrete cradles shall be constructed of Class "B" concrete and of the design shown on the detailed drawings.

501.13
Manholes and Other Structures

Manholes and other structures are to be constructed at locations shown on the drawings and in accordance with the following specifications:

Precast concrete manhole sections shall conform to ASTM Designation C478, except as modified herein:

1. The joint design of the precast sections shall consist of a bell or groove on one end of the unit of pipe and a spigot or tongue on the adjacent end of the joining section.
2. The joint shall consist of a flat rubber gasket attached to the spigot end of the precast manhole section and shall conform to Sections 6.1.6, 6.1.7 and 9 of ASTM Designation 443, latest revision.

Openings in manhole sections for sewer connections shall be cut at the point of manufacture and shall be circular or horseshoe shaped with grooved or roughened surfaces to improve mortar bond.

Manhole bases shall be cast–in–place concrete, reinforced as shown on the Standard Detail Sheet. Manhole bases shall be cast on a minimum of 6 inches of compacted crushed stone.

Manhole channels or inverts (flow lines) shall be preformed and poured with Class "B" concrete to the spring line of the connecting pipe. The finished invert shall be a semi–circular shaped smooth channel directing the flow to the downstream sewer.

Manhole frames and lids shall be of good quality cast iron, conforming to ASTM Designation A48 and as shown on Detail #2 on the Standard Detail Sheet (See Section 2–11 (C–1). Unless specifically designated otherwise, manhole castings shall be the non–locking type. The joint between the casting frame and cone section shall be fully mortared or gasketed and coated with butyl rubber or a coal tar epoxy coating upon reaching its final set to become a watertight joint.

Manhole steps shall be made from a steel reinforcing rod encapsulated in a copolymer polypropylene resin. Steps shall be placed as shown on the drawings.

TABLE 501–1
Typical Values of Manning's "n"

Material	Manning's "n"	MaximumVelocities (feet/second)
Closed Conduits		
Concrete	0.013	10
Vitrified Clay	0.013	10
HDPE	0.012	10
PVC	0.011	10
Circular CMP, Annular Corrugations, 2 2/3 x ½ inch		
Unpaved	0.024	7
25% Paved	0.021	7
50% Paved	0.018	7
100% Paved	0.013	7
Concrete Culverts	0.013	10
HDPE or PVC	0.012	10
Open Channels		
Concrete, Trowel Finish	0.013	10
Concrete, Broom Finish	0.015	10
Gunite	0.018	10
Riprap Placed	0.030	10
Riprap Dumped	0.035	10
Gabion	0.028	10
New Earth (1)	0.025	4
Existing Earth (2)	0.030	4
Dense Growth of Weeds	0.040	4
Dense Weeds and Brush	0.040	4
Swale with Grass	0.035	4

Source of manning "n" values: HERPICC Stormwater Drainage Manual, July 1995.
(1) New earth (uniform, sodded, clay soil)
(2) Existing earth (fairly uniform, with some weeds).

TABLE 501–2
Maximum Distance Between Manholes

Size of Pipe (Inches) (Feet)	Maximum Distance
All sizes	400

WEIHE ENGINEERS
Land Surveying | Civil Engineering
Landscape Architecture
10505 N. College Avenue
Indianapolis, Indiana 46280
weihe.net
317 | 846 - 6611
800 | 452 - 6408
317 | 843 - 0546 fax
ALLAN H. WEIHE, P.E., L.S. - FOUNDER

REVISIONS AND ISSUES	DATE	BY
01 DRAINAGE REVIEW	8/20/12	EAC/MC
2 REVISIONS PER WESTFIELD REVIEW	8/23/12	EAC

PROJECT NO. W12.0262
DWG. NAME: 12-0262-C301 spec.dwg
DESIGNED BY: EAC/MC
DRAWN BY: EAC/MC
CHECKED BY: JKS
DATE: 06/28/2012

JAMES K. SHINEMAN P.E. 10200392

PREPARED FOR:
EPIPHANY EVANGELICAL LUTHERAN CHURCH PHASE ONE
156TH AND DITCH ROAD, WESTFIELD IN

STORM SEWER SPECIFICATIONS

Part of the SE Corner of SW1/4 of Section 10, Township 18 North, Range 3 East, Washington Township, Hamilton County, Indiana

Know what's below. Call before you dig.
Within Indiana Call 811 or 800–382–5544
24 Hours a Day, 7 Days a Week.
PER INDIANA STATE LAW IC 8–1–26, IT IS AGAINST THE LAW TO EXCAVATE WITHOUT NOTIFYING THE UNDERGROUND LOCATION SERVICE TWO (2) WORKING DAYS BEFORE COMMENCING WORK.

SHEET NO. C301B
PROJECT NO. W12.0262

LOCATION: H:\2013\W12026\Engineering\design\construct\12026 - C301 spec.dwg
LAYOUT: 2 - 24x36 - 1 VIEW
DATE/TIME: August 24, 2012 - 12:08pm
PLOTTED BY: cotrere

WESTFIELD STANDARD – 2003
SECTION 02731 – GRAVITY SANITARY SEWERS

PART 1 – GENERAL

1.1 GENERAL

A. This section covers all work necessary for the installation of gravity sanitary sewers and related items complete, including manholes, junction chambers, diversion chambers, house services, and miscellaneous concrete structures.

B. Sewer pipe shall be the size shown on the drawings and shall meet all requirements of these specifications.

C. If a material type is shown on the drawings, that material shall be used in the installation unless otherwise noted in the specifications.

1.2 PIPE MARKING

Each length of pipe shall bear the name or trademark of the manufacturer, the location of the plant, and the date of manufacture. Each length shall likewise be marked to designate the class or strength of the pipe. The marking shall be made on the exterior or interior of the pipe barrel near the bell or groove end and shall be plainly visible.

1.3 SUBMITTALS

Before construction and preferably before fabrication, the Contractor shall submit to the Westfield Public Works Department for approval calculations on the thickness or strength class and drawings showing pipe lengths, joints, and other construction and installation details. All pipe furnished shall be fabricated only in accordance with the drawings and these specifications.

1.4 QUALITY ASSURANCE

A. Performance Tests: The Contractor shall test all gravity sewers constructed. The Contractor shall constantly check horizontal and vertical alignment. Testing for vertical deflection in the case of non–rigid pipe and sewer watertightness testing in the case of all gravity sewers and hydrostatic testing of ductile iron pipe shall be as specified in this Section.

B. Line and Grade Requirements: The Contractor shall provide assurance to the Westfield Public Works Department's representative that the sewer is laid accurately to the required line and grade as shown on the drawings. The Contractor shall utilize a laser beam instrument to lay and check the alignment and grade between manholes. Before proceeding with the next section of sewer, the last section shall be checked for proper line and grade. Variations from a uniform line and grade as shown on the drawings and described below shall be cause for the line to be rejected.

1. Variance from established line and grade shall not be greater than 1/32 of an inch per inch of pipe diameter and not to exceed 1/2 inch, provided that such variation does not result in a level or reverse sloping invert; provided also that the variation in the invert elevation between adjoining ends of pipe, due to non–concentricity of joining surface and pipe interior surfaces, does not exceed 1/64 inch per inch of pipe diameter or 1/2 inch maximum.

C. Test Sections

1. Initial Performance Test: An initial performance and leakage test will be performed on the first sections of sanitary sewer constructed of approximately 600 feet in length of each size and type sewer material installed. No additional sewer pipe shall be installed until the first section of sewer of each size and type of sewer material has satisfactorily passed the test for line and grade and the leakage test.

2. Subsequent Performance Testing: After the initial performance test and leakage test and as work progresses, the Westfield Public Works Department or designee may designate additional sections for testing as conditions in his opinion warrant. If a review of the Contractor's workmanship leads the Westfield Public Works Department or designee to question whether or not the tolerances and standards specified are being met, the Westfield Public Works Department or designee, reserves the right to select other locations and lengths to be tested. The Westfield Public Works Department or designee shall notify the Contractor of the location where a test is to be required not later than 15 days after the sewer installation has been completed. Unless otherwise authorized, the Contractor shall arrange to commence the test within 15 days after the sewer has been installed or 15 days after receiving notification by the Westfield Public Works Department, whichever date is later.

3. Final Performance Testing for Acceptance: Before acceptance for all new sanitary sewers, the Contractor and the Westfield Public Works Department or designee shall check all sewers, even if previously checked, for accurate alignment and grade. Also, all sanitary sewers shall be tested as specified in Articles 3.10 through 3.14 of this Section for watertightness. The program of testing whether by infiltration, exfiltration, air testing, or vacuum testing shall be determined by the Westfield Public Works Department.

1.5 LENGTH OF OPEN TRENCH

Except by permission of the Westfield Public Works Department not more than 450 feet of trench shall be opened at any one time. Not more than 30 feet of trench may be opened in advance of the completed pipe laying operation, and not more than one street crossing may be obstructed by the same trench at any one time.

1.6 RELATION TO WATER MAINS

A. Sewers must be laid at least 10 feet horizontally from any existing or proposed water main. The distance is to be measured edge to edge. Should specific conditions prevent this separation, the Contractor shall notify the Westfield Public Works Department for specific instructions regarding the treatment of the separation. Special conditions may allow installation of the sewer closer to a water main, provided that the water main is in a separate trench or on an undisturbed earth shelf located on one side of the sewer and at an elevation so the bottom of the water main is at least 18 inches above the top of the sewer. It may be necessary to install 150 psi water main pipe and joints as sewer pipe for the congested areas.

B. Whenever the sewer crosses a water main, it should be laid at least 18 inches below the main, or the water main should be relaid with fittings to cross over the sewer. The crossing shall be arranged so that the sewer joints will be equidistant and as far as possible from the water main joints.

C. When it is impossible to obtain proper horizontal and vertical separation as stipulated above, the sewer shall be designed and constructed equal to water pipe, and shall be pressure tested to assure watertightness prior to backfilling. Maximum distance between sewer pipe joints and water pipe shall be provided where vertical separation is a problem.

PART 2 – PRODUCTS

2.1 MATERIALS

A. Sewers 15 Inches or Smaller

1. Sewers 15 inches in diameter or smaller shall be PVC composite pipe, polyvinyl chloride pipe or ductile iron pipe.

2. PVC Composite Sewer Pipe and Fittings: PVC composite sewer pipe and fittings shall conform to ASTM D2680, latest revision.

3. Polyvinyl Chloride Pipe and Fittings

a. Polyvinyl chloride pipe and fittings shall conform to ASTM D3034 SDR 35, Type PSM, latest revision.

4. Ductile Iron Pipe and Fittings: Ductile iron pipe and fittings shall conform to the requirements of ANSI/ASTM A746, Ductile Iron Gravity Sewer Pipe.

a. Thickness class requirements of ductile iron pipe to be used in conveyance of sanitary sewage by gravity shall be minimum thickness of Class 350 unless otherwise noted for standard length pipe.

b. Outside surfaces of the pipe and fittings shall be bituminous coated complying with ANSI/AWWA A21.51/C151 and ANSI/AWWA A2110/C110.

c. Inside surfaces of all pipe, fittings and adapters shall be lined with cement mortar and a bituminous seal coat. Cement mortar lining and bituminous seal coat shall meet the requirements of ANSI/AWWA A21.4/C104.

d. Ductile iron pipe and fittings shall be push–on type conforming to ANSI A21.11 (AWWA C111), latest revision. Fittings shall be ductile iron and shall comply with ANSI Specification A21.10, latest revision, with mechanical joints for 150 psi working pressure.

5. Joints for PVC Sewer Pipe

a. Joints on PVC sewer pipe shall be the integral bell type gasketed joint designed so that when assembled the elastomeric gasket inside the bell is compressed radially on the pipe spigot to form a positive seal. The joint shall be so designed to avoid displacement of the gasket when installed in accordance with manufacturer's recommendations. The joint shall comply with the physical requirements of ASTM D3212, and the gasket shall be the only element depended upon to make the joint flexible and watertight.

b. All PVC Pipe entering a manhole shall have a manhole waterstop gasket as supplied by the manufacturer firmly clamped around the pipe at the manhole. If flexible entry type manhole system is used, the waterstop gasket is not required.

B. Fittings

1. Fittings such as wyes and bends shall be made in such a manner as will provide strength and watertightness at least equal to the class of the adjacent main line pipe to which they are jointed and shall conform to all other requirements specified for pipe of corresponding class and internal diameter. Joints shall be of the same type as used on the adjoining pipe.

2. Fabricated branches for wyes and tees shall be securely attached to the wall of the pipe in a watertight manner and shall be flush with the inside surface of the pipe. The branches shall have their axes perpendicular to the longitudinal axis of the pipe. Wye branches shall have their axes approximately 60 degrees for clay pipe and 45 degrees for concrete pipe from the longitudinal axis of the pipe, measured from the bell end. Pipe reinforcement shall not be interrupted beyond a radial distance of 3 inches outside of the fitting.

C. Manholes and Other Structures: Manholes shall be constructed of monolithic concrete or precast manhole sections. Precast manhole sections shall conform to requirements of ASTM Specification C478, latest revision.

1. Materials for manholes, junction chambers, diversion chambers, and miscellaneous concrete structures shall comply with the following:

a. Concrete for precast manhole sections shall be 3000 psi concrete. Monolithic manholes shall use 4000 psi concrete. Ready–mix concrete shall conform to ASTM C94 Alternate

2. Maximum size of aggregate shall be 1–1/2 inches. Slump shall be between 2 and 4 inches.

b. Forms for chamber and structures shall be plywood or other approved material. Steel forms shall be used for the inside face of monolithic concrete manholes.

c. Reinforcing steel shall conform to ASTM A615, Grade 40 deformed bars, or ASTM A616, Grade 40 deformed bars.

d. Mortar Materials
(1) Sand – ASTM Designation C144, passing a No. 8 sieve.
(2) Cement – ASTM Designation C150, Type 1.
(3) Water – shall be potable.

e. All joints shall be fully sealed and waterproofed. Rubber gaskets for precast concrete manhole sections shall meet the requirements of ASTM C443. The gasket shall be the sole element depended upon to make the joint flexible and watertight.

f. The manufacturer of the precast manholes shall provide core–drilled openings to produce a smooth, uniform, cylindrical hole of the proper size to accommodate a resilient connector meeting the requirements of ASTM C 923 for all sewers entering and leaving the manhole. The resilient connectors shall be either Press–Seal Gasket Corp., which provides PSX gasket or Press Wedge II; or similar flexible manhole sleeves furnished by Kor–N–Seal by NPG Systems, Inc.; or equal.

g. Precast manhole sections shall be steam cured and shall not be shipped from the point of manufacture for at least five days after having been cast. The exterior surface of each section shall be thoroughly coated with a coal tar epoxy type coating as manufactured by TNEMEC Co, Tnemec–46H413 Hi–Build Tneme–Tar; or approved equal by the Engineer. Final dry mils thickness shall be a minimum of 12 mils. Monolithic concrete manholes and other concrete structures shall be cured for a minimum of seven days and then coated in the field with a coal tar epoxy type coating as mentioned above.

h. Manhole castings shall be of good quality cast iron and/or ductile iron, conforming to ASTM Designation A48. Castings shall have a total weight of not less than 335 pounds and shall conform to the design of the manhole casting as shown on the standard detail sheet. Castings shall have three bolt holes equally spaced around base of frame and shall be securely anchored to cone section to provide a water tight–fit with three 3/8–inch stainless steel bolts and expansion shields. Unless specifically designated otherwise, manhole castings shall be the non–locking type.

i. Manhole steps shall be made from a steel reinforcing rod encapsulated in a copolymer polypropylene resin. The manhole steps shall equal or exceed OSHA requirements. Manhole steps manufactured by M. A. Industries, Inc., PS–I–PF, Clay & Bailey Mfg. Co., or equal, are acceptable.

j. Any other special manholes, junction chambers, diversion chambers, and miscellaneous concrete structures shall be constructed as detailed on the drawings.

k. The Contractor may, at his option, furnish and install a combination precast concrete base and first section with precut openings for services. Detailed drawings shall be submitted to the Westfield Public Works Department prior to manufacture.

l. Precast manhole sections shall have a lifting eye cast into the wall for lifting the section. Lifting holes through the precast section will not be allowed.

D. Grease Trap: Grease trap tank shall be constructed of 6000 psi concrete. All tank joints shall be sealed watertight with butyl rubber extrudible preformed gasket material. All outside riser ring surfaces shall be waterproofed 1/8" with trowelable grade butyl rubber back plaster.

PART 3 – EXECUTION

3.1 INSPECTION AND REJECTION OF PIPE

A. The quality of all materials, the process of manufacture, and the finished pipe shall be subject to inspection and approval by the Westfield Public Works Department. Such inspection may be made at the place of manufacture or on the work after delivery, or at both places; and the pipe shall be subject to rejection at any time on account of failure to meet any of the specifications' requirements even though sample pipes may have been accepted as satisfactory at the place of manufacture.

B. Prior to being lowered into the trench, each pipe shall be carefully inspected, and those not meeting the specifications shall be rejected and at once removed from the work.

C. The Westfield Public Works Department or designee shall have the right to cut cores from such pieces of the concrete pipe as he desires for such inspection and test as he may wish to apply. The cost to cut the cores and administer appropriate test shall be paid by the developer.

D. Holes left by the removal of cores shall be filled in an approved manner by and at the expense of the manufacturer of the pipe.

E. The Westfield Public Works Department or designee shall also have the right to take samples of concrete after it has been mixed, or as it is being placed in the forms or molds, and to make such inspection and tests thereof as he may wish. The cost to administer appropriate test shall be paid by the developer.

F. Any pipe which has been damaged after delivery will be rejected and replaced solely at the Contractor's expense.

3.2 HANDLING PIPE

Each pipe section shall be handled into its position in the trench only in such manner and by such means as the Westfield Public Works Department or designee approves as satisfactory. As far as practicable, the Contractor will be required to furnish slings, straps, and other approved devices to permit satisfactory support of all parts of the pipe when it is lifted.

3.3 NOTICE TO WESTFIELD PUBLIC WORKS DEPARTMENT

The Westfield Public Works Department or designee shall be notified when the pipes are to be laid in the trench. At least 15 feet of the pipe shall, under ordinary circumstances, be laid before covering begins.

3.4 LAYING PIPE

A. All pipe shall be reinspected for soundness and damage due to handling immediately before being lowered into the trench. Any pipe found to be unsound or damaged will be rejected and shall be removed immediately from the site of the work.

B. All pipe shall be laid accurately to the required line and grade as shown on the drawings, and in the manner prescribed by the pipe manufacturer and appropriate ASTM Specifications, to form a close, concentric joint with the adjoining pipe and to bring the invert of each section to the required grade. The supporting of pipe on block will not be permitted.

C. Pipe laying shall proceed upgrade, beginning at the lower end of the sewer.

D. All sewers shall be designed and constructed to give mean velocities, when flowing full, of not less than 2.0 feet per second (0.6 m/s), based on Manning's formula using an "n" value of 0.013. The following are the recommended minimum slopes which should be provided; however, slopes greater than these are desirable.

Minimum Sewer Size	Nominal Slope in Feet Per 100 Feet (m/100m)
8 inch (200 mm)	0.40
10 inch (250 mm)	0.28
12 inch (300 mm)	0.22
14 inch (350 mm)	0.17
15 inch (375 mm)	0.15
16 inch (400 mm)	0.14
18 inch (450 mm)	0.12
21 inch (525 mm)	0.10
24 inch (600 mm)	0.08
27 inch (675 mm)	0.067
30 inch (750 mm)	0.058
33 inch (825 mm)	0.052
36 inch (900 mm)	0.046
39 inch (975 mm)	0.041
42 inch (1050 mm)	0.037

E. Practically watertight work is required, and the Contractor shall construct the sewers with the type of joint specified.

F. All pipe shall be laid to the line and grade as shown on the drawings. Variations from a uniform line and grade as shown on the drawings shall be cause for the line to be rejected.

G. The ends of the pipe shall be satisfactorily cleaned just before laying, and the joint shall be made in a satisfactory manner in accordance with the recommendations of the manufacturer on particular type of joint. All joint work shall be done by experienced workmen.

H. PVC (polyvinyl chloride) gravity sewer pipe and fittings, ASTM Designation D3034 SDR 35, shall be installed in accordance with the directions contained in ASTM Designation D2321. Only materials classified as Class I will be acceptable for bedding, haunching, and initial backfill of the pipe placed and compacted in accordance with ASTM D2321.

I. Joints on PVC pipe shall be the integral bell type gasketed joint designed so that when assembled the elastomeric gasket inside the bell is compressed radially on the pipe spigot to form a positive seal. The joint shall be so designed to avoid displacement of the gasket when installed in accordance with the manufacturer's recommendations. The gasket shall be the only element depended upon to make the joint flexible and watertight.

J. All PVC pipe entering a manhole shall have manhole waterstop gasket as supplied by the manufacturer firmly clamped around the pipe. If flexible entry type manhole system is used, the waterstop gasket is not required.

K. All PVC pipe shall have a deflection test performed by the Contractor in the presence of the Westfield Public Works Department or designee.

L. All pipe shall be bedded as described in this specification under Pipe Bedding. Bell holes shall be excavated in advance of pipe laying so the entire pipe barrel will bear uniformly on the prepared subgrade.

M. Each length of pipe shall be mechanically pulled "home" with a winch or come–along against the section previously laid and held in place until the trench and bedding are prepared for the next pipe section. Care shall be taken in laying the pipe so not to damage the bell end of the pipe. Mechanical means consisting of a cable placed inside the pipe with a winch, jack, or come–along shall be considered to pull the pipe home where pushing the pipe will not result in a joint going completely home and staying in place. Pushing the pipe home shall be done by means of a block and push bar. Use of hydraulic excavating equipment as the means of pushing or moving the pipe to grade will not be permitted.

N. The Contractor shall use laser beam equipment to maintain accurate alignment and grade. A qualified operator shall handle the equipment during the course of construction. If bending of the laser beam due to air temperature variations or dust in the air is apparent "within the pipe" units, a fan shall be provided to circulate the air. However, air velocity shall not be so excessive as to cause pulsating or vibrating of the beam. Survey instruments may be used for checking alignment and grade if questions arise about the accuracy of the work.

O. Open excavation shall be satisfactorily protected at all times. At the end of each day's work, the open ends of all pipes shall be protected against the entrance of animals, earth, or debris by bulkheads or stoppers. The bulkheads or stoppers shall be perforated to allow passage of water into the installed pipe line to prevent flotation of the pipe line. Any earth or other material that may find entrance into the main sewer or into any lateral sewer through any such open end of unplugged branch must be removed at the Contractor's expense.

P. The Contractor shall conduct a leakage test as described in Sewer Tests of the specification on the first section of sewer of each size and type sewer material installed. No additional sewer pipe shall be installed until the first reach of sewer of each size and each type sewer material has satisfactorily passed the leakage test.

Q. The Contractor shall prevent all ground water and surface water from entering the existing sewer system during construction of a new sewer or force main extension.

R. Sanitary sewer designs that require crossing a county legal drain shall be approved and constructed per the latest standards of the Hamilton County Surveyor's Office.

3.5 PIPE BEDDING AND HAUNCHING

A. Each pipe section shall be laid in a firm foundation of bedding material and haunched and backfilled with care.

B. Prior to pipe installation, carefully bring bedding material to grade along the entire length of pipe to be installed. To provide adequate support for the pipe, the following bedding procedures are recommended.

1. When Class I material is used for bedding, little or no compaction is necessary due to the nature of the angular particles. A depth of 4 to 6 inches is generally sufficient to provide uniform bedding.

C. Bedding material shall have a minimum thickness beneath the pipe of 4 inches (100 mm) or one–eighth of the outside diameter of the pipe, whichever is greater, and shall extend up the sides of the pipe one–sixth of the outside diameter of the pipe.

D. For rigid pipe, such as concrete or ductile iron, backfill between the bedding material and a plane 12 inches (300 mm) over the top of the pipe shall be hand–placed finely divided earth, free from debris and stones, or granular backfill if required.

E. For flexible pipe such as PVC, the placement of embedment material, consisting of bedding, haunching, and initial backfill, must be done with care. The ability of the pipe to withstand loading in a trench depends a large part on the method employed in its installation. Class I material, as defined in specification Section 02222, Article 2.01, paragraph A, shall be used as embedment material for flexible pipe. Bedding thickness shall be as specified in paragraph C of this Section. The haunching material (the material from the bedding to the pipe springline) and initial backfill (the material from the pipe springline to a plane 12–inches over the top of pipe), shall be hand placed. Care must be taken to not cause damage by compacting the material directly over the pipe.

F. In yielding subsoils, the trench bottom shall be undercut to the depth necessary and backfilled with graded, crushed stone to form a firm foundation. No additional payment shall be made for stabilizing yielding subsoils.

G. Where excavation occurs in rock or hard shale, the trench bottom shall be undercut and a minimum of 6 inches (150 mm) crushed stone bedding placed prior to pipe installation. Additional payment for rock excavation shall be made on "unit cost" projects only, and as prescribed under basis for payment.

3.6 MANHOLES AND OTHER STRUCTURES

A. Manholes and other structures are to be constructed at locations shown on the drawings and in accordance with the following specifications:

1. Precast concrete manhole sections shall conform to ASTM Designation C478, except as modified herein:

a. The joint design of the precast sections shall consist of a bell or groove on one end of the unit of pipe and a spigot or tongue on the adjacent end of the joining section.

b. The joint shall consist of a round rubber gasket confined in a groove in the spigot end of the precast manhole section and shall conform to Sections 6.1.6, 6.1.7 and 9 of ASTM Designation C443, latest revision and a 6 inch wide flexible butyl rubber joint sealant between the outside joints. Inside manhole joints are to be sealed with hydroplug or nonshrink grout and brushed smooth.

2. Openings in manhole sections for sewer connections shall be coredrilled at the point of manufacture and shall be done to produce a smooth, uniform, cylindrical hole of proper size to accommodate a resilient connector meeting requirements of ASTM C 923. The resilient connectors shall be either Press–Seal Gasket Corp., PSX Gasket or Press–Wedge II; or similar flexible manhole sleeves furnished by Kor–N–Seal by NPC Systems, Inc.; or equal.

3. Manhole bases shall be cast–in–place concrete, reinforced as shown on the Standard Detail Sheet, or monolithic base and first section combination. Manhole bases shall be cast or placed on a minimum of 6 inches of compacted crushed stone.

4. Manhole channels or inverts shall be preformed and poured with Class "B" concrete to the spring line of the connecting pipe. The finished invert shall be a semi–circular shaped smooth channel directing the flow to the downstream sewer.

5. Monolithic concrete manholes, junction chambers, and other castin–place concrete structures shall be cured for a minimum of seven days. The exterior surfaces shall then be coated thoroughly with a coal tar epoxy type coating as manufactured by TNEMEC Co., Tneme–46H413 Hi–Build Tneme–Tar; or approved equal by the Westfield Public Works Department. Coating shall be 12 mil minimum dry film thickness. Each joint of precast concrete manhole sections, lifting holes, and holes left by the removal of cores shall be fully mortared and shall be coated with a 12 mil minimum dry film thickness of coal tar epoxy as specified upon reaching its final set.

6. Any additional holes cut in the field shall be drilled with a coredrill or in a manner approved by the Westfield Public Works Department or designee.

7. Manhole frames and lids shall weigh not less than 335 pounds and be of good quality cast iron, conforming to ADTM Designation A48. Unless specifically designated otherwise, manhole castings shall be the non–locking type. All manhole frames shall be cast or drilled with be cast or drilled with three holes equally spaced around base of frame and shall be securely anchored to cone section with three 3/8–inch stainless steel bolts, nuts, and washers. The joint between the casting frame and cone section shall be first sealed with cement mortar and then coated with a pliable butyl rubber or a coal tar epoxy coating upon reaching its final set to become a watertight joint.

8. Manhole steps shall be made form a steel reinforcing rod encapsulated in a copolymer polypropylene resin. Steps shall be placed as shown on the approved drawings.

3.7 HOUSE/BUILDING SERVICES

A. The Contractor shall install 6–inch diameter house/building service sewer shall be installed as shown on the Standard Detail Sheet. The house/building service shall extend from a "wye" or "tee" fitting in the main sewer line to the property line or easement line, unless stated otherwise.

B. The backwater prevention valve shall be located on the inside of basements or crawl spaces and readily accessible at all times. The backwater prevention valve for buildings located on slabs shall be installed on the building side of the clean out.

C. The Contractor shall contact the individual property owners for the preferred location of the house/building service to best suit the property owner's needs. If the Contractor is unable to contact the property owner in advance of laying the main sewer by or across the property, the Contractor shall so notify the Westfield Public Works Department or designee in writing.

D. Fittings for house/building service connections on a main line sewer 15 inches in diameter or smaller shall be tees or 45–degree wyes and shall be of the same material as the main line sewer, unless otherwise approved by the Westfield Public Works Department.

E. House/building services and connections on main line sewers greater than 15 inches in diameter shall be of a type that will maintain the structural integrity of the main line sewer and provide a watertight connection. Intrusion of house/building services into the flow way of the main line sewer should not be permitted.

F. Six–inch lateral pipe shall connect to the main line sewer at an angle of 15 degrees to 45 degrees from the spring line and shall include the necessary bends and straight pipe sections to reach the property line at the elevations specified. A pipe stopper or a bell cap shall be placed on/in the last bell. This stopper or bell cap should be compatible with the type of infiltration/exfiltration test performed on the sewer.

G. The Contractor shall furnish and use the proper fittings, couplings, and adapters suited to make the transition between different pipe materials which will maintain the structural integrity and the watertightness of the entire sewer system.

H. At the discretion of the Westfield Public Works Department, when and where improper installation practices are suspected, or questionable bedding materials and methods are employed, or where the installations are severe, the Contractor will have to perform deflection testing on the 6–inch house laterals as specified in Article 3.9.

I. Backfill around fittings and lateral pipe shall be carefully placed and compacted to prevent damage from backfill settlement and shall be installed in same manner as described for sewer installation.

J. The Contractor shall keep accurate horizontal and vertical location measurements of each house/building service installed. The location of all house/building services shall be shown on record drawings as noted in Section 1.17 Record Drawings. The accuracy of the measurements shall be the Contractor's responsibility.

3.8 STUBS, CONNECTIONS, BULKHEADS, AND MISCELLANEOUS ITEMS OF WORK

A. Where special junction chambers are to be constructed or where existing sewers carrying sanitary sewage are encountered, the Contractor shall provide and maintain temporary connections to prevent a nuisance.

B. Where called for shop connections and stubs for future sewer connections shall be provided.

C. New sewer connections to existing manholes shall be neatly made by cutting a hole in the existing structure, concreting the sewer in place, and providing a watertight connection.

D. The Contractor shall not connect any existing sewers or house/building services prior to the completion of the exfiltration/infiltration tests, air tests, and acceptance of the sewer without the permission of the Westfield Public Works Department.

3.9 VERTICAL DEFLECTION TESTING

For PVC pipe, the entire length of installed mainline pipe shall be tested for acceptance with an approved go–no–go mandrel under the observation of the Engineer. The testing shall be conducted after the final backfill has been in place for at least 30 days. No pipe shall exceed a deflection of 5%. The deflection test shall be run using a mandrel having a diameter equal to 95% of the inside diameter of the pipe in accordance with ASTM D–3034 Appendixes. The pipe shall be measured in compliance with ASTM D–2122. All pipe exceeding the allowable deflection shall be replaced, repaired, and retested.

3.10 INFILTRATION LIMITS

A. Maximum infiltration/exfiltration limits for all new sanitary sewers shall not exceed 200 gallons per inch of diameter per mile of pipe per 24 hours for any section of the system. All sections of the sewer shall be tested, and any sections not meeting this infiltration standard shall be repaired and retested.

B. The Contractor shall note the special provision under Article 3.04, paragraph O., that the first section of sewer of each size and type of sewer shall be given a satisfactory leakage test before proceeding with any additional construction.

3.11 SEWER WATERTIGHTNESS TESTING

A. Tests for watertightness shall be conducted on all installed sewers in the presence of and in the manner accepted by the Westfield Public Works Department or designee. The Contractor shall furnish and install all equipment necessary for the sewer tests.

B. Watertightness tests shall be conducted on short sections of the sewer as soon as the manholes have been constructed and the backfilling completed.

C. Where the section tested is in excess of the allowable limits, the Contractor shall correct the construction of the sewer so that the section tested is within the allowable limit. All methods and materials used in the repair shall be approved by the Westfield Public Works Department or designee.

D. The program of testing shall fit the conditions as determined by the Westfield Public Works Department or designee using Air Test for Leakage. When ductile iron pipe with push–on type joints are used for sewer construction, a hydrostatic pressure test shall be performed.

1. The Air Test for Leakage

a. The air test for leakage shall be used to test sewer watertightness on all sewer pipe unless otherwise noted.

b. The ends of the sewer section being tested shall be sealed and properly blocked. The seal at one end shall have an orifice through which to pass air into the pipe. An air supply shall be connected to the orifice at one end of the section. The air supply line will contain an off–on gas valve and a pressure gauge having a range from 0 to 25 psi. The gauge shall have minimum divisions of 0.10 psi and shall have an accuracy of the nearest ±0.1 psi. The seals at each manhole shall be properly blocked to prevent displacement while the line is under pressure.

2. Procedure for Conducting a Low Pressure Air Test

a. Clean pipe to be tested by propelling a snug fitting inflated ball through the pipe by water pressure or other adequate method. This step is important because it not only flushes out construction debris, but the water used to flush the ball through the pipe dampens the pipe wall. The rate of air loss through pipe wall permeation can be significant on dry pipes.

b. Plug all pipe outlets with pneumatic plugs having a sealing length equal to or greater than the diameter of the pipe to be tested. The pneumatic plug shall be able to resist internal testing pressures without requiring external bracing.

c. The groundwater level surrounding the section of sewer under testing shall be determined by one of the procedures previously outlined in paragraph D(1). If the groundwater table is above the pipe, then test pressures shall be increased by the corresponding increment (e.g., if the groundwater table is above the lowest crown of the pipe, the air pressure should be increased 0.43 times each foot of water.)

d. Once the pipe outlet plugs are securely in place, pressurized air is introduced to the system. The air shall be fed through a single control panel with three individual hose connections as follows:

(1) from control panel to pneumatic plugs for inflation in sewer pipe;
(2) from control panel to sealed line for introducing the pressurized air;
(3) from sealed line to control panel. This line will enable continuous monitoring of the air pressure rise in the sealed line.

e. The air shall be introduced slowly to the section of pipe under evaluation until the internal air pressure is raised to 4.0 psig greater than the hydrostatic pressure head created by the existence of groundwater that is over the pipe section.

f. A minimum of two minutes shall be provided for the air pressure to stabilize to conditions within the pipe. (This stabilization period is necessary for variations in temperature to adjust to the interior pipe conditions.) Air may be added slowly to maintain a pressure to 3.5 to 4.0 psig for at least two minutes.

g. After the stabilization period, when the pressure reaches exactly 3.5 psig, the stopwatch shall be started; and when the pressure reaches 2.5 psig, it is stopped. The portion of the line being tested shall be acceptable if the time in minutes for the air pressure to decrease from 3.5 psig to 2.5 psig is greater than the time shown in the following table:

Pipe Diameter (Inches)	Time (Minutes)
4	2.0
6	3.0
8	4.0
10	5.0
12	5.5
15	7.5
18	8.5
21	10.0
24	11.5

h. In areas where the groundwater is above the top of the pipe, the test pressures shall be increased by 0.433 per foot of groundwater (e.g., if the groundwater is 11–1/2 feet, the 3.5 to 2.5 pressure drop will be increased by 5 psi; the time then will be measured for a pressure drop from 8.5 psi to 7.5 psi.)

3. Safety Precautions During Air Test

a. The air test may be dangerous if, because of ignorance or carelessness, a line is improperly prepared. It is extremely important that the various plugs be installed and braced in such a way as to prevent blowouts. Inasmuch as a force of 250 pounds is exerted on an 8–inch plug by an internal pipe pressure of 5 psi, it should be realized that sudden expulsion of a poorly installed plug or of a plug that is partially deflated before the pipe pressure is released can be dangerous.

b. As a safety precaution, pressurizing equipment should include a regulator set at perhaps 10 psi to avoid overpressurizing and damaging an otherwise acceptable line. No one shall be allowed in the manholes during testing.

3.12 HYDROSTATIC TESTING

A. A hydrostatic test on ductile iron pipe with push–on type joints has two purposes: one is to set the gaskets in place, and the other is to provide a leakage test.

B. Said test shall include all ductile iron sewer pipe with push–on type joints installed by the Contractor. The Contractor shall make arrangements with the Westfield Public Works Department or designee for scheduling the test after the sewer pipe has been accepted as being ready for testing. The test shall be performed in the presence of the Westfield Public Works Department or designee on the day mutually agreed upon.

C. Water for testing may be obtained from the Westfield Public Works Department or designee. The cost of the water supplied for such testing is to be paid by the Developer. The Contractor shall furnish all necessary equipment, piping, pumps, fittings, gauges, and operating personnel to properly conduct the test.

D. Hydrostatic test on ductile iron pipe with push–on type joints installed as gravity sewers and siphons shall be in accordance with the following provisions:

1. The ends of the sewer section being tested shall have test plugs or caps adapted with a tap of adequate diameter to fill and pressurize the system with water.

2. When a section is terminated at a manhole with a plain end (spigot), the pipe must extend into the manhole of sufficient length to accommodate a restraining cap. The benchwall shall be formed in the manhole after the test section has been approved.

3. Water shall be introduced into the section to be tested at the lower end. The upper end shall have an orifice at the top of the plug or cap to expel air when filling the system with water. All air shall be expelled from the pipe.

4. The test plugs or caps shall be capable of withstanding an internal pressure of 175 psi.

5. The system shall be tested in conformance with Section 13 of AWWA Specifications 600, at 50 pounds per square inch over a period of not less than one hour. The system will not be acceptable until all leaks have been repaired.

6. Hydrostatic test may be dangerous if, because of ignorance or carelessness, a line is improperly prepared. It is extremely important that the various plugs be installed in such a way as to prevent blowouts. Inasmuch as a force of 2500 pounds is exerted on an 8–inch plug by an internal pipe pressure of 50 psi, it should be realized that sudden expulsion of a poorly installed plug or cap can be dangerous. As a safety precaution, no one shall be allowed in the manholes when the pipe is pressurized.

E. A hydrostatic test on ductile iron pipe with push–on type joints installed as force main shall be in accordance with Article 3.12, paragraph D., with the following exception:

1. The force main shall be subjected to an internal pressure equal to 50% more than the maximum operating pressure, but in no case less than 50 psig or greater than 120 psig.

3.13 MANHOLE VACUUM TESTING

A. A vacuum test shall be conducted by the Contractor on all manholes to ensure watertightness and manhole integrity.

B. The equipment required to conduct a vacuum test on manholes includes inflatable pipe plugs, test head, vacuum pump, flexible air hose, and a vacuum gage. The test equipment shall be capable of drawing a vacuum of 10–inch Hg. The equipment shall be designed specifically for the purpose of testing manholes and shall be as manufactured by P.A. Glazier,shal Inc., Worchester, Massachusetts 10002, or equal.

C. The procedure for conducting an air test on manholes shall be in accordance with the following procedure:

1. Each manhole shall be tested immediately after assembly and prior to setting the casting or backfilling around the structure.

2. All lift holes shall be plugged with non–shrink grout.

3. All pipes entering the manhole shall be securely plugged and adequately braced against the inside of the manhole to prevent being drawn out of the pipe.

4. The test head shall be placed on the inside of the cone section and sealed with an inflatable seal.

5. A vacuum of 10 inches of mercury (Hg) shall be drawn and the vacuum pump shut off. With the valves closed, the time shall be measured for the vacuum to drop to 9 inches. The manhole shall pass if the time is greater than the following:

Manhole Size	Minimum Test Time
48"	60 seconds
60"	75 seconds
72"	90 seconds

3.14 CLOSED CIRCUIT TELEVISION INSPECTION

A. All sections of sewers shall be inspected by closed circuit television.

B. All unacceptable conditions found during television inspection must be corrected by the Contractor and re–televised.

C. Unacceptable conditions are conditions that adversely affect the ability of the system to function as designed or to be properly maintained and may include, but are not limited to, the following:

1. Protruding taps
2. Cracked or faulty pipe
3. Misaligned or deformed pipe
4. Debris in line
5. Infiltration / exfiltration
6. Excessive gaps at joints
7. Bellies or sags with a depth greater than or equal to 10% (or a maximum of 1–1/2 inches) of pipe diameter and/or a length greater than 25 feet.

D. See Specification Section 02750 Sewer Televising for procedures.

3.15 RECORD DRAWINGS

A. The Contractor shall prepare or be responsible for the preparation and submittal of record drawings as described in Section 01001, Article 1.17.

B. Record drawings shall be certified to accuracy by a registered professional Engineer.

PART 4 – FIGURES

4.1 STANDARD DETAILS

Figure	Description
S–1	Standard Sanitary Manhole Detail
S–2	Standard Sanitary Manhole Spacer Ring Detail
S–3	Standard Sanitary Manhole Frame and Cover Details
S–4	Force Main Discharge Detail
S–5	Sewer Pipe Bedding Details
S–6	Concrete Encasement Detail
S–7	Drop Pipe Details
S–8	Alternate Drop Pipe Details
S–9	Jacking and Boring Detail
S–10	House/Building Service Detail–1
S–11	House/Building Service Connection Detail–2
S–12	House/Building Service Bedding Detail
S–13	House/Building Service Clean–out Detail
S–14	Grease Trap Detail

END OF SECTION 02731
WESTFIELD STANDARD – 2003

811
Know what's below. Call before you dig.
Within Indiana Call
811 or 800–382–5544
24 Hours a Day, 7 Days a Week.
PER INDIANA STATE LAW IC 8–1–26. IT IS AGAINST THE LAW TO EXCAVATE WITHOUT NOTIFYING THE UNDERGROUND LOCATION SERVICE TWO (2) WORKING DAYS BEFORE COMMENCING WORK.

WEIHE ENGINEERS
Land Surveying | Civil Engineering
Landscape Architecture
10505 N. College Avenue
Indianapolis, Indiana 46280
weihe.net
317 | 846 - 6611
800 | 452 - 6408
317 | 843 - 0546 fax
ALLAN H. WEIHE, P.E., L.S. - FOUNDER

PROJECT NO.: W12.0262
DWG NAME: 120262-C301 spec.dwg
DESIGNED BY: EAC/MG
DRAWN BY: EAC/MG
CHECKED BY: JKS
DATE: 06.29.2012

REVISIONS AND ISSUES	DATE	BY
50% CD SET	07/26/12	EAC/MG
REVISIONS PER WESTFIELD REVIEW	8/23/12	EAC

JAMES K. SHINNEMAN REGISTERED NO. 10200392 STATE OF INDIANA PROFESSIONAL ENGINEER
APPROVAL PENDING NOT FOR CONSTRUCTION
JAMES K. SHINNEMAN P.E. 10200392

PREPARED FOR:
EPIPHANY EVANGELICAL LUTHERAN CHURCH PHASE ONE
156TH AND DITCH ROAD, WESTFIELD IN
SANITARY SEWER SPECIFICATIONS
Part of the SE Corner of SW/1/4 of Section 10, Township 18 North, Range 3 East, Washington Township, Hamilton County, Indiana

SHEET NO. C301C
PROJECT NO. W12.0262

LOCATION: H:\2012\w120262\Engineering\design\conset\120262-C301 spec.dwg
LAYOUT: C301 – C SANITARY SEWER
DATE/TIME: August 24, 2012 – 12:08pm
PLOTTED BY: cartere

WESTFIELD STANDARD – 2006
SECTION 02500 – PAVING AND SURFACING

PART 1 – GENERAL

1.1 DESCRIPTION

A. Scope: This section covers all work involved in the installation of new pavement, walks, and curbs, and the repair and replacement of existing streets, roads, highways, drives, parking areas, curbs, gutters, sidewalks, and other paved areas damaged or destroyed during construction.

B. Related Work Specified in the following Section

1. Section 02222 Earthwork for Utilities Subgrade Preparation

C. Codes, specifications, and standards referred to by number or title shall form a part of this specification to the extent required by the reference thereto. Except as specifically modified in this specification, paving and surfacing operations, materials and testing will comply with the most current revisions of applicable sections per the latest version of the Indiana Department of Transportation Standard Specifications.

D. Definitions

1. Abbreviations

a. INDOTSS Indiana Department of Transportation's Standard Specifications.
b. AASHTO American Association of State Highway & Transportation Officials.
c. ACI American Concrete Institute.
d. ASTM American Society for Testing & Materials.
e. NRMCA National Ready Mix Concrete Association.

2. Rock: A natural aggregate of mineral particles connected by strong and permanent cohesive forces. Rock includes limestone, sandstone, dolomite, granite, marble, and lava.

3. Subgrade: The prepared and compacted soil immediately below the pavement or walk system and extending to such depth as will affect the structural design.

4. Subbase: The layer of specified or selected material of designed thickness placed on a subgrade to support a base course and surface course.

5. Base Course: The layer of specified or selected material of designed thickness placed on a subbase to support a binder or surface course.

6. Binder Course: The layer of specified or selected material of designed thickness placed on a base course to support a surface course.

7. Surface Course: The layer of specified or selected material of designed thickness placed on a subbase or base course to support the traffic load.

1.2 QUALITY ASSURANCE

A. The Developer/Contractor shall employ, at the request of the Westfield Public Works Department or designee, and pay for the services of an independent testing laboratory (unless otherwise noted) to perform specific services and necessary field density tests. The Developer/Contractor shall demonstrate to the Town of Westfield Public Works Department or designee that proper compaction has been obtained and proper asphalt and concrete mix designs are in compliance with the specifications.

B. Mixing Plant: Prior to placing any hot asphalt concrete pavement or Portland cement concrete pavement, the Contractor shall provide the Westfield Public Works Department or designee the name and location of the bituminous mixing or concrete mixing plant and the type and composition of mixes the Contractor proposes to use in the work.

C. Paving and surfacing shall comply with the tolerances specified in Sections 401.15 (Bituminous), 501.15, 501.16 and 501.23 of INDOTSS.

1. Subgrade and subbase shall be within 1/2 inch of dimensions indicated on drawings.

2. Bituminous base shall not vary longitudinally more than 1/4 inch from a 10–foot straightedge. Bituminous and concrete surfaces shall not vary more than 1/8 inch from a 10–foot straightedge.

3. Finished surface shall be within 1/4 inch of dimensions indicated on drawings.

D. Asphalt and concrete pavement shall be installed by a contractor whose prime business is asphalt or concrete paving.

1.3 JOB CONDITIONS

A. Do not place paving and surfacing materials on a wet surface, pumping subbase or when weather conditions would prevent the proper construction of paving and surfacing.

B. Do not place aggregates on frozen subgrade. Do not place aggregates when air temperature is below 35°F.

C. Bituminous materials are to be placed in accordance with INDOTSS 402, 405.04, and 406.05.

D. When air temperatures are at or below 35 degrees F, an admixture is required to be added to the concrete to prevent freezing.

E. Do not place paving and surfacing materials when natural light is not sufficient to properly observe work or operations.

1.4 GRADE ADJUSTMENT OF EXISTING STRUCTURES

A. When grade adjustment of existing structures is required, the manhole frames, covers and gratings, and the gas and water valve boxes and covers, shall be removed and reconstructed to grade as required.

B. On resurfacing work, the castings and boxes shall be adjusted to grade after the last binder course has been laid and before placing the surface course.

C. All castings, frames and valve boxes adjusted to grade shall be done in advance of the final paving and shall be paid for by the Contractor as part of the project, unless specifically identified as an item for payment in unit price contracts.

1.5 CONTRACTOR'S ORGANIZATION

A. The Contractor shall be a firm who's prime business is asphalt or concrete paving. The Contractor shall have a competent supervisor on the site during the progress of the work, acting for the Contractor in all matters concerning the work. He shall have the authority to receive directions and act upon them for the Town through the Westfield Public Works Department or designee.

B. The Contractor shall keep a set of Plans and Specifications available on the site and in good condition.

1.7 TRAFFIC CONTROL

The Contractor shall plan construction operations so that existing local traffic access can be maintained. During the construction, he will also maintain appropriate use of barricades, lights, flagmen and other protective devices, whether specified for the project or required by the local governing authority. Traffic control devices used for maintenance of traffic shall comply with the Indiana Manual on Uniform Traffic Control Devices.

PART 2 – PRODUCTS

2.1 AGGREGATE

A. Fine aggregates shall consist of natural sand or manufactured sand produced by crushing rock, shells, air–cooled blast furnace slag, or wetbottom boiler slag.

1. Fine aggregates used in Portland cement concrete and bituminous pavements shall be free from injurious amounts of organic impurities. When subjected to the colorimetric test for organic impurities and a color darker than the standard is produced, it shall be tested for effect of organic impurities on strength of mortar in accordance with AASHTO T 71. If the relative strength at 7 and 28 days, calculated in accordance with section 10 of T 71, is less than 95%, it shall be rejected.

B. Coarse aggregates shall consist of clean, tough, durable fragments of crushed rock, crushed or uncrushed gravel or shells, or crushed and processed air–cooled blast furnace slag. These materials shall not contain more than 15% flat or elongated pieces and shall not contain particles with an adherent coating. Flat or elongated pieces will be described as pieces having a length in excess of four times its width.

C. Coarse aggregates shall comply with INDOTSS, Section 904.03. Fine aggregates shall comply with INDOTSS, Section 904.02.

2.2 BITUMINOUS MATERIALS

A. Petroleum asphalt cement shall be homogeneous, free from water, and shall not foam when heated to 347°F.

1. Petroleum asphalt cement shall be PG Binder, grade PG 64–22.
2. Petroleum asphalt emulsion shall be AE–60.

B. Bituminous materials for prime coat shall consist of:

1. Cut–back asphalt – MC–70; or
2. Asphalt emulsion – AE–P.
3. Materials shall conform to INDOTSS Sections 902.03 and 902.01.

C. Bituminous materials for tack coat shall consist of:

1. Asphalt emulsion – AE–T.
2. Materials shall conform to INDOTSS 902.04.

D. Bituminous materials for seal coat shall consist of:

1. Asphalt emulsion – RS–2, AE–90, AE–150, HFRS–2.
2. Materials shall conform to INDOTSS Sections 902.01.

E. Cover aggregate shall consist of:

1. Coarse aggregates, Class A or B, size no. 8, 9, 11 or 12.
2. Fine aggregate (natural sand only), size no. 23 or 24.
3. Materials shall conform to INDOTSS Sections 904.01 and 904.03, respectively.

2.3 HOT MIX ASPHALT (HMA)

A. Hot mix asphalt (HMA) shall consist of an intimate mixture of coarse aggregate, fine aggregate (including mineral filler if required), and asphalt cement or emulsion combined in proportions specified in INDOTSS Section 402.04.

B. When the use of one type or source of aggregate or binder is started, the use of that same type or source shall be continued for the entire lift being constructed, unless otherwise directed by the Engineer.

C. The use of recycled materials, RAP or ARS, shall not be permitted unless otherwise directed and approved by Engineer.

D. Preparation of HMA mixtures shall comply with the requirements of INDOTSS Section 402.07.

2.4 PORTLAND CEMENT CONCRETE

A. Cement shall be Portland cement and shall meet the requirements of ASTM Specification C 150, ACI 301, and ACI 318. Cement shall be Type 1 for normal use, Type 1A where air entrainment is desired, or Type III or Type IIIA where high early strength is desired and authorized by the Engineer. Blended hydraulic cements which meet the requirements of ASTM Specification C 595 Type 1P Portland pozzolan cement may be used where a more watertight concrete is required. Fly ash may also be used as a partial cement replacement for Types 1 or 1A. Cement shall meet requirements specified in INDOTSS Section 901.

B. Regular fine and coarse aggregates shall meet the requirements of ASTM Specification C 33. Aggregate shall be crushed limestone with a maximum size of 3/4 inch, except in mass concrete the maximum size may be 11/2 inches.

1. Lightweight fine and coarse aggregates shall meet the requirements of ASTM Specification C 330.

2. Insulating fine and coarse aggregates shall meet the requirements of ASTM Specification C 332.

C. Water shall be potable, clean, and free from injurious amounts of oils, acids, alkalis, organic materials, or other substances that may be deleterious to concrete or steel. A maximum of 500 mg/L of chloride ion may be present in the water.

D. Air entraining admixtures shall meet the requirements of ASTM Specification C 260.

1. Water reducing and retarding admixtures shall meet the requirements of ASTM C494, Type A or Type D; however, they shall contain no chlorides, be nontoxic after 30 days and compatible with the air entraining admixtures. The amount of admixture added to the concrete shall be in accordance with the manufacturer's requirements. Furnish a compliance statement that the admixture used satisfies all requirements of this specification. Evidence that the admixture is included in the approved list of the INDOTSS Division of Materials and Tests, in accordance with INDOTSS Section 912.03, will satisfy the requirement for a compliance statement.

2. Fly ash shall meet the chemical and physical requirements of ASTM C 618 for mineral admixture Class F, except loss on ignition shall not exceed 6%. Fly ash shall be sampled and tested in accordance with ASTM C 311 prior to use.

E. Reinforcing steel shall meet the requirements of ASTM Specification A 615, Grade 60.

1. Welded wire fabric or wire mesh shall meet the requirements of ASTM A 185.
2. Reinforcing steel and appurtenances shall follow INDOTSS Section 910.01.

F. Preformed expansion joint filler shall meet the requirements of ASTM Specification D 1752, Type III.

1. Hot–poured elastic joint filler shall meet the requirements of ASTM Specification D 1190.
2. Waterproof expansion joint filler shall meet the requirements of ASTM Specification D 1850.
3. Joint materials specified in INDOTSS Section 906 may be used, approved by the Engineer.

G. Concrete pavement shall be wet cured by using burlap, waterproof blankets, or ponding; or by using a membrane compound. If the membrane method is used, the compound shall be Type 2, complying with AASHTO M148 for white pigmented compound. A pressure sprayer capable of applying a continuous uniform film to the pavement surfaces will be required.

H. Dowel bars shall be smooth, round bars of plain billetsteel conforming to ASTM A615, Grade 40, and free of any deformation or foreign material that would restrict slippage in concrete. Dowel bars shall be coated as required by INDOTSS. For expansion joints, each bar shall be provided with a metal cap, or approved plastic cap, on one end that will provide for ample movement of the slabs.

1. Dowel bars and assemblies shall conform to the requirements of INDOTSS Section 501.14 (f).

I. Concrete base shall meet the requirements of INDOTSS Section 307.

J. Reinforced concrete pavement shall meet the requirements of INDOTSS Section 501.

K. Reinforced concrete for sidewalks and steps shall meet the requirements of INDOTSS Section 604.

L. Reinforced concrete for curbing shall meet the requirements of INDOTSS Section 605.

2.5 UNDERDRAINS

Underdrain material shall be 6–inch polyethylene perforated pipe.

PART 3 – EXECUTION

3.1 GENERAL

A. The Contractor is responsible to provide equipment, workmanship and materials required to achieve a finished product that meets these specifications.

B. Use compaction equipment suitable to the material being placed. Compacting equipment shall include at least one piece of equipment capable of providing a smooth even surface on the pavement surface course.

C. Prior to placing paving and surfacing materials, shape subgrade as required to produce finished pavement grades and cross–sections shown on drawings.

D. Do not place paving and surfacing material before subgrade is reviewed (proof roll) and accepted by the Westfield Public Works Department or designee. Do not place paving and surfacing materials on a frozen or muddy subgrade.

E. Compact subgrade to not less than 100% of its maximum density as determined in accordance with AASHTO T99.

F. Provide adequate drainage at all times to prevent water from standing on subgrade, pavement or walks.

3.2 SUBGRADE

The subgrade material and testing shall comply with INDOTSS Section 207, before placement of subbase.

3.3 SUBBASE PREPARATION

Provide 8 inches of subbase in locations where pavement is to be placed on a material other than Special Backfill. Subbase shall meet the requirements of INDOTSS Section 302.

3.4 AGGREGATE BASE, SURFACE, OR SHOULDERS

A. Aggregate base, surface, or shoulders shall consist of crushed rock or gravel. The aggregate type shall be suitable for the area in which the project is located. The aggregate thickness shall be as shown on the drawings and as specified herein.

B. Aggregate shall be Type "A" mix, unless otherwise specified by the Westfield Public Works Department or designee.

C. Compacted aggregate materials and construction shall conform to INDOTSS Section 303.
D. If the required thickness of the aggregate (Type O) exceeds 4 inches, the material shall be placed and compacted in separate lifts no less than 2 inches nor more than 4 inches of compacted depth. If Type P aggregate is used, it may be placed in individual lifts with a thickness of up to 6 inches.

E. If spreading devices are used which will ensure proper depth and alignment, forms will not be required; otherwise, forms shall be required. Forms shall be of wood or steel, adequate in depth, straight, of uniform dimensions and equipped with positive means for holding the form ends rigidly together and in line. Segregation of material shall be avoided by any spreading method used. No payment will be made for aggregate placed beyond the dimensions shown on the drawings.

F. Compact material in each lift after material is spread and shaped. Compact material to not less than 100% of maximum dry density as determined by AASHTO T99. Use construction procedures, including sufficient wetting and number of passes, to ensure specified density is attained.

G. The Contractor shall employ an independent testing laboratory to perform field density tests to demonstrate proper compaction of aggregate surface pavement, if requested by the Westfield Public Works Department or designee.

H. In a brick surfaced street, unless specifically excepted and pending the structural adequacy of any remaining brick, the Contractor may remove all brick and enough base material to allow full width repaving using either a bituminous or concrete pavement; or of providing a HMA base and HMA intermediate for the full depth of the brick across the trench and then replace the entire street with 1 inch of HAC surface.

I. Unless otherwise shown on the drawings, the minimum section (excluding subgrade) of reinforced concrete shall be 6 inches of compacted #53, Type "A" aggregate base and 6 inches of 4,000 psi reinforced concrete.

J. Unless otherwise shown on the drawings, for a street with a brick base and an asphalt surface, the replacement section shall be full depth asphalt from the bottom of the brick base to the top of the asphalt surface. The top 1 inch shall be #11 HMA surface.

K. Unless otherwise shown on the drawings, for a street with a concrete base and an asphalt surface, the replacement section shall be a new concrete base, not less than 6 inches thick with #5 HMA base to within 1 inch of the existing grade and then 1 inch of #11 HMA surface.

L. Unless otherwise shown on the drawings, chip and seal pavements shall have 8 inches of compacted aggregate base (#53, Type "O" crushed stone) and 1 inch processed bituminous coated aggregate pavement placed and rolled.

M. Unless otherwise shown on the drawings, gravel pavement shall be replaced with 6 inches of #53, Type "A" compacted stone or gravel aggregate.

3.5 HOT MIX ASPHALT

A. This work shall consist of constructing one or more courses of HMA base, intermediate, and wedge leveling or surface mixtures on a prepared foundation in accordance with these specifications and in reasonably close conformance with the lines, grades, thicknesses, and typical cross sections shown on the plans or established by the Engineer.

1. If the required finished depth of any course is to exceed three times the top size of the aggregate used as shown by actual screen analysis, the course shall be constructed in two or more lifts, as directed.

2. Mix type shall be as indicated on the drawings, without exception, unless otherwise approved in writing by the Engineer.

a. Job mix formulas shall be prepared and submitted for approval in accordance with INDOTSS 402. The job mix formula shall include standard bituminous mixture information including, but not limited to, aggregate gradation, binder content, maximum specific gravity, and air voids.

3. Materials and construction requirements shall comply with the requirements of INDOTSS Section 402.

B. If the previously constructed course is granular, a prime coat will be required.

1. Apply prime coat uniformly at a rate of 0.25 to 0.80 gallon per square yard depending on condition of surface and amount of loose aggregate.

2. Apply prime coat with a pressure distributor. Temperature of prime coat shall not exceed 150°F.

3. Squeegee excess prime coat from the subbase surface. Correct deficient or skipped area.

4. Prime coat shall be placed in accordance with INDOTSS Section 405.07.

C. Place and spread bituminous base mixture with a bituminous paver. In areas inaccessible to a paving machine, place and spread bituminous base mixture by other acceptable mechanical or hand methods.

D. Tack coat shall be placed on existing bituminous or concrete surfaces before a new lift of bituminous material is added. Apply tack coat uniformly at a rate of 0.06 gallon per square yard (0.000252 ton per square yard).

1. Patch and clean existing surface. The surface shall be free of irregularities and provide a reasonably smooth and uniform surface to receive the tack coat. Remove and replace unstable corrugated areas with suitable patching materials.

2. Tack coat shall be placed in accordance with INDOTSS Sections 406.03 through 406.05.

E. Placement and compaction of hot mix asphalt (HMA) shall conform to INDOTSS Sections 402.10 through 402.16.

F. Place binder used for wedging or leveling, approaches and feathering by mechanical methods or acceptable hand methods for placing and spreading in accordance with INDOTSS Section 400.

3.6 SEAL COAT AND COVERING AGGREGATE (CHIP AND SEAL)

A. Application shall be as follows

Seal Type	Cover Aggregate Size Number	Rate of Application Per Square Yard: Aggregate Pounds	Rate of Application Per Square Yard: Bituminous Material Gallons at 60°F
1–Single Application (only AE–90 or AE–150)	23, 24	12–15	0.12–0.16
2–Single Application	12	14–17	0.29–0.33
5–First Application	11	16–20	0.36–0.40
Second Application	12	16–19	0.33–0.37

B. Seal coat and covering aggregate shall be placed in accordance with INDOTSS Sections 404.04 through 404.08.

3.7 PORTLAND CEMENT CONCRETE PAVEMENT

A. Portland cement concrete pavement shall consist of a coarse aggregate base (if required) and a reinforced or unreinforced Portland cement concrete surface, as shown on the drawings

1. Use No. 53, Type "A" coarse aggregate for subbase, unless otherwise shown or specified.

2. Pavement cross–section shall be as shown on drawings.

B. Where an aggregate base course is shown or specified, it shall be constructed in accordance with Article 3.3 of this specification.

C. Portland cement concrete pavement operations and materials shall comply with INDOTSS Section 501 unless otherwise specified by the Engineer.

1. Alternate equipment to that specified in INDOTSS, Section 501 shall be allowed provided that line, grade, surface, smoothness and other requirements of the specifications are met. The equipment used shall be subject to the approval of a Professional Engineer licensed in the State of Indiana.

2. Expansion and contraction joints shall be installed as indicated on the drawings or as required by INDOT standards. Expansion joints shall be required whenever new concrete abuts fixed objects or existing concrete surfaces, whether or not shown on the drawings.

3. Keyway construction, load transfer devices, tie bars and slab and ear reinforcement shall be installed as indicated on the drawings.

4. Unless otherwise shown on the drawings, the final finish of concrete pavement shall be by brooming, as set out as Method 1 in INDOTSS Section 504.03, to form a transverse skid–resistant finish.

5. The Contractor shall always have materials available to protect the surface of concrete against rain. These materials shall consist of burlap, curing paper or plastic sheeting.

6. New concrete pavement shall be protected by the Contractor until opening to traffic is approved by a Professional Engineer licensed in the State of Indiana. It shall not be opened to traffic until the field–cured concrete has attained a flexural strength of 550 psi, or a compressive strength of 3,500 psi. If such tests are not conducted, the pavement shall not be opened to traffic until 14 days after the concrete was placed. Before opening to traffic, the pavement shall be cleaned and permanent lane markings applied to the pavement.

3.8 WALKS

A. Walks shall consist of a coarse aggregate subbase and a reinforced concrete surface. Use No. 24 fine aggregate for subbase, unless otherwise shown. Concrete shall be Class "A", 4,000 psi concrete.

B. Subbase shall be 2 inches thick, and concrete shall be 4 inches thick, unless crossing driveways, of which it will be 6" thick, as shown on detail P–10.

C. Compact subbase to not less than 95% of maximum dry density, as determined in accordance with AASHTO T99.

D. Proportion, mix, and place concrete as specified in INDOTSS Sections 604 and 702. Walks shall have a broom surface finish. Edge all outside edges of walk and all joints with a 1/4inch radius edging tool.

E. Unless otherwise shown on the drawings, walks shall be divided into sections not more than five feet in length by dummy joints formed by a jointing tool with a 1/4 inch radius.

F. Form construction joints around all abutting structures and appurtenances such as manhole, utility poles, hatches, and hydrants. Install 1/2 inch thick pre–molded expansion joint filler in construction joints. Expansion joint material shall extend for the full depth of the walk.

G. If existing sidewalk is to be removed and replaced with new sidewalk or new sidewalk extended from existing sidewalk, the existing sidewalk shall be removed to the nearest joint of suitable quality or as directed by the Westfield Public Works Department.

3.9 CURBS

A. The construction of curbs, combination curb and gutter, and integral curb and gutter shall be in accordance with these specifications and as shown on the plans and shall be in reasonably close conformance with the lines and grades shown on the plans or as directed by a Professional Engineer licensed in the State of Indiana.

B. Excavation for curbs shall be made to the required depth, and the subgrade or base upon which the curb is constructed shall be compacted to a firm, even surface to not less than 95% of maximum dry density as determined in accordance with AASHTO T99.

C. Concrete for curbs shall be Class A, 4,000 psi, as specified previously for Concrete Pavement.

D. The curbs shall be constructed by the use of wood or metal forms; or, if approved by a Professional Engineer licensed in the State of Indiana, the curb may be constructed using a curb slipform machine. Forms, if used, shall be straight, free from warped or bent sections, and shall extend for the entire depth of the curb and shall be securely held in place so that no deviation from alignment and grade will occur during placement of concrete. The concrete shall be consolidated by vibration or other acceptable methods. The top of the curb shall be floated smooth and the top outer corner rounded to a 1/4 inch radius.

E. The face, top, and gutter of curbs shall not have deviations or irregularities of more than 1/4 inch when checked with a 10 foot straightedge.

F. Construction joints shall be placed at 10 foot intervals, unless otherwise shown or directed by a Professional Engineer licensed in the State of Indiana. The joint shall be uniform, of 1/8 to 1/4 inch in width, and to a depth of approximately 2–1/2 inches. The joint may be formed using concrete tools, saw cut or formed by approved removable strips providing a straight joint at right angles to the length of curb. Joints shall be filled with specified bituminous joint filler material. Construction joints shall be formed around all abutting structures such as inlets and shall be as specified previously.

G. As soon as possible after placing and finishing of concrete, the curbing shall be moistened and kept moist for three days, or cured with the use of a specified membrane compound.

H. If existing curb is to be removed and replaced with new curb or new curb extended from existing curb, the existing curb shall be removed to the nearest joint.

I. During the placement of new concrete curb, utility marking shall be embossed into the top of the curb. The marking shall be a 2" high letter stamped into the concrete before the concrete sets up. The letters shall be located perpendicular from the utility feature that is being marked.

The letters shall be as follows:
G = Gas
C = Conduit
SS = Sewer Service Lateral
MH = Sanitary Manhole
W = Water
V = Water Valve
D = Subsurface Drainr by cons
S = Storm

3.10 LANE STRIPING

A. Lane striping is to be in accordance with all applicable standards of INDOTSS 808 and the construction plans.

B. Parking lots are to be striped with standard white road paint. Spaces to be striped shall be 10 feet 0 inches wide by 20 feet 0 inches long with 4 inch wide stripes.

C. Contractor will not permit traffic on any new pavement surface prior to striping.

D. Contractor will clean the new pavement surface to remove all dust, dirt, mud and debris prior to striping.

3.11 TESTING FOR HOT MIX ASPHALT (HMA)

A. At the discretion of the Westfield Public Works Department the Developer/Contractor shall employ and pay for the services of a competent independent testing laboratory to take cores at selected locations and perform described tests. Compaction requirements for HMA mixtures placed in accordance with INDOTSS Section 402 shall be controlled by in place density determined from cores cut from the compacted pavement. A minimum of two cores per section shall be cut for each course of each material or as directed by the Westfield Public Works Department. Sections are defined as a maximum of 1000 Mg (1041 ton) of HMA base or intermediate or 600 Mg (624 ton) of HMA surface. The transverse core location shall be located so that the edge of the core will be no closer than 75 mm (3 inches) from a confined edge or 150 mm (6 inches) from a non–confined edge of the course being placed.

B. For compaction of HMA mixtures with quantities less than 100 Mg (104 ton) per day, acceptance may be visual as determined by the Engineer.

C. The Contractor along with their independent testing lab representative shall obtain cores in the presence of the Westfield Public Works Department with a device that shall produce a uniform 150 mm (6 inches) in diameter pavement sample. Each HMA course shall be cored within one workday of placement. Damaged core(s) shall be discarded and replaced with a core from a nearby location as selected by the Engineer.

D. The Contractor, in the presence of the Westfield Public Works Department, shall mark the core to define the course to be tested. If the defined area is less than 1.5 times the maximum particle size, the core will be discarded and a core from a new random location will be selected for testing as determined by the Engineer. Within one work day of coring operations the Contractor shall clean, dry, refill and compact the core holes with suitable material approved by the Engineer.

E. The Contractor's testing lab representative shall take immediate possession of the cores. If the cores are subsequently damaged, additional coring within the specific section(s) will be required at locations to be determined by the Westfield Public Works Department.

F. Each core shall be tested within one work day of coring operation to determine thickness, bulk specific gravity, aggregate gradation and binder content. Test results shall then be transmitted either verbally or by other means to both the Contractor and the Westfield Public Works Department for verification before each subsequent bituminous lift is placed.

1. Average thickness of the cores shall not vary from the plan thickness more than 12.5 mm (0.5 inch) for HMA base and intermediate course(s) and 6.25 mm (0.25 inch) for HMA surface course(s) for acceptance in accordance with INDOTSS section 105.03.

2. The bulk specific gravity shall be determined in accordance with AASHTO T166 or AASHTO T 275. The in place density of a section for a mixture shall be expressed as:

Density % = (BSG/MSG) * 100
Where:
BSG = bulk specific gravity as determined from independent testing laboratory
MSG = maximum specific gravityr by cons as reported on job mix formula.

3. The calculated density of the cores shall not be less than 90% nor more than 96% a set out above. Test results which are outside stated limits shall be considered and adjudicated as a failed material in accordance with INDOTSS Section 105.03.

G. The Contractor's independent testing laboratory representative shall determine the aggregate gradation and binder content of the core samples in accordance with ITM 571. Aggregate gradation shall be within tolerances set forth in INDOTSS Section 402.04 and binder content shall be within ±0.5 percent from the job mix formula. Test results which are outside the stated limits shall be considered and adjudicated as a failed material in accordance with INDOTSS Section 105.03.

H. A copy of all core test results shall be submitted to the Engineer for verification of specification compliance within one calendar week of core testing.

I. The Contractor shall make the following tests at their cost and they shall be as specified in this Article and requested by the Engineer. Perform tests in accordance with the following ASTM Specifications:

Test	ASTM Specification
Slump	C143
Air Content	C173
Test Cylinders	C31 or C513
Core Samples	C42
Fly Ash	C311

1. Measure slump each time test beams or cylinders are to be made and at any other time requested by the Westfield Public Works Department. The slump shall be as specified in INDOTSS Section 501.03, or as otherwise specified herein, unless specifically excepted by the Westfield Public Works Department.

2. Measure air content each time test beams or cylinders are to be made and at any other time requested by the Westfield Public Works Department. The field test may be omitted if the air content is known prior to taking samples. The field test may not be omitted if fly ash is used in the mix.

3. Concrete paving mixes shall comply with guidelines of INDOTSS Section 501.04 and shall meet the testing requirements of Section 501.03 (a). However, in lieu of forming test beams as described in Section 501.04 (a) 2, the Contractor may substitute cylinder tests as follows:

a. Make test cylinders in sets of four. Field cure one cylinder and break at seven days. Laboratory cure the remaining three cylinders and break at 28 days. The Contractor shall be responsible for handling and transportation of cylinders.

b. If fly ash is used in the mix, a total set of seven cylinders shall be taken. The additional three cylinders shall be laboratory cured and broken at 56 days, if the 28–day strength does not meet specifications.
d
c. Make one set of test cylinders for each 100 cubic yards, or fraction of 100 cubic yards, of concrete placed; or at other times requested by the Westfield Public Works Department.

d. Unless otherwise specified, concrete shall have a 28–day compressive strength of 4,000 psi, as demonstrated by laboratory tests of cylinders.

3.12 PROTECTION

A. Maintain compacted aggregate subbase and surface true to line and grade and required density. Maintain subbase until prime coat is placed. Maintain surface until job is completed.

B. Do not permit vehicular traffic of any kind on any bituminous course until the bituminous mixture has hardened sufficiently not to be distorted beyond specified tolerances. Remove any foreign material which is on the surface of any course before the course is rolled or any subsequent course is placed.

C. Do not permit traffic on concrete pavement or walks until concrete has developed sufficient strength not to be marked or damaged. Do not permit vehicular traffic on concrete for at least 14 days.

D. Repair or replace damaged pavement and walks to the satisfaction of the Westfield Public Works Department Director or designee.

3.13 CLEANUP

Clean up the job site following pavement and surfacing restoration. Remove all rubbish, excess materials, temporary structures, and equipment. Leave the work in a neat and presentable condition.

PART 4 – FIGURES

4.1 STANDARD PAVEMENT DETAILS

FIGURE	DESCRIPTION
P–1	Typical Pavement Sections
P–2	Typical Pavement Sections
P–3	Typical Pavement Sections
P–4	Joint Location Detail
P–5	Concrete Joint Detail
P–6	Structure Details
P–7	Joint Location
P–8	Concrete Curb and Gutter Type I & II
P–9	Pipe Underdrain
P–10	Sidewalk Details
P–11	Sidewalk for Handicapped
P–12	Subdivision Cul–de–sac
P–13	Subdivision Temporary Cul–de–sac
P–14	Standard Barricade
P–15	Street Signs Detail
P–15.1	Typical Subdivision Regulatory Signs
P–16	Bicycle/Jogging Path
P–17	Typical Driveway Section
P–18	Repair of Cuts within Pavement Limits
P–21	Raised Pavement Marker Cast Metal Base, Type 1
P–21.1	Raised Pavement Marker Cast Metal Base, Type 2

END OF SECTION 02500
WESTFIELD STANDARD – 2006

811
Know what's below. Call before you dig.
Within Indiana Call
811 or 800–382–5544
24 Hours a Day, 7 Days a Week.
PER INDIANA STATE LAW IC 8–1–26. IT IS AGAINST THE LAW TO EXCAVATE WITHOUT NOTIFYING THE UNDERGROUND LOCATION SERVICE TWO (2) WORKING DAYS BEFORE COMMENCING WORK.

WEIHE ENGINEERS
Land Surveying | Civil Engineering
Landscape Architecture
10505 N. College Avenue
Indianapolis, Indiana 46280
weihe.net
317 | 846 - 6611
800 | 452 - 6408
317 | 843 - 0546 fax
ALLAN H. WEIHE, P.E., L.S. - FOUNDER

PROJECT NO.: W12.0262
DWG NAME: 120262-C301 spec.dwg
DESIGNED BY: EAC/MG
DRAWN BY: EAC/MG
CHECKED BY: JKS
DATE: 06.29.2012

DATE	BY	REVISIONS AND ISSUES
07/26/12	EAC/MG	50% CD SET
8/23/12	EAC	REVISIONS PER WESTFIELD REVIEW

JAMES K. SHINNEMAN REGISTERED NO. 10200392 STATE OF INDIANA PROFESSIONAL ENGINEER
APPROVAL PENDING
NOT FOR CONSTRUCTION
JAMES K. SHINNEMAN P.E. 10200392

PREPARED FOR:
EPIPHANY EVANGELICAL LUTHERAN CHURCH PHASE ONE
156TH AND DITCH ROAD, WESTFIELD IN
PAVING SPECIFICATIONS
Part of the SE Corner of SW/1/4 of Section 10, Township 18 North, Range 3 East, Washington Township, Hamilton County, Indiana

SHEET NO.
C301D
PROJECT NO.
W12.0262

LOCATION: H:\2012\w120262\Engineering\design\conset\120262-C301 spec.dwg
LAYOUT: C301 – D PAVING
DATE/TIME: August 24, 2012 – 12:09pm
PLOTTED BY: cartere

WESTFIELD STANDARD – 2006
SECTION 01001 – GENERAL REQUIREMENTS

1.1 DEFINITIONS

A. Whenever used in these specifications the following terms have the meanings indicated which are applicable to both the singular and plural thereof:

1. Town – The Town of Westfield, represented by the Town Council.
2. Public Works Department – An agency of the Town which manages public infrastructure within its jurisdiction.
3. Owner – Person or firm having control of the development site, and management of the project.
4. Contractor – The person, firm or corporation with whom the developer has entered into an agreement for construction of the project.
5. Project – The total construction of which the work to be provided may be the whole or part.
6. Work – The entire completed construction or the various separately identified parts thereof required to be furnished.

1.2 WORK TO BE PERFORMED

Work to be performed shall be in accordance with drawings and specifications approved by the Town.

1.3 SAFETY AND HEALTH REGULATIONS FOR CONSTRUCTION

The Contractor shall be solely responsible for all obligations prescribed as employer obligations under Chapter XVII of Title 29, Code of Federal Regulations, Part 1926, otherwise known as "Safety and Health Regulations for Construction."

1.4 DISCOVERY OF HAZARDOUS MATERIAL

If, during the course of this work, the existence of hazardous material, including asbestos containing material, is observed in the work area, the Contractor shall immediately notify the Owner in writing. The Contractor shall not perform any work pertinent to the hazardous material prior to receipt of special instructions from the Owner and the Town of Westfield. Asbestos containing material includes transite pipe.

1.5 EASEMENTS

A. The Developer will obtain utility and/or drainage easements over and through certain private lands for the construction and rehabilitation. The width or limits of such rights–of–way will be defined by the Town before the work or construction shall begin. If the methods of construction employed by the Contractor are such as to require the use of land beyond the limits obtained, he shall make his own agreements with the property owners affected for the use of such additional land.

B. In all such utility and/or drainage easements, the Contractor shall be required to carefully remove the property owner's fences, or other obstacles to the construction procedure, and replace the same after the work is installed. The backfilling shall be to the grade of the existing ground level or to the grade as established by the property owner in the event the property owner permits the deposit of excess material upon such land.

C. The cost of all such restoration of property shall be included in this work.

1.6 OPERATIONS WITHIN RIGHT–OF–WAY

In public thoroughfares, all operations of the Contractor, including those of temporary nature, must be confined within the applicable right–of–way limits after having obtained approval of the Town or other Local Governing Entity. If the methods of the construction employed by the Contractor are such as to require the use of land beyond the public thoroughfares, he shall make his own agreements with the property owners affected for the use of such additional.

1.7 PERMITS

A. The Developer will obtain permits which relate to the completed facilities. Permits obtained by the Developer include permits from the following:

1. Town of Westfield
2. Department of Natural Resources
3. U.S. Army Corps of Engineers
4. Indiana Department of Fire Prevention & Building Safety
5. Indiana Department of Transportation
6. Railroads
7. Hamilton County Surveyor's Office
8. Hamilton County Highway Dept.

B. The Contractor shall obtain permits which relate to construction procedures.

1. All necessary permits or licenses required from the State, County, or Town or other Local Governing Entity in connection with construction procedures under or along existing highways shall be obtained by and at the expense of the Contractor. The construction shall be performed by the Contractor in full accordance with any and all requirements of the State Highway Commission, County Road Commission, WPWD, or other Local Governing Entity including those applying to barricades, watchmen, guarding, lighting, storage of supplies, equipment and excavated materials, method of backfilling, final grading, replacement of pavement or road surface, and all other conditions or requirements which may be stipulated by the State Highway Commission, County Road Commission, or WPWD, whether specifically shown on the drawings or mentioned in the specification.

1.8 MAINTAINING TRAFFIC

A. Before closing any thoroughfare, the Contractor shall notify and, if necessary, obtain a permit or permits from the duly constituted public authority having jurisdiction, state, county, city/town. The Contractor will be responsible for notifying the local school corporation, all public safety agencies and the Town. The Contractor shall provide the WPWD a detour route plan for review prior to road closure.

B. The Contractor shall notify the Town of his intention to close a particular street 72 hours in advance of the proposed closing. The Contractor shall place all proper detour signs and barricades prior to the actual street closing.

C. During the construction, the Contractor shall be responsible for maintaining and protecting the pedestrian and vehicular traffic at all times on all streets involved and providing access to all residential and commercial establishments adjacent to the construction area. The Contractor shall furnish and maintain signage, barricades, flares, etc., in accordance with Indiana Manual on Uniform Traffic Control Devices. The signage, barricades, etc., must be in good condition.

D. The Contractor shall conduct his work in such manner as not to unduly or unnecessarily restrict or impede normal traffic through the streets of the community. Insofar as it is practicable, do not locate excavated material and spoil banks in such manner as to obstruct traffic. Keep the traveled way of all street, roads, and alleys clear and unobstructed insofar as is possible. Do not use streets, roads, or alleys for the storage of construction materials, equipment supplies, or excavated earth, except when and where necessary. If required by duly constituted public authority, the Contractor shall, at his own expense, construct bridges or other temporary crossing structures over trenches so as not to unduly restrict traffic. Such structures shall be of adequate strength and proper construction and shall be maintained by the Contractor in such manner as not to constitute an undue traffic hazard. Private driveways shall not be closed, except when and where necessary, and then only upon due advance notice to the WPWD and homeowner for the shortest practicable period of time, consistent with efficient and expeditious construction. The Contractor shall be liable for any damage to persons or property resulting from his work.

E. Streets in which excavation has occurred shall be temporarily restored to receive traffic as soon as possible. Permission to close additional streets shall be denied the Contractor if, in the opinion of The Town or the Engineer, the restoration on streets where excavation has occurred has not progressed satisfactorily.

1.9 WALKS AND PASSAGEWAYS

The Contractor, when required, shall make provisions at cross streets for the free passage of vehicles and foot passengers, either by bridging or otherwise. Do not obstruct the sidewalks, gutters, or streets, or prevent in any manner the flow of water in streets. Use all proper and necessary means to permit the free passage of surface water along the gutters. The Contractor shall immediately cart away all offensive matter, exercising such precaution as may be directed by the Engineer. All material excavated shall be so disposed of as to inconvenience the public and adjacent tenants as little as possible and to prevent injury to trees, sidewalks, fences, and adjacent property of all kinds. The Contractor may be required to erect suitable barriers to prevent such inconvenience or injury.

1.10 WARNING LIGHTS AND ARROW BOARDS

The Contractor shall place sufficient warning lights and arrow boards on or near the work and keep them illuminated during periods of construction and reduced visibility (from twilight in the evening until sunrise) and shall be held responsible for any damages that any party or the Owner may sustain in consequences of neglecting the necessary precaution in prosecuting this work.

1.11 UTILITIES

A. Temporary Removal: All existing Town utility systems which conflict with the construction of the work herein which can be temporarily removed and replaced shall be accomplished at the expense of the Developer or Contractor with approval from the Westfield Public Works Department. Work shall be done by the WPWD unless the WPWD approves in writing that the work may be done by the Developer or Contractor.

B. Permanent Relocation of Utilities: Water mains, storm sewer inlets, gas lines, wire lines, service connections, water and gas meter boxes, water and gas valve boxes, light and traffic standards, cable ways, signals, and other utility appurtenances located in the public right–of–way which would permanently interfere with the proposed Town improvements will be moved by the utility involved and paid for by the Developer.

1.12 SUBMITTALS – CERTIFICATE OF COMPLIANCE

The Developer shall upon request of the Town Council or the Westfield Public Works Department, submit to the WPWD a Certificate of Compliance from the manufacturer and/or supplier of each and every specified material or manufactured equipment item. The Certificate shall state that the material or the item of equipment to be furnished has been manufactured with materials in accordance with the applicable sections of all required codes, specifications, and standards as required by the specifications.

1.13 MANUFACTURER'S SERVICE TIME

A. When a lift station or other equipment is to be furnished by the Developer or Contractor and maintained by the WPWD, service by the manufacturer is required to be furnished as part of the work and shall be at the Contractor's expense.

B. The service provided shall be by a qualified representative to check the completed installation, place the equipment in operation, and instruct the Town's operators in the operation and maintenance procedures.

C. The services shall further demonstrate to the Town's complete satisfaction that the equipment will satisfactorily perform the functions for which it has been installed.

1.14 RECORD DRAWINGS

The Developer will be responsible for preparation and submittal of digital as–builts/record drawings as required by the requirements set forth in the Town's Digital As–built requirements. A copy of the most recent requirements are available on the Town's website at http://www.westfield.in.gov/egov/docs/1157135335_990447.pdf. Additional information can also be received from the WPWD GIS Division.

END OF SECTION 01001

WESTFIELD STANDARD – 2006
SECTION 02101 – TEMPORARY EROSION AND DUST CONTROL

PART 1 – GENERAL

1.1 DESCRIPTION

PLEASE SEE CHAPTER 600 OF THE TOWN OF WESTFIELD STORMWATER MANUAL.

WESTFIELD STANDARD – 2006
SECTION 02222 – EARTHWORK FOR UTILITIES

PART 1 – GENERAL

1.1 DESCRIPTION

A. Scope: Specifications for the stripping of topsoil and vegetation, excavation, trenching, bedding, filling, backfilling, compaction, and related work in connection with the installation of water mains, gravity sanitary sewers, storm sewers, and force mains are included in this Section.

B. Definitions

1. Excavation: Removal of earth and rock to form a trench for the installation of a water main, gravity sanitary sewer, storm sewer, or force main.

2. Earth: Unconsolidated material in the crust of the Earth derived by weathering and erosion. Earth includes:

a. Materials of both inorganic and organic origin;
b. Boulders less than 1/3 cubic yard in volume, gravel, sand, silt, and clay;
c. Materials which can be excavated with a backhoe, trenching machine, drag line, clam shell, bulldozer, highlift, or similar excavating equipment without the use of explosives, rock rippers, rock hammers, or jack hammers.

3. Rock: A natural aggregate of mineral particles connected by strong and permanent cohesive forces. Rock includes:

a. Limestone, sandstone, dolomite, granite, marble, and lava;
b. Boulders 1/3 cubic yard or more in volume;
c. Materials which cannot be excavated by equipment which is used to remove earth overburden without the use of explosives, rock rippers, rock hammers, or jack hammers;
d. Materials which cannot be excavated with a backhoe, trenching machine, drag line, clam shell, bulldozer, highlift, or similar excavating equipment without the use of explosives, rock rippers, rock hammers, or jack hammers.

4. Undercutting: Excavation of rock and unsuitable earth below the bottom of the pipe or conduit to be installed in the trench.

5. Subgrade: Undisturbed bottom of a trench.

6. Bedding: Earth placed in trench to support pipe and conduit.

7. Backfill and Fill: Earth placed in trench from the top of bedding to finished grade, or to subbase of pavement.

8. Topsoil: Earth containing sufficient organic materials to support the growth of grass.

1.2 SITE CONDITIONS

Existing storm sewers, sanitary sewers, water mains, gas mains, electric ducts, telephone ducts, steam mains and other under–ground structures, lines, and their house connections are to been shown on the plans according to the best available information. The exact location and protection of these facilities and structures, their support and maintenance in operation during construction (in cooperation with the proper authorities), is the responsibility of the Contractor.

PART 2 – PRODUCTS

2.1 BEDDING

A. Class I bedding shall be angular 6 to 12 mm (1/4 to 1/2 inch) graded stone, coral, slag, cinders, crushed stone or crushed shells.

B. Class II bedding shall be coarse sands and gravels with maximum particle size of 20 mm (3/4 inch). Class II bedding includes variously graded sands and gravels containing small percentage of fines generally granular and non–cohesive, either wet or dry. Soil types GW (well–graded gravel), SW (well–graded sand), and SP (pea gravel and/or crushed stone mixed with sand) are included in this class.

2.2 BACKFILL

A. General: Backfill shall be earth of such gradation and moisture content that the soil will compact to the specified density and remain stable. Unsuitable materials shall not be used.

B. Cover Material: Pipe cover material shall consist of durable particles ranging in size from fine to coarse (No. 200 to 1 inch) in size in a substantially uniform combination. Unwashed bank run sand and crushed bank–run gravel will be considered generally acceptable. Bedding material may be used for cover material.

C. Granular Backfill – Special Backfill: Granular backfill, when indicated on the plans or as ordered by the Engineer, shall be used for backfilling providing it meets the following soils classified by the Unified Soils Classification System ASTM D–2487 or the Indiana State Highway Standard Specification Section 211 – Special Fill and Backfill ("B" Borrow).

Group Symbols	Typical Names
GW	Well–graded gravels and gravel–sand mixtures, little or no fines
GP	Poorly graded gravels and gravel–sand mixtures, little or no fines
SW	Well–graded sands and gravelly sands, little or no fines
SP	Poorly graded sands and gravelly sands, little or no fines

D. Suitable Excavated Materials as Backfill: Excavated material shall be used when earth backfill is specified on the plans or where granular backfill or flowable fill is not specifically specified, provided that such material consists of loam, clay, or other materials which, are suitable for backfilling. Unsuitable backfill or frozen backfill material shall not be used. Suitable backfill shall be the following soils, classified by the Unified Soil Classification System, ASTM D–2487:

Group Symbols	Typical Names
GW	Well–graded gravels and gravel–sand mixtures, little or no fines
GP	Poorly graded gravels and gravel–sand mixtures, little or no fines
GM	Silty gravels, gravel–sand–silt mixtures
GC	Clayey gravels, gravel–sand–clay mixtures
SW	Well–graded sands and gravelly sands, little or no fines
SP	Poorly graded sands and gravelly sands, little or no fines
SM	Silty sands, sand–silt mixtures
SC	Clayey sands, sand–clay mixtures
ML	Inorganic silts, very fine sands, rock flour, silty or clayey fine sands
CL	Inorganic clays of low to medium plasticity, gravelly clays, sandy clays, silty clays, lean clays

E. Unsuitable Materials: Materials which are unsuitable for backfill include stones greater than 8 inches in their largest dimension, pavement, rubbish, debris, wood, metal, plastic, and the following soils, classified by the Unified Soil Classification System, ASTM D–2487:

Group Symbols	Typical Names
OL	Organic silts and organic silty clays of low plasticity
MH	Inorganic silts, micaceous or diatomaceous fine sands or silts, elastic siltsties
CH	Inorganic clays of high plasticity, fat clays
OH	Organic clays of medium to high plasticity
PT	Peat, muck, and other highly organic soils

F. Concrete Backfill: Concrete used for backfill around sewers, water mains, or other utility piping shall be Class B concrete.

G. Cellular Concrete: Light weight Cellular concrete may be used for filling of abandoned sewers as a grouting mixture for filling voids and as a substitute for backfill concrete in tunnels or casing pipes. The cellular concrete shall be produced by blending preformed foam with cement–sand grout slurry to produce a concrete having a fresh weight per cubic foot of not less than 75 pounds.

H. Flowable Fill

1. Flowable fill shall be in accordance with INDOTSS Section 213 and as specified herein.
a. Unconfined Compressive Strength (28 day): 50–150 psi
b. Flow Test – Diameter of Spread: 8 inches ± 1 inch

2. Design: Mix design shall be required to be submitted and approved by the Town of Westfield Public Works Department or designated engineer. A trial batch demonstration may be required. The mix design shall include a list of all ingredients, the source of all materials, the gradation of all aggregates, the names of all admixtures and dosage rates, and the batch weights. Except for adjustments to compensate for routine moisture fluctuations, minor mix design changes after the trial batch verification shall be documented and justified prior to implementation by the Contractor. A change in the source of materials or addition or deletion of admixtures or cementitious materials will require the mix design to be re–submitted for approval. The Contractor shall be required to provide test data from a laboratory which shows that the proposed mix design is in accordance with the requirements listed in this specification.

PART 3 – EXECUTION

3.1 EXISTING UTILITIES, STRUCTURES, AND PROPERTY

A. All poles, fences, sewer, gas, water or other pipes, wires, conduits and manholes, railroad tracks, buildings, structures and property along the routes of water mains, force mains, and sewers shall be supported and protected from damage by the Contractor.

B. Movable items such as mail boxes may be temporarily relocated during construction. Place movable items in their original location immediately after backfilling is completed, unless otherwise shown on the drawings. Replace movable items which are damaged during construction.

C. The Contractor shall proceed with caution in the excavation and preparation of trenches so that the exact location of underground utilities and structures, both known and unknown, may be determined. The Contractor shall be responsible for the repair of utilities and structures when broken or otherwise damaged.

D. Whenever, in the opinion of the Westfield Public Works Department, it is necessary to explore and excavate to determine the location of underground structures, the Contractor shall make explorations and excavations for such purpose.

E. Wherever sewer, gas, water, or other pipes or conduits cross the trench, the Contractor shall support said pipes and conduits without damage to them. The manner of supporting such pipes, etc., shall be subject to the approval of the owner of the utility involved.

F. When utility lines that have to be removed or relocated are encountered within the areas of operations, the Contractor shall notify the Westfield Public Works Department or the owner of that utility in ample time for the necessary measure to be taken to prevent interruption of the service.

G. The Contractor shall so conduct the work that no equipment, material, or debris will be placed or allowed to fall upon private property in the vicinity of the work unless he shall have first obtained the property owner's written consent thereto and shall have shown said written consent to the Town.

H. All excavated material shall be piled in a manner that will avoid obstructing sidewalks and driveways. Hydrants under pressure, valve pit covers, valve boxes, curb stop boxes, fire and police call boxes, or other utility controls shall be left unobstructed and accessible until the work is completed. Gutters shall be kept clear or other satisfactory provisions made for street drainage, and natural watercourses shall not be obstructed.

I. All streets, alleys, pavements, parkways, and private property shall be thoroughly cleaned of all surplus materials, earth, and rubbish placed thereon by the Contractor.

3.2 CLEARING

A. Clear and remove logs, stumps, brush, vegetation, rubbish, and other perishable matter from the project site as required to perform work.

B. Do not remove or damage trees that do not interfere with the work. Completely remove trees required to be removed, including stumps and roots. Properly treat damaged trees which can be saved.

C. Debris from the tree removal, including trunk, branches, leaves, roots and stumps, shall not be buried or burned on the job site, but must be completely hauled away and disposed of at the Developer's or Contractor's expense.

D. Clear and remove trees, logs, stumps, brush, vegetation, rubbish, and other perishable matter from the existing and proposed right–of–way.

3.3 STRIPPING AND STOCKPILING OF TOPSOIL

A. Strip topsoil and vegetation from the excavated areas. Clean topsoil may be stockpiled for reuse as the upper 6 inches of the areas to be seeded.

3.4 PAVEMENT AND WALK REMOVAL

A. Remove existing pavement and walks from the excavated areas. Remove excavated asphaltic and concrete materials from the job site as these materials are excavated.

B. The width of pavement removed along the normal trench for the installation of pipe and structures shall not be less than two (2) feet on either side of the trench and be in accordance with Standard Detail P–18. Remove all existing pavement when excavation requires the removal of 75% or more of the total existing pavement width. If over 50% of one travel lane is disturbed, restoration must be extended to the centerline of the roadway.
C. Remove walks completely when excavation is along the length of a walk and requires the removal of part of the walk. Remove walks to existing joints in the walks when excavation crosses walks. If there are no joints in an existing walk, the width of walk removed shall not exceed the width of the trench by more than 12 inches on each side of the trench.

D. Use methods to remove pavement and walks that will assure the breaking or cutting of pavement and walks along straight lines. The face of the remaining pavement and walk surfaces shall be approximately vertical.

E. All concrete sidewalk andasphalt multiuse path removed must be replaced per the WPWD Standars Section 02500 and Standard Details P–10, P–11, and P–16. All restoration work is subject to inspection by WPWD.

3.5 EXCAVATING

A. General: After stripping of topsoil and vegetation, perform excavations of every description regardless of material encountered within the grading limits of the project to lines and grades as indicated on the drawings or as otherwise specified.

1. Materials removed below the depths indicated shall be replaced to the indicated excavation grade with satisfactory bedding materials placed and compacted.

B. Dewatering: Keep excavations free from water until the water mains, force mains, sewers, structures, and appurtenances to be constructed in the excavations are completed and will safely withstand forces from water. Provide sufficient dewatering equipment and make satisfactory arrangements for the disposal of the water without undue interference with other work, damage to property, or damage to the environment.

1. Operate dewatering equipment ahead of pipe laying and keep the water level below the pipe invert until the pipe is secured by backfill.

C. Trenching: Trees, boulders, and other surface encumbrances, located so as to create a hazard to employees involved in excavation work or in the vicinity thereof at any time during operations, shall be removed or made safe before excavating is begun.

1. Do not open more than 100 feet of trench in advance of the installed pipe, unless otherwise directed or permitted by the Westfield Public Works Department or designee. Excavate the trench within 6 inches of full depth for a distance of at least 30 feet in advance of the pipe laying, unless otherwise directed or permitted.

2. Contractor shall be responsible for the determination of the angle of repose of the soil in which the trenching is to be done. Excavate all slopes to at least the angle of repose except for areas where solid rock allows for line drilling or presplitting, or where shoring or trench box is to be used.

3. Sides, slopes, and faces of all excavations shall meet accepted engineering requirements by scaling, benching, barricading, rock bolting, wire meshing, or other equally effective means. Give special attention to slopes which may be adversely affected by weather or moisture content.

4. Flatten the trench sides when an excavation has water conditions, silty materials, loose boulders, and areas where erosion, deep frost action, and slide planes appear.

5. Shoring, sheeting, trench box, or other means shall be used to support sides of trenches in hard or compact soil when the trench is more than 5 feet in depth and 8 feet or more in length. Sides of trenches shall include embankments adjacent to trenches. In lieu of shoring, the sides of the trench above the 5–foot level may be sloped to preclude collapse, but shall not be steeper than a 1–foot rise to each 1/2–foot horizontal. Provide a bench of 4 feet minimum at the toe of the sloped portion of the trench wall when the outside diameter of the pipe to be installed is greater than 6 feet.

6. Use diversion ditches, dikes, or other suitable means to prevent surface water from entering an excavation and to provide adequate drainage of the area adjacent to the excavation. Do not allow water to accumulate in an excavation. If possible, the grade should be away from the excavation.

7. Excavations shall be inspected by a competent Contractor's representative after every rainstorm or other hazard–increasing occurrence, and the protection against slides and cave–ins shall be increased, if necessary.

8. Do not store excavated or other material nearer than 4 feet from the edge of any excavation. Store and retain materials as to prevent materials from falling or sliding back into the excavation. Install substantial stop log or barricades when mobile equipment is utilized or allowed adjacent to excavations.

9. The width of trenches in earth for water main pipe, sewers, basin connections, house connections, and other drains up to and including 33 inches in internal diameter shall provide a clearance of not less than 8 inches or more than 10 inches on each side of the pipe. Trenches for pipe larger than 33 inches in internal diameter shall provide a clearance of not less than 10 inches or more than 14 inches on each side of the pipe.

10. The maximum clear width of trenches in earth for manholes shall be the greatest external width of the structure plus the space necessary for the construction and removal of the forms and construction of masonry work.

11. The design of the water main, force main, and/or sewer pipe and structures is predicated upon the width of trench specified in this Article. The Contractor shall be responsible for the provision and installation, at his own expense, of such remedial measures as may be directed by the Westfield Public Works Department or designee; should the trench width limits specified in this Article be exceeded.

12. Test the air in excavations in locations where oxygen deficiency or gaseous conditions are possible. Establish controls to assure acceptable atmospheric conditions. Provide adequate ventilation and eliminate sources of ignition when flammable gases are present. Attended emergency rescue equipment, such as breathing apparatus, a safety harness and line, and basket stretcher, shall be readily available where adverse atmospheric conditions may exist or develop in an excavation.

13. Provide walkways or bridges with guardrails where employees or equipment are required or permitted to cross over excavations.

14. Provide ladders where employees are required to be in trenches 4 feet deep or more. Ladders shall extend from the floor of the trench to at least 3 feet above the top of the excavation. Locate ladders to provide means of exit without more than 25 feet of lateral travel.

15. Provide adequate barriers and physically protect all remotely located excavations. Barricade or cover all wells, pits, shafts, and similar excavations. Backfill temporary wells, pits, shafts, and similar excavations upon completion of exploration and similar operations.

D. Quicksand: Carry on the work with utmost vigor and proceed with the work expeditiously when running sand, quicksand, or other bad or treacherous ground is encountered. Install bedding to support the pipe as directed.

E. Blasting: Removal of rock from the excavation may be facilitated by the use of controlled explosives.

1. Blasting supervision and Blasting Monitoring and Control Programs shall meet the requirements of this Section.

2. Storage procedures for explosives shall be developed by the Contractor and submitted to the Engineer before explosives are brought to the job site.

3.6 SHEETING

A. The Contractor shall be responsible for construction means, methods, techniques, and procedures, and for providing a safe place for the performance of the work by the Contractor, Subcontractors, suppliers and their employees, and for access use, work, or occupancy by all authorized persons.

B. The Contractor shall be solely responsible for all obligations prescribed as employer obligations under Chapter XVII of Title 29, Code of Federal Regulations, Part 1926, otherwise known as "Safety and Health Regulations for Construction."

C. Adequate supporting systems, such as sheeting, shoring, piling, cribbing, and bracing shall be furnished and installed by the Contractor as required to protect existing buildings, utilities, and property from damage during the progress of the work.

3.7 STORAGE AND REMOVAL OF EXCAVATED MATERIAL

A. Suitable excavated material required for filling and backfilling operations may be stockpiled in on–site locations, at the discretion of the Westfield Public Works Department or designee, until the material is ready to be placed.

B. Remove unsuitable materials from the job site as unsuitable materials are excavated. Remove surplus suitable materials from the job site as trenches are backfilled.

3.8 TEMPORARY PLUGS

Prevent foreign matter from entering pipe while it is being installed. Do not place debris, tools, clothing, or other material in the pipe. Close the open ends of pipe by watertight plugs when pipe laying is not in progress. Remove any earth or other material that enters pipe, lateral pipe, or appurtenances through any open pipe end.

3.9 BACKFILLING WATER MAIN AND FORCE MAIN TRENCHES

A. Backfilling of water main and force main trenches shall meet the requirements of ANSI/AWWA C600, unless otherwise specified in this Section.

B. Do not backfill trenches and excavations until all utilities have been inspected by the Westfield Public Works Department or designee and until all underground utilities and piping systems are installed in accordance with the requirements of the specifications and the drawings. Required hydrostatic tests may be applied to the line either before or after the trench is backfilled, subject to approval of the Westfield Public Works Department or designee.

C. Place and tamp bedding and backfill in a manner which will not damage pipe coating, wrapping, or encasement.

D. Material from the trench subgrade to the centerline of the pipe shall be Class II bedding. Place bedding by hand or approved mechanical methods in layers of 8 inches loose depth. Compact bedding by hand tamping or with a power operated hand vibrating compactor. Deposit bedding in the trench for its full width on each side of the pipe simultaneously.

E. Place pipe cover material from the centerline of the pipe to 12 inches over the pipe. Compact pipe cover material to the density required to allow backfill over the pipe cover material to be compacted to the density specified in this Article.

3.11 MAINTAINING TRAFFIC

A. Before closing any thoroughfare, the Contractor shall notify and, if necessary, obtain a permit or permits from the duly constituted public authority having jurisdiction, state, county, or city/town, school corporation, and public safety agencies, which notice shall be given not less than 72 hours in advance of the time when it may be necessary in the process of construction to close such thoroughfare.

B. The Contractor shall notify the Town of his intention to close a particular street 72 hours in advance of hte proposed closing. The Contractor shall place all proper detour signs and barricades prior to the actual street closing.

C. During the construction, the Contractor shall be responsible for maintaining and protecting the pedestrian and vehicular traffic at all times on all streets involved and providing access to all residential and commercial establishments adjacent to the constuction area. The Contractor shall furnish and maintain signage, barricades, flares, etc., in accordance with the latest version of the Indiana Manual on Uniform Traffic Control Devices. The signage, barricades, etc., must be in good condition.

D. The Contractor shall conduct his work in such manner as not to unduly or unnecessarily restrict or impede normal traffic through the streets of the community. Insofar as it is practicable, excavated material and spoil banks shall not be located in such manner as to obstruct traffic; and the traveled way of all streets, roads, and alleys shall be kept clear and unobstructed insofar as is possible and shall not be used for the storage of construction materials, equipment, supplies, or excavated earth, except when and where necessary. If required by duly constituted public authority, the Contractor shall, at his own expense, construct bridges or other temporary crossing structures over trenches so as not to unduly restrict traffic. Such structures shall be of adequate strength and proper construction and shall be maintained by the Contractor in such manner as not to constitute an undue traffic hazard. Private driveways shall not be closed except when and where necessary, and then only upon due advance notice to the Engineer and for the shortest practicable period of time consistent with efficient and expeditious construction. The Contractor shall be liable for any damages to persons or property resulting from his work.

3.12 WALKS AND PASSAGEWAYS

The Contractor, when required, shall make provisions at cross streets for the free passage of vehicles and foot passengers, either by bridging or otherwise, and shall not obstruct the sidewalks, gutters, or streets, nor prevent in any manner the flow of water in the latter, but shall use all proper and necessary means to permit the free passage of surface water along the gutters. The Contractor shall immediately cart away all offensive matter, exercising such precaution as may be directed by Westfield Public Works Department or designee. All material excavated must be so disposed of as to inconvenience the public and adjacent tenants as little as possible and to prevent injury to trees, sidewalks, fences, and adjacent property of all kinds. The Contractor may be required to erect suitable barriers to prevent such inconvenience or injury.

3.13 WARNING LIGHTS

The Contractor shall place sufficient warning lights on or near the work and keep them illuminated during periods of reduced visibility (from twilight in the evening until sunrise) and will be held responsible for any damages that any party or the Town may sustain in consequences of neglecting the necessary precaution in prosecuting this work.

F. Do not use the following materials for backfill:

1. Unsuitable materials;
2. Frozen materials;
3. Materials which are too wet or too dry to be compacted to the densities specified in this Article.

G. Where the edge of the trench is within 5 feet of the existing roadway pavement, it shall be backfilled with Flowable Backfill. Where the trench is located within existing pavement or any trench specifically indicated on the drawings shall be backfilled with Flowable Backfill. Where the edge of the trench is within 5 feet or crosses a proposed roadway pavement, it shall be backfilled with Flowable Backfill. Place Flowable Backfill in lifts. In all areas, cuts and trenches shall be backfilled with Flowable backfill to within 1 ½" inches of the existing asphalt paved surface The remainder of the trench is to be filled with crushed stone and compacted in place, prior to opening the street to traffic. The Contractor shall add crushed stone and grade until sufficient settlement has taken place and final restoration is made.

3.10 BACKFILLING SANITARY SEWER AND STORM SEWER TRENCHES

A. Do not backfill trenches and excavations until all utilities have been inspected by the Westfield Public Works Department or designee and until all underground utilities and piping systems are installed in accordance with the requirements of the specifications and the drawings.

B. Place and tamp bedding and backfill in a manner which will not damage pipe coating, wrapping, or encasement.

C. Bedding procedures for sanitary sewers and storm sewers shall be as specified in manufacturers recommendation or WPWD specification. The more stringent specification shall apply.

D. If bedding does not cover the pipe, place pipe cover material from the top of bedding to 12 inches over the pipe. Compact pipe cover material to the density required to allow backfill over the pipe cover material to be compacted to the density specified in this Article.

E. Do not use the following materials for backfill:

1. Unsuitable materials;
2. Frozen materials;
3. Materials which are too wet or too dry to be compacted to the densities specified in this Article.

F. Where the edge of the trench is within 5 feet of or crosses the existing roadway pavement, it shall be backfilled with Flowable Backfill. Backfill any trench specifically indicated on the drawings with Flowable Backfill.

G. Trenches Not Requiring Special Backfill: Backfill trenches not requiring granular backfill with suitable excavated material. Place and compact backfill to produce an adequate foundation for the applicable paved or unpaved surface treatment. Fill and restore any settlement of the backfill. In paved areas, backfill shall be maintained to subbase elevation. In unpaved areas, backfill shall be mounded above finish grade to allow for settlement. Grade unpaved area to be restored 6 inches below finish grade after settlement of backfill and immediately before restoration of vegetated areas. Place 6 inches of topsoil over area to be restored.

H. Trenches in Traveled Pavements: All cuts and trenches in paved streets or other paved areas shall be backfilled with flowable fill material unless granular backfill is specifically approved by the Director of Public Works to within 12 inches of the street surface in grass areas or to the bottom of the pavement section.

3.14 CLEANUP AND MAINTENANCE

A. Cleanup the job site as backfilling is completed. Remove excess earth, rock, bedding, materials, and backfill materials. Remove unused piping materials, structure components, and appurtenances. Restore items moved, damaged, or destroyed during construction. Grade area to be restored. Leave backfill mounded over trenches which are not backfilled with Special Backfill. Cleanup and restoration specified in this paragraph shall be completed within 1,000 feet of excavation.

B. Restoration of grass, bushes, trees, and other plants shall be completed by Contractor to original condition or better condition.

C. Restoration of pavement and walks shall be specified in Section 02500, Paving and Surfacing. A temporary driving surface, such as crushed stone, shall be compacted in place in the trench area as backfilling is complete. Cold–mix asphalt patching material may be used as a temporary driving surface at the Contractor's option or when specifically called for in the plans or specifications. Temporary pavement shall not be more than 1,000 feet behind the excavation. When no existing pavement remains after excavation, a temporary compacted aggregate surfacing may be provided instead of the permanent pavement or a temporary cold–mix asphalt pavement.

D. Maintain the job site until the work has been completed and accepted. Fill trenches which settle when settlement is visible. Restore items damaged by construction or improper restoration. Keep dust conditions to minimum by the use of water.

END OF SECTION 02222
WESTFIELD STANDARD = 2006
SECTION 02558 – IDENTIFICATION/LOCATION TAPE AND WIRE

PART 1 – GENERAL

1.1 SCOPE

A. Furnish and install identification and warning tape over the centerline of all buried piping. See Figure W–1 for detail.

B. Furnish and install location wire for all buried non–metallic piping. See Figure W–1 for detail.

PART 2 – PRODUCTS

2.1 IDENTIFICATION TAPE

A. Identification/Location Tape

1. Identification/location tape shall be manufactured of inert polyethylene so as to be highly resistant to alkalis, acids and other destructive agents found in soil, and shall have a minimum thickness of four mils. Tape width shall be a minimum of three inches and a maximum of six inches and shall have background color specified below, imprinted with black letters. Imprint shall be as specified below and shall repeat itself a minimum of once every two feet for entire length of tape.

2. Warning tape shall be as described above except no solid foil is required.

B. Tape background colors and imprints shall be as follows:

Imprint	Background Color
"Caution – Water Line Buried Below"	Blue
"Caution – Sanitary Force Main Buried Below"	Green

C. Identification tape shall be as follows:

1. For PVC Water Pipe: Terra Tape Sentry Line or approved equal.
2. For PVC Sanitary Force Main Pipe: Terre Tape Sentry Line or approved equal.

D. Products above are as manufactured by Reef Industries, Inc., Houston, Texas or equivalent manufacture.

2.2 LOCATOR WIRE

Locator wire shall be #10 solid copper wire.

PART 3 – EXECUTION

3.1 INSTALLATION OF IDENTIFICATION TAPE

A. Identification tape shall be installed over all buried piping in accordance with the manufacture's installation instructions and as specified herein.

B. Identification tape shall be installed one foot over centerline of pipe unless otherwise noted on plans.

C. Warning tape shall be installed two feet below final grade over centerline of pipe.

3.2 INSTALLATION OF LOCATOR WIRE FOR NON–METALLIC PIPE

A. Identification tape shall be installed over all buried piping in accordance with the manufacturer's installation instructions and as specified herein.

B. For sanitary force main, locator wire shall be installed along the top and taped to the pipe. Access points for the locator wire shall be placed every 400 feet. Access points shall be 4–ionch diameter PVC with threaded metallic caps painted green. Pipe shall be flush with greade. Wire shall be pulled to within 6–inches of the top of the pipe.

C. For open–cut trenches installlation, one locator wire should be used. For trenchless installations (jack and bore or directional drilling) two locator wires shall be used.

END OF SECTION 02558
WESTFIELD STANDARD – 2006

Know what's **below.**
Call before you dig.

Within Indiana Call
811 or 800–382–5544
24 Hours a Day, 7 Days a Week.

PER INDIANA STATE LAW IC 8–1–26. IT IS AGAINST THE LAW TO EXCAVATE WITHOUT NOTIFYING THE UNDERGROUND LOCATION SERVICE TWO (2) WORKING DAYS BEFORE COMMENCING WORK.

10505 N. College Avenue
Indianapolis, Indiana 46280
weihe.net

317 | 846 - 6611
800 | 452 - 6408
317 | 843 - 0546 *fax*

ALLAN H. WEIHE, P.E., L.S. - FOUNDER

WEIHE ENGINEERS
Land Surveying | Civil Engineering
Landscape Architecture

PROJECT NO.:	DWG NAME:	DESIGNED BY:	DRAWN BY:	CHECKED BY:	DATE:
W12.0262	120262–C301 spec.dwg	EAC/MG	EAC/MG	JKS	06.29.2012

REVISIONS AND ISSUES	DATE	BY
50% CD SET	07/26/12	EAC/MG
△ REVISIONS PER WESTFIELD REVIEW	8/23/12	EAC

JAMES K. SHINNEMAN REGISTERED NO. 10200392 STATE OF INDIANA PROFESSIONAL ENGINEER
APPROVAL PENDING NOT FOR CONSTRUCTION

JAMES K. SHINNEMAN P.E. 10200392

PREPARED FOR:
EPIPHANY EVANGELICAL LUTHERAN CHURCH PHASE ONE
156TH AND DITCH ROAD, WESTFIELD IN

GENERAL SPECIFICATIONS
Part of the SE Corner of SW/1/4 of Section 10, Township 18 North, Range 3 East, Washington Township, Hamilton County, Indiana

SHEET NO.
C301

PROJECT NO.
W12.0262

LOCATION: H:\2012\w120262\Engineering\design\conset\120262–C301 spec.dwg
LAYOUT: C301 – SPECS
DATE/TIME: August 24, 2012 – 12:08pm
PLOTTED BY: cartere

SECTION 02538 - GRINDER PUMP STATIONS

PART 1 – GENERAL

1.01 SCOPE OF WORK

A. THE CONTRACTOR SHALL FURNISH AND INSTALL A COMPLETE FACTORY–BUILT AND TESTED GRINDER PUMPS STATIONS, EACH CONSISTING OF A GRINDER PUMP SUITABLY MOUNTED IN A BASIN CONSTRUCTED OF HIGH DENSITY POLYETHYLENE (HDPE), ELECTRICAL QUICK DISCONNECT, PUMP REMOVAL SYSTEM, SHUT–OFF VALVE, ANTI–SIPHON VALVE, AND CHECK VALVE ASSEMBLED WITHIN THE BASINS, ELECTRICAL ALARM/DISCONNECT PANEL, AND ALL NECESSARY INTERNAL WIRING AND CONTROLS. ALL EQUIPMENT SPECIFIED HEREIN AND, AND SHOWN ON THE DRAWINGS SHALL ALSO BE PROVIDED.

1.02 QUALITY ASSURANCE

MANUFACTURER QUALIFICATIONS:

1. THE EQUIPMENT SPECIFIED SHALL BE A PRODUCT OF A COMPANY EXPERIENCE IN THE DESIGN AND MANUFACTURE OF GRINDER PUMPS FOR SPECIFIC USE IN LOW PRESSURE SEWAGE SYSTEMS. THE COMPANY SHALL SUBMIT DETAILED INSTALLATION AND USER INSTRUCTIONS FOR THIS PRODUCT; SUBMIT EVIDENCE OF AN ESTABLISHED SERVICE PROGRAM INCLUDING COMPLETE PARTS AND SERVICE MANUALS, AND BE RESPONSIBLE FOR MAINTAINING A CONTINUING INVENTORY OF GRINDER PUMP REPLACEMENT PARTS.
2. THE MANUFACTURER SHALL PROVIDE A REFERENCE AND CONTACT LIST FROM THREE OF ITS LARGEST CONTIGUOUS GRINDER PUMP INSTALLATIONS.

1.03 SUBMITTALS

SUBMIT SHOP DRAWINGS FOR REVIEW BY THE ENGINEER SHOWING THE FOLLOWING:

1. COMPLETE DESCRIPTION IN SUFFICIENT DETAIL TO PERMIT AN ITEMIZED COMPARISON WITH THE SPECIFICATIONS.
2. DIMENSIONS AND INSTALLATION REQUIREMENTS.
3. DESCRIPTIVE INFORMATION INCLUDING MANUFACTURERS' CATALOG CUTS AND SPECIFICATIONS FOR ALL COMPONENTS.
4. ELECTRICAL SCHEMATICS AND LAYOUTS.
5. HYDRAULIC CALCULATIONS DEMONSTRATING COMPLIANCE WITH THE SPECIFIED HYDRAULIC CHARACTERISTICS.

PART 2 – PRODUCTS

2.01 MANUFACTURER

GRINDER PUMP STATION SHALL BE MODEL DH152–93 (DUPLEX SYSTEM) AS MANUFACTURED BY ENVIRONMENT ONE CORPORATION, NISKAYUNA, NEW YORK.

2.02 GENERAL REQUIREMENTS

A. PUMP THE PUMP SHALL BE CAPABLE OF DELIVERING 15 GPM AGAINST A RATED TOTAL DYNAMIC HEAD OF 0 FEET, 11 GMP AGAINST A RATED TOTAL DYNAMIC HEAD OF 92 FEET AND 7.8 GPM AGAINST A RATED TOTAL DYNAMIC HEAD OF 185 FEET. THE PUMP MUST ALSO BE CAPABLE OF OPERATING AT NEGATIVE TOTAL DYNAMIC HEAD WITHOUT OVERLOADING THE MOTOR. UNDER NO CONDITIONS SHALL IN–LINE PIPING OF VALVING BE ALLOWED TO CREATE A FALSE APPARENT HEAD. THE MATERIAL SHALL BE SUITABLE FOR DOMESTIC WASTEWATER SERVICE. ITS PHYSICAL PROPERTIES SHALL INCLUDE HIGH TEAR AND ABRASION RESISTANCE, GREASE RESISTANCE, WATER AND DETERGENT RESISTANCE, TEMPERATURE STABILITY, EXCELLENT AGING PROPERTIES, AND OUTSTANDING WEAR RESISTANCE.

B. GRINDER: THE GRINDER SHALL BE PLACED IMMEDIATELY BELOW THE PUMPING ELEMENTS AND SHALL BE DIRECT–DRIVEN BY A SINGLE, ONE–PIECE MOTOR SHAFT. THE GRINDER WILL BE OF THE ROTATING TYPE WITH A STATIONAR HARDENED AND GROUND STAINLESS STEEL SHREDDING RING SPACED IN CLOSE ANNULAR ALIGNMENT WITH THE DRIVEN IMPELLER ASSEMBLY, WHICH SHALL CARRY TWO HARDENED TYPE 400 SERIES STAINLESS STEEL CUTTER BARS.

THIS ASSEMBLY SHALL BE DYNAMICALLY BALANCED AND OPERATE WITHOUT OBJECTIONABLE NOISE OR VIBRATION OVER THE ENTIRE RANGE OF RECOMMENDED OPERATING PRESSURES. THE GRINDER SHALL BE CONSTRUCTED SO AS TO ELIMINATE CLOGGING AND JAMMING UNDER ALL NORMAL OPERATING CONDITIONS INCLUDING STARTING. SUFFICIENT VORTEX ACTION SHALL BE CREATED TO SCOUR THE TANK FREE OF DEPOSITS OR SLUDGE BANKS WHICH WOULD IMPAIR THE OPERATION OF THE PUMP.

THE GRINDER SHALL BE CAPABLE OF REDUCING ALL COMPONENTS IN NORMAL DOMESTIC SEWAGE, INCLUDING A REASONABLE AMOUNT OF "FOREIGN OBJECTS," SUCH AS PAPER, WOOD, PLASTIC, GLASS, RUBBER AND THE LIKE, TO FINELY–DIVIDED PARTICLES WHICH WILL PASS FREELY THROUGH THE PASSAGES OF THE PUMP AND THE 1–1/4" DIAMETER STAINLESS STEEL DISCHARGE PIPING.

C. ELECTRIC MOTOR: AS A MAXIMUM, THE MOTOR SHALL BE A 1 HP, 1725 RPM, 240 VOLT 60 HERTZ, 1 PHASE, CAPACITOR START, BALL BEARING, AIR–COOLED INDUCTION TYPE WITH A LOW STARTING CURRENT NOT TO EXCEED 30 AMPERES AND HIGH STARTING TORQUE OF 8.4 FOOT POUNDS. INHERENT PROTECTION AGAINST RUNNING OVERLOADS OR LOCKED ROTOR CONDITIONS FOR THE PUMP MOTOR SHALL BE PROVIDED BY THE USE OF AN AUTOMATIC–RESET, INTEGRAL THERMAL OVERLOAD PROTECTOR INCORPORATED INTO THE MOTOR. THIS MOTOR PROTECTOR COMBINATION SHALL HAVE BEEN SPECIFICALLY INVESTIGATED AND LISTED BY UNDERWRITERS LABORATORIES, INC., FOR THE APPLICATION.

D. MECHANICAL SEAL: THE PUMP/CORE SHALL BE PROVIDED WITH A MECHANICAL SHAFT SEAL TO PREVENT LEAKAGE BETWEEN THE MOTOR AND PUMP. THE SEAL SHALL HAVE A STATIONARY CERAMIC SEAT AND CARBON ROTATING SURFACE WITH FACES PRECISION LAPPED AND HELD IN POSITION BY A STAINLESS STEEL SPRING.

E. TANK AND INTEGRAL ACCESSWAY: THE TANK SHALL BE MADE OF FIBERGLASS OR HIGH DENSITY POLYETHYLENE, WITH A MELT INDEX OF 2.0 GRAMS/10 MINUTES OR LOWER TO ASSURE HIGH ENVIRONMENTAL STRESS CRACKING RESISTANCE.
CORRUGATED SECTIONS ARE TO BE MADE OF A DOUBLE WALL CONSTRUCTION WITH THE INTERNAL WALL BEING GENERALLY SMOOTH TO PROMOTE SCOURING. CORRUGATIONS OF THE OUTSIDE WALL ARE TO BE OF A MINIMUM AMPLITUDE OF 1 1/2" TO PROVIDE NECESSARY TRANSVERSE STIFFNESS. ANY INCIDENTAL SECTIONS OF A SINGLE WALL CONSTRUCTION ARE TO BE A MINIMUM .250 INCH THICK. ALL SEAMS CREATED DURING TANK CONSTRUCTION ARE TO BE THERMALLY WELDED AND FACTORY TESTED FOR LEAK TIGHTNESS. TANK WALL AND BOTTOM MUST WITHSTAND THE PRESSURE EXERTED BY SATURATED SOIL LOADING AT MAXIMUM BURIAL DEPTH. ALL STATION COMPONENTS MUST FUNCTION NORMALLY WHEN EXPOSED TO 150 PERCENT OF THE MAXIMUM EXTERNAL SOIL AND HYDROSTATIC PRESSURE.

THE GRINDER PUMP STATION TANK SHALL HAVE AN OPTIMUM CAPACITY OF 3000 GALLONS.

THE ACCESSWAY SHALL BE AN INTEGRAL EXTENSION OF THE WET WELL ASSEMBLY AND INCLUDE A LOCKABLE COVER ASSEMBLY MOUNTING AND WATERTIGHT CAPABILITY. ACCESSWAY DESIGN AND CONSTRUCTION SHALL ENABLE FIELD ADJUSTMENT OF STATION HEIGHT IN INCREMENTS OF 4" OR LESS WITHOUT THE USE OF ANY ADHESIVES OR SEALANTS REQUIRING CURE TIME BEFORE INSTALLATION CAN BE COMPLETED.

THE STATION SHALL HAVE ALL NECESSARY PENETRATIONS MOLDED IN AND FACTORY SEALED. TO ENSURE A LEAK FREE INSTALLATION NO FIELD PENETRATIONS SHALL BE ACCEPTABLE.

ALL DISCHARGE PIPING SHALL BE CONSTRUCTED OF 304 SERIES STAINLESS STEEL AND TERMINATE OUTSIDE THE ACCESSWAY BULKHEAD WITH A STAINLESS STEEL, 1 1/4 INCH FEMALE NPT FITTING. THE DISCHARGE PIPING SHALL INCLUDE A STAINLESS STEEL BALL VALVE RATED FOR 200 PSI WOG; PVC BALL VALVES WILL NOT BE ACCEPTED. THE BULKHEAD PENETRATION SHALL BE FACTORY INSTALLED AND WARRANTED BY THE MANUFACTURER TO BE WATERTIGHT.

THE ACCESSWAY SHALL INCLUDE A SINGLE NEMA 6P ELECTRICAL QUICK DISCONNECT (EQD) FOR ALL POWER AND CONTROL FUNCTIONS, FACTORY INSTALLED WITH ACCESSWAY PENETRATIONS WARRANTED BY THE MANUFACTURER TO BE WATERTIGHT. PLUG–TYPE CONNECTIONS OF THE POWER CABLE ONTO THE PUMP HOUSING WILL NOT BE ACCEPTABLE DUE TO THE POTENTIAL FOR LEAKS AND ELECTRICAL SHORTS. THE ACCESSWAY SHALL ALSO INCLUDE A 2 INCH PVC VENT TO PREVENT SEWAGE GASES FROM ACCUMULATING IN THE TANK.

F. CHECK VALVE: THE PUMP DISCHARGE SHALL BE EQUIPPED WITH A FACTORY INSTALLED, GRAVITY OPERATED, FLAPPER–TYPE INTEGRAL CHECK VALVE BUILT INTO THE STAINLESS STEEL DISCHARGE PIPING. THE CHECK VALVE WILL PROVIDE A FULL–PORTED PASSAGEWAY WHEN OPEN, AND SHALL INTRODUCE A FRICTION LOSS OF LESS THAN 6 INCHES OF WATER AT MAXIMUM RATED FLOW. MOVING PARTS WILL BE MADE OF A 300 SERIES STAINLESS STEEL AND FABRIC REINFORCED SYNTHETIC ELASTOMER TO ENSURE CORROSION RESISTANCE, DIMENSIONAL STABILITY, AND FATIGUE STRENGTH. A NONMETALLIC HINGE SHALL BE AN INTEGRAL PART OF THE FLAPPER ASSEMBLY PROVIDING A MAXIMUM DEGREE OF FREEDOM TO ASSURE SEATING EVEN AT A VERY LOW BACK–PRESSURE. THE VALVE BODY SHALL BE AN INJECTION MOLDED PART MADE OF GLASS FILLED PVC. BALL TYPE CHECK VALVES ARE UNACCEPTABLE DUE TO THEIR LIMITED SEALING CAPACITY IN SLURRY APPLICATIONS.

G. EACH GRINDER PUMP INSTALLATION SHALL ALSO INCLUDE ONE SEPARATE CHECK VALVE OF THE TYPE MANUFACTURED BY ENVIROMENT ONE CORPORATION FOR INSTALLATION IN THE 1 1/4" SERVICE LATERAL BETWEEN THE GRINDER PUMP STATION AND THE SEWER MAIN, PREFERABLY NEXT TO THE CURB STOP.

H. ANTI–SIPHON VALVE: THE PUMP DISCHARGE SHALL BE EQUIPPED WITH A FACTORY–INSTALLED, GRAVITY–OPERATED, FLAPPER–TYPE INTEGRAL ANTI–SIPHON VALVE BUILT INTO THE STAINLESS STEEL DISCHARGE PIPING. MOVING PARTS WILL BE MADE OF 300 SERIES STAINLESS STEEL AND FABRIC–REINFORCED SYNTHETIC ELASTOMER TO ENSURE CORROSION RESISTANCE, DIMENSIONAL STABILITY, AND FATIGUE STRENGTH. A NONMETALLIC HINGE SHALL BE AN INTEGRAL PART OF THE FLAPPER ASSEMBLY, PROVIDING A MAXIMUM DEGREE OF FREEDOM TO ENSURE PROPER OPERATION EVEN AT A VERY LOW PRESSURE. THE VALVE BODY SHALL BE INJECTION–MOLDED FROM A GLASS–FILLED THERMOPLASTIC RESIN. HOLES OR PORTS IN THE DISCHARGE PIPING ARE NOT ACCEPTABLE ANTI–SIPHON DEVICES, DUE TO THEIR TENDENCY TO CLOG FROM THE SOLIDS IN THE SLURRY BEING PUMPED.

I. CONTROLS: ALL NECESSARY CONTROLS, INCLUDING MOTOR AND LEVEL CONTROLS, SHALL BE LOCATED IN THE TOP HOUSING OF THE CORE UNIT. THE TOP HOUSING WILL BE ATTACHED WITH STAINLESS STEEL FASTENERS.

NON–FOULING WASTEWATER LEVEL CONTROLS FOR CONTROLLING PUMP OPERATION SHALL BE ACCOMPLISHED BY MONITORING THE PRESSURE CHANGES IN AN INTEGRAL AIR COLUMN CONNECTED TO A PRESSURE SWITCH. THE LEVEL DETECTION DEVICE SHALL HAVE NO MOVING PARTS IN DIRECT CONTACT WITH THE WASTEWATER. HIGH–LEVEL SENSING WILL BE ACCOMPLISHED IN THE MANNER DETAILED ABOVE BY A SEPARATE AIR–BELL SENSOR AND PRESSURE SWITCH OF THE SAME TYPE. CLOSURE OF THE HIGH–LEVEL SENSING DEVICE WILL ENERGIZE AN ALARM CIRCUIT AS WELL AS A REDUNDANT PUMP–ON CIRCUIT. FOR INCREASED RELIABILITY, PUMP ON/OFF AND HIGH–LEVEL ALARM FUNCTIONS SHALL NOT BE CONTROLLED BY THE SAME SWITCH. FLOAT SWITCHES OF ANY KIND, INCLUDING FLOAT TREES, WILL NOT BE ACCEPTED DUE TO THE PERIODIC NEED TO MAINTAIN (RINSING, CLEANING) SUCH DEVICES.

TO ASSURE RELIABLE OPERATION OF THE PRESSURE SWITCHES, EACH CORE SHALL BE EQUIPPED WITH A BREATHER ASSEMBLY, COMPLETE WITH A SUITABLE MEANS TO PREVENT ACCIDENTAL ENTRY OF WATER INTO THE MOTOR COMPARTMENT.

J. ALARM PANEL: EACH GRINDER PUMP STATION SHALL INCLUDE A NEMA 4X, UL LISTED ALARM PANEL SUITABLE FOR WALL MOUNTING. THE NEMA 4X ENCLOSURE SHALL BE MANUFACTURED OF THERMOPLASTIC TO ASSURE CORROSION RESISTANCE. THE ENCLOSURE SHALL INCLUDE A HINGED, LOCKABLE COVER, PADLOCK, AND SECURED DEAD FRONT.

THE ALARM PANEL SHALL INCLUDE THE FOLLOWING FEATURES: AUDIO & VISUAL ALARM, PUSH–TO–RUN SWITCH, AND HIGH LEVEL (REDUNDANT) PUMP STARTING CONTROL. THE ALARM SEQUENCE IS TO BE AS FOLLOWS:

1. WHEN LIQUID LEVEL IN THE SEWAGE WET–WELL RISES ABOVE THE ALARM LEVEL, VISUAL AND AUDIO ALARMS WILL BE ACTIVATED. THE CONTACTS ON THE ALARM PRESSURE SWITCH WILL CLOSE. THE REDUNDANT PUMP STARTING SYSTEM WILL BE ENERGIZED.
2. THE AUDIO ALARM MAY BE SILENCED BY MEANS OF THE EXTERNALLY MOUNTED, PUSH–TO–SILENCE BUTTON.
3. VISUAL ALARM REMAINS ILLUMINATED UNTIL THE SEWAGE LEVEL IN THE WET–WELL DROPS BELOW THE "OFF" SETTING OF THE ALARM PRESSURE SWITCH.
4. THE ENTIRE ALARM PANEL AS MANUFACTURED, SHALL BE LISTED BY UNDERWRITERS LABORATORIES, INC.

K. SERVICEABILITY: THE GRINDER PUMP CORE UNIT SHALL HAVE TWO LIFTING HOOKS COMPLETE WITH NYLON LIFT–OUT HARNESS CONNECTED TO ITS TOP HOUSING TO FACILITATE EASY CORE REMOVAL WHEN NECESSARY. ALL MECHANICAL AND ELECTRICAL CONNECTIONS MUST PROVIDE EASY DISCONNECT CAPABILITY FOR CORE UNIT REMOVAL AND INSTALLATION. A PUSH–TO–RUN FEATURE WILL BE PROVIDED FOR FIELD TROUBLE SHOOTING. ALL MOTOR CONTROL COMPONENTS SHALL BE MOUNTED ON A READILY REPLACEABLE BRACKET FOR EASE OF FIELD SERVICE.

L. OSHA CONFINED SPACE: ALL MAINTENANCE TASKS FOR THE GRINDER PUMP STATION MUST BE POSSIBLE WITHOUT ENTRY INTO THE GRINDER PUMP STATION (AS PER OSHA 1910.146, PERMIT–REQUIRED CONFINED SPACES). "ENTRY MEANS THE ACTION BY WHICH A PERSON PASSES THROUGH AN OPENING INTO A PERMIT–REQUIRED CONFINED SPACE. ENTRY INCLUDES ENSUING WORK ACTIVITIES IN THAT SPACE AND IS CONSIDERED TO HAVE OCCURRED AS SOON AS ANY PART OF THE ENTRANT'S BODY BREAKS THE PLANE OF AN OPENING INTO THE SPACE."

M. SAFETY: THE GRINDER PUMP SHALL BE FREE FROM ELECTRICAL AND FIRE HAZARDS AS REQUIRED IN A RESIDENTIAL ENVIRONMENT. AS EVIDENCE OF COMPLIANCE WITH THIS REQUIREMENT, THE COMPLETELY ASSEMBLED AND WIRED GRINDER PUMP STATION SHALL BE LISTED BY UNDERWRITERS LABORATORIES, INC., TO BE SAFE AND APPROPRIATE FOR THE INTENDED USE. UL LISTING OF COMPONENTS OF THE STATION, OR THIRD–PARTY TESTING TO UL STANDARD WILL NOT BE ACCEPTABLE.

THE GRINDER PUMP SHALL MEET ACCEPTED STANDARDS FOR PLUMBING EQUIPMENT FOR USE IN OR NEAR RESIDENCES, SHALL BE FREE FROM NOISE, ODOR, OR HEALTH HAZARDS, AND SHALL HAVE BEEN TESTED BY AN INDEPENDENT LABORATORY TO CERTIFY ITS CAPABILITY TO PERFORM AS SPECIFIED IN EITHER INDIVIDUAL OR LOW PRESSURE SEWER SYSTEM APPLICATIONS. AS EVIDENCE OF COMPLIANCE WITH THIS REQUIREMENT, THE GRINDER PUMP SHALL BEAR THE SEAL OF NSF INTERNATIONAL. THIRD–PARTY TESTING TO NSF STANDARD WILL NOT BE ACCEPTABLE.

PART 3 – EXECUTION

3.01 FACTORY TEST

A. EACH GRINDER PUMP SHALL BE SUBMERGED AND OPERATED FOR 5 MINUTES (MINIMUM). INCLUDED IN THIS PROCEDURE WILL BE THE TESTING OF ALL ANCILLARY COMPONENTS SUCH AS, THE ANTI–SIPHON VALVE, CHECK VALVE, DISCHARGE ASSEMBLY AND EACH UNIT'S DEDICATED LEVEL CONTROLS AND MOTOR CONTROLS. ALL FACTORY TESTS SHALL INCORPORATE EACH OF THE ABOVE LISTED ITEMS. ACTUAL APPURTENANCES AND CONTROLS WHICH WILL BE INSTALLED IN THE FIELD, SHALL BE PARTICULAR TO THE TESTED PUMP ONLY. A COMMON SET OF APPURTENANCES AND CONTROLS FOR ALL PUMPS WILL NOT BE ACCEPTABLE. CERTIFIED TEST RESULTS SHALL BE AVAILABLE UPON REQUEST SHOWING THE OPERATION OF EACH GRINDER PUMP AT TWO (2) DIFFERENT POINTS ON ITS CURVE, WITH THE MAXIMUM PRESSURE NO LESS THAN 60 PSI. THE ENGINEER RESERVES THE RIGHT TO INSPECT SUCH TESTING PROCEDURES WITH REPRESENTATIVES OF THE OWNER, AT THE GRINDER PUMP MANUFACTURER'S FACILITY.

B. ALL COMPLETED STATIONS SHALL BE FACTORY LEAK TESTED TO ASSURE THE INTEGRITY OF ALL JOINTS, SEAMS AND PENETRATIONS. ALL NECESSARY PENETRATIONS SUCH AS INLETS, DISCHARGE FITTINGS AND CABLE CONNECTORS SHALL BE INCLUDED IN THIS TEST ALONG WITH THEIR RESPECTIVE SEALING MEANS (GROMMETS, GASKETS ETC.).

3.02 INSTALLATION

CONTRACTOR SHALL INSTALL GRINDER PUMP UNITS IN ACCORDANCE WITH THE MANUFACTURER'S DRAWINGS, SHOP DRAWINGS AND INSTRUCTIONS.

3.03 START–UP AND FIELD TESTING

A. THE MANUFACTURER SHALL PROVIDE THE SERVICES OF QUALIFIED FACTORY TRAINED TECHNICIAN(S) WHO SHALL INSPECT THE PLACEMENT AND WIRING OF EACH STATION, PERFORM FIELD TESTS, AND INSTRUCT THE OWNER'S PERSONNEL IN THE OPERATION AND MAINTENANCE OF THE EQUIPMENT BEFORE THE STATIONS ARE ACCEPTED BY THE OWNER.

B. ALL EQUIPMENT AND MATERIALS NECESSARY TO PERFORM TESTING SHALL BE THE RESPONSIBILITY OF THE INSTALLING CONTRACTOR. THIS WILL INCLUDE, AS A MINIMUM, A PORTABLE GENERATOR (IF TEMPORARY POWER IS REQUIRED) AND WATER IN EACH BASIN.

C. THE SERVICES OF A TRAINED FACTORY–AUTHORIZED TECHNICIAN SHALL BE PROVIDED FOR TWO DAYS.

D. UPON COMPLETION OF THE START–UP AND TESTING, THE CONTRACTOR SHALL SUBMIT TO THE ENGINEER THE START–UP AUTHORIZATION FORM DESCRIBING THE RESULTS OF THE TESTS PERFORMED FOR EACH GRINDER PUMP STATION. FINAL ACCEPTANCE OF THE SYSTEM WILL NOT OCCUR UNTIL AUTHORIZATION FORMS HAVE BEEN RECEIVED FOR EACH PUMP STATION INSTALLED AND ANY INSTALLATION DEFICIENCIES CORRECTED.

3.04 MANUALS

THE CONTRACTOR SHALL SUPPLY FOUR (4) COPIES OF OPERATION AND MAINTENANCE MANUALS TO THE OWNER, AND ONE (1) COPY OF THE SAME TO THE ENGINEER.

3.05 WARRANTY

THE CONTRACTOR GUARANTEES AND WARRANTS THAT DURING THE FIRST YEAR OF OPERATION, THE PUMPS WILL OPERATE SATISFACTORILY AND CONTINUOUSLY ACCORDING TO THE PUMP SCHEDULE SPECIFIED HEREIN, AND THAT DUE NOTICE HAS BEEN GIVEN BY THE OWNER, HE OR THE PUMP MANUFACTURER WILL PROCEED, WITHIN A REASONABLE TIME, TO ADJUST, REGULATE, REPAIR AND RENEW AT HIS OWN EXPENSE OR PERFORM SUCH WORK AS IS NECESSARY TO MAINTAIN THE GUARANTEED CAPACITIES, EFFICIENCIES AND PERFORMANCES.

SECTION 02531 - SEWAGE FORCEMAINS

PART 1 – GENERAL

1.01 SCOPE OF WORK

A. PROVIDE ALL LABOR, MATERIALS, EQUIPMENT AND SERVICES REQUIRED FOR FURNISHING AND INSTALLING ALL PIPING AND APPURTENANCES SPECIFIED HEREIN.

1.02 SUBMITTALS

A. SUBMIT MANUFACTURER'S DATA AND SHOP DRAWINGS FOR ALL MATERIALS AND AS SPECIFIED HEREIN. COMPLY WITH ALL REQUIREMENTS OF SECTION 01340.

B. A NOTARIZED CERTIFICATION SHALL BE FURNISHED FOR ALL PIPE AND FITTINGS THAT VERIFIES COMPLIANCE WITH ALL APPLICABLE SPECIFICATIONS. THE REQUIREMENT FOR THIS CERTIFICATION DOES NOT ELIMINATE THE NEED FOR SHOP DRAWINGS SUBMITTALS IN COMPLIANCE WITH SECTION 01340.

1.05 EXISTING CONDITIONS

A. THE EXISTING PIPING SHOWN ON THE CONTRACT DRAWINGS IS BASED ON THE BEST AVAILABLE INFORMATION. THE ENGINEER MAKES NO GUARANTEE AS TO THE ACCURACY OF THE LOCATIONS OR TYPE OF PIPING DEPICTED. ALL NEW PIPING THAT TIES INTO EXISTING LINES MUST BE MADE COMPATIBLE WITH THAT PIPING. SO THAT PIPING CONFLICTS MAY BE AVOIDED, CONTRACTOR SHALL OPEN UP HIS TRENCH WELL AHEAD OF THE PIPE LAYING OPERATION TO CONFIRM EXACT LOCATIONS OF EXISTING PIPING BEFORE INSTALLING ANY NEW PIPING. CONTRACTOR SHALL PROVIDE ALL FITTINGS AND ADAPTERS NECESSARY TO COMPLETE ALL CONNECTIONS TO EXISTING PIPING.

PART 2 – PRODUCTS

2.01 HIGH DENSITY POLYETHYLENE PIPE

A. GENERAL: HIGH DENSITY POLYETHYLENE PIPE SHALL BE "DRISCOPIPE" AS MANUFACTURED BY PHILLIPS PRODUCT COMPANY, INC., PLEXCO AS MANUFACTURED BY CHEVRON, POLYPIPE, OR APPROVED EQUAL.

B. MATERIALS FOR POLYETHYLENE PIPE:

1. PIPE SHALL BE MANUFACTURED FROM A PE 3408 RESIN LISTED WITH THE PLASTIC PIPE INSTITUTE (PPI) AS TR–4. THE RESIN MATERIAL SHALL MEET THE REQUIREMENTS OF ASTM D3350 WITH A MINIMUM CELL CLASSIFICATION OF PE 345564C. PIPES HAVING AN OUTSIDE DIAMETER OF 3.5" AND LARGER SHALL HAVE A MANUFACTURING STANDARD OF ASTM F–714. PIPES SMALLER THAN 3.5" SHALL HAVE A MANUFACTURING STANDARD OF ASTM D 3035. PIPE O.D. SIZES 4" TO 54" SHALL BE AVAILABLE IN STEEL PIPE SIZES (IPS). THE PIPE SHALL CONTAIN NO RECYCLED COMPOUNDS EXCEPT THAT GENERATED IN THE MANUFACTURER'S OWN PLANT FROM RESIN OF THE SAME SPECIFICATION FROM THE SAME RAW MATERIAL. THE PIPE SHALL BE HOMOGENEOUS THROUGHOUT AND FREE OF VISIBLE CRACKS, HOLES, FOREIGN INCLUSIONS, VOIDS, OR OTHER INJURIOUS DEFECTS.
2. PIPE MADE FROM THESE RESINS MUST HAVE A LONG–TERM STRENGTH RATING OF 1,600 PSI OR MORE.
3. THE POLYETHYLENE RESIN SHALL CONTAIN ANTIOXIDANTS AND SHALL BE STABILIZED WITH CARBON BLACK AGAINST ULTRA–VIOLET DEGRADATION TO PROVIDE PROTECTION DURING PROCESSING AND SUBSEQUENT WEATHER EXPOSURE. PIPE SHALL HAVE CONTINOUS GREEN STRIP MARKING IMBEDDED INTO BLACK WALL RESIN OR PIPE SHALL BE GREEN IN COLOR. NO OTHER COLOR SHALL BE ALLOWED FOR SANITARY SEWER PIPE INSTALLATION.
4. THE POLYETHYLENE RESIN COMPOUND SHALL HAVE A RESISTANCE TO ENVIRONMENTAL STRESS CRACKING AS DETERMINED BY THE PROCEDURE DETAILED IN ASTM D 1693, CONDITION B WITH SAMPLE PREPARATION BY PROCEDURE C OF NOT LESS THAN 200 HOURS.

C. POLYETHYLENE PIPE AND FITTINGS:

1. LATERAL TAP – BUTT FUSION FITTINGS SHALL BE IN ACCORDANCE WITH ASTM D3261 AND SHALL BE MANUFACTURED BY INJECTION MOLDING, A COMBINATION OF EXTRUSION AND MACHINING, OR FABRICATED FROM HDPE PIPE CONFORMING TO THIS SPECIFICATION. ALL FITTINGS SHALL BE PRESSURE RATED TO PROVIDE A WORKING PRESSURE RATING NO LESS THAN THAT OF THE PIPE. FABRICATED FITTINGS SHALL BE MANUFACTURED USING A MCELROY DATALOGGER TO RECORD FUSION PRESSURE AND TEMPERATURE. A GRAPHIC REPRESENTATION OF THE TEMPERATURE AND PRESSURE DATA FOR ALL FUSION JOINTS MADE PRODUCING FITTINGS SHALL BE MAINTAINED AS PART OF THE QUALITY CONTROL. THE FITTING SHALL BE HOMOGENEOUS THROUGHOUT AND FREE OF VISIBLE CRACKS, HOLES, FOREIGN INCLUSIONS, VOIDS, OR OTHER INJURIOUS DEFECTS.
2. ELECTROFUSION FITTINGS SHALL BE PE3408 HDPE, CELL CLASSIFICATION OF 345464C AS DETERMINED BY ASTM D3350–02 AND BE THE SAME BASE RESIN AS THE PIPE. ELECTROFUSION FITTINGS SHALL HAVE A MANUFACTURING STANDARD OF ASTM F1055.
3. FLANGED AND MECHANICAL JOINT ADAPTERS: FLANGED AND MECHANICAL JOINT ADAPTERS SHALL BE PE 3408 HDPE, CELL CLASSIFICATION OF 345464C AS DETERMINED BY ASTM D3350–02 AND BE THE SAME BASE RESIN AS THE PIPE. FLANGED AND MECHANICAL JOINT ADAPTERS SHALL HAVE A MANUFACTURING STANDARD OF ASTM D3216. ALL ADAPTERS SHALL BE PRESSURE RATED TO PROVIDE A WORKING PRESSURE RATING NO LESS THAN THAT OF THE PIPE.
4. THE PIPE SHALL BE DESIGNED FOR A NORMAL INTERNAL WORKING PRESSURE AND EARTH COVER OVER TOP OF THE PIPE TO SUIT THE CONDITIONS OF PROPOSED USE.
5. EACH LENGTH OF PIPE SHALL BE MARKED, AT NO MORE THAN 10 FOOT INTERVALS, WITH THE FOLLOWING INFORMATION:

   NOMINAL PIPE SIZE
   TYPE PLASTIC MATERIAL – PE3408
   PIPE PRESSURE RATING
   MANUFACTURER'S NAME, TRADEMARK AND CODE
6. ALL PIPE SHALL BE MADE FROM VIRGIN MATERIAL. NO REWORK COMPOUND
7. PIPE SHALL BE HOMOGENOUS THROUGHOUT, AND BE FREE OF VISIBLE CRACKS, HOLES, FOREIGN MATERIAL, BLISTERS, OR OTHER DELETERIOUS FAULTS.
8. FITTINGS FOR THE POLYETHYLENE PIPE LINE SHALL BE MOLDED OR FABRICATED FROM THE SAME MATERIAL AS SPECIFIED HEREINBEFORE FOR THE HIGH DENSITY POLYETHYLENE PIPE.
9. FITTINGS FOR BENDS 22–1/2° OR GREATER SHALL BE PROVIDED AS SHOWN ON THE DRAWINGS. FOR ALIGNMENT CHANGES OF LESS THAN 20° DEFLECTION, THE PIPE MAY BE LAID IN CURVES WITH A RADIUS OF 100 FEET OR GREATER.
10. ALL RUN–OF–THE–PIPE FITTINGS SHALL BE FUSION WELDED INTO THE PIPELINE. TEE BRANCHES SHALL BE OF THE SIZE SHOWN ON THE DRAWINGS AND SHALL BE FUSION WELDED.
11. FITTINGS SHALL BE CAPABLE OF WITHSTANDING THE SAME PRESSURE AND LOADING CONDITIONS SPECIFIED FOR THE PIPE.
12. WYE BRANCHES SHALL BE TRUE WYES.

D. PIPE JOINTING:

1. PIPE TO BE JOINED BY LEAKPROOF , THERMAL, BUTT FUSION JOINTS. ALL FUSION MUST BE DONE BY PERSONNEL TRAINED BY THE PIPE SUPPLIER USING TOOLS APPROVED BY THE PIPE SUPPLIER.
2. THE FUSION MACHINE SHALL HAVE HYDRAULIC PRESSURE CONTROL FOR FUSING 2 PIPE ENDS TOGETHER; IT SHALL INCLUDE PRESSURE FUSION INDICATING GAUGES TO CORRECTLY MONITOR FUSION PRESSURES. THE MACHINES CORRECTLY MONITOR FUSION PRESSURES. THE MACHINES SHALL BE EQUIPPED WITH AN ELECTRIC OR GASOLINE ENGINE POWERED FACING UNIT TO TRIM IRREGULARITIES FROM THE PIPE ENDS. THE HEATING PLATE ON THE FUSION MACHINE SHALL BE ELECTRICALLY HEATED AND THERMOSTATICALLY CONTROLLED AND SHALL CONTAIN A TEMPERATURE GAUGE FOR MONITORING TEMPERATURE.
3. JOINT STRENGTH MUST BE EQUAL TO THAT OF ADJACENT PIPE AS DEMONSTRATED BY TENSILE TEST. IN ADDITION, RESULTS OF TENSILE IMPACT TESTING OF JOINT SHOULD INDICATE A DUCTILE RATHER THAN A BRITTLE FRACTURE. EXTERNAL APPEARANCE OF FUSION BEAD SHOULD BE SMOOTH WITHOUT SIGNIFICANT JUNCTURE GROOVE.
4. THREADED OR SOLVENT CEMENT JOINTS AND CONNECTIONS ARE NOT PERMITTED.

E. JOINING, TERMINATING OR ADAPTING BY MECHANICAL MEANS:

1. THE POLYETHYLENE PIPE SHALL BE CONNECTED TO SYSTEMS OR FITTINGS OF OTHER MATERIALS BY MEANS OF AN ASSEMBLY CONSISTING OF A POLYETHYLENE FLANGE ADAPTER OR MECHANICAL JOIN ADAPTER BUTT–FUSED TO THE PIPE, A BACKUP RING OF EITHER CAST IRON, STEEL, OR HIGH SILICA ALUMINUM ALLOY MADE TO ANSI B–16.1 DIMENSIONAL STANDARDS (WITH MODIFIED PRESSURE RATINGS), BOLTS OF COMPATIBLE MATERIAL (INSULATED FROM THE FITTINGS WHERE NECESSARY) AND A GASKET OF REINFORCED BLACK RUBBER, OR OTHER MATERIAL APPROVED BY THE ENGINEER, CUT TO FIT THE JOINT. IN ALL CASES, THE BOLTS SHALL BE DRAWING UP EVENLY AND IN LINE.
2. TERMINATION OF VALVES, OR FITTINGS SUCH AS TEES, BONDS, ETC., MADE OF OTHER MATERIALS SHALL BE BY THE FLANGE ASSEMBLIES SPECIFIED HEREINBEFORE. THE PIPE ADJACENT TO THESE JOINTS AND TO JOINTS THEMSELVES MUST BE RIGIDLY SUPPORTED FOR A DISTANCE OF ONE PIPE DIAMETER OR 1 FOOT, WHICHEVER IS GREATER, BEYOND THE FLANGE ASSEMBLY.
3. APPURTENANCES MUST BE PLACED ON THEIR OWN FOUNDATIONS, UNSUPPORTED BY THE PIPE, IN ACCORDANCE WITH THE DETAIL PLANS.

F. TOOLS AND PROCEDURES:

1. FUSION JOINTING AND OTHER PROCEDURES NECESSARY FOR CORRECT ASSEMBLY OF THE POLYETHYLENE PIPE AND FITTINGS WILL BE DONE ONLY BY PERSONNEL TRAINED IN THOSE SKILLS BY THE PIPE SUPPLIER.
2. ONLY THOSE TOOLS DESIGNED FOR AFOREMENTIONED PROCEDURES AND APPROVED BY THE PIPE SUPPLIER SHALL BE USED FOR ASSEMBLY OF PIPE AND FITTINGS TO INSURE PROPER INSTALLATION.

G. STANDARD DIMENSION RATIO (SDR) FOR PIPE:

ALL HDPE PIPE FOR FORCEMAIN APPLICATIONS SHALL BE DR 11 (160 PSI WPR).

2.02 DUCTILE IRON PIPE AND FITTINGS

A. DUCTILE IRON PIPE SHALL CONFORM TO THE CURRENT REQUIREMENTS OF AWWA C151, PRESSURE CLASS 350, WITH PUSH_ON JOINTS UNLESS OTHERWISE NOTED ON DRAWINGS.

B. THE INTERIOR OF THE PIPE SHALL BE COATED IN ACCORDANCE WITH THE CURRENT REQUIREMENTS OF AWWA C104. THICKNESS OF THE LINING SHALL BE SET FORTH PER AWWA C104 UNLESS OTHERWISE DIRECTED BY THE ENGINEER. THE EXTERIOR OF ALL PIPE, UNLESS OTHERWISE SPECIFIED, SHALL BE COATED, REFER TO PROTECTO 401, INDUSTRY STANDARD.

C. EACH PIECE OF PIPE SHALL BEAR THE MANUFACTURER'S NAME OR TRADEMARK, THE YEAR IN WHICH IT WAS PRODUCED AND THE LETTERS "DI" OR THE WORD "DUCTILE". PIPE MANUFACTURER SHALL FURNISH NOTARIZED CERTIFICATE OF COMPLIANCE TO THE ABOVE AWWA OR ANSI SPECIFICATIONS. FITTINGS SHALL BE DUCTILE IRON AND RATED FOR A MINIMUM OF 350 PSI IN ACCORDANCE WITH THE CURRENT REQUIREMENTS OF AWWA C110 (ANSI A21.10) SHOWN THEREIN. FITTINGS SHALL HAVE MECHANICAL JOINTS MEETING THE CURRENT REQUIREMENTS OF AWWA C111 (ANSI A21.11). FITTINGS SHALL HAVE INTERIOR CEMENT_MORTAR LINING AS SPECIFIED FOR THE PIPE. COMPACT DUCTILE IRON FITTINGS MEETING THE CURRENT REQUIREMENTS OF AWWA C153 WILL ALSO BE ACCEPTABLE. PROVIDE NOTARIZED CERTIFICATE OF COMPLIANCE TO THE AWWA SPECIFICATIONS.

D. PROVIDE AWWA C110 MECHANICAL JOINT PLUGS AND LOCKED OR RESTRAINED PIPE JOINTS FOR DUCTILE IRON PIPE AND FITTINGS BETWEEN VALVE VAULT AND CONNECTION TO HDPE FORCEMAIN. ACCEPTABLE MECHANICAL RESTRAINTS FOR RESTRAINING DIP MECHANICAL JOINT FITTINGS INCLUDE: EBAA SERIES 1100, UNI–FLANGE SERIES 1400, AND UNI–FLANGE SERIES 1300–C. ACCEPTABLE MECHANICAL RESTRAINTS FOR RESTRAINING MECHANICAL DIP JOINTS INCLUDE: EBAA MEGALUG, EBAA SERIES 3100, UNI–FLANGE SERIES 1300–C, AND UNI–FLANGE SERIES 1400. FITTINGS UNDER STRUCTURES SHALL BE MECHANICAL JOINT WITH RETAINER GLANDS.

E. THE CLEANING AND ASSEMBLY OF PIPE AND FITTING JOINTS SHALL BE IN ACCORDANCE WITH THE MANUFACTURER'S RECOMMENDATIONS.

2.03 COUPLING AND ADAPTORS

A. FLEXIBLE COUPLINGS SHALL BE OF THE SLEEVE TYPE WITH A MIDDLE RING, TWO ROUND_WEDGE SHAPED RUBBER GASKETS AT EACH END, TWO FOLLOWING RINGS TOGETHER AND COMPRESS THE GASKET AGAINST THE PIPE. FLEXIBLE COUPLINGS SHALL BE STEEL WITH MINIMUM WALL THICKNESS OF THE MIDDLE RING OR SLEEVE INSTALLED ON PIPE BEING 5/16_INCH FOR PIPE SMALLER THAN 10 INCHES, 3/8_INCH FOR PIPE 10 INCHES OR LARGER. THE MINIMUM LENGTH OF THE MIDDLE RING SHALL BE 5_INCHES FOR PIPE SIZES UP TO 10 INCHES AND 7 INCHES FOR PIPE 10 INCHES TO 30 INCHES. THE PIPE STOP SHALL BE REMOVED. GASKETS SHALL BE SUITABLE FOR 250 PSI PRESSURE RATING OR AT RATED WORKING PRESSURE OF THE CONNECTING PIPE. COUPLINGS SHALL BE HARNESSED AND BE DESIGNED FOR 250 PSI.

B. FLANGED ADAPTERS SHALL HAVE ONE END SUITABLE FOR BOLTING TO A PIPE FLANGE AND THE OTHER END OF FLEXIBLE COUPLING SIMILAR TO THAT DESCRIBED HEREINBEFORE. ALL PRESSURE PIPING WITH COUPLINGS OR ADAPTERS SHALL BE HARNESSED WITH FULL THREADED RODS SPANNING ACROSS THE COUPLINGS OR ADAPTERS. THE ADAPTERS SHALL BE FURNISHED WITH BOLTS OF AN APPROVED CORROSION RESISTANT STEEL ALLOY, EXTENDING TO THE ADJACENT PIPE FLANGES. FLANGES ON FLANGED ADAPTER (UNLESS OTHERWISE INDICATED OR REQUIRED) SHALL BE FACED AND DRILLED ANSI B16.1 CLASS 125.

C. FLEXIBLE COUPLINGS AND FLANGED ADAPTERS SHALL BE AS MANUFACTURED BY DRESSER, ROCKWELL, OR APPROVED EQUAL, PER THE FOLLOWING, UNLESS OTHERWISE SPECIFIED AND/OR NOTED ON THE DRAWINGS:

D. STEEL COUPLINGS FOR JOINING SAME SIZE, PLAIN_END, STEEL, CAST IRON, AND PVC PLASTIC PIPE

DRESSER	ROCKWELL
STYLE 138	4LL

E. TRANSITION COUPLINGS FOR JOINING PIPE OF DIFFERENT OUTSIDE DIAMETERS_

DRESSER	ROCKWELL
STYLE 162 (4"_12")	13 STEEL (2"_24")
STYLE 62 (2"_24")	415 STEEL (6"_48")
	433 CAST (2"_16")
	435 CAST (2"_12")

F. FLANGED ADAPTERS FOR JOINING PLAIN_END PIPE TO FLANGED PIPE, FITTINGS, VALVES AND EQUIPMENT.

DRESSER	ROCKWELL
STYLE 127 CAST (3"_12")	912 CAST (3"_12")
STYLE 128 STEEL (3"_48" C.I. PIPE)	913 STEEL (3" AND LARGER)
STYLE 128 STEEL (2"_96" STEEL PIPE)	

2.04 FLANGED JOINTS

A. FLANGED JOINTS SHALL BE AS SPECIFIED IN SECTION 02531 OF THESE SPECIFICATIONS. DIMENSIONS SHALL BE AS NOTED ON THE DRAWINGS.

2.05 PLUG VALVES

A. ALL PLUG VALVES SHALL BE ECCENTRIC PLUG VALVES UNLESS OTHERWISE SPECIFIED.

B. VALVES SHALL BE OF THE NON–LUBRICATED ECCENTRIC TYPE WITH RESILIENT FACED PLUGS AND SHALL BE FURNISHED WITH END CONNECTIONS AS SHOWN ON THE PLANS. FLANGED VALVES SHALL BE FACED AND DRILLED TO THE ANSI 125/150 LB. STANDARD. MECHANICAL JOINT ENDS SHALL BE TO THE AWWA STANDARD C111–64, GROOVED ENDS PER AWWA C–606–87. SCREWED ENDS SHALL BE TO THE NPT STANDARD.

C. VALVE BODIES SHALL BE OF ASTM A126 CLASS B CAST IRON. BODIES IN 4" AND LARGER VALVES SHALL BE FURNISHED WITH A 1/8" WELDED OVERLAY SEAT OF NOT LESS THAN 90% PURE NICKEL. SEAT AREA SHALL BE RAISED, WITH RAISED SURFACE COMPLETELY COVERED WITH WELD TO INSURE THAT THE PLUG FACE CONTACTS ONLY NICKEL. SCREWED–IN SEATS SHALL NOT BE ACCEPTABLE.

D. PLUGS SHALL BE OF ASTM A126 CLASS B CAST IRON. THE PLUG SHALL HAVE A CYLINDRICAL SEATING SURFACE ECCENTRICALLY OFFSET FROM THE CENTER OF THE PLUG SHAFT. THE INTERFERENCE BETWEEN THE PLUG FACE AND BODY SEAT, WITH THE PLUG IN THE CLOSED POSITION, SHALL BE EXTERNALLY ADJUSTABLE IN THE FIELD WITH THE VALVE IN THE LINE UNDER PRESSURE. PLUG SHALL BE RESILIENT FACED WITH NEOPRENE OR HYCAR, SUITABLE FOR USE WITH SEWAGE.

E. VALVES SHALL HAVE SLEEVE TYPE METAL BEARINGS AND SHALL BE OF SINTERED, OIL IMPREGNATED PERMANENTLY LUBRICATED TYPE 316 ASTM A743 GRADE CF–8M IN ½" SIZES. IN VALVES LARGER THAN 36", THE UPPER AND LOWER PLUG JOURNALS SHALL BE FITTED WITH ASTM A–240 TYPE 316 STAINLESS SLEEVES WITH BEARINGS OF ASTM B30, ALLOY C95400 ALUMINUM BRONZE. NON–METALLIC BEARINGS SHALL NOT BE ACCEPTABLE.

F. VALVE SHAFT SEALS SHALL BE OF THE MULTIPLE V–RING TYPE AND SHALL BE EXTERNALLY ADJUSTABLE AND REPACKABLE WITHOUT REMOVING THE BONNET OR ACTUATOR FROM THE VALVE UNDER PRESSURE. VALVES UTILIZING O–RING SEALS OR NON–ADJUSTABLE PACKING SHALL NOT BE ACCEPTABLE.

G. VALVE PRESSURE RATINGS SHALL BE 175 PSI THROUGH 12" AND 150 PSI FOR 14" THROUGH 72". EACH VALVE SHALL BE GIVEN A HYDROSTATIC AND SEAT TEST WITH TEST RESULTS BEING CERTIFIED WHEN REQUIRED BY THE SPECIFICATIONS.

811
Know what's below.
Call before you dig.
Within Indiana Call
811 or 800–382–5544
24 Hours a Day, 7 Days a Week.
PER INDIANA STATE LAW IC 8–1–26. IT IS AGAINST THE LAW TO EXCAVATE WITHOUT NOTIFYING THE UNDERGROUND LOCATION SERVICE TWO (2) WORKING DAYS BEFORE COMMENCING WORK.

10505 N. College Avenue
Indianapolis, Indiana 46280
weihe.net
317 | 846 - 6611
800 | 452 - 6408
317 | 843 - 0546 *fax*
ALLAN H. WEIHE, P.E., L.S. - FOUNDER
WEIHE ENGINEERS
Land Surveying | Civil Engineering
Landscape Architecture

PROJECT NO.: W12.0262
DWG NAME: 120262-C301 spec.dwg
DESIGNED BY: EAC/MG
DRAWN BY: EAC/MG
CHECKED BY: JKS
DATE: 06.29.2012

REVISIONS AND ISSUES	DATE	BY
50% CD SET	07/26/12	EAC/MG
REVISIONS PER WESTFIELD REVIEW	8/23/12	EAC

JAMES K. SHINNEMAN REGISTERED NO. 10200392 STATE OF INDIANA PROFESSIONAL ENGINEER
APPROVAL PENDING NOT FOR CONSTRUCTION

JAMES K. SHINNEMAN P.E. 10200392

PREPARED FOR:
EPIPHANY EVANGELICAL LUTHERAN CHURCH PHASE ONE
156TH AND DITCH ROAD, WESTFIELD IN
SPECIFICATIONS
Part of the SE Corner of SW/1/4 of Section 10, Township 18 North, Range 3 East, Washington Township, Hamilton County, Indiana

SHEET NO. C302
PROJECT NO. W12.0262

LOCATION: H:\2012\w120262\Engineering\design\conset\120262-C301 spec.dwg
LAYOUT: C302 – SPECS
DATE/TIME: August 24, 2012 – 12:09pm
PLOTTED BY: cartere

H. MANUAL VALVES SHALL HAVE LEVER OR GEAR ACTUATORS AND TEE WRENCHES, EXTENSION STEMS, FLOORSTANDS, ETC., AS INDICATED ON THE PLANS. ALL VALVES 6" AND LARGER SHALL BE EQUIPPED WITH GEAR ACTUATORS. ALL GEARING SHALL BE ENCLOSED IN A SEMI-STEEL HOUSING AND BE SUITABLE FOR RUNNING IN A LUBRICANT WITH SEALS PROVIDED ON ALL SHAFTS TO PREVENT ENTRY OF DIRT AND WATER INTO THE ACTUATOR. THE ACTUATOR SHAFT AND THE QUADRANT SHALL BE SUPPORTED ON PERMANENTLY LUBRICATED BRONZE BEARINGS. ACTUATORS SHALL CLEARLY INDICATE VALVE POSITION AND AN ADJUSTABLE STOP SHALL BE PROVIDED TO SET CLOSING TORQUE AND TO PROVIDE SEAT ADJUSTMENT TO COMPENSATE FOR CHANGE IN PRESSURE DIFFERENTIAL OR FLOW DIRECTION CHANGE. ALL EXPOSED NUTS, BOLTS AND WASHERS SHALL BE ZINC PLATED.

I. VALVES AND GEAR ACTUATORS FOR BURIED OR SUBMERGED SERVICE SHALL HAVE SEALS OR ALL SHAFTS AND GASKETS ON THE VALVE AND ACTUATOR COVERS TO PREVENT THE ENTRY OF WATER. ACTUATOR MOUNTING BRACKETS FOR BURIED OR SUBMERGED SERVICE SHALL BE TOTALLY ENCLOSED AND SHALL HAVE GASKET SEALS. ALL EXPOSED NUTS, BOLTS, SPRINGS AND WASHERS SHALL BE STAINLESS STEEL.

J. ACTUATORS SHALL BE EQUIPPED WITH AN OPERATING NUT TO ALLOW MANUAL VALVE OPERATION IN CASE OF SUPPLY FAILURE.

K. ALL VALVES AND ACTUATORS SHALL BE AS MANUFACTURED BY DEZURIK, PRATT, VAL-MATIC OR APPROVED EQUAL.

L. ALL BURIED SERVICE PLUG VALVES SHALL HAVE MECHANICAL JOINT ENDS, HAVE ALL EXTERIOR SURFACES SHOP PAINTED WITH TWO COATS OF FED. SPEC. TT-C-494A ASPHALT VARNISH WITH 2-INCH SQUARE NUT OPERATOR IN A VERTICAL POSITION FOR USE IN A VALVE BOX. PROVIDE NUT OPERATOR STEM EXTENSION FOR ALL PLUG VALVES BURIED DEEPER THAN 5 FEET, SUFFICIENT TO RAISE OPERATOR NUT TO WITHIN 3 FEET OF FINISHED GRADE.

2.06 VALVE BOXES

A. VALVE BOXES SHALL BE OF 6 INCH PVC PIPE WITH DROP COVER MARKED "SEWER". COVERS TO BE MANUFACTURED BY SIGMA CORPORATION (VB-2841S) OR APPROVED EQUAL. VALVE BOXES SHALL BE ACCURATELY CENTERED OVER VALVE OPERATING NUT, AND BACKFILL THOROUGHLY TAMPED ABOUT THEM. VALVE BOXES SHALL NOT REST ON THE VALVES BUT SHALL BE SUPPORTED ON BLOCKS AND CRUSHED STONE FILL. THEY SHALL BE SET VERTICALLY AND PROPERLY CUT AND/OR ADJUSTED SO THAT THE TOPS OF BOXES WILL BE GRADE IN ANY PAVING, WALK OR ROAD SURFACE, AND 2 TO 3 INCHES ABOVE FINISH GRADE IN GRASS PLOTS, FIELDS, WOODS OR OTHER OPEN TERRAIN. IN GRASS AREAS, MOUND AROUND VALVE BOX SO THERE IS A SLIGHT CROWN IN ALL DIRECTIONS TO SHED WATER.

2.07 SEWAGE COMBINATION AIR RELEASE VALVES

A. VALVES SHALL BE INSTALLED AT THE HIGH POINTS OF THE FORCE MAIN OR AT LOCATIONS SELECTED BY THE ENGINEER. THIS WILL PERMIT DISCHARGING THE SURGE OF AIR FROM AN EMPTY LINE WHEN FILLING AND RELIEVE THE VACUUM WHEN DRAINING THE SYSTEM. VALVE SHALL ALSO RELEASE AN ACCUMULATION OF AIR WHEN THE SYSTEM IS UNDER PRESSURE. THIS SHALL BE ACCOMPLISHED IN A SINGLE VALVE BODY.

B. THE VALVE SHALL OPERATE THROUGH A COMPOUND LEVER SYSTEM THAT WILL SEAL BOTH THE PRESSURE ORIFICE AND THE AIR AND VACUUM ORIFICE SIMULTANEOUSLY.

C. THE VALVE SHALL BE CONNECTED TO THE FORCEMAIN BY FLANGED DUCTILE IRON PIPE AND/OR FITTINGS AS SHOWN ON THE DRAWINGS. VALVES SHALL BE DESIGNED FOR WORKING PRESSURES BELOW 40 PSI. AN ISOLATION GATE VALVE OF THE SIZE INDICATED ON THE DRAWINGS SHALL BE FURNISHED AND INSTALLED BETWEEN THE VALVE AND MAIN CONNECTION.

C. VALVE BODY SHALL BE CAST IRON. THE INTERNAL LINKAGE AND FLOAT SHALL BE STAINLESS STEEL. THE VALVES SHALL BE 2" NPT SCREWED AS ANSI CLASS 125 FLANGED INLET CONNECTION.

D. VALVES SHALL BE SUPPLIED WITH BACKFLUSHING ATTACHMENTS SO THAT THE INTERIOR BODY CAN BE FLUSHED PERIODICALLY FOR PROPER OPERATION AND A "PROTECTOP" TO PREVENT DIRT AND DEBRIS FROM ENTERING THE OUTLET OF THE VALVE.

F. SEWAGE AIR/VACUUM RELEASE VALVES SHALL BE A.R.I. D-025 AS MANUFACTURED BY A.R.I.FLOW CONTROL ACCESSORIES, KIBBUTZ KFAR CHARVV, ISRAEL OR APPROVED EQUAL.

2.08 CONCRETE PIPE ANCHORS, THRUST BLOCKS, CRADLE OR ENCASEMENT

A. WHERE INDICATED ON THE DRAWINGS, REQUIRED BY THE SPECIFICATIONS OR AS DIRECTED BY THE ENGINEER, CONCRETE PIPE ANCHORS, THRUST BLOCKS, CRADLES OR ENCASEMENTS SHALL BE INSTALLED. CONCRETE SHALL BE 2000 PSI, AND REINFORCING BARS SHALL BE AS INSTALLED AS INDICATED ON THE DETAILS.

2.09 CURB STOP ASSEMBLY

A. BRASS COMPONENTS: ALL BRASS VALVE AND FITTING COMPONENTS ARE TO MEET ASTM SPECIFICATION B62-63-B505Q AND THE AWWA STANDARD C800 AND CONFORM TO ANSI B16.26. COMPONENTS SHALL BE MADE FROM BRASS ALLOY CDA 89520. ALL BRASS COMPONENTS SHALL BE INDIVIDUALLY TESTED WITH INTERNAL AIR PRESSURE OF 150 MIN. PSI.

B. ALL PIPE CONNECTIONS SHALL BE MADE USING PACK JOINT CONNECTIONS INCLUDING A BUNA-N BEVELED GASKET FOR SEALING TO THE OUTSIDE DIAMETER OF THE PIPE. A SPLIT CLAMP LOCKING DEVICE WITH STAINLESS STEEL HARDWARE SHALL BE INTEGRATED INTO ALL CONNECTION FITTINGS TO SECURELY RESTRAIN THE PIPE FROM HYDRAULIC PRESSURE AND EXTERNAL LOADING CAUSED BY SHIFTING AND SETTLING. STAINLESS STEEL INSERT STIFFENERS SHALL BE PROVIDED FOR ALL PACK JOINT CONNECTION FITTINGS TO BE USED WITH HDPE PIPE.

C. BRASS VALVES SHALL BE PRESSURE TIGHT IN BOTH DIRECTIONS WITH INTEGRAL STOPS AT THE FULLY-CLOSED AND FULLY-OPEN POSITIONS. THE TEE-HEAD AND STEM SHALL BE CONSTRUCTED OF A SINGLE, SOLID PIECE TO ASSURE RELIABLE OPERATION. THE STEM SHALL BE SECURED INTO THE VALVE BODY USING EITHER A BRONZE OR PLASTIC RING. BUNA-N O-RINGS SHALL BE USED TO PROVIDE A REDUNDANT, WATERTIGHT SEAL ON THE STEM. A SPHERICAL, FLUOROCARBON-COATED BRASS BALL SHALL BE SUPPORTED IN MOLDED, BUNA-N RUBBER SEATS TO PROVIDE WATERTIGHT SEALS IN EITHER DIRECTION, AS WELL AS MAXIMUM FLOW CAPACITY AND EASE OF OPERATION. VALVES SHALL BE DESIGNED TO WITHSTAND A WORKING PRESSURE OF 150 PSI MINIMUM.

D. CHECK VALVES: CHECK VALVES SHALL BE INJECTION MOLDED FROM NON-CORRODING, GLASS FIBER REINFORCED PVC FOR DURABILITY. THE CHECK VALVE FLAPPER SHALL INCLUDE A NON-FOULING, INTEGRAL HINGE MADE FROM FABRIC REINFORCED SYNTHETIC ELASTOMER TO ASSURE CORROSION RESISTANCE, DIMENSIONAL STABILITY, FATIGUE STRENGTH AND TROUBLE FREE OPERATION. THE CHECK VALVE WILL PROVIDE A FULL-PORTED PASSAGEWAY AND SHALL INTRODUCE A FRICTION LOSS OF LESS THAN 6 INCHES OF WATER AT MAXIMUM RATED FLOW. A NONMETALLIC HINGE SHALL BE AN INTEGRAL PART OF THE FLAPPER ASSEMBLY PROVIDING A MAXIMUM DEGREE OF FREEDOM TO ASSURE SEATING AT LOW BACK PRESSURE.

E. CURB BOXES SHALL BE CONSTRUCTED OF CAST IRON AND STEEL PIPE. ALL COMPONENTS SHALL BE HEAVILY COATED WITH ASPHALT PAINT TO ASSURE DURABILITY IN THE GROUND. CURB BOXES SHALL PROVIDE 12" OF HEIGHT ADJUSTMENT DOWNWARD (SHORTER) FROM THEIR EXTENDED HEIGHT.

F. THE VALVE SHALL OPERATE THROUGH A COMPOUND LEVER SYSTEM THAT WILL SEAL BOTH THE PRESSURE ORIFICE AND THE AIR AND VACUUM ORIFICE SIMULTANEOUSLY.

2.10 FLUSHING STATION

A. FLUSHING STATIONS SHALL BE CONSTRUCTED OF POLYETHYLENE AND 20" MIN. DIAMETER. FRAMES AND COVERS SHALL BE CAST IRON AND LABELED "SEWER" AND BE THE "DROP-IN" TYPE. LOCKING COVERS ARE NOT PERMITTED. FLUSHING STATIONS SHALL BE INSTALLED WITHIN THE RIGHT-OF-WAY OR EASEMENT LINE. FLUSHING STATIONS SHALL BE INSTALLED VERTICALLY AND SHALL BE PERFECTLY CENTER OVER THE 3" CAM-LOCK. FLUSHING STATIONS SHALL NEVER BE INSTALLED IN ANY SIDEWALK, OR IN A DRIVEWAY IN THE AREA WHERE THE PUBLIC SIDEWALK CROSSES THE DRIVEWAY. FLUSHING STATIONS SHALL BE INSTALLED SUCH THAT THE TOP OF THE BOX IS FLUSH WITH THE DIRT SURFACE. FLUSHING STATIONS SHALL NEVER POSE A TRIP HAZARD OR POSE A POTENTIAL THREAT OF DAMAGE TO LAWN MOWERS. THE CAST IRON FRAME SHALL BE CENTERED ON THE BOX.

PART 3 - EXECUTION

3.01 INSTALLATION OF VALVES AND FITTINGS

A. ALL VALVES SHALL BE INSTALLED IN ACCORDANCE WITH DETAILS ON THE CONTRACT DRAWINGS AND WITH THE MANUFACTURER'S RECOMMENDATIONS.

B. ALL VALVES SHALL BE ANCHORED IN ACCORDANCE WITH THE DETAILS ON THE CONTRACT DRAWINGS.

3.02 PIPELINE INSTALLATION

A. UNLESS OTHERWISE DIRECTED BY THE ENGINEER, ALL PIPES ARE TO BE DIRECTIONALLY DRILLED. THE REQUIREMENT FOR THIS INSTALLATION SHALL BE IN COMPLIANCE WITH SECTION 02420.

3.03 BACKFILLING OF EXCAVATION PITS

A. BACKFILLING OF PIPELINE TRENCHES SHALL BE ACCOMPLISHED WITH THE REQUIREMENTS SET FORTH IN "EARTHWORK" SECTION 02300 AS SHOWN ON THE DRAWINGS AND WITH DETAILS SET FORTH HEREINAFTER.

B. METHOD "A" - BACKFILLING IN OPEN TERRAIN:

BACKFILLING OF PIPELINE TRENCHES IN OPEN TERRAIN SHALL BE ACCOMPLISHED IN THE FOLLOWING MANNER:

1. THE PRIMARY BACKFILL SHALL BE AS SPECIFIED IN PARAGRAPH 3.02 "PIPE BEDDING". THIS MATERIAL SHALL BE PLACED IN A MANNER APPROVED BY THE ENGINEER, AND SHALL BE CAREFULLY COMPACTED TO AVOID DISPLACEMENT OF THE PIPE. COMPACTION SHALL BE ACCOMPLISHED BY HAND-TAMPING OR BY APPROVED MECHANICAL METHODS.

2. THE SECONDARY BACKFILL (UPPER PORTION OF THE TRENCH ABOVE THE PRIMARY BACKFILL) SHALL BE BACKFILLED WITH MATERIAL THAT IS FREE FROM LARGE ROCK (COMMON FILL). INCORPORATION OF ROCK HAVING A VOLUME EXCEEDING ONE-HALF CUBIC FOOT IS PROHIBITED. BACKFILLING THIS PORTION OF THE TRENCH MAY BE ACCOMPLISHED BY ANY MEANS APPROVED BY THE ENGINEER. THE TRENCH BACKFILL SHALL BE HEAPED OVER OR LEVELED AS DIRECTED BY THE ENGINEER.

C. METHOD "B" - BACKFILLING STONE DRIVEWAYS AND STREET REPAIR:

BACKFILLING OF PIPELINE TRENCHES UNDER STONE DRIVEWAYS STREET REPAIRS SHALL BE ACCOMPLISHED IN THE FOLLOWING MANNER.

1. THE PRIMARY BACKFILL SHALL BE AS SPECIFIED IN PARAGRAPH 3.02 "PIPE BEDDING". THIS MATERIAL SHALL BE PLACED IN A MANNER APPROVED BY THE ENGINEER, AND SHALL BE CAREFULLY COMPACTED TO AVOID DISPLACEMENT OF THE PIPE. COMPACTION SHALL BE ACCOMPLISHED BY HAND-TAMPING OR BY APPROVED MECHANICAL METHODS.

2. THE SECONDARY BACKFILL (UPPER PORTION OF THE TRENCH ABOVE THE PRIMARY BACKFILL) TO A POINT 6" BELOW THE GRADE LINE, SHALL BE BACKFILLED WITH CLEAN GRANULAR MATERIAL PER REQUIREMENTS OF INDIANA DEPARTMENT OF TRANSPORTATION FOR STRUCTURAL FILL. MATERIAL SHALL BE COMPACTED AS SET FORTH IN DIVISION 2300: EARTHWORK SECTION 3.06: COMPACTION OR AS DIRECTED BY THE ENGINEER.

3. THE UPPER PORTION OF THE TRENCH FROM THE TOP OF THE SECONDARY BACKFILL TO THE EXISTING GRADE LINE SHALL BE BACKFILLED AND MAINTAINED WITH NO. 53 STONE. UNTIL FINAL ACCEPTANCE OF THE WORK.

D. METHOD "C" - BACKFILLING UNDER PAVED DRIVEWAYS:

BACKFILLING OF PIPELINE TRENCHES UNDER PAVED DRIVEWAYS SHALL BE ACCOMPLISHED IN THE FOLLOWING MANNER:

1. THE PRIMARY BACKFILL SHALL BE AS SPECIFIED IN PARAGRAPH 3.02 "PIPE BEDDING". THIS MATERIAL SHALL BE PLACED IN A MANNER APPROVED BY THE ENGINEER, AND SHALL BE CAREFULLY COMPACTED TO AVOID DISPLACEMENT OF THE PIPE. COMPACTION SHALL BE ACCOMPLISHED BY HAND-TAMPING OR BY APPROVED MECHANICAL METHODS.

2. THE SECONDARY BACKFILL (UPPER PORTION OF THE TRENCH ABOVE THE PRIMARY BACKFILL) TO A POINT MINIMUM 8 ½" BELOW THE EXISTING GRADE LINE FOR ASPHALT DRIVEWAYS AND MINIMUM 10" BELOW THE GRADE LINE FOR CONCRETE DRIVEWAYS, SHALL BE BACKFILLED WITH CLEAN GRANULAR MATERIAL PER REQUIREMENTS OF INDIANA DEPARTMENT OF TRANSPORTATION FOR STRUCTURAL FILL. MATERIAL SHALL BE COMPACTED AS SET FORTH IN SECTION 2300: EARTHWORK SECTION 3.06: COMPACTION OR AS DIRECTED BY THE ENGINEER.

3. THE UPPER PORTION OF THE TRENCH FROM THE TOP OF THE SECONDARY BACKFILL, SHALL BE BACKFILLED WITH A BASE COURSE OF DENSE GRADED AGGREGATE. AT SUCH TIME THAT PAVEMENT REPLACEMENT IS ACCOMPLISHED, THE EXCESS BASE COURSE SHALL BE REMOVED AS REQUIRED.

E. METHOD "D" - BACKFILLING UNDER ASPHALT ROADS

BACKFILLING OF PIPELINE TRENCHES UNDER ASPHALT ROADS SHALL BE ACCOMPLISHED IN THE FOLLOWING MANNER:

1. THE PRIMARY BACKFILL SHALL BE AS SPECIFIED IN PARAGRAPH 3.02 "PIPE BEDDING". THIS MATERIAL SHALL BE PLACED IN A MANNER APPROVED BY THE ENGINEER, AND SHALL BE CAREFULLY COMPACTED TO AVOID DISPLACEMENT OF THE PIPE. COMPACTION SHALL BE ACCOMPLISHED BY HAND-TAMPING OR BY APPROVED MECHANICAL METHODS.

2. THE SECONDARY BACKFILL (UPPER PORTION OF THE TRENCH ABOVE THE PRIMARY BACKFILL) TO A POINT MINIMUM 7" BELOW BOTTOM OF EXISTING GRADE LINE FOR ASPHALT ROADS, SHALL BE BACKFILLED WITH CLEAN GRANULAR MATERIAL PER REQUIREMENTS OF INDIANA DEPARTMENT OF TRANSPORTATION FOR STRUCTURAL FILL. MATERIAL SHALL BE COMPACTED AS SET FORTH IN DIVISION 2300: EARTHWORK SECTION 3.06: COMPACTION OR AS DIRECTED BY THE ENGINEER.

3. THE UPPER PORTION OF THE TRENCH FROM THE TOP OF THE SECONDARY BACKFILL, SHALL BE BACKFILLED WITH A BASE COURSE OF DENSE GRADED AGGREGATE. AT SUCH TIME THAT PAVEMENT REPLACEMENT IS ACCOMPLISHED, THE EXCESS BASE COURSE SHALL BE REMOVED AS REQUIRED.

F. METHOD "E" - BACKFILLING UNDER CONCRETE DRIVEWAYS AND SIDEWALKS:

BACKFILLING OF PIPELINE TRENCHES UNDER CONCRETE DRIVEWAYS AND SIDEWALKS SHALL BE ACCOMPLISHED IN THE FOLLOWING MANNER:

1. THE PRIMARY BACKFILL SHALL BE AS SPECIFIED IN PARAGRAPH 3.02 "PIPE BEDDING". THIS MATERIAL SHALL BE PLACED IN A MANNER APPROVED BY THE ENGINEER, AND SHALL BE CAREFULLY COMPACTED TO AVOID DISPLACEMENT OF THE PIPE. COMPACTION SHALL BE ACCOMPLISHED BY HAND-TAMPING OR BY APPROVED MECHANICAL METHODS.

2. THE SECONDARY BACKFILL (UPPER PORTION OF THE TRENCH ABOVE THE PRIMARY BACKFILL) TO A POINT MINIMUM 10" BELOW THE GRADE LINE FOR CONCRETE DRIVEWAYS AND MINIMUM 8" BELOW THE GRADE LINE FOR CONCRETE SIDEWALKS, SHALL BE BACKFILLED WITH CLEAN GRANULAR MATERIAL PER REQUIREMENTS OF INDIANA DEPARTMENT OF TRANSPORTATION FOR STRUCTURAL FILL. MATERIAL SHALL BE COMPACTED AS SET FORTH IN SECTION 2300: EARTHWORK SECTION 3.06: COMPACTION OR AS DIRECTED BY THE ENGINEER.

3. THE UPPER PORTION OF THE TRENCH FROM THE TOP OF THE SECONDARY BACKFILL, SHALL BE BACKFILLED WITH A BASE COURSE OF DENSE GRADED AGGREGATE. AT SUCH TIME THAT PAVEMENT REPLACEMENT IS ACCOMPLISHED, THE EXCESS BASE COURSE SHALL BE REMOVED AS REQUIRED.

C. BEFORE FINAL ACCEPTANCE, THE CONTRACTOR WILL BE REQUIRED TO LEVEL OFF ALL TRENCHES OR TO BRING THE TRENCH UP TO GRADE. THE CONTRACTOR SHALL ALSO REMOVE FROM ROADWAYS, RIGHTS-OF-WAYS AND/OR PRIVATE PROPERTY ALL EXCESS EARTH OR OTHER MATERIALS RESULTING FROM CONSTRUCTION.

D. IN THE EVENT THAT PAVEMENT IS NOT PLACED IMMEDIATELY FOLLOWING TRENCH BACKFILLING IN STREETS AND HIGHWAYS, THE CONTRACTOR SHALL BE RESPONSIBLE FOR MAINTAINING THE TRENCH SURFACE IN A LEVEL CONDITION AT PROPER PAVEMENT GRADE AT ALL TIMES.

3.07 SETTLEMENT OF TRENCHES

A. WHENEVER LINES ARE IN, OR CROSS, DRIVEWAYS AND STREETS, THE CONTRACTOR SHALL BE RESPONSIBLE FOR ANY TRENCH SETTLEMENT WHICH OCCURS WITHIN THESE RIGHTS-OF-WAY WITHIN THREE YEARS FROM THE TIME OF FINAL ACCEPTANCE OF THE WORK. IF PAVING SHALL REQUIRE REPLACEMENT BECAUSE OF TRENCH SETTLEMENT WITHIN THIS TIME, IT SHALL BE REPLACED BY THE CONTRACTOR AT NO EXTRA COST TO THE OWNER. REPAIR OF SETTLEMENT DAMAGE SHALL MEET THE APPROVAL OF THE OWNER AND/OR THE COUNTY.

3.08 CONCRETE THRUST BLOCKS, CRADLE, ANCHORS OR ENCASEMENT

A. CONCRETE THRUST BLOCKS, CRADLE, ANCHORS OR ENCASEMENT SHALL BE PLACED WHERE SHOWN ON THE DRAWINGS, REQUIRED BY THE SPECIFICATIONS, OR AS DIRECTED BY THE ENGINEER.

B. FOR CRADLE AND ENCASEMENT, CONCRETE SHALL BE 2000 PSI AND SHALL BE MIXED SUFFICIENTLY WET TO PERMIT IT TO FLOW UNDER THE PIPE TO FORM A CONTINUOUS BED.

C. FOR THRUST BLOCKS AND ANCHORS, CONCRETE SHALL BE 2000 PSI, AND SHALL BE FORMED OR BE SUFFICIENTLY STIFF TO MAINTAIN THE FORMS INDICATED ON THE DETAILS.

D. WHEN TAMPING CONCRETE, CARE SHALL BE TAKEN NOT TO DISTURB THE GRADE OR LINE OF THE PIPE OR INJURE THE JOINTS. CONCRETE PLACED OUTSIDE THE SPECIFIED LIMITS OR WITHOUT AUTHORIZATION FROM THE ENGINEER WILL NOT BE SUBJECT TO PAYMENT.

3.09 REPLACEMENT OF EXISTING MAIL BOXES, CULVERTS, CLOTHES LINE POSTS, FENCES, IRRIGATION, ELECTRIC FENCES, AND OTHER SUCH FACILITIES

A. EXISTING MAIL BOXES, DRAINAGE CULVERTS, CLOTHES LINE POSTS, FENCES AND THE LIKE SHALL NOT BE DAMAGED OR DISTURBED UNLESS NECESSARY, IN WHICH CASE, THEY SHALL BE REPLACED IN AS GOOD CONDITION AS FOUND OR BETTER AS QUICKLY AS POSSIBLE. EXISTING MATERIALS SHALL BE REUSED IN REPLACING SUCH FACILITIES WHEN MATERIALS HAVE NOT BEEN DAMAGED BY THE CONTRACTOR'S OPERATIONS. EXISTING FACILITIES DAMAGED BY CONTRACTOR'S OPERATION SHALL BE REPLACED WITH NEW MATERIALS OF THE SAME TYPE AT THE CONTRACTOR'S EXPENSE. WORK IN THIS CATEGORY IS NOT A PAY ITEM.

B. REPLACEMENT OF PAVED DRAINAGE DITCHES WITHIN HIGHWAY RIGHT-OF-WAY SHALL BE ACCOMPLISHED IN ACCORDANCE WITH INDIANA DEPARTMENT OF TRANSPORTATION STANDARD SPECIFICATIONS.

3.10 CURB STOP ASSEMBLY

A. THE TRENCH AND TRENCH BOTTOM SHOULD BE CONSTRUCTED IN ACCORDANCE WITH ASTM D 2321 - SECTION 7. EMBEDMENT MATERIALS SHOULD BE CLASS I, CLASS II OR CLASS III MATERIALS AS DEFINED IN ASTM D 2321 - SECTION 6. THE USE OF CLASS IV AND/OR CLASS V MATERIALS FOR EMBEDMENT IS NOT RECOMMENDED AND SHOULD BE ALLOWED ONLY WITH THE APPROVAL OF THE ENGINEER. BEDDING OF THE PIPE SHOULD BE PERFORMED IN ACCORDANCE WITH ASTM D 2321 - SECTION 8. COMPACTION SHOULD BE AS SPECIFIED IN ASTM D 2321. DEVIATIONS FROM THE SPECIFIED COMPACTION SHALL BE APPROVED BY THE ENGINEER.

B. HAUNCHING AND INITIAL BACKFILL SHOULD BE AS SPECIFIED IN ASTM D 2321 - SECTION 9 USING CLASS I, CLASS II OR CLASS III MATERIALS. MATERIALS USED AND COMPACTION SHALL BE AS SPECIFIED BY THE ENGINEER. IN CASES WHERE A COMPACTION OF 85 PERCENT STANDARD PROCTOR DENSITY IS NOT ATTAINABLE, THE ENGINEER MAY WISH TO INCREASE THE SDR OF THE PIPE TO PROVIDE ADEQUATE STIFFNESS. ASTM D 2321 - SECTION 11.2, MINIMUM COVER FOR LOAD APPLICATION, SECTION 11.3, USE OF COMPACTION EQUIPMENT AND SECTION 11.4, REMOVAL OF TRENCH PROTECTION, SHOULD APPLY UNLESS DIRECTED OTHERWISE BY THE ENGINEER.

3.11 TESTING

A. ALL PRESSURE PIPING (LINES NOT LAID TO GRADE) SHALL BE GIVEN A HYDROSTATIC TEST TO THE RATED WORKING PRESSURE OF THE PIPE, UNDER WHICH LEAKAGE SHALL NOT EXCEED 10 GALLONS PER 24 HOURS PER INCH OF DIAMETER PER MILE OF PIPE. LOSS OF WATER PRESSURE DURING TEST SHALL NOT EXCEED 10 PSI IN A 24 HOUR PERIOD, 5PSI IN A 10 HOUR PERIOD OR, 0 PSI IN A 4 HOUR PERIOD. TESTING SHALL BE IN ACCORDANCE WITH AWWA STANDARD C605-94.

B. LEAKAGE IN PIPELINES, WHEN TESTED UNDER PRESSURE OF 50 PSI EXCESS OF NORMAL OPERATING PRESSURE, SHALL NOT EXCEED 10 GALLONS PER 24 HOURS PER INCH OF DIAMETER PER MILE OF PIPE.

C. CONTRACTOR SHALL FURNISH A RECORDING GAUGE AND WATER METER FOR MEASURING WATER USED DURING LEAKAGE TEST AND RECORDING PRESSURE CHARTS DURING DURATION OF TEST. RECORDING PRESSURE CHARTS SHALL BE TURNED OVER TO THE ENGINEER AT CONCLUSION OF TESTS. THE PRESSURE RECORDING DEVICE SHALL BE SUITABLE FOR OUTSIDE SERVICE, WITH A RANGE FROM 0_200 PSIG, 24_ HOUR SPRING WOUND CLOCK, DESIGNED FOR 9_INCH CHARTS, AND SHALL BE APPROVED BY THE ENGINEER. FOR CONTRACTOR'S INFORMATION ONLY, SUCH PRESSURE RECORDING DEVICES MAY BE AVAILABLE FROM THE FOXBORO COMPANY, FOXBORO, MASSACHUSETTS; BRISTOL DIVISION OF ACCO, WATERBURY, CONNECTICUT; OR WEKSLER INSTRUMENTS CORPORATION, FREEPORT, NEW YORK.

D. PIPELINES SHALL BE TESTED BEFORE BACKFILLING AT JOINTS EXCEPT WHERE OTHERWISE REQUIRED BY NECESSITY OR CONVENIENCE.

E. DURATION OF TEST SHALL BE NOT LESS THAN FOUR (4) HOURS WHERE JOINTS ARE EXPOSED AND NOT LESS THAN 24 HOURS WHERE JOINTS ARE COVERED.

F. WHERE LEAKS ARE VISIBLE AT EXPOSED JOINTS AND/OR EVIDENT ON THE SURFACE WHERE JOINTS ARE COVERED, THE JOINTS SHALL BE LAID AND LEAKAGE MUST BE MINIMIZED, REGARDLESS OF TOTAL LEAKAGE AS SHOWN BY TEST.

G. ALL PIPE, FITTINGS, VALVES, AND OTHER MATERIALS FOUND TO BE DEFECTIVE UNDER TEST SHALL BE REMOVED AND REPLACED AT NO ADDITIONAL EXPENSE TO THE OWNER.

H. LINES WHICH FAIL TO MEET TESTS SHALL BE REPAIRED AND RETESTED AS NECESSARY UNTIL TEST REQUIREMENTS ARE COMPLIED WITH.

I. WHERE NONMETALLIC JOINT COMPOUNDS ARE USED, PIPELINES SHOULD BE HELD UNDER NORMAL OPERATING PRESSURE FOR AT LEAST THREE DAYS BEFORE TESTING.

J. THE OWNER WILL PROVIDE INITIAL WATER FOR TESTING THE PRESSURE PIPING. SHOULD THE FIRST TEST FAIL TO PASS, ALL ADDITIONAL WATER REQUIRED FOR SUBSEQUENT TESTS SHALL BE FURNISHED AT THE CONTRACTOR'S EXPENSE.

K. THE COST OF TESTING OF PRESSURE PIPING IS INCIDENTAL AND IS TO BE INCLUDED IN THE CONTRACTOR'S UNIT CONTRACT PRICE.

3.12 TESTING OF HDPE PIPE

A. ALL NEW HDPE SANITARY SEWER FORCEMAINS SHALL BE HYDROSTATIC TESTED IN A TWO STEP PROCESS TO ENSURE WATER TIGHTNESS AND INTEGRITY. THE CONTRACTOR SHALL FURNISH A RECORDING GAUGE AND WATER METER FOR MEASURING WATER USED DURING LEAKAGE TEST AND RECORDING PRESSURE CHARTS DURING DURATION OF TEST. RECORDING PRESSURE CHARTS SHALL BE TURNED OVER TO THE ENGINEER AT CONCLUSION OF TEST. THE PRESSURE RECORDING DEVICE SHALL BE SUITABLE FOR OUTSIDE SERVICE, WITH A RANGE FROM 0-200 PSIG, 24-HOUR SPRING WOUND CLOCK, DESIGNED FOR 9" CHARTS, AND SHALL BE APPROVED BY THE ENGINEER. PRESSURE PIPE TEST SECTIONS SHALL NOT EXCEED 1,250 LINEAR FEET OF PIPE UNLESS APPROVED BY THE ENGINEER. THE PROCEDURE FOR TESTING SHALL BE APPROVED BY THE ENGINEER AND IN ACCORDANCE WITH THE FOLLOWING STEPS:

1. INITIAL EXPANSION

a. FILL THE TEST SECTION WITH WATER AND REMOVE ALL AIR FROM THE LINE AND SERVICE LATERALS.

b. PRESSURIZE THE TEST SECTION AT A STEAD RATE TO 1.5 THE RATED OPERATING PRESSURE OF THE PIPE. THE TEST PRESSURE SHOULD NOT EXCEED 1.5 TIMES THE RATED OPERATING PRESSURE OF THE PIPE OR THE LOWEST RATED COMPONENT IN THE SYSTEM. PRESSURE READINGS SHALL BE MEASURED AS CLOSE AS POSSIBLE TO THE LOWEST POINT OF THE LINE.

c. THE PIPE TEST SECTION SHALL BE ALLOWED TO STAND FOR 3 HOURS TO ALLOW FOR EXPANSION OF THE PIPE. MAKE-UP WATER SHOULD BE ADDED TO THE SYSTEM AT HOURLY INTERVALS TO RETURN THE TEST SECTION TO THE TEST PRESSURE.

d. AFTER EQUILIBRIUM IS ESTABLISHED WITHIN THE PIPE TEST SECTION, BEGIN THE FINAL HYDROSTATIC TEST.

2. TEST PHASE

a. AT THE END OF THE THIRD HOUR, MAKE-UP WATER SHOULD BE ADDED TO THE SYSTEM AND THE TEST SECTION IS PRESSURIZED TO 1.5 TIMES THE RATED OPERATING PRESSURE OF THE PIPE OR THE LOWEST RATED COMPONENT IN THE SYSTEM. THE FINAL TEST BEGINS WHEN THE PRESSURE PUMP SYSTEM IS TURNED OFF. THE FINAL TEST SHALL BE HELD FOR 2 HOURS.

b. DURING THE FINAL TEST PERIOD, A MEASURED AMOUNT OF MAKE-UP WATER SHOULD BE ADDED TO RETURN TO THE TEST PRESSURE AT HOURLY INTERVALS. THE AMOUNT OF MAKE-UP WATER SHALL NOT EXCEED THE ALLOWANCE GIVEN IN THE BELOW TABLE.

ALLOWANCE FOR EXPANSION OF HDPE PIPE*
(U.S. GALLONS/100 FEET OF PIPE)

c. IF THERE ARE NO VISUAL LEAKS OR SIGNIFICANT PRESSURE DROPS DURING THE FINAL TEST PERIOD, THE PIPELINE PASSES THE TEST. IF ANY DEFECTS OR LEAKS ARE REVEALED, THEY SHOULD BE RECTIFIED/CORRECTED AND THE PIPELINE RE-TESTED AFTER A 24-HOUR RECUPERATION PERIOD. UNDER NO CIRCUMSTANCES SHALL THE TOTAL TIME UNDER TEST EXCEED EIGHT (8) HOURS AT 1 ½ TIMES THE PRESSURE RATING.

AS AN ALTERNATIVE TO THE ABOVE TEST METHOD, THE FOLLOWING TEST METHOD MAY BE USED:

1. INITIAL EXPANSION

a. FILL THE TEST SECTION WITH WATER AND REMOVE ALL AIR FROM THE LINE AND SERVICE LATERALS.

b. PRESSURIZE THE TEST SECTION AT A STEAD RATE TO 1.5 THE RATED OPERATING PRESSURE OF THE PIPE. THE TEST PRESSURE SHOULD NOT EXCEED 1.5 TIMES THE RATED OPERATING PRESSURE OF THE PIPE OR THE LOWEST RATED COMPONENT IN THE SYSTEM. PRESSURE READINGS SHALL BE MEASURED AS CLOSE AS POSSIBLE TO THE LOWEST POINT OF THE LINE.

c. THE PIPE TEST SECTION SHALL BE ALLOWED TO STAND FOR 4 HOURS TO ALLOW FOR EXPANSION OF THE PIPE. MAKE-UP WATER SHOULD BE ADDED TO THE SYSTEM AT HOURLY INTERVALS TO RETURN THE TEST SECTION TO THE TEST PRESSURE.

d. AFTER EQUILIBRIUM IS ESTABLISHED WITHIN THE PIPE TEST SECTION, BEGIN THE FINAL HYDROSTATIC TEST.

2. TEST PHASE

a. AT THE END OF THE FOURTH HOUR, MAKE-UP WATER SHOULD BE ADDED TO THE SYSTEM TO RETURN THE TEST SECTION TO THE INITIAL EXPANSION PRESSURE.

b. THE EXPANSION PRESSURE HELD FOR THE FOUR HOURS IS THEN REDUCED BY 10 PSI AND HELD FOR ONE (1) HOUR. IF THE PRESSURE REMAINS STEADY (WITHIN 5% OF THE REDUCED PRESSURE) FOR AN HOUR, NO LEAKAGE IS INDICATED AND THE PIPELINE PASSES THE TEST.

c. IF ANY DEFECTS OR LEAKS ARE REVEALED, THEY SHOULD BE RECTIFIED/CORRECTED AND THE PIPELINE RE-TESTED AFTER A 24-HOUR RECUPERATION PERIOD. UNDER NO CIRCUMSTANCES SHALL THE TOTAL TIME UNDER TEST EXCEED EIGHT (8) HOURS AT 1 ½ TIMES THE PRESSURE RATING.

d. THE ENGINEER SHALL WITNESS ALL TESTS. ALL EQUIPMENT USED SHALL BE SPECIFICALLY DESIGNED FOR THE PURPOSE OF FORCEMAIN TESTING. IF A TEST FAILS, CORRECTIONS SHALL BE MADE AND THE LINE SHALL BE RETESTED UNTIL A SATISFACTORY TEST IS ACHIEVED. ALL PIPE, FITTINGS AND OTHER MATERIALS FOUND TO BE DEFECTIVE UNDER TESTING SHALL BE REMOVED AND REPLACED AT NO ADDITIONAL EXPENSE TO THE OWNER. NO FORCEMAIN SHALL BE PLACED INTO SERVICE OR ACCEPTED BY THE OWNER UNTIL IT HAS PASSED THE TESTING REQUIREMENT. ADDITIONAL INFORMATION CONCERNING THE ABOVE TESTING PROCEDURES FOR HYDROSTATIC TESTING OF HDPE PRESSURE PIPELINES IS AVAILABLE THROUGH THE PLASTICS PIPE INSTITUTE (PPI) TECHNICAL REPORT #31 (TR-31). IN ADDITION, ALL FIELD TESTING PROCEDURES SHALL BE APPROVED BY THE MANUFACTURE(S) OF THE PRODUCTS BEING TESTED.

3.13 CLEAN UP

A. UPON COMPLETION OF INSTALLATION OF THE PIPING AND APPURTENANCES, THE CONTRACTOR SHALL REMOVE ALL DEBRIS AND SURPLUS CONSTRUCTION MATERIALS RESULTING FROM THE WORK. THE CONTRACTOR SHALL GRADE THE GROUND ALONG EACH SIDE OF PIPE TRENCHES IN A UNIFORM AND NEAT MANNER LEAVING THE CONSTRUCTION AREA IN A SHAPE AS NEAR AS POSSIBLE TO THE ORIGINAL GROUND LINE.

END OF SECTION

811
Know what's below.
Call before you dig.
Within Indiana Call
811 or 800-382-5544
24 Hours a Day, 7 Days a Week.
PER INDIANA STATE LAW IC 8-1-26. IT IS AGAINST THE LAW TO EXCAVATE WITHOUT NOTIFYING THE UNDERGROUND LOCATION SERVICE TWO (2) WORKING DAYS BEFORE COMMENCING WORK.

10505 N. College Avenue
Indianapolis, Indiana 46280
weihe.net
317 | 846 - 6611
800 | 452 - 6408
317 | 843 - 0546 fax
ALLAN H. WEIHE, P.E., L.S. - FOUNDER

WEIHE ENGINEERS
Land Surveying | Civil Engineering
Landscape Architecture

PROJECT NO.: W12.0262
DWG NAME: 120262-C301 spec.dwg
DESIGNED BY: EAC/MG
DRAWN BY: EAC/MG
CHECKED BY: JKS
DATE: 06.29.2012

REVISIONS AND ISSUES	DATE	BY
50% CD SET	07/26/12	EAC/MG
REVISIONS PER WESTFIELD REVIEW	8/23/12	EAC

JAMES K. SHINNEMAN REGISTERED No. 10200392 STATE OF INDIANA PROFESSIONAL ENGINEER
APPROVAL PENDING NOT FOR CONSTRUCTION

JAMES K. SHINNEMAN P.E. 10200392

PREPARED FOR:
EPIPHANY EVANGELICAL LUTHERAN CHURCH PHASE ONE
156TH AND DITCH ROAD, WESTFIELD IN
SPECIFICATIONS
Part of the SE Corner of SW/1/4 of Section 10, Township 18 North, Range 3 East, Washington Township, Hamilton County, Indiana

SHEET NO.
C303
PROJECT NO.
W12.0262

LOCATION: H:\2012\w120262\Engineering\design\conset\120262-C301 spec.dwg
LAYOUT: C303 - SPECS
DATE/TIME: August 24, 2012 - 12:09pm
PLOTTED BY: cartere

3 NORTH ELEVATION
SCALE: 1/8" = 1'-0"

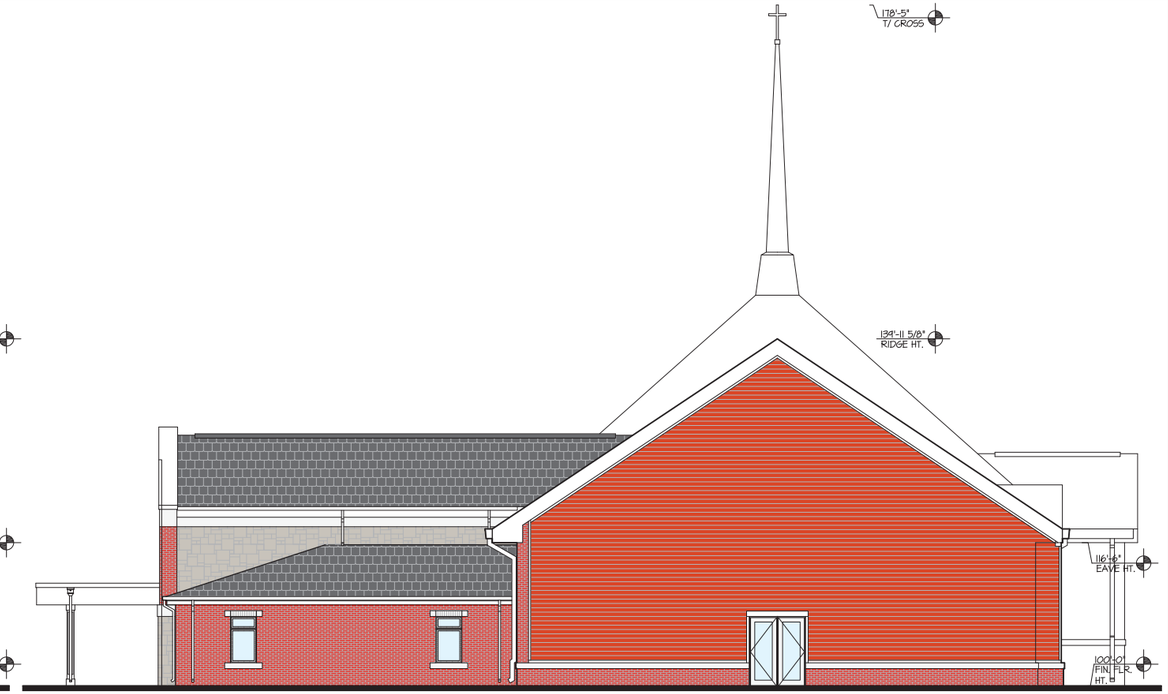

4 EAST ELEVATION
SCALE: 1/8" = 1'-0"

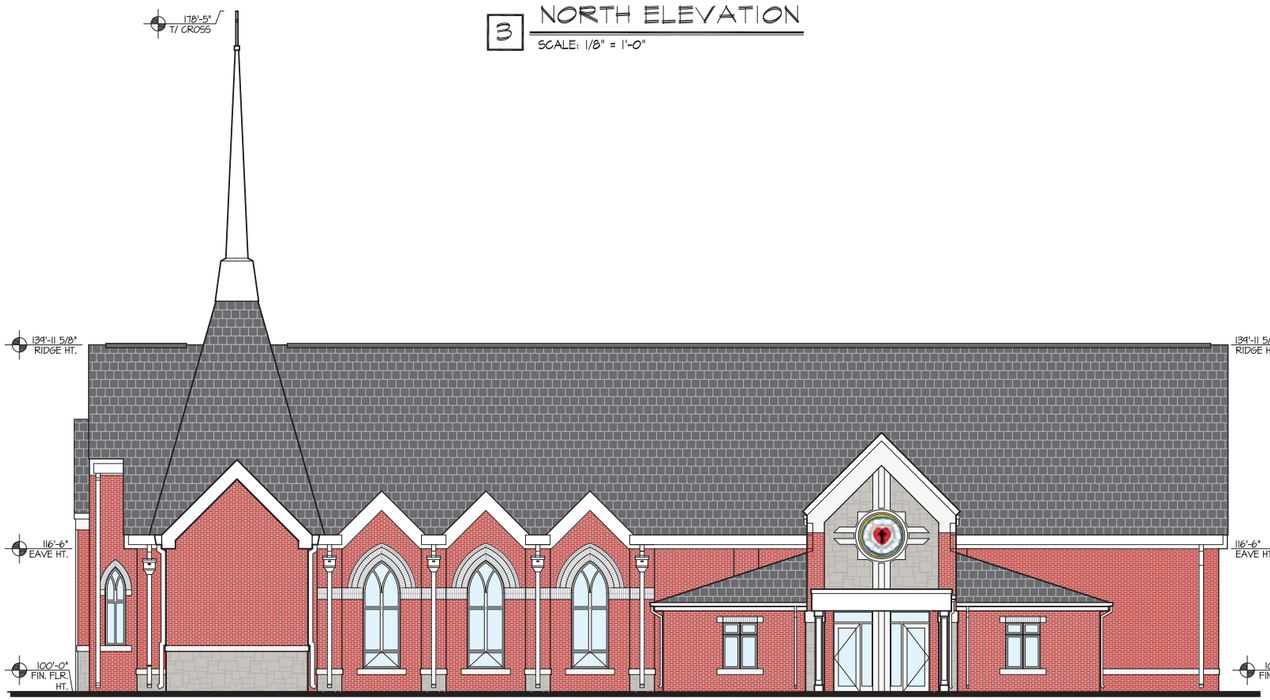

1 SOUTH ELEVATION
SCALE: 1/8" = 1'-0"

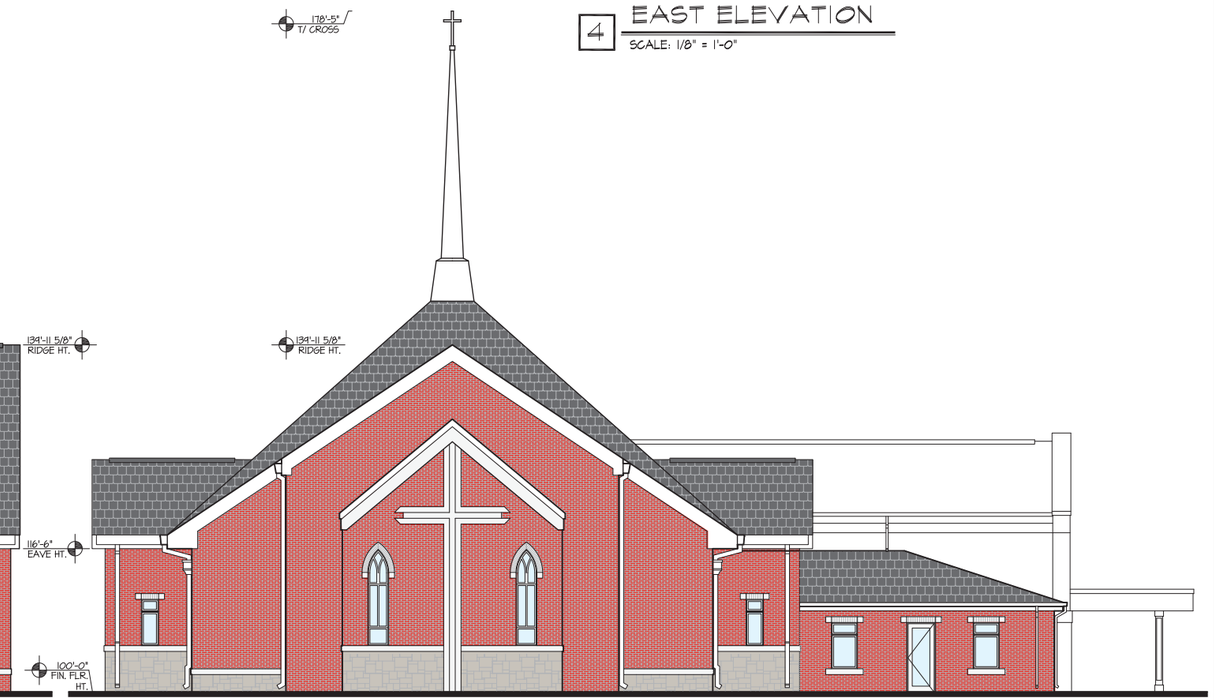

2 WEST ELEVATION
SCALE: 1/8" = 1'-0"

BUILDING ELEVATIONS

EPIPHANY EVANGELICAL LUTHERAN CHURCH

08/06/12 - 156TH STREET AND DITCH ROAD

HALSTEAD architects

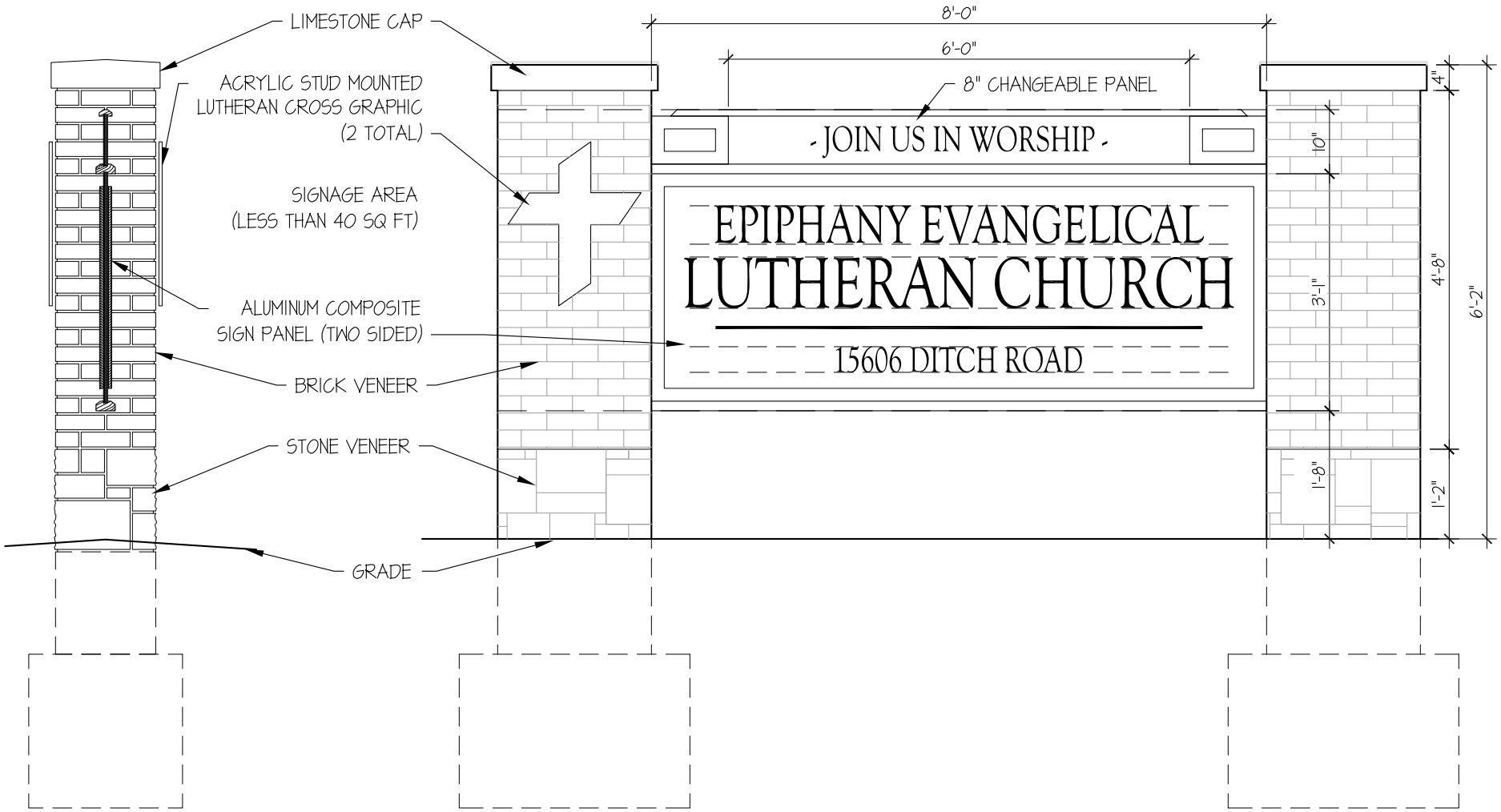

MONUMENTAL SIGNAGE

EPIPHANY EVANGELICAL LUTHERAN CHURCH

08/10/12 - 156TH STREET AND DITCH ROAD

HALSTEADarchitects

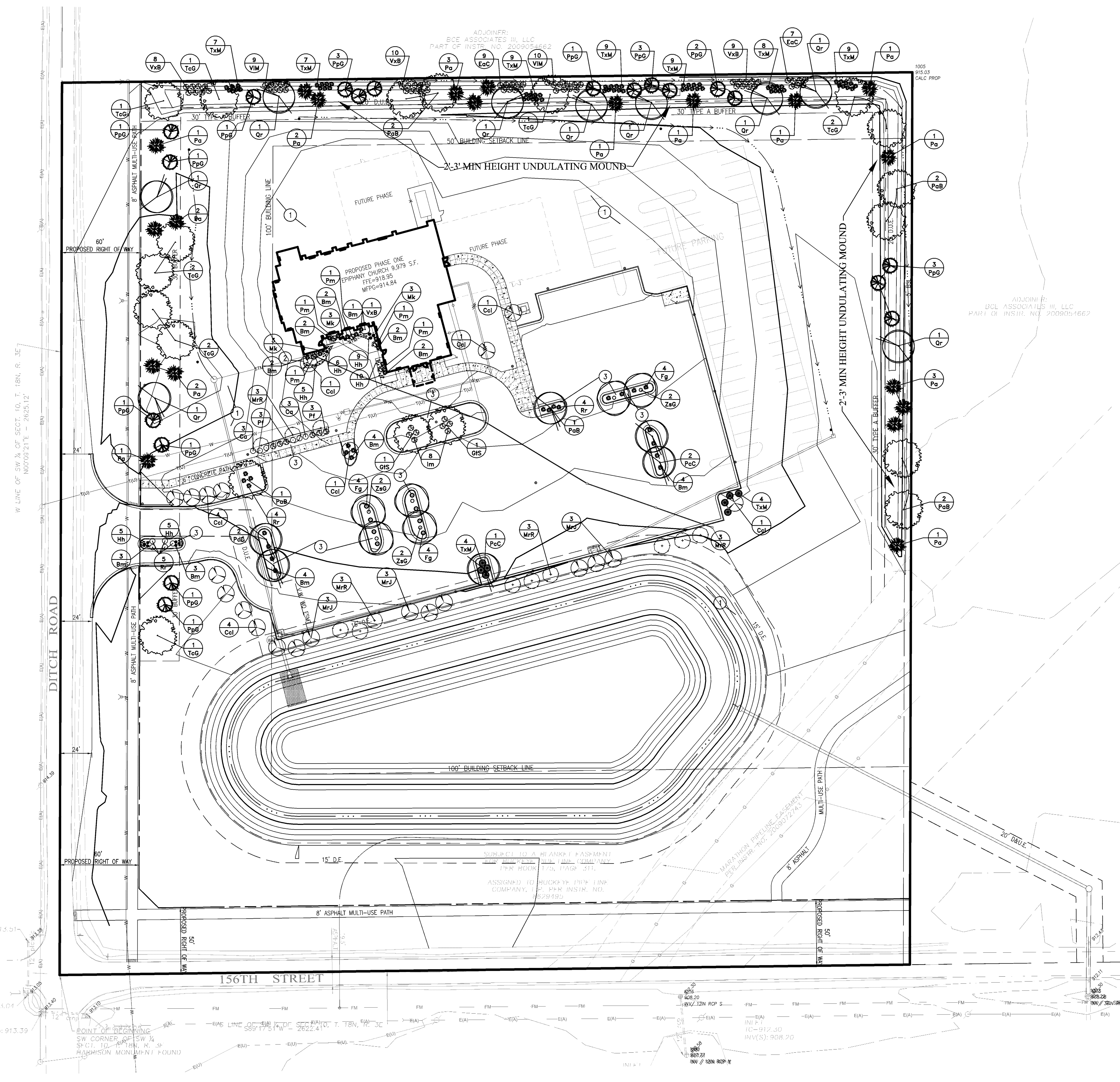

GENERAL NOTES

1. IN CASE OF DISCREPANCIES BETWEEN THE PLAN AND THE PLANT LIST, THE PLAN SHALL DICTATE. IF IN QUESTION, CONTACT THE LANDSCAPE DESIGNER.
2. ALL SHRUBS PLANTING AREAS TO BE COVERED WITH 4" THICK LAYER OF SHREDDED HARDWOOD BARK MULCH. ALL GROUND COVER BEDS SHALL BE COVERED WITH 1" SHREDDED HARDWOOD BARK MULCH. BARK MULCH SHALL BE APPROVED BY LANDSCAPE DESIGNER AND SHALL BE UNIFORM IN TEXTURE AND COLOR AND SHALL BE OBTAINED FROM SAWMILL OR LUMBERING OPERATIONS. NO UTILITY MULCH OR PROCESSED TREE TRIMMINGS WILL BE ALLOWED.
3. AN APPROVED PRE-EMERGENT HERBICIDE SHALL BE APPLIED IN ALL PLANTING AND GROUND COVER BEDS AT RATES SPECIFIED BY MANUFACTURER FOR EACH VARIETY OF PLANT.
4. FINAL PLACEMENT OF PLANT MATERIALS, ETC. SHALL BE APPROVED BY LANDSCAPE DESIGNER BEFORE PLANTING OPERATIONS ARE TO PROCEED. ALL TREE LOCATIONS SHALL BE MARKED WITH A WOODED STAKE INDICATING VARIETY AND SIZE OF TREE. ALL GROUND COVER AND MULCH BED LINES SHALL BE MARKED BY A HIGHLY VISIBLE PAINT LINE WITH OCCASIONAL WOOD STAKES FOR REFERENCE. ALL STAKES SHALL BE REMOVED FOLLOWING PLANTINGS OPERATIONS. LANDSCAPE DESIGNER RESERVES THE RIGHT TO ADJUST PLANT LOCATIONS ON SITE.
5. NO SUBSTITUTIONS OF PLANT MATERIAL WILL BE ALLOWED. IF PLANTS ARE SHOWN TO BE UNAVAILABLE, THE CONTRACTOR SHALL NOTIFY LANDSCAPE DESIGNER PRIOR TO BID DATE IN WRITING. ALL PLANTS SHALL BE INSPECTED AND TAGGED WITH PROJECT IDENTIFICATION AT NURSERY OR CONTRACTORS OPERATION PRIOR TO MOVING TO JOB SITE. PLANTS MAY ALSO BE INSPECTED AND APPROVED OR REJECTED ON THE JOB SITE.
6. ALL PLANTS ARE TO MEET OR EXCEED AMERICAN STANDARDS FOR NURSERY STOCK, 1986 EDITION, AS SET FORTH BY AMERICAN ASSOCIATION OF NURSERYMEN.
7. PLANTS AND ALL OTHER MATERIALS TO BE STORED ON SITE WILL BE PLACED WHERE THEY WILL NOT CONFLICT WITH CONSTRUCTION OPERATIONS AND AS DIRECTED BY OWNER.
8. ALL NEW LANDSCAPE PLANTINGS SHALL BE GUARANTEED FOR A PERIOD OF ONE YEAR FOLLOWING FINAL INSPECTION BY LANDSCAPE DESIGNER. AT THE END OF THIS PERIOD, PLANT MATERIAL TERMED DEAD OR UNSATISFACTORY BY LANDSCAPE DESIGNER SHALL BE REPLACED AT NO ADDITIONAL CHARGE BY THE LANDSCAPE CONTRACTOR.
9. THE LANDSCAPE CONTRACTOR SHALL OBTAIN AND PAY FOR ALL PERMITS AND FEES THAT MAY BE REQUIRED FOR HIS PORTION OF WORK.
10. PEAT MOSS TO BE USED ON PROJECT SHALL BE A DOMESTIC OR IMPORTED MATERIAL, CHOCOLATE BROWN IN COLOR AND COMPOSED OF PARTIALLY DECOMPOSED VEGETABLE MATERIAL. PEAT MOSS TO ALSO BE MILDLY ACIDIC IN CHARACTER AND SHALL MEET APPROVAL OF LANDSCAPE DESIGNER.
11. LANDSCAPE CONTRACTOR SHALL NOTIFY LANDSCAPE DESIGNER IN WRITING PRIOR TO BID DATE OF ANY PLANTS THAT HE FEELS MAY NOT SURVIVE IN LOCATIONS NOTED.
12. ALL LANDSCAPING PLANTINGS TO BE MAINTAINED FOR 1 YEAR FOLLOWING TURNOVER. MAINTENANCE TO INCLUDE WATERING, WEEDING, CULTIVATION, MULCHING, MOWING AND ALL OTHER NECESSARY OPERATIONS REQUIRED FOR PROPER ESTABLISHMENT OF PLANTINGS. NOTE: AT END OF MAINTENANCE PERIOD, CONTRACTOR TO REMOVE GUYING AND STAKING FROM TREES.
13. CONTRACTOR TO SUBMIT UNIT PRICES ON EVERY TYPE OF WORK AS REQUESTED BY LANDSCAPE DESIGNER.
14. BACKFILL FOR TREE AND SHRUB PLANTING SHALL BE 75% APPROVED TOPSOIL AND 25% APPROVED PEAT MOSS. TOP LAYER OF BACKFILL SHALL BE 100% EXISTING TOPSOIL. A 5-10-5 ANALYSIS SLOW RELEASE FERTILIZER SHALL BE INCORPORATED INTO BACKFILL AT APPROVED RATES.
15. PROVIDE MINIMUM 4" PLANTING SOIL IN ALL GROUND COVER AND FLOWER AREAS WITH MIXTURE COMPRISING OF ONE PART COMMERCIAL GRADE 'POTTING SOIL,' 5 PARTS TOPSOIL AND 4 PARTS PEAT MOSS. A FULL 4" LAYER OF APPROVED SHREDDED FIBROUS PEAT MOSS MAY BE USED IN LIEU OF PLANTING MIX.
16. PLANTS SHALL BEAR A TAG SHOWING GENUS, SPECIES AND VARIETY.
17. PLANTS SHALL BE CERTIFIED BY THE STATE OF INDIANA DEPARTMENT OF NATURAL RESOURCES AND FREE FROM DISEASE OR HAZARDOUS INSECTS.
18. ALL SUBSTITUTIONS MUST BE REVIEWED AND APPROVED BY THE LANDSCAPE ARCHITECT TO ENSURE COMPLIANCE WITH THE ORDINANCE REQUIREMENTS.

LANDSCAPE RECOMMENDATIONS

REQUIREMENT:	PROVIDED:
BUFFERYARD REQUIREMENTS SECTION 4.3.B.IV PUD 11-33	
156TH STREET: NONE REQUIRED ALONG THE GAS MAIN AND POND.	N/A
DITCH ROAD: NONE REQUIRED ALONG THE POND.	N/A
: 30' TYPE B BUFFER (1 SHADE TREE PER 30' W/ 50% EVERGREEN).	YES
NORTH PROPERTY LINE – : 30' TYPE A BUFFER (1 SHADE TREE PER 20' 4 SHRUBS PER 20' W/ 50% EVERGREEN	YES
EAST PROPERTY LINE – NONE REQUIRED (ABUTTING COMMON AREA) : PROVIDED TYPE B BUFFER (1 SHADE TREE PER 20' W/ 50% EVERGREEN)	YES
ROAD FRONTAGE SECTION 4.3.A PUD 11-33	
156TH STREET: NONE REQUIRED ALONG THE GAS MAIN AND POND.	N/A
DITCH ROAD: NONE REQUIRED ALONG THE POND.	N/A
ONSITE STANDARDS (10+/- ACRE SITE) WC16.06.050.A	
SHADE TREES: 2 PER ACRE REQUIRED. (20 REQUIRED)	YES
ORNAMENTAL TREES: 3 PER ACRE REQUIRED. (30 REQUIRED)	YES
SHRUBS: 10 PER ACRE REQUIRED. (100 REQUIRED)	YES
ROAD FRONTAGE STANDARDS WC16.06.050.B	
156TH STREET: NONE REQUIRED ALONG THE GAS MAIN AND POND.	N/A
DITCH ROAD: APPROXIMATELY 410 LINEAR FEET.	YES
INTERIOR PARKING AREA LANDSCAPING WC16.06.070.A	
10% VEHICLE USE AREA: 1 TREE & 4 SHRUBS PER ISLAND WITH 100% GROUNDCOVER.	YES

PLANT SCHEDULE

PLAN KEY	BOTANICAL NAME	COMMON NAME	SIZE	QUANTITY	ROOT CONDITION B & B	ROOT CONDITION BARE	ROOT CONDITION CONT	ON CENTER SPACING	SPECIAL INSTRUCTIONS
	CANOPY DECIDUOUS TREES								
GtS	GLEDITSIA TRIACANTHOS 'INERMIS'	SKYLINE HONEYCLOCUST	2"	2	X			SEE PLAN	
PaB	PLATANUS X ACERFOLIA 'BLOODGOOD'	BLOODGOOD LONDON PLANETREE	2"	8	X			SEE PLAN	
PcC	PYRUS CALLERYANA 'CLEVELAND SELECT'	NEW BRADFORD FLOWERING PEAR	2"	5	X			SEE PLAN	
Qr	QUERCUS RUBRA	RED OAK	2"	9	X			SEE PLAN	
TcG	TILIA CORDATA 'GREENSPIRE'	GREENSPIRE LINDEN	2"	10	X			SEE PLAN	
ZsG	ZELKOVA SERRATA 'GREENVASE'	GREENVASE ZELKOVA	2"	6	X			SEE PLAN	
	ORNAMENTAL TREES								
Ccl	CRATAEGUS CRUSGALLI 'INERMIS'	THORNLESS COCKSPUR HONEYLOCUST	2"	13	X			SEE PLAN	
MrJ	MALUS 'RED JEWEL'	'RED JEWEL' CRABAPPLE	2"	9	X			SEE PLAN	
MmR	MALUS 'ROYAL RAINDROPS'	'ROYAL RAINDROPS' CRABAPPLE	2"	12	X			SEE PLAN	
	EVERGREEN TREES								
Pa	PICEA ABIES	NORWAY SPRUCE	6'	20	X			SEE PLAN	
PpG	PICEA PUNGENS 'GLAUCA'	COLORADO BLUE SPRUCE	6'	19	X			SEE PLAN	
	DECIDUOUS SHRUBS								
Ca	COTONEASTER APICULATUM	CRANBERRY COTONEASTER	#5	6			X	SEE PLAN	
Pf	POTENTILLA FRUTICOSA 'GOLDFINGER'	GOLDFINGER POTENTILLA	#2	6			X	SEE PLAN	
Rr	ROSA 'RADRAZZ'	KNOCK OUT ROSE	#2	13			X	SEE PLAN	
VxB	VIBURNUM X BURKWOODII	BURKWOOD VIBURNUM	#2	28			X	SEE PLAN	
EaC	EUONYMUS ALATUS 'COMPACTUM'	DWARF BURNING BUSH	#5	16			X	36" O.C.	
VlM	VIBURNUM LANTANA 'MOHICAN'	LANTANA MOHICAN VIBURNUM	#5	19			X	36" O.C.	
	EVERGREEN SHRUBS								
Bm	BUXUS MICROPHYLLA	LITTLELEAF BOXWOOD	#5	29			X	36" O.C.	
Fg	FOTHERGILLA GARDENII	DWARF FOTHERGILLA	#5	12			X	36" O.C.	
Im	ILEX X MESERVEAE 'BLUE PRINCE'	BLUE PRINCE HOLLY	#3	8			X	36" O.C.	
Pm	PINUS MUGHO	MUGHO PINE	#5	5			X	36" O.C.	
TxM	TAXUS X MEDIA 'DENSIFORMIS'	DENSIFORMIS YEW	#5	66			X	36" O.C.	
	ORNAMENTAL GRASSES								
Hh	HEMEROCALLIS 'PARDON ME'	PARDON ME RED DAYLILLY	#1	40			X	24" O.C.	
Mk	MISCANTHUS SINENSIS 'KLEINE FONTAINE'	LITTLE FOUNTAIN DWARF SILVER GRASS	#3	9			X	36" O.C.	

LANDSCAPE PLAN NOTES:

(1) SOD OR SEED ALL AREAS. ALL SOD SHALL BE CERTIFIED GRADE CULTIVATED GRASS SOD: OF "ADVENTURE BLEND" TURF TYPE TALL FESCUE (BY GENERAL CONTRACTOR)

(2) LANDSCAPE BED EDGE (TYP)

(3) MULCH

NOTE:

ANY EXISTING TREE(S) THAT MAY REQUIRE REMOVAL BUT ARE NOT SHOWN ON THE PLAN AS BEING REMOVED MAY BE DONE SO, AS LONG AS THE TREE(S) ARE RELOCATED TO AN APPROVED ALTERNATIVE LOCATION ON SITE.

SCALE: 1" = 40'

0 20 40 80

811

Know what's below. Call before you dig.

Within Indiana Call
811 or 800-382-5544
24 Hours a Day, 7 Days a Week.

PER INDIANA STATE LAW IC 8-1-26. IT IS AGAINST THE LAW TO EXCAVATE WITHOUT NOTIFYING THE UNDERGROUND LOCATION SERVICE TWO (2) WORKING DAYS BEFORE COMMENCING WORK.

10505 N. College Avenue
Indianapolis, Indiana 46280
weihe.net
317 | 846 - 6611
800 | 452 - 6408
317 | 843 - 0546 fax
ALLAN H. WEIHE, P.E., L.S. - FOUNDER

WEIHE ENGINEERS
Land Surveying | Civil Engineering
Landscape Architecture

PROJECT NO.: W12.0262
DWG NAME: 120262-l101.dwg
DESIGNED BY: EAC/MG
DRAWN BY: EAC/MG
CHECKED BY: JKS
DATE: 06.29.2012

DATE	BY	REVISIONS AND ISSUES
07/26/12	EAC/MG	50% CD SET
8/23/12	EAC	REVISIONS PER WESTFIELD REVIEW

ERIC A. CARTER REGISTERED LANDSCAPE ARCHITECT No. 20300131 STATE OF INDIANA
NOT FOR CONSTRUCTION / APPROVAL PENDING

ERIC A. CARTER RLA 20300131

PREPARED FOR:
EPIPHANY EVANGELICAL LUTHERAN CHURCH PHASE ONE
156TH AND DITCH ROAD, WESTFIELD IN
LANDSCAPE PLAN
Part of the SE Corner of SW/1/4 of Section 10, Township 18 North, Range 3 East, Washington Township, Hamilton County, Indiana

SHEET NO. L101

PROJECT NO. W12.0262

LOCATION: H:\2012\w120262\Engineering\design\conset\120262-l101.dwg
LAYOUT: L101 - LANDSCAPE PLAN
DATE/TIME: August 24, 2012 - 12:11pm
PLOTTED BY: cartere

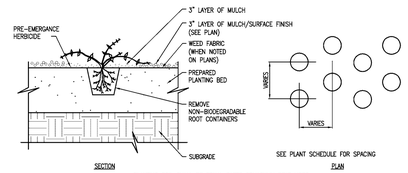

PLANTING SOIL SHALL BE EQUAL PARTS SPHAGNUM PEAT MOSS, COMPOSTED MANURE, AND EXISTING SOIL. TAMPED FIRMLY.

GROUNDCOVER PLANTING

(NO SCALE)

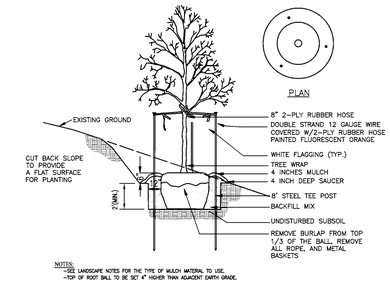

NOTES:
-SEE LANDSCAPE NOTES FOR THE TYPE OF MULCH MATERIAL TO USE.
-TOP OF ROOT BALL TO BE SET 4" HIGHER THAN ADJACENT EARTH GRADE.

TREE PLANTING ON SLOPE

(NO SCALE)

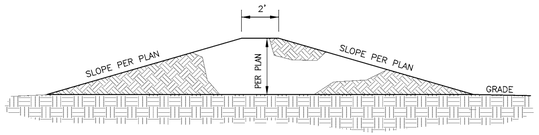

LANDSCAPE MOUNDING DETAIL

(NO SCALE)

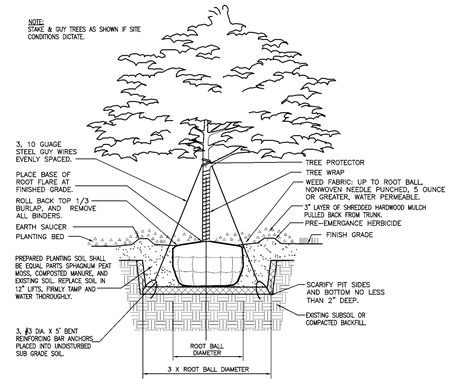

SHADE TREE PLANTING DETAIL

(NO SCALE)

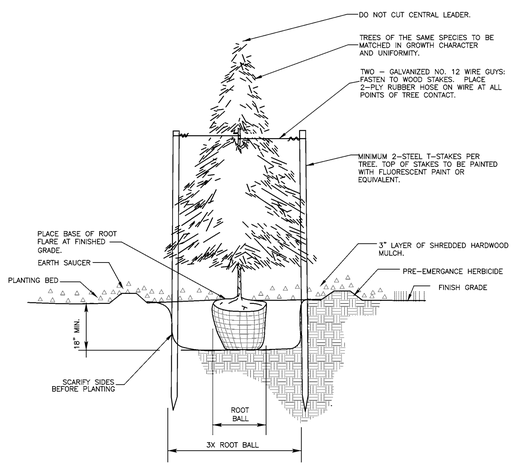

EVERGREEN PLANTING & STAKING

(NO SCALE)

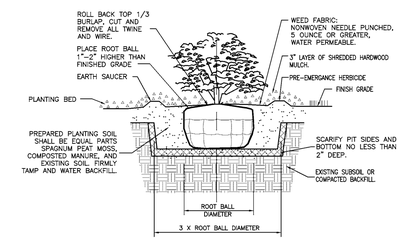

SHRUB & SMALL TREE PLANTING DETAIL

(NO SCALE)

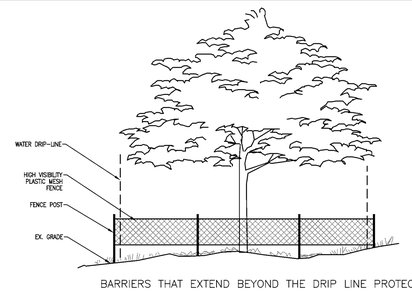

BARRIERS THAT EXTEND BEYOND THE DRIP LINE PROTECT TREES DURING CONSTRUCTION.

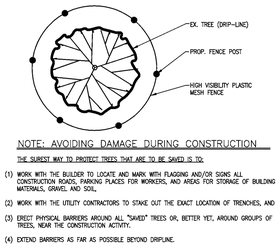

NOTE: AVOIDING DAMAGE DURING CONSTRUCTION

THE SUREST WAY TO PROTECT TREES THAT ARE TO BE SAVED IS TO:

(1) WORK WITH THE BUILDER TO LOCATE AND MARK WITH FLAGGING AND/OR SIGNS ALL CONSTRUCTION ROADS, PARKING PLACES FOR WORKERS, AND AREAS FOR STORAGE OF BUILDING MATERIALS, GRAVEL AND SOIL.

(2) WORK WITH THE UTILITY CONTRACTORS TO STAKE OUT THE EXACT LOCATION OF TRENCHES, AND

(3) ERECT PHYSICAL BARRIERS AROUND ALL "SAVED" TREES OR, BETTER YET, AROUND GROUPS OF TREES, NEAR THE CONSTRUCTION ACTIVITY.

(4) EXTEND BARRIERS AS FAR AS POSSIBLE BEYOND DRIPLINE.

TREE PRESERVATION DETAIL

(NO SCALE)

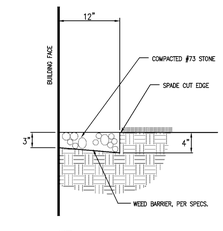

NOTE:
GRAVEL MOW STRIP IS NOT REQUIRED WHERE PLANTING BEDS OR CONCRETE FLATWORK IS DIRECTLY ADJACENT TO BUILDING.

GRAVEL MOWING STRIP

(NO SCALE)

811

Know what's **below.**
Call before you dig.

Within Indiana Call
811 or 800-382-5544
24 Hours a Day, 7 Days a Week.

PER INDIANA STATE LAW IC 8-1-26, IT IS AGAINST THE LAW TO EXCAVATE WITHOUT NOTIFYING THE UNDERGROUND LOCATION SERVICE TWO (2) WORKING DAYS BEFORE COMMENCING WORK.

10505 N. College Avenue
Indianapolis, Indiana 46280
weihe.net

317 | 846 - 6611
800 | 452 - 6408
317 | 843 - 0546 *fax*

ALLAN H. WEIHE, P.E., L.S. - FOUNDER

WEIHE ENGINEERS

Land Surveying | Civil Engineering
Landscape Architecture

	BY	DATE
DESIGNED BY:	EAC/JAG	07/20/12
DRAWN BY:	EAC/JAG	8/23/12
CHECKED BY:	JKS	
DATE:	08.28.2012	

PROJECT NO.: W12.0262
DWG. NAME: 120262-1101.dwg

REVISIONS AND ISSUES
ISSUED FOR: REVISIONS FOR WESTFIELD REVIEW

ERIC A. CARTER
REGISTERED
LANDSCAPE ARCHITECT
No. 20300131
STATE OF INDIANA
NOT VALID UNLESS PRINTED

ERIC A. CARTER RLA 20300131

PREPARED FOR:
EPIPHANY EVANGELICAL LUTHERAN CHURCH PHASE ONE
156TH AND DITCH ROAD, WESTFIELD IN

LANDSCAPE DETAILS
Part of the SE Corner of SW/14 of Section 10, Township 18 North, Range 3 East, Washington Township, Hamilton County, Indiana

SHEET NO.
L201

PROJECT NO.
W12.0262

LOCATION: J:\2012\w120262\Engineering\design\cover\120262-1101.dwg
LAYOUT: 20-SHADE TREE PLANTING
DATE/TIME: August 24, 2012 - 12:11pm
PLOTTED BY: carterea