# BRIDGEWATER APARTMENTS

Developed by:
Justus at Bridgewater LLC
1398 N. Shadeland Ave.
Indianapolis, Indiana 46219
Contact Person: Doug Peters
Phone: 317-353-8311

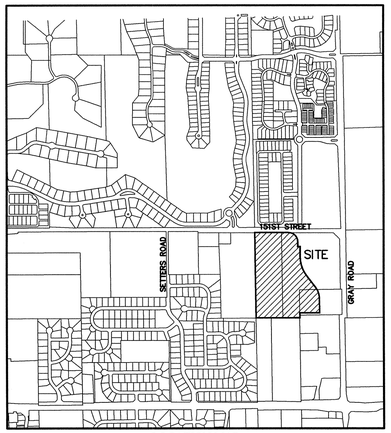


LOCATION MAP
N.T.S.

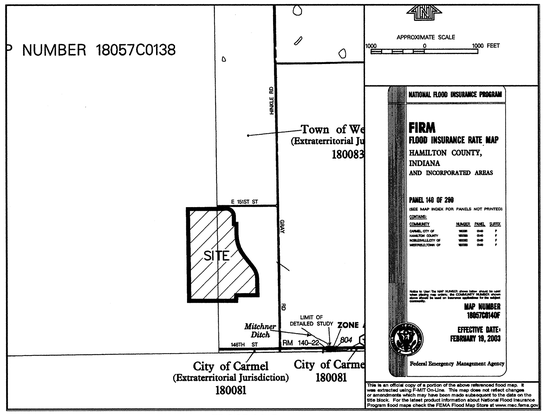


FLOOD MAP
N.T.S.

INDEX

| SHT. | DESCRIPTION |
|---|---|
| C001 | COVER SHEET |
| C100-C101 | TOPOGRAPHICAL SURVEY |
| C200-C211 | SITE PLAN/ SITE DEVELOPMENT PLAN |
| C300-C305 | EROSION CONTROL PLAN & SPECIFICATIONS |
| C400-C402 | UTILITY PLAN/ TRAFFIC CONTROL PLAN/AUTO TURN EXHIBIT |
| C500-C502 | SANITARY SEWER PLAN & PROFILES |
| C600-C603 | STORM SEWER PLAN & PROFILES |
| C700-C702 | WATER PLAN & DETAILS |
| C800-C805 | CONSTRUCTION DETAILS & SPECIFICATIONS<br>SANITARY<br>STORM<br>STREET |
| C900-C901 | LANDSCAPE PLANS |
| C902 | PHOTOMETRIC PLAN |

REVISIONS

| SHT. | DESCRIPTION |
|---|---|
| | |
| | |
| | |
| | |
| | |
| | |
| | |

SCALE: 1"=120'

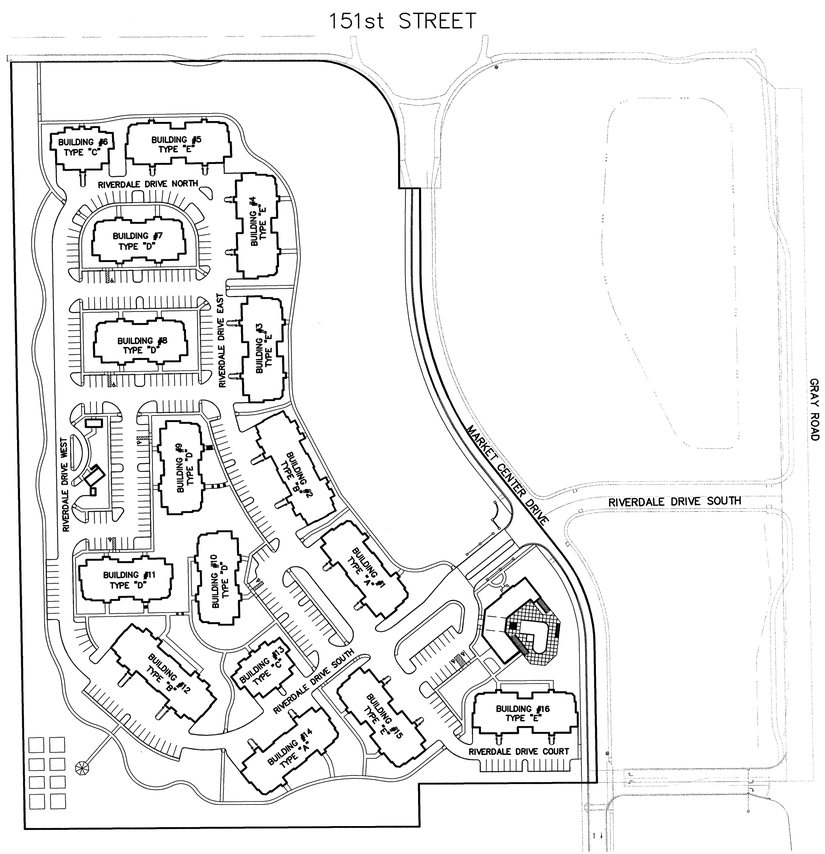


DESCRIPTION

Part of the Northeast Quarter of the Southeast Quarter of Section 17, Township 18 North, Range 4 East in Hamilton County, Indiana, said part being more particularly described as follows:

Lot 1 of Bridgewater Marketplace, Section 2 Recorded as Instrument No. _____, Plat Cabinet_____, Slide____ in the office of the Recorder of Hamilton County, Indiana.

SPEED LIMIT: 25 M.P.H.

DESIGN DATA

SITE=23.06 AC.
240 UNITS = 10.40 UNITS PER ACRE

| | |
|---|---|
| RIVERDALE DRIVE SOUTH | 1,003.12 L.F. |
| RIVERDALE DRIVE WEST | 711.97 L.F. |
| RIVERDALE DRIVE EAST | 223.08 L.F. |
| RIVERDALE DRIVE NORTH | 826.88 LF. |
| RIVERDALE DRIVE COURT | 429.30 L.F. |
| TOTAL | 3,194.35 L.F. |

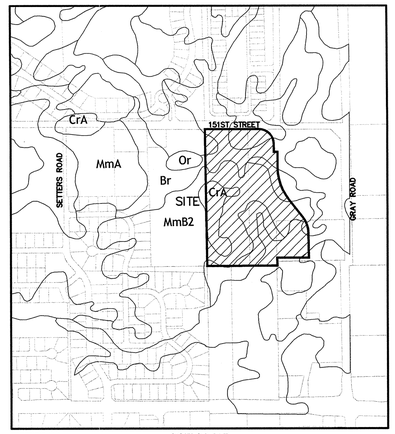


SOILS MAP
N.T.S.

Br:-- Brookston silty clay loam- this soil is dark colored, silty in texture and on depressional uplands. It is deep and very poorly drained with moderate permeability. It has high available water for plant growth and high organic matter content. It has compact till starting at a depth of 40 to 60 inches. The main soil features that affect the urban development uses are seasonal high water table, high potential frost action, moderate shrink-swell potential, moderate permeability and ponded surface water. Because of these engineering limitations this site will be constructed as follows. Maple Village, Section Three, being a single family development within the jurisdiction of The City of Westfield and Hamilton County will have to abide by the current Subdivision Control Ordinance. This ordinance requires that we have an artificially drained site and that the buildings within this development be well above the 100yr elevation of the proposed detention basins and therefore be protected from flooding. All buildings will be of large slab type construction. In cases where a high water table is present special footings shall be constructed. All roads will have adequate sub-base. All sanitary sewers shall be public and therefore no septic systems shall be allowed Crosby silt loam, 0-3 percent slopes- this soil is light colored, silty in texture and on sloping uplands.

CrA--Crosby silt loam, 0 to 2 percent slopes
This is a somewhat poorly drained soil and has a seasonal high watertable at 0.5 to 2.0 ft. and is on rises on uplands. Slopes are 0 to 2 percent. The native vegetation is hardwoods. The surface layer is silt loam and has moderately low or moderate organic matter content (1.0 to 3.0 percent). Permeability is very slow (< 0.06 in/hr) in the most restrictive layer above 60 inches. Available water capacity is moderate (6.2 inches in the upper 60 inches).The pH of the surface layer in non-limed areas is 5.1 to 6.0. Droughtiness and wetness are management concerns for crop production. This soil responds well to tile drainage.

MmA--Miami silt loam, 0 to 2 percent slopes, gravelly substratum
This well drained soil has a watertable at a depth greater than 40 inches and is on uplands. Slopes are 0 to 2 percent. The native vegetation is hardwoods. The surface layer is silt loam and has moderately low organic matter content (1.0 to 3.0 percent). Permeability is moderately slow (0.2 to 0.6 in/hr) in the most restrictive layer above 60 inches. Available water capacity is moderate (7.7 inches in the upper 60 inches).The pH of the surface layer in non-limed areas is 5.1 to 6.0. Droughtiness is a management concern for crop production.

MmB2--Miami silt loam, 2 to 6 percent slopes, eroded
This moderately well drained soil has a seasonal high watertable at 2.0 to 3.5 ft. and is on sideslopes and rises on uplands. Slopes are 2 to 6 percent. The native vegetation is hardwoods. The surface layer is silt loam and has moderately low organic matter content (1.0 to 2.0 percent). Permeability is very slow (< 0.06 in/hr) in the most restrictive layer above 60 inches. Available water capacity is low (5.9 inches in the upper 60 inches). The pH of the surface layer in non-limed areas is 5.1 to 6.0. Droughtiness and water erosion are management concerns for crop production.

Pn--Patton silty clay loam, 0 to 2 percent slopes
This is a deep poorly drained soil and has a seasonal high watertable at 0.5 to 2.0 ft. and is in broad depressions and drainageways on lake plains and terraces. Slopes are 0 to 2 percent. The native vegetation is grasses. The surface layer is silt loam and has moderately low or moderate organic matter content (1.0 to 3.0 percent). Permeability is very slow (< 0.06 in/hr) in the most restrictive layer above 60 inches. Available water capacity is moderate (6.2 inches in the upper 60 inches).The pH of the surface layer in non-limed areas is 5.1 to 6.0. Droughtiness and wetness are management concerns for crop production. This soil responds well to tile drainage.

INDIANA DEPARTMENT OF TRANSPORTATION STANDARD SPECIFICATIONS LATEST EDITION TO BE USED WITH THESE PLANS UNLESS ALTERNATE SPECIFICATIONS ARE SHOWN WITHIN.

WESTFIELD CONSTRUCTION STANDARD DETAILS AND SPECIFICATIONS LATEST EDITIONS TO BE USED WITH THESE PLANS.


PLANS PREPARED BY:
STOEPPELWERTH & ASSOCIATES, INC.
CONSULTING ENGINEERS & LAND SURVEYORS
7965 E. 106TH STREET, FISHERS, INDIANA 46038
PHONE: (317)-849-5935
FAX: (317)-849-5942
CONTACT PERSON: BRIAN K. ROBINSON
EMAIL: BROBINSON@STOEPPELWERTH.COM


PLANS CERTIFIED BY:

David J. Stoeppelwerth 2/1/13
DAVID J. STOEPPELWERTH DATE
PROFESSIONAL ENGINEER
NO. 19358

DAVID J. STOEPPELWERTH REGISTERED No. 19358 STATE OF INDIANA PROFESSIONAL ENGINEER

S:\56030JUS-L1\DWG\C001-COVER SHEET.dwg, 1/30/2013 8:19:06 AM, KGilison, 1:1

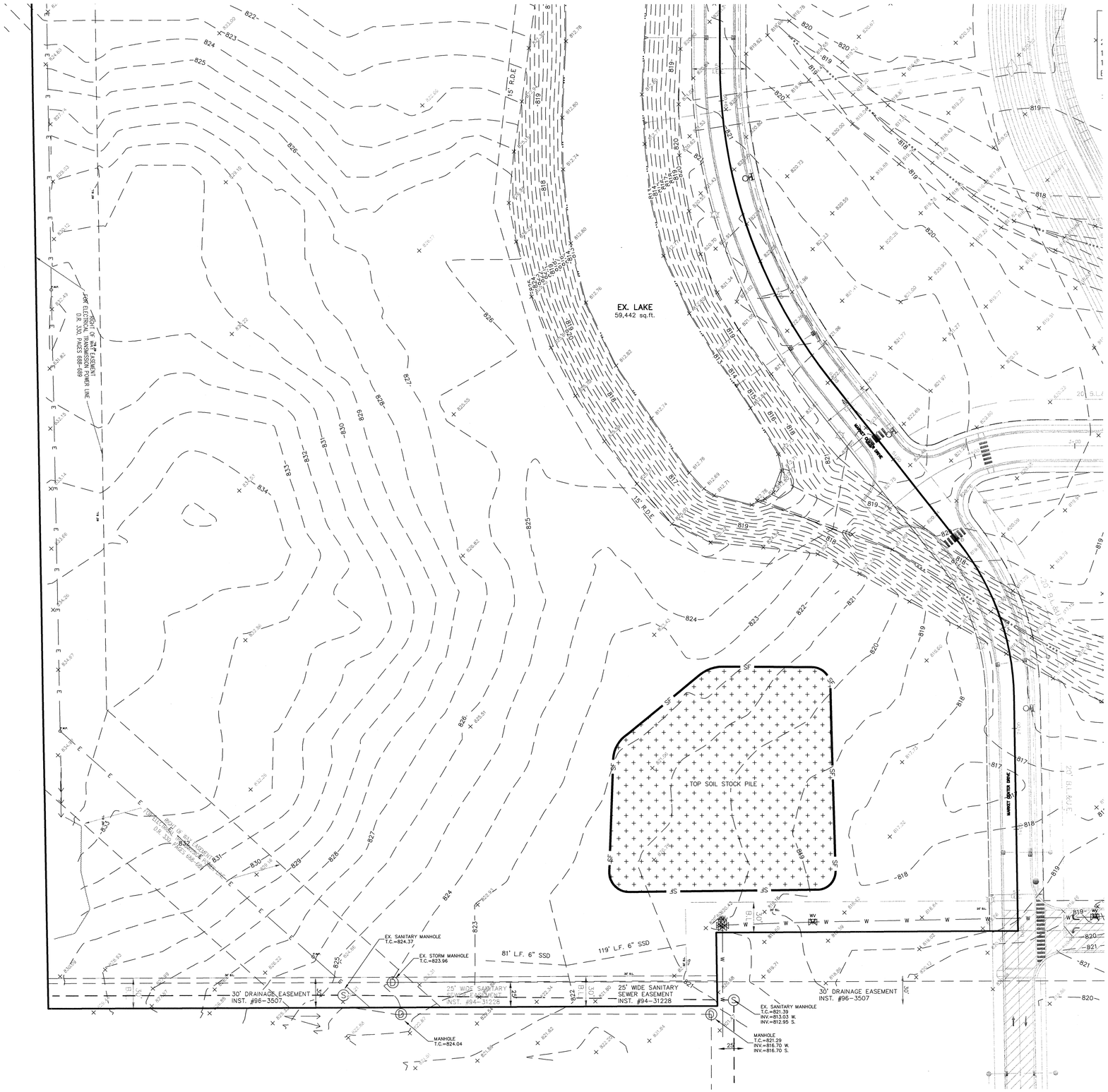


GRAPHIC SCALE

50 0 25 50

( IN FEET )
1 inch = 50 ft.

CONTRACTOR SHALL VERIFY DEPTHS OF ALL EXISTING ONSITE UTILITIES PRIOR TO CONSTRUCTION TO CONFIRM THERE IS NOT ANY CONFLICTS WITH OTHER UTILITIES, STORM SEWERS OR STREETS. CONFLICTS AFTER CONSTRUCTION BEGINS ARE SOLELY THE CONTRACTOR'S RESPONSIBILITY.

## LEGEND

- E — OVERHEAD ELECTRIC LINES
- T — TELEPHONE LINE
- W — WATER LINE
- SANITARY SEWER LINE; MANHOLE
- STORM SEWER LINE; MANHOLE, CURB INLET, FLAT INLET & ENDSECTION
- FENCE LINE
- P.W.P. POWER POLES
- LIGHT POLE
- SANITARY WET WELL
- GUY WIRE
- T.P. TELEPHONE PEDESTAL
- T TELEPHONE MANHOLE
- G.V. GAS VALVE
- C.O. CLEANOUT
- W.M. WATER METER
- WATER VALVE
- F.H. FIRE HYDRANT

BENCHMARK:

REFERENCE: FOUND HARRISON MONUMENT IN THE INTERSECTION OF 146TH STREET AND CAREY ROAD PER THE 'HAMILTON RECORD CORNER' DATA SHEET NO. N5, DATED SEPTEMBER 30, 2002.

ELEV.: 844.557 (NGVD 1929)

TBM. #1: SET ON THE SOUTH BASE BOLT OF THE TRAFFIC SIGNAL POLE AT THE NORTHEAST CORNER OF 146TH STREET AND CAREY ROAD.

ELEV.: 846.22 (NGVD 1929)

TBM #2: SET ON NORTHEAST CAP BOLT ON FIRE HYDRANT LOCATED 160 NORTH AND 32 FEET WEST OF THE CENTERLINE-CENTERLINE INTERSECTION OF CAREY ROAD AND NORTH VILLAGE PARK DRIVE.

ELEV.: 838.37 (NGVD 1929)

TBM #3: SET CUT "X" ON THE EAST CAP BOLT OF THE FIRE HYDRANT LOCATED ON THE SOUTH SIDE OF SADDLEHORN DRIVE AND CAREY ROAD.

ELEV.: 838.89 (NGVD 1929)

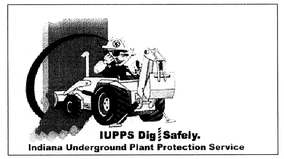


811
Know what's below.
Call before you dig.

| DATE | MARK | REVISIONS | BY |
|---|---|---|---|

DAVID J. STOEPPELWERTH
REGISTERED
No. 19358
STATE OF INDIANA
PROFESSIONAL ENGINEER

THIS DRAWING IS NOT INTENDED TO BE REPRESENTED AS A RETRACEMENT OR ORIGINAL BOUNDARY SURVEY, A RIGHT OF WAY SURVEY, OR A SURVEYOR LOCATION REPORT.

CERTIFIED: 2/1/12

David J. Stoeppelwerth


STOEPPELWERTH
ALWAYS ON
7965 East 106th Street, Fishers, IN 46038-2505
phone: 317.849.5935 fax: 317.849.5942


# TOPOGRAPHICAL SURVEY/DEMO PLAN
# BRIDGEWATER APARTMENTS

HAMILTON COUNTY, INDIANA
WESTFIELD

DRAWN BY: KRG
CHECKED BY: BKR

SHEET NO.
C100

S & A JOB NO.
56030JUSL1

S:\56030JUS-L1\DWG\C100-Topographical Survey.dwg, 1/30/2013 9:11:34 AM, KGilison, 1:1

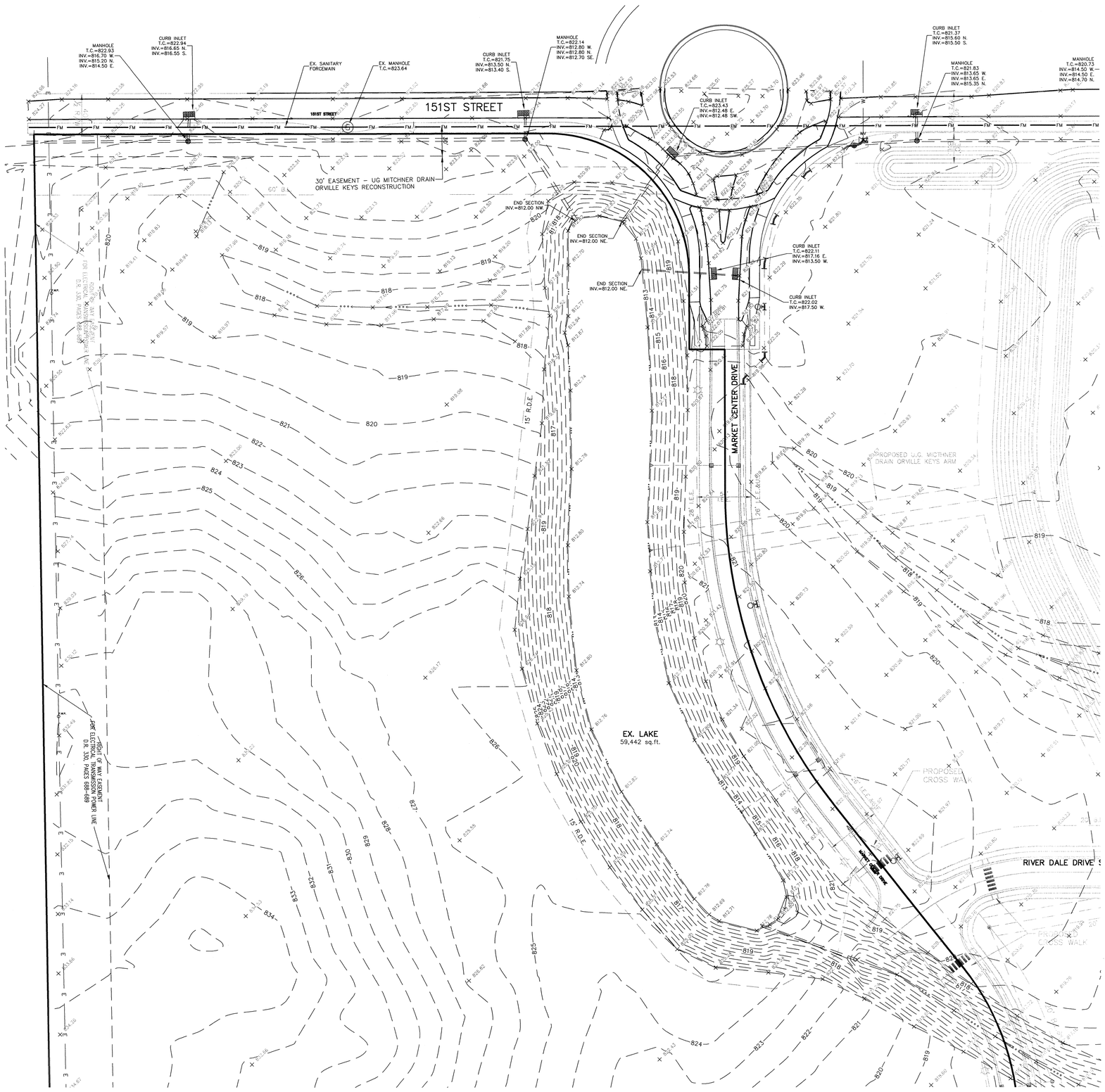


GRAPHIC SCALE

50 0 25 50

( IN FEET )
1 inch = 50 ft.

CONTRACTOR SHALL VERIFY DEPTHS OF ALL EXISTING ONSITE UTILITIES PRIOR TO CONSTRUCTION TO CONFIRM THERE IS NOT ANY CONFLICTS WITH OTHER UTILITIES, STORM SEWERS OR STREETS. CONFLICTS AFTER CONSTRUCTION BEGINS ARE SOLELY THE CONTRACTOR'S RESPONSIBILITY.

## LEGEND

- OVERHEAD ELECTRIC LINES
- TELEPHONE LINE
- WATER LINE
- SANITARY SEWER LINE; MANHOLE
- STORM SEWER LINE; MANHOLE, CURB INLET, FLAT INLET & ENDSECTION
- FENCE LINE
- POWER POLES
- LIGHT POLE
- SANITARY WET WELL
- GUY WIRE
- TELEPHONE PEDESTAL
- TELEPHONE MANHOLE
- GAS VALVE
- CLEANOUT
- WATER METER
- WATER VALVE
- FIRE HYDRANT

BENCHMARK:

REFERENCE: FOUND HARRISON MONUMENT IN THE INTERSECTION OF 146TH STREET AND CAREY ROAD PER THE 'HAMILTON RECORD CORNER' DATA SHEET NO. N5, DATED SEPTEMBER 30, 2002.

ELEV.: 844.557 (NGVD 1929)

TBM. #1: SET ON THE SOUTH BASE BOLT OF THE TRAFFIC SIGNAL POLE AT THE NORTHEAST CORNER OF 146TH STREET AND CAREY ROAD.

ELEV.: 846.22 (NGVD 1929)

TBM #2: SET ON NORTHEAST CAP BOLT ON FIRE HYDRANT LOCATED 160 NORTH AND 32 FEET WEST OF THE CENTERLINE-CENTERLINE INTERSECTION OF CAREY ROAD AND NORTH VILLAGE PARK DRIVE.

ELEV.: 838.37 (NGVD 1929)

TBM #3: SET CUT "X" ON THE EAST CAP BOLT OF THE FIRE HYDRANT LOCATED ON THE SOUTH SIDE OF SADDLEHORN DRIVE AND CAREY ROAD.

ELEV.: 838.89 (NGVD 1929)

IUPPS Dig Safely.
Indiana Underground Plant Protection Service

811 Know what's below. Call before you dig.

| DATE | MARK | REVISIONS | BY |
|---|---|---|---|

DAVID J. STOEPPELWERTH REGISTERED No. 19358 STATE OF INDIANA PROFESSIONAL ENGINEER

THIS DRAWING IS NOT INTENDED TO BE REPRESENTED AS A RETRACEMENT OR ORIGINAL BOUNDARY SURVEY, A ROUTE SURVEY OR A SURVEYOR LOCATION REPORT.
CERTIFIED: 2/1/12

STOEPPELWERTH
ALWAYS ON
7965 East 106th Street, Fishers, IN 46038-2505
phone: 317.849.5935 fax: 317.849.5942

# TOPOGRAPHICAL SURVEY/DEMO PLAN
## BRIDGEWATER APARTMENTS
HAMILTON COUNTY, INDIANA
WESTFIELD

DRAWN BY: KRG
CHECKED BY: BKR
SHEET NO. C101
S & A JOB NO. 56030JUSL1

S:\56030JUS-L1\DWG\C101-Topographical Survey.dwg, 1/29/2013 12:19:30 PM, KGilison, 1:1

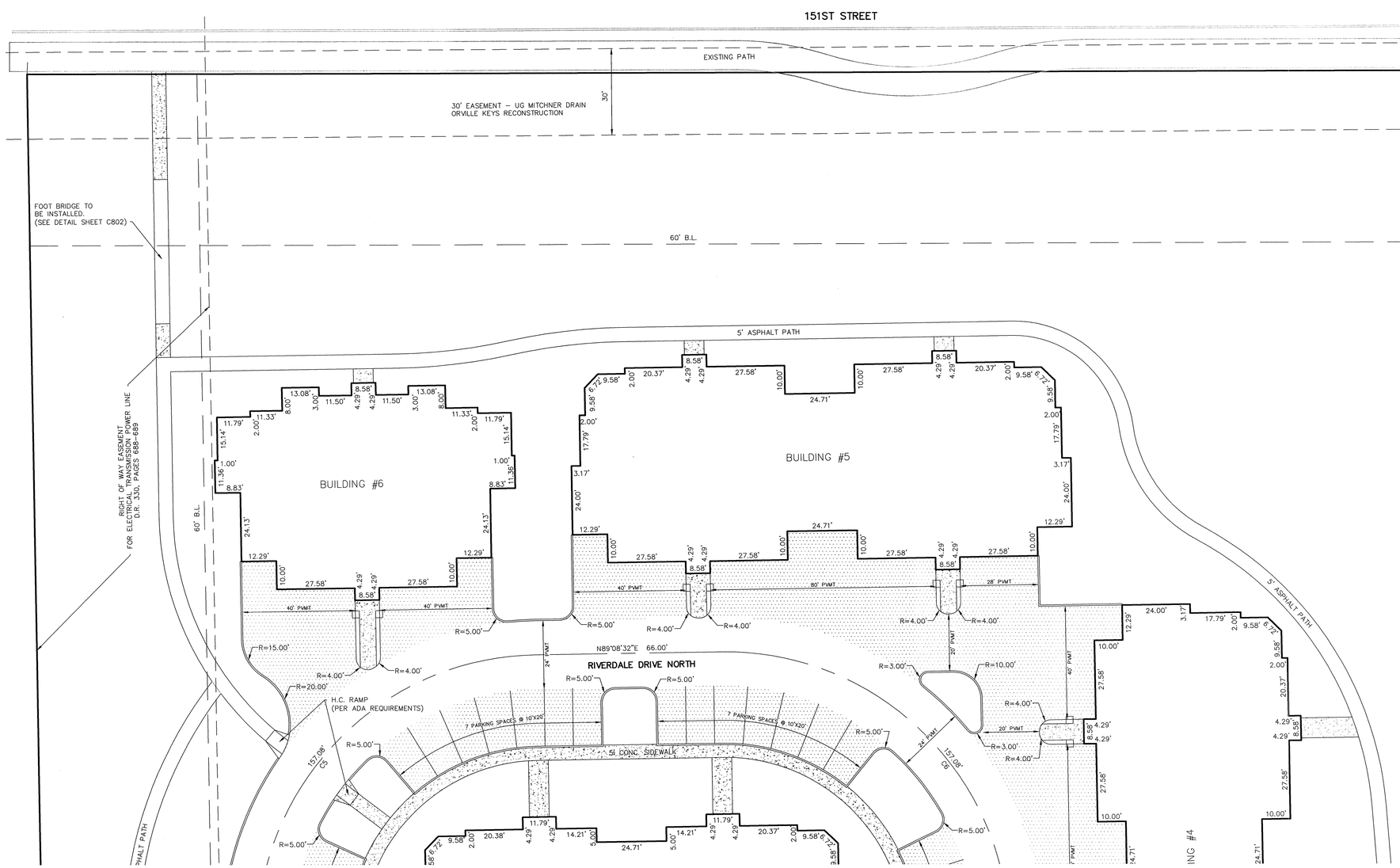


GRAPHIC SCALE

20 0 10 20

( IN FEET )
1 inch = 20 ft.

**LEGEND**

| | |
|---|---|
| B.L. | BUILDING LINE |
| D.U.&S.E. | DRAINAGE UTILITY & STORM EASEMENT |
| D.E. | DRAINAGE EASEMENT |
| U.E. | UTILITY EASEMENT |
| L.M.A.E. | LANDSCAPE MAINTENANCE ACCESS EASEMENT |
| R= | RADIUS |
| H.C. | HANDICAP |
| CONC. | CONCRETE |
| | PROPOSED CONCRETE |
| | LIGHT DUTY ASPHALT DRIVE AREA (SEE DETAIL C802) |
| | HEAVY DUTY ASPHALT DRIVE AREA (SEE DETAIL C802) |

262 PARKING SPACES
120 CAR GARAGE UNITS
6 H.C. SPACES
1 VAN ACCESSIBLE SPACE
509 SPACES TOTAL

REQUIRED PARKING SPACES = 480

240 UNITS TOTAL

CENTERLINE CURVE DATA

| CURVE | RADIUS | LENGTH | TANGENT | CHORD | CHORD BEARING | DELTA |
|---|---|---|---|---|---|---|
| C1 | 100.00' | 49.49' | 25.26' | 48.99' | S65°44'45"W | 28°21'27" |
| C2 | 100.00' | 49.49' | 25.26' | 48.99' | S65°44'45"W | 28°21'27" |
| C3 | 150.00' | 209.81' | 126.18' | 193.12' | N88°21'46"W | 80°08'26" |
| C4 | 100.00' | 82.79' | 43.93' | 80.44' | N24°34'30"W | 47°26'04" |
| C5 | 100.00' | 157.08' | 100.00' | 141.42' | N44°08'32"E | 90°00'00" |
| C6 | 100.00' | 157.08' | 100.00' | 141.42' | S45°51'28"E | 90°00'00" |
| C7 | 500.00' | 327.90' | 170.09' | 322.06' | S19°38'43"E | 37°34'30" |
| C8 | 50.00' | 45.19' | 24.27' | 43.67' | S64°19'33"E | 51°47'09" |
| C9 | 25.00' | 19.63' | 10.36' | 19.13' | S15°55'59"E | 45°00'00" |
| C10 | 25.00' | 19.63' | 10.36' | 19.13' | S29°04'01"W | 45°00'00" |
| C11 | 32.00' | 50.25' | 31.98' | 45.24' | N44°07'28"E | 89°57'53" |

1. THE UTILITIES SHOWN ON THESE PLANS AND ON THE TOPOGRAPHICAL SURVEY MAY NOT BE A COMPLETE REPRESENTATION OF THE EXISTING UTILITIES ON AND AROUND THE SITE. THE LOCATION AND SIZE OF THESE UTILITIES MAY BE APPROXIMATE. THE ENGINEER AND/OR SURVEYOR SHALL NOT BE HELD LIABLE FOR ANY INACCURATE UTILITY INFORMATION INDICATED, IMPLIED, OR NOT SHOWN.

2. THE CONTRACTOR SHALL BE RESPONSIBLE FOR LOCATING AND MAINTAINING IN SERVICE ALL EXISTING UTILITIES ENCOUNTERED DURING CONSTRUCTION UNLESS OTHERWISE INDICATED IN THE DRAWINGS. ANY PIPING, WHICH CAN BE REMOVED DURING CONSTRUCTION WITHOUT UNDUE INTERRUPTION OF SERVICE MAY BE REMOVED AND REPLACED BY THE CONTRACTOR, AT HIS EXPENSE WITH THE PERMISSION OF THE OWNER.

3. BEFORE WORKING WITH OR AROUND EXISTING UTILITIES, THE APPLICABLE UTILITY COMPANY SHALL BE CONTACTED BY THE CONTRACTOR.

4. THE CONTRACTOR SHALL PRESERVE AND PROTECT PROPERTY MARKERS, SECTION CORNERS, SURVEY MARKS AND CITY BENCH MARKS, SUCH AS STONES, PIPES, OR OTHER MONUMENTS ENCOUNTERED. IF THE CONTRACTOR MUST RELOCATE THE PROPERTY MARKERS OR MONUMENTS THEIR LOCATION SHALL BE REFERENCED BY A REGISTERED LAND SURVEYOR AND THE OWNER NOTIFIED BEFORE MOVING. ALL PROPERTY MARKERS AND MONUMENTS RELOCATED DURING CONSTRUCTION SHALL BE RE-ESTABLISHED BY A REGISTERED LAND SURVEYOR AT THE CONTRACTOR'S EXPENSE.

5. IT IS THE RESPONSIBILITY OF THE CONTRACTOR TO INSPECT EACH DAY AND REMOVE ALL MUD, DIRT, GRAVEL AND LOOSE MATERIALS TRACKED, DUMPED, SPILLED OR WIND BLOWN FROM THE SITE ON TO OTHER SITES, RIGHT-OF-WAYS, PUBLIC OR PRIVATE STREETS, DRIVEWAYS, YARDS, OR SIDEWALKS. THE CONTRACTOR MUST CLEAN DAILY IF NECESSARY.

6. ROADWAY SURFACING AND BASE MATERIALS, OR ANY OTHER PROPERTY REMOVED OR DAMAGED, SHALL BE REPLACED OR REPAIRED AS PROVIDED FOR IN THE SPECIFICATIONS OR OTHER CONTRACT DOCUMENTS.

7. THE CONTRACTOR SHALL BE RESPONSIBLE TO PROVIDE AT HIS EXPENSE ALL AUTOMOBILE AND PEDESTRIAN TRAFFIC CONTROL DEVICES REQUIRED BY FEDERAL, STATE, COUNTY, CITY OR LOCAL AGENCIES. EVERY EFFORT SHALL BE MADE BY THE CONTRACTOR TO PROVIDE FOR ACCESS TO THE RESIDENCES ACROSS THE WORK AREA.

8. INFORMATION ON DETAIL DRAWINGS TAKES PRIORITY OVER ALL GENERAL DRAWINGS AND SCHEDULES. CONFLICTS SHALL BE RESOLVED ACCORDINGLY, PRIOR TO ANY CONSTRUCTION OR INSTALLATION. EXACT BUILDING DIMENSIONS SHALL BE VERIFIED WITH ARCHITECTURAL PLANS BY CONTRACTOR.

9. WHEN CONNECTIONS ARE TO BE MADE TO EXISTING PIPING AND STRUCTURES OR WHERE CONSTRUCTION IS IN THE VICINITY OF EXISTING PIPING THE LOCATION AND ELEVATION OF THE EXISTING PIPING SHALL BE FIELD VERIFIED AND NOTIFICATION GIVEN TO THE OWNER IF THE EXISTING PIPING IS FOUND TO BE DIFFERENT THAN THAT SHOWN ON THE DRAWINGS.

10. WHERE CONNECTIONS ARE MADE TO EXISTING MANHOLES OR BOX INLETS, THAT STRUCTURE SHALL BE REHABILITATED. THIS REHABILITATION SHALL INCLUDE THE INSTALLATION OF BENCH WALLS, AS WELL AS PRESCRIBED MEASURES TO ELIMINATE THE POTENTIAL FOR MIGRATION OF BACKFILL MATERIALS INTO THE STORMWATER SYSTEM.

11. FOR CLARITY OF THESE DRAWINGS, PIPES AND STRUCTURES MAY NOT BE DRAWN TO SCALE OR EXACTLY LOCATED.

12. THE CONTRACTOR SHALL VERIFY ALL DIMENSIONS AND ELEVATIONS IN THE FIELD PRIOR TO THE START OF CONSTRUCTION. THE CONTRACTOR SHALL BE RESPONSIBLE FOR ALL FIELD DIMENSIONS AND ELEVATIONS DURING THE ENTIRE CONSTRUCTION SCHEDULE. IF ANY DISCREPANCIES ARE FOUND IN THESE ENGINEERING PLANS FROM ACTUAL FIELD DIMENSIONS, THE CONTRACTOR SHALL CONTACT THE ENGINEER IMMEDIATELY.

13. ALL CONSTRUCTION METHODS AND MATERIALS MUST CONFORM TO CURRENT STANDARDS AND SPECIFICATIONS OF THE FEDERAL, STATE, COUNTY, CITY OR LOCAL REQUIREMENTS, WHICHEVER HAS JURISDICTION.

14. ALL PARKING STRIPES ARE TO BE 4" PAINTED WHITE. UNLESS OTHERWISE NOTED ON THE PLANS, DETAILS, OR SPECIFICATIONS.

15. ALL DIMENSIONS ARE TO EDGE OF PAVEMENT OR FACE OF CURB, UNLESS DIMENSIONS ARE AT THE PERIMETER TO SHOW SETBACKS, WHERE APPLICABLE.

16. ALL DIMENSIONS ARE TO OUTSIDE FACE OF BRICK OR FACING MATERIAL, WHERE APPLICABLE.

17. PROVIDE SMOOTH TRANSITION FROM NEWLY PAVED AREAS TO EXISTING AREAS AS NECESSARY. ALL AREAS WHERE PROPOSED PAVEMENT MEETS EXISTING PAVEMENT, THE EXISTING EDGE OF PAVEMENT SHALL BE FREE OF ALL LOOSE DEBRIS. THE EDGE OF EXISTING ASPHALT PAVEMENT SHALL BE PROPERLY SEALED WITH A TACK COAT MATERIAL IN ALL AREAS WHERE NEW ASPHALT PAVEMENT IS INDICATED TO JOIN EXISTING.

18. ALL EXCAVATED AREAS TO BE SEEDED AND/OR SODDED AFTER FINISH GRADING UNLESS OTHERWISE NOTED. ALL NEWLY SODDED/SEEDED AREAS SHALL HAVE A MINIMUM OF 4" OF TOPSOIL. CONTRACTOR TO SUPPLY STRAW MULCH WHERE GRASS SEED HAS BEEN PLANTED.

19. RESURFACE OR RECONSTRUCT AT LEAST TO ORIGINAL CONDITIONS ALL AREAS WHERE TRAFFIC BY CONTRACTOR, SUBCONTRACTORS OR SUPPLIERS HAVE DAMAGED EXISTING PAVEMENT, LAWNS OR OTHER IMPROVEMENTS DURING CONSTRUCTION, AFTER CONSTRUCTION WORK IS COMPLETE.

20. ALL UTILITY TRENCHES WITHIN 5 FEET OF PAVEMENT SHALL BE COMPLETELY BACK FILLED WITH GRANULAR BACK FILL.

21. ALL RADII INDICATED SHALL BE CONSTRUCTED AS CIRCULAR ARCS.

22. ALL ADA RAMPS AND SIGNAGE SHALL BE IN ACCORDANCE WITH FEDERAL, STATE, COUNTY OR LOCAL CODE WHICHEVER HAD JURISDICTION. CONTRACTOR SHALL CONFIRM ALL REQUIREMENTS PRIOR TO ANY INSTALLATION. SEE PLAN FOR LOCATIONS.

23. ALL DIMENSIONS ARE PARALLEL AND PERPENDICULAR TO BASE LINES, PROPERTY LINES OR BUILDING LINES UNLESS OTHERWISE NOTED.

24. EXPANSION JOINTS ARE TO BE PLACED AT ALL WALK INTERSECTIONS AND BETWEEN WALKS AND PLATFORMS. SIDEWALK SCORES ARE TO BE EQUALLY SPACED BETWEEN EXPANSION JOINTS. CONTRACTIOION JOINTS AND PERPENDICULAR SIDEWALKS AT 5' INTERVALS OR LESS WITH A CONTRACTION JOINT EVERY 20' OR LESS.

25. EXPANSION JOINTS ARE TO BE PLACED EVERY 20' ALONG CURBS.

26. THIS PROJECT SHALL MEET A.D.A. REQUIREMENT

811 Know what's below. Call before you dig.

IUPPS Dig Safely.
Indiana Underground Plant Protection Service

| DATE | MARK | REVISIONS | BY |
|---|---|---|---|

DAVID J. STOEPPELWERTH
REGISTERED No. 19358 STATE OF INDIANA PROFESSIONAL ENGINEER

THIS DRAWING IS NOT INTENDED TO BE REPRESENTED AS A RETRACEMENT OR ORIGINAL BOUNDARY SURVEY, A ROUTE SURVEY, OR A SURVEYOR LOCATION REPORT.

CERTIFIED: 2/1/12


STOEPPELWERTH & ASSOCIATES
7965 East 106th Street, Fishers, IN 46038-2505
phone: 317.849.5935 fax: 317.849.5942


SITE PLAN
BRIDGEWATER APARTMENTS
HAMILTON COUNTY, INDIANA
WESTFIELD

DRAWN BY: KRG
CHECKED BY: BKR
SHEET NO. C200
S & A JOB NO. 56030JUSL1

S:\56030JUS-L1\DWG\C200-Site Plan.dwg, 1/29/2013 12:33:48 PM, KGilson, 1:1

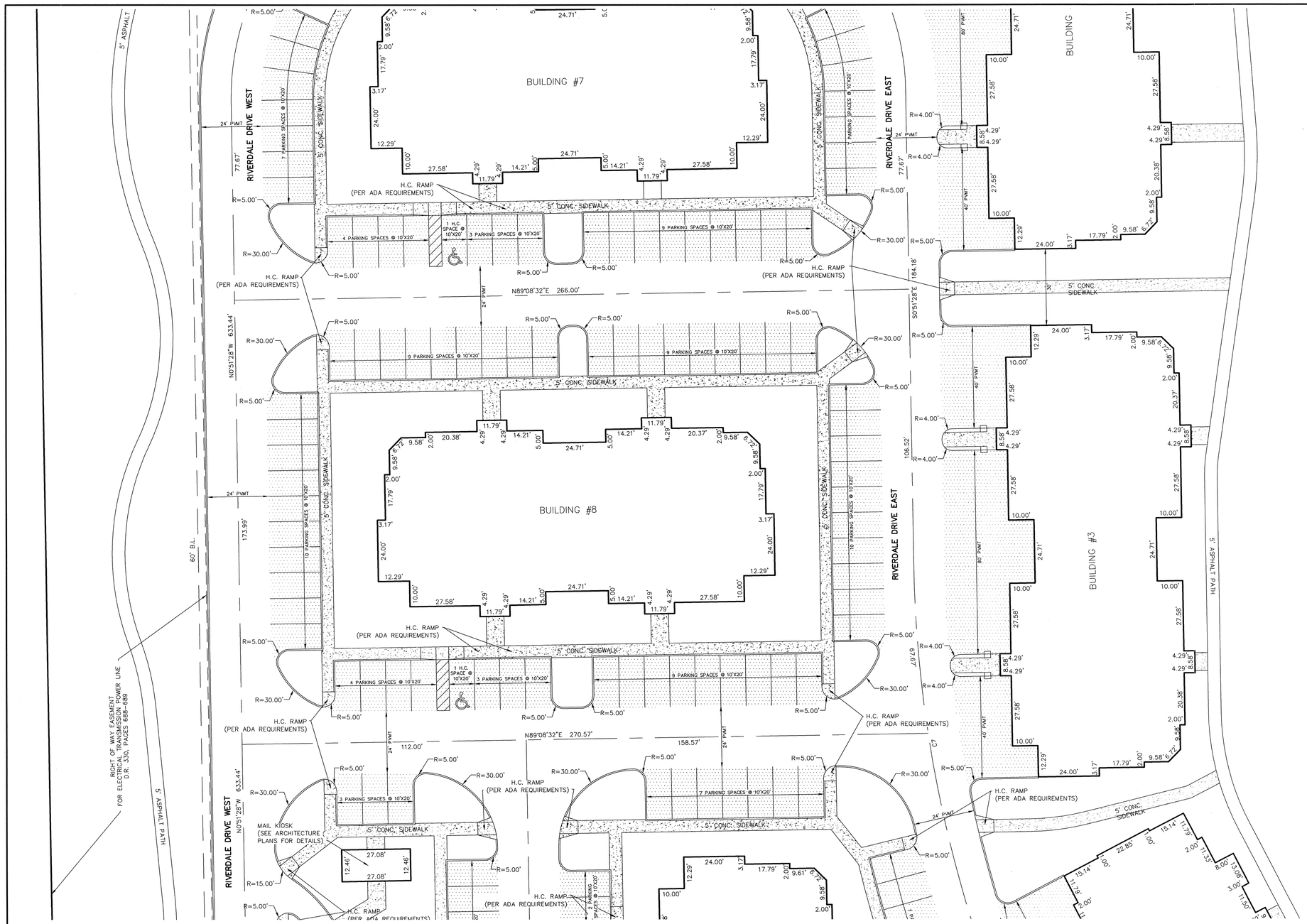


GRAPHIC SCALE

20 0 10 20

( IN FEET )
1 inch = 20 ft.

## LEGEND

| | |
|---|---|
| B.L. | BUILDING LINE |
| D.U.&S.E. | DRAINAGE UTILITY & STORM EASEMENT |
| D.E. | DRAINAGE EASEMENT |
| U.E. | UTILITY EASEMENT |
| L.M.A.E. | LANDSCAPE MAINTENANCE ACCESS EASEMENT |
| R= | RADIUS |
| H.C. | HANDICAP |
| CONC. | CONCRETE |
| | PROPOSED CONCRETE |
| | LIGHT DUTY ASPHALT DRIVE AREA (SEE DETAIL C802) |
| | HEAVY DUTY ASPHALT DRIVE AREA (SEE DETAIL C802) |

262 PARKING SPACES
120 CAR GARAGE UNITS
6 H.C. SPACES
1 VAN ACCESSIBLE SPACE
509 SPACES TOTAL

REQUIRED PARKING SPACES = 480

240 UNITS TOTAL

CENTERLINE CURVE DATA

| CURVE | RADIUS | LENGTH | TANGENT | CHORD | CHORD BEARING | DELTA |
|---|---|---|---|---|---|---|
| C1 | 100.00' | 49.49' | 25.26' | 48.99' | S65°44'45"W | 28°21'27" |
| C2 | 100.00' | 49.49' | 25.26' | 48.99' | S65°44'45"W | 28°21'27" |
| C3 | 150.00' | 209.81' | 126.18' | 193.12' | N88°21'46"W | 80°08'26" |
| C4 | 100.00' | 82.79' | 43.93' | 80.44' | N24°34'30"W | 47°26'04" |
| C5 | 100.00' | 157.08' | 100.00' | 141.42' | N44°08'32"E | 90°00'00" |
| C6 | 100.00' | 157.08' | 100.00' | 141.42' | S45°51'28"E | 90°00'00" |
| C7 | 500.00' | 327.90' | 170.09' | 322.06' | S19°38'43"E | 37°34'30" |
| C8 | 50.00' | 45.19' | 24.27' | 43.67' | S64°19'33"E | 51°47'09" |
| C9 | 25.00' | 19.63' | 10.36' | 19.13' | S15°55'59"E | 45°00'00" |
| C10 | 25.00' | 19.63' | 10.36' | 19.13' | S29°04'01"W | 45°00'00" |
| C11 | 32.00' | 50.25' | 31.98' | 45.24' | N44°07'28"E | 89°57'53" |

1. THE UTILITIES SHOWN ON THESE PLANS AND ON THE TOPOGRAPHICAL SURVEY MAY NOT BE A COMPLETE REPRESENTATION OF THE EXISTING UTILITIES ON AND AROUND THE SITE. THE LOCATION AND SIZE OF THESE UTILITIES MAY BE APPROXIMATE. THE ENGINEER AND/OR SURVEYOR
SHALL NOT BE HELD LIABLE FOR ANY INACCURATE UTILITY INFORMATION INDICATED, IMPLIED, OR NOT SHOWN.

2. THE CONTRACTOR SHALL BE RESPONSIBLE FOR LOCATING AND MAINTAINING IN SERVICE ALL EXISTING UTILITIES ENCOUNTERED DURING CONSTRUCTION UNLESS OTHERWISE INDICATED IN THE DRAWINGS. ANY PIPING, WHICH CAN BE REMOVED DURING CONSTRUCTION WITHOUT UNDUE INTERRUPTION OF SERVICE MAY BE REMOVED AND REPLACED BY THE CONTRACTOR, AT HIS EXPENSE WITH THE PERMISSION OF THE OWNER.

3. BEFORE WORKING WITH OR AROUND EXISTING UTILITIES, THE APPLICABLE UTILITY COMPANY SHALL BE CONTACTED BY THE CONTRACTOR.

4. THE CONTRACTOR SHALL PRESERVE AND PROTECT PROPERTY MARKERS, SECTION CORNERS, SURVEY MARKS AND CITY BENCH MARKS, SUCH AS STONES, PIPES, OR OTHER MONUMENTS ENCOUNTERED. IF THE CONTRACTOR MUST RELOCATE THE PROPERTY MARKERS OR MONUMENTS THEIR LOCATION SHALL BE REFERENCED BY A REGISTERED LAND SURVEYOR AND THE OWNER NOTIFIED BEFORE MOVING. ALL PROPERTY MARKERS AND MONUMENTS RELOCATED DURING CONSTRUCTION SHALL BE RE-ESTABLISHED BY A REGISTERED LAND SURVEYOR AT THE CONTRACTOR'S EXPENSE.

5. IT IS THE RESPONSIBILITY OF THE CONTRACTOR TO INSPECT EACH DAY AND REMOVE ALL MUD, DIRT, GRAVEL AND LOOSE MATERIALS TRACKED, DUMPED, SPILLED OR WIND BLOWN FROM THE SITE ON TO OTHER SITES, RIGHT-OF-WAYS, PUBLIC OR PRIVATE STREETS, DRIVEWAYS, YARDS, OR SIDEWALKS. THE CONTRACTOR MUST CLEAN DAILY IF NECESSARY.

6. ROADWAY SURFACING AND BASE MATERIALS, OR ANY OTHER PROPERTY REMOVED OR DAMAGED, SHALL BE REPLACED OR REPAIRED AS PROVIDED FOR IN THE SPECIFICATIONS OR OTHER CONTRACT DOCUMENTS.

7. THE CONTRACTOR SHALL BE RESPONSIBLE TO PROVIDE AT HIS EXPENSE ALL AUTOMOBILE AND PEDESTRIAN TRAFFIC CONTROL DEVICES REQUIRED BY FEDERAL, STATE, COUNTY, CITY OR LOCAL AGENCIES. EVERY EFFORT SHALL BE MADE BY THE CONTRACTOR TO PROVIDE FOR ACCESS TO THE RESIDENCES ACROSS THE WORK AREA.

8. INFORMATION ON DETAIL DRAWINGS TAKES PRIORITY OVER ALL GENERAL DRAWINGS AND SCHEDULES. CONFLICTS SHALL BE RESOLVED ACCORDINGLY, PRIOR TO ANY CONSTRUCTION OR INSTALLATION. EXACT BUILDING DIMENSIONS SHALL BE VERIFIED WITH ARCHITECTURAL PLANS BY CONTRACTOR.

9. WHEN CONNECTIONS ARE TO BE MADE TO EXISTING PIPING AND STRUCTURES OR WHERE CONSTRUCTION IS IN THE VICINITY OF EXISTING PIPING
THE LOCATION AND ELEVATION OF THE EXISTING PIPING SHALL BE FIELD VERIFIED AND NOTIFICATION GIVEN TO THE OWNER IF THE EXISTING
PIPING IS FOUND TO BE DIFFERENT THAN THAT SHOWN ON THE DRAWINGS.

10. WHERE CONNECTIONS ARE MADE TO EXISTING MANHOLES OR BOX INLETS, THAT STRUCTURE SHALL BE REHABILITATED. THIS REHABILITATION SHALL INCLUDE THE INSTALLATION OF BENCH WALLS, AS WELL AS PRESCRIBED MEASURES TO ELIMINATE THE POTENTIAL FOR MIGRATION OF BACKFILL MATERIALS INTO THE STORMWATER SYSTEM.

11. FOR CLARITY OF THESE DRAWINGS, PIPES AND STRUCTURES MAY NOT BE DRAWN TO SCALE OR EXACTLY LOCATED.

12. THE CONTRACTOR SHALL VERIFY ALL DIMENSIONS AND ELEVATIONS IN THE FIELD PRIOR TO THE START OF CONSTRUCTION. THE CONTRACTOR SHALL BE RESPONSIBLE FOR ALL FIELD DIMENSIONS AND ELEVATIONS DURING THE ENTIRE CONSTRUCTION SCHEDULE. IF ANY DISCREPANCIES ARE FOUND IN THESE ENGINEERING PLANS FROM ACTUAL FIELD DIMENSIONS, THE CONTRACTOR SHALL CONTACT THE ENGINEER IMMEDIATELY.

13. ALL CONSTRUCTION METHODS AND MATERIALS MUST CONFORM TO CURRENT STANDARDS AND SPECIFICATIONS OF THE FEDERAL, STATE, COUNTY, CITY OR LOCAL REQUIREMENTS, WHICHEVER HAS JURISDICTION.

14. ALL PARKING STRIPES ARE TO BE 4" PAINTED WHITE. UNLESS OTHERWISE NOTED ON THE PLANS, DETAILS, OR SPECIFICATIONS.

15. ALL DIMENSIONS ARE TO EDGE OF PAVEMENT OR FACE OF CURB, UNLESS DIMENSIONS ARE AT THE PERIMETER TO SHOW SETBACKS, WHERE APPLICABLE.

16. ALL DIMENSIONS ARE TO OUTSIDE FACE OF BRICK OR FACING MATERIAL, WHERE APPLICABLE.

17. PROVIDE SMOOTH TRANSITION FROM NEWLY PAVED AREAS TO EXISTING AREAS AS NECESSARY. ALL AREAS WHERE PROPOSED PAVEMENT MEETS EXISTING PAVEMENT, THE EXISTING EDGE OF PAVEMENT SHALL BE FREE OF ALL LOOSE DEBRIS. THE EDGE OF EXISTING ASPHALT PAVEMENT SHALL BE PROPERLY SEALED WITH A TACK COAT MATERIAL IN ALL AREAS WHERE NEW ASPHALT PAVEMENT IS INDICATED TO JOIN EXISTING.

18. ALL EXCAVATED AREAS TO BE SEEDED AND/OR SODDED AFTER FINISH GRADING UNLESS OTHERWISE NOTED. ALL NEWLY SODDED/SEEDED AREAS SHALL HAVE A MINIMUM OF 4" OF TOPSOIL. CONTRACTOR TO SUPPLY STRAW MULCH WHERE GRASS SEED HAS BEEN PLANTED.

19. RESURFACE OR RECONSTRUCT AT LEAST TO ORIGINAL CONDITIONS ALL AREAS WHERE TRAFFIC BY CONTRACTOR, SUBCONTRACTORS OR SUPPLIERS HAVE DAMAGED EXISTING PAVEMENT, LAWNS OR OTHER IMPROVEMENTS DURING CONSTRUCTION, AFTER CONSTRUCTION WORK IS COMPLETE.

20. ALL UTILITY TRENCHES WITHIN 5 FEET OF PAVEMENT SHALL BE COMPLETELY BACK FILLED WITH GRANULAR BACK FILL.

21. ALL RADII INDICATED SHALL BE CONSTRUCTED AS CIRCULAR ARCS.

22. ALL ADA RAMPS AND SIGNAGE SHALL BE IN ACCORDANCE WITH FEDERAL, STATE, COUNTY OR LOCAL CODE WHICHEVER HAD JURISDICTION. CONTRACTOR SHALL CONFIRM ALL REQUIREMENTS PRIOR TO ANY INSTALLATION. SEE PLAN FOR LOCATIONS.

23. ALL DIMENSIONS ARE PARALLEL AND PERPENDICULAR TO BASE LINES, PROPERTY LINES OR BUILDING LINES UNLESS OTHERWISE NOTED.

24. EXPANSION JOINTS ARE TO BE PLACED AT ALL WALK INTERSECTIONS AND BETWEEN WALKS AND PLATFORMS. SIDEWALK SCORES ARE TO BE EQUALLY SPACED BETWEEN EXPANSION JOINTS. CONTRACTIOION JOINTS AND PERPENDICULAR SIDEWALKS AT 5' INTERVALS OR LESS WITH A CONTRACTION JOINT EVERY 20' OR LESS.

25. EXPANSION JOINTS ARE TO BE PLACED EVERY 20' ALONG CURBS.

26. THIS PROJECT SHALL MEET A.D.A. REQUIREMENT

811 Know what's below. Call before you dig.

IUPPS Dig Safely. Indiana Underground Plant Protection Service

| DATE | MARK | REVISIONS | BY |
|---|---|---|---|

DAVID J. STOEPPELWERTH REGISTERED No. 19358 STATE OF INDIANA PROFESSIONAL ENGINEER

THIS DRAWING IS NOT INTENDED TO BE REPRESENTED AS A RETRACEMENT OR ORIGINAL BOUNDARY SURVEY, A ROUTE SURVEY, OR A SURVEYOR LOCATION REPORT.

CERTIFIED: 2/1/12


STOEPPELWERTH & ALWAYSON
7965 East 106th Street, Fishers, IN 46038-2505
phone: 317.849.5935 fax: 317.849.5942


# SITE PLAN
# BRIDGEWATER APARTMENTS

HAMILTON COUNTY, INDIANA

WESTFIELD

DRAWN BY: KRG
CHECKED BY: BKR
SHEET NO. C201
S & A JOB NO. 56030JUSL1

S:\56030JUS-L1\DWG\C201-Site Plan.dwg, 1/29/2013 12:38:35 PM, KGilson, 1:1

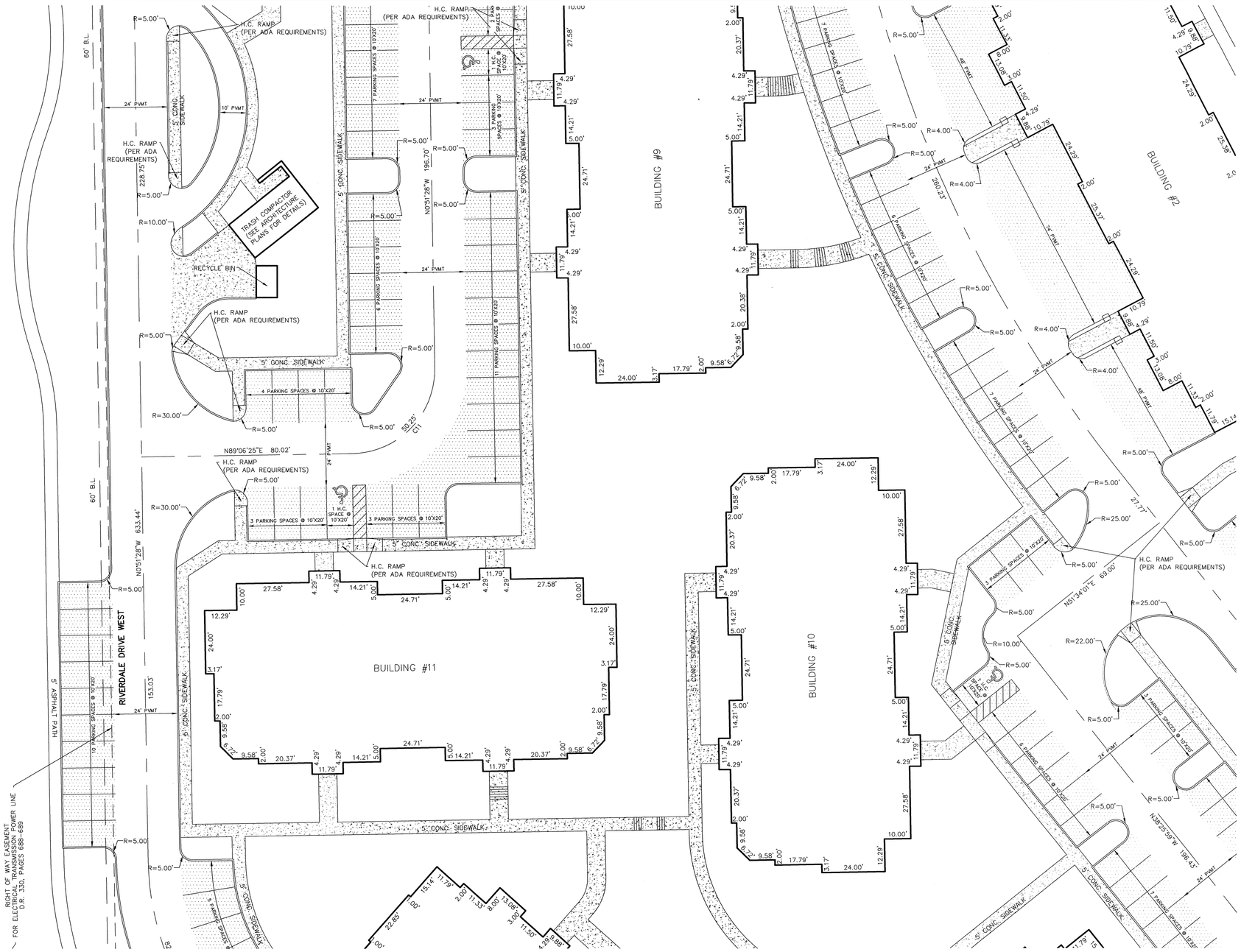


GRAPHIC SCALE

20 0 10 20

( IN FEET )
1 inch = 20 ft.

## LEGEND

| | |
|---|---|
| B.L. | BUILDING LINE |
| D.U.&S.E. | DRAINAGE UTILITY & STORM EASEMENT |
| D.E. | DRAINAGE EASEMENT |
| U.E. | UTILITY EASEMENT |
| L.M.A.E. | LANDSCAPE MAINTENANCE ACCESS EASEMENT |
| R= | RADIUS |
| H.C. | HANDICAP |
| CONC. | CONCRETE |
| | PROPOSED CONCRETE |
| | LIGHT DUTY ASPHALT DRIVE AREA (SEE DETAIL C802) |
| | HEAVY DUTY ASPHALT DRIVE AREA (SEE DETAIL C802) |

262 PARKING SPACES
120 CAR GARAGE UNITS
6 H.C. SPACES
1 VAN ACCESSIBLE SPACE
509 SPACES TOTAL

REQUIRED PARKING SPACES = 480

240 UNITS TOTAL

CENTERLINE CURVE DATA

| CURVE | RADIUS | LENGTH | TANGENT | CHORD | CHORD BEARING | DELTA |
|---|---|---|---|---|---|---|
| C1 | 100.00' | 49.49' | 25.26' | 48.99' | S65°44'45"W | 28°21'27" |
| C2 | 100.00' | 49.49' | 25.26' | 48.99' | S65°44'45"W | 28°21'27" |
| C3 | 150.00' | 209.81' | 126.18' | 193.12' | N88°21'46"W | 80°08'26" |
| C4 | 100.00' | 82.79' | 43.93' | 80.44' | N24°34'30"W | 47°26'04" |
| C5 | 100.00' | 157.08' | 100.00' | 141.42' | N44°08'32"E | 90°00'00" |
| C6 | 100.00' | 157.08' | 100.00' | 141.42' | S45°51'28"E | 90°00'00" |
| C7 | 500.00' | 327.90' | 170.09' | 322.06' | S19°38'43"E | 37°34'30" |
| C8 | 50.00' | 45.19' | 24.27' | 43.67' | S64°19'33"E | 51°47'09" |
| C9 | 25.00' | 19.63' | 10.36' | 19.13' | S15°55'59"E | 45°00'00" |
| C10 | 25.00' | 19.63' | 10.36' | 19.13' | S29°04'01"W | 45°00'00" |
| C11 | 32.00' | 50.25' | 31.98' | 45.24' | N44°07'28"E | 89°57'53" |

1. THE UTILITIES SHOWN ON THESE PLANS AND ON THE TOPOGRAPHICAL SURVEY MAY NOT BE A COMPLETE REPRESENTATION OF THE EXISTING UTILITIES ON AND AROUND THE SITE. THE LOCATION AND SIZE OF THESE UTILITIES MAY BE APPROXIMATE. THE ENGINEER AND/OR SURVEYOR SHALL NOT BE HELD LIABLE FOR ANY INACCURATE UTILITY INFORMATION INDICATED, IMPLIED, OR NOT SHOWN.

2. THE CONTRACTOR SHALL BE RESPONSIBLE FOR LOCATING AND MAINTAINING IN SERVICE ALL EXISTING UTILITIES ENCOUNTERED DURING CONSTRUCTION UNLESS OTHERWISE INDICATED IN THE DRAWINGS. ANY PIPING, WHICH CAN BE REMOVED DURING CONSTRUCTION WITHOUT UNDUE INTERRUPTION OF SERVICE MAY BE REMOVED AND REPLACED BY THE CONTRACTOR, AT HIS EXPENSE WITH THE PERMISSION OF THE OWNER.

3. BEFORE WORKING WITH OR AROUND EXISTING UTILITIES, THE APPLICABLE UTILITY COMPANY SHALL BE CONTACTED BY THE CONTRACTOR.

4. THE CONTRACTOR SHALL PRESERVE AND PROTECT PROPERTY MARKERS, SECTION CORNERS, SURVEY MARKS AND CITY BENCH MARKS, SUCH AS STONES, PIPES, OR OTHER MONUMENTS ENCOUNTERED. IF THE CONTRACTOR MUST RELOCATE THE PROPERTY MARKERS OR MONUMENTS THEIR LOCATION SHALL BE REFERENCED BY A REGISTERED LAND SURVEYOR AND THE OWNER NOTIFIED BEFORE MOVING. ALL PROPERTY MARKERS AND MONUMENTS RELOCATED DURING CONSTRUCTION SHALL BE RE-ESTABLISHED BY A REGISTERED LAND SURVEYOR AT THE CONTRACTOR'S EXPENSE.

5. IT IS THE RESPONSIBILITY OF THE CONTRACTOR TO INSPECT EACH DAY AND REMOVE ALL MUD, DIRT, GRAVEL AND LOOSE MATERIALS TRACKED, DUMPED, SPILLED OR WIND BLOWN FROM THE SITE ON TO OTHER SITES, RIGHT-OF-WAYS, PUBLIC OR PRIVATE STREETS, DRIVEWAYS, YARDS, OR SIDEWALKS. THE CONTRACTOR MUST CLEAN DAILY IF NECESSARY.

6. ROADWAY SURFACING AND BASE MATERIALS, OR ANY OTHER PROPERTY REMOVED OR DAMAGED, SHALL BE REPLACED OR REPAIRED AS PROVIDED FOR IN THE SPECIFICATIONS OR OTHER CONTRACT DOCUMENTS.

7. THE CONTRACTOR SHALL BE RESPONSIBLE TO PROVIDE AT HIS EXPENSE ALL AUTOMOBILE AND PEDESTRIAN TRAFFIC CONTROL DEVICES REQUIRED BY FEDERAL, STATE, COUNTY, CITY OR LOCAL AGENCIES. EVERY EFFORT SHALL BE MADE BY THE CONTRACTOR TO PROVIDE FOR ACCESS TO THE RESIDENCES ACROSS THE WORK AREA.

8. INFORMATION ON DETAIL DRAWINGS TAKES PRIORITY OVER ALL GENERAL DRAWINGS AND SCHEDULES. CONFLICTS SHALL BE RESOLVED ACCORDINGLY, PRIOR TO ANY CONSTRUCTION OR INSTALLATION. EXACT BUILDING DIMENSIONS SHALL BE VERIFIED WITH ARCHITECTURAL PLANS BY CONTRACTOR.

9. WHEN CONNECTIONS ARE TO BE MADE TO EXISTING PIPING AND STRUCTURES OR WHERE CONSTRUCTION IS IN THE VICINITY OF EXISTING PIPING THE LOCATION AND ELEVATION OF THE EXISTING PIPING SHALL BE FIELD VERIFIED AND NOTIFICATION GIVEN TO THE OWNER IF THE EXISTING PIPING IS FOUND TO BE DIFFERENT THAN THAT SHOWN ON THE DRAWINGS.

10. WHERE CONNECTIONS ARE MADE TO EXISTING MANHOLES OR BOX INLETS, THAT STRUCTURE SHALL BE REHABILITATED. THIS REHABILITATION SHALL INCLUDE THE INSTALLATION OF BENCH WALLS, AS WELL AS PRESCRIBED MEASURES TO ELIMINATE THE POTENTIAL FOR MIGRATION OF BACKFILL MATERIALS INTO THE STORMWATER SYSTEM.

11. FOR CLARITY OF THESE DRAWINGS, PIPES AND STRUCTURES MAY NOT BE DRAWN TO SCALE OR EXACTLY LOCATED.

12. THE CONTRACTOR SHALL VERIFY ALL DIMENSIONS AND ELEVATIONS IN THE FIELD PRIOR TO THE START OF CONSTRUCTION. THE CONTRACTOR SHALL BE RESPONSIBLE FOR ALL FIELD DIMENSIONS AND ELEVATIONS DURING THE ENTIRE CONSTRUCTION SCHEDULE. IF ANY DISCREPANCIES ARE FOUND IN THESE ENGINEERING PLANS FROM ACTUAL FIELD DIMENSIONS, THE CONTRACTOR SHALL CONTACT THE ENGINEER IMMEDIATELY.

13. ALL CONSTRUCTION METHODS AND MATERIALS MUST CONFORM TO CURRENT STANDARDS AND SPECIFICATIONS OF THE FEDERAL, STATE, COUNTY, CITY OR LOCAL REQUIREMENTS, WHICHEVER HAS JURISDICTION.

14. ALL PARKING STRIPES ARE TO BE 4" PAINTED WHITE. UNLESS OTHERWISE NOTED ON THE PLANS, DETAILS, OR SPECIFICATIONS.

15. ALL DIMENSIONS ARE TO EDGE OF PAVEMENT OR FACE OF CURB, UNLESS DIMENSIONS ARE AT THE PERIMETER TO SHOW SETBACKS, WHERE APPLICABLE.

16. ALL DIMENSIONS ARE TO OUTSIDE FACE OF BRICK OR FACING MATERIAL, WHERE APPLICABLE.

17. PROVIDE SMOOTH TRANSITION FROM NEWLY PAVED AREAS TO EXISTING AREAS AS NECESSARY. ALL AREAS WHERE PROPOSED PAVEMENT MEETS EXISTING PAVEMENT, THE EXISTING EDGE OF PAVEMENT SHALL BE FREE OF ALL LOOSE DEBRIS. THE EDGE OF EXISTING ASPHALT PAVEMENT SHALL BE PROPERLY SEALED WITH A TACK COAT MATERIAL IN ALL AREAS WHERE NEW ASPHALT PAVEMENT IS INDICATED TO JOIN EXISTING.

18. ALL EXCAVATED AREAS TO BE SEEDED AND/OR SODDED AFTER FINISH GRADING UNLESS OTHERWISE NOTED. ALL NEWLY SODDED/SEEDED AREAS SHALL HAVE A MINIMUM OF 4" OF TOPSOIL. CONTRACTOR TO SUPPLY STRAW MULCH WHERE GRASS SEED HAS BEEN PLANTED.

19. RESURFACE OR RECONSTRUCT AT LEAST TO ORIGINAL CONDITIONS ALL AREAS WHERE TRAFFIC BY CONTRACTOR, SUBCONTRACTORS OR SUPPLIERS HAVE DAMAGED EXISTING PAVEMENT, LAWNS OR OTHER IMPROVEMENTS DURING CONSTRUCTION, AFTER CONSTRUCTION WORK IS COMPLETE.

20. ALL UTILITY TRENCHES WITHIN 5 FEET OF PAVEMENT SHALL BE COMPLETELY BACK FILLED WITH GRANULAR BACK FILL.

21. ALL RADII INDICATED SHALL BE CONSTRUCTED AS CIRCULAR ARCS.

22. ALL ADA RAMPS AND SIGNAGE SHALL BE IN ACCORDANCE WITH FEDERAL, STATE, COUNTY OR LOCAL CODE WHICHEVER HAD JURISDICTION. CONTRACTOR SHALL CONFIRM ALL REQUIREMENTS PRIOR TO ANY INSTALLATION. SEE PLAN FOR LOCATIONS.

23. ALL DIMENSIONS ARE PARALLEL AND PERPENDICULAR TO BASE LINES, PROPERTY LINES OR BUILDING LINES UNLESS OTHERWISE NOTED.

24. EXPANSION JOINTS ARE TO BE PLACED AT ALL WALK INTERSECTIONS AND BETWEEN WALKS AND PLATFORMS. SIDEWALK SCORES ARE TO BE EQUALLY SPACED BETWEEN EXPANSION JOINTS. CONTRACTIOION JOINTS AND PERPENDICULAR SIDEWALKS AT 5' INTERVALS OR LESS WITH A CONTRACTION JOINT EVERY 20' OR LESS.

25. EXPANSION JOINTS ARE TO BE PLACED EVERY 20' ALONG CURBS.

26. THIS PROJECT SHALL MEET A.D.A. REQUIREMENT

811 Know what's below. Call before you dig.

IUPPS Dig Safely. Indiana Underground Plant Protection Service

| DATE | MARK | REVISIONS | BY |
|---|---|---|---|

DAVID J. STOEPPELWERTH REGISTERED No. 19358 STATE OF INDIANA PROFESSIONAL ENGINEER

THIS DRAWING IS NOT INTENDED TO BE REPRESENTED AS A RETRACEMENT OR ORIGINAL BOUNDARY SURVEY, A ROUTE SURVEY OR A SURVEYOR LOCATION REPORT.

CERTIFIED: 2/1/12


STOEPPELWERTH
ALWAYS ON
7965 East 106th Street, Fishers, IN 46038-2505
phone: 317.849.5935 fax: 317.849.5942


SITE PLAN

BRIDGEWATER APARTMENTS

HAMILTON COUNTY, INDIANA

WESTFIELD

DRAWN BY: KRG | CHECKED BY: BKR

SHEET NO. C202

S & A JOB NO. 56030JUSL1

S:\56030JUSL1\DWG\C202-Site Plan.dwg, 1/29/2013 12:46:17 PM, KGilson, 1:1

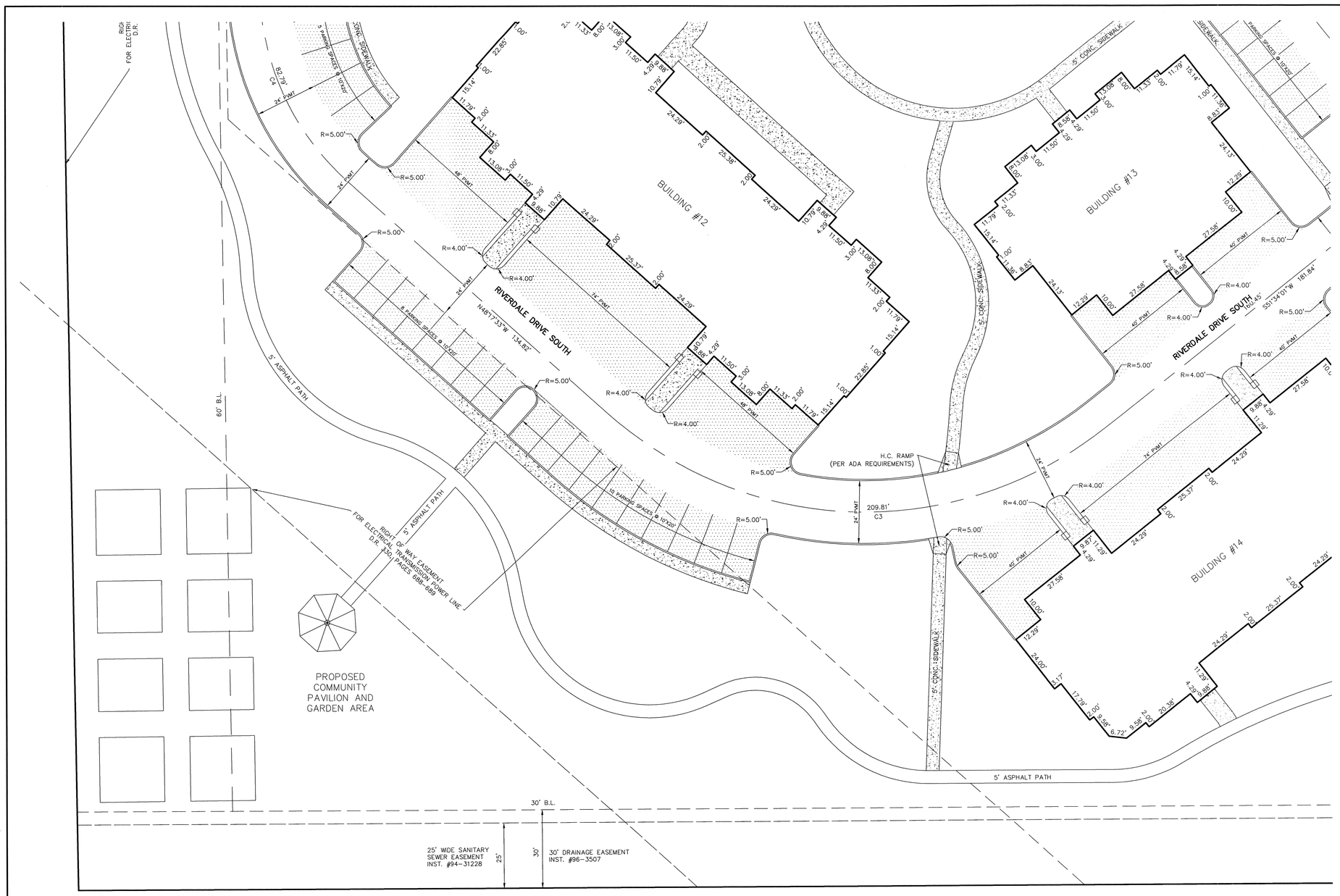


GRAPHIC SCALE

20 0 10 20

( IN FEET )
1 inch = 20 ft.

## LEGEND

| | |
|---|---|
| B.L. | BUILDING LINE |
| D.U.&S.E. | DRAINAGE UTILITY & STORM EASEMENT |
| D.E. | DRAINAGE EASEMENT |
| U.E. | UTILITY EASEMENT |
| L.M.A.E. | LANDSCAPE MAINTENANCE ACCESS EASEMENT |
| R= | RADIUS |
| H.C. | HANDICAP |
| CONC. | CONCRETE |
| | PROPOSED CONCRETE |
| | LIGHT DUTY ASPHALT DRIVE AREA (SEE DETAIL C802) |
| | HEAVY DUTY ASPHALT DRIVE AREA (SEE DETAIL C802) |

262 PARKING SPACES
120 CAR GARAGE UNITS
6 H.C. SPACES
1 VAN ACCESSIBLE SPACE
509 SPACES TOTAL

REQUIRED PARKING SPACES = 480

240 UNITS TOTAL

CENTERLINE CURVE DATA

| CURVE | RADIUS | LENGTH | TANGENT | CHORD | CHORD BEARING | DELTA |
|---|---|---|---|---|---|---|
| C1 | 100.00' | 49.49' | 25.26' | 48.99' | S65°44'45"W | 28°21'27" |
| C2 | 100.00' | 49.49' | 25.26' | 48.99' | S65°44'45"W | 28°21'27" |
| C3 | 150.00' | 209.81' | 126.18' | 193.12' | N88°21'46"W | 80°08'26" |
| C4 | 100.00' | 82.79' | 43.93' | 80.44' | N24°34'30"W | 47°26'04" |
| C5 | 100.00' | 157.08' | 100.00' | 141.42' | N44°08'32"E | 90°00'00" |
| C6 | 100.00' | 157.08' | 100.00' | 141.42' | S45°51'28"E | 90°00'00" |
| C7 | 500.00' | 327.90' | 170.09' | 322.06' | S19°38'43"E | 37°34'30" |
| C8 | 50.00' | 45.19' | 24.27' | 43.67' | S64°19'33"E | 51°47'09" |
| C9 | 25.00' | 19.63' | 10.36' | 19.13' | S15°55'59"E | 45°00'00" |
| C10 | 25.00' | 19.63' | 10.36' | 19.13' | S29°04'01"W | 45°00'00" |
| C11 | 32.00' | 50.25' | 31.98' | 45.24' | N44°07'28"E | 89°57'53" |

1. THE UTILITIES SHOWN ON THESE PLANS AND ON THE TOPOGRAPHICAL SURVEY MAY NOT BE A COMPLETE REPRESENTATION OF THE EXISTING UTILITIES ON AND AROUND THE SITE. THE LOCATION AND SIZE OF THESE UTILITIES MAY BE APPROXIMATE. THE ENGINEER AND/OR SURVEYOR SHALL NOT BE HELD LIABLE FOR ANY INACCURATE UTILITY INFORMATION INDICATED, IMPLIED, OR NOT SHOWN.

2. THE CONTRACTOR SHALL BE RESPONSIBLE FOR LOCATING AND MAINTAINING IN SERVICE ALL EXISTING UTILITIES ENCOUNTERED DURING CONSTRUCTION UNLESS OTHERWISE INDICATED IN THE DRAWINGS. ANY PIPING, WHICH CAN BE REMOVED DURING CONSTRUCTION WITHOUT UNDUE INTERRUPTION OF SERVICE MAY BE REMOVED AND REPLACED BY THE CONTRACTOR, AT HIS EXPENSE WITH THE PERMISSION OF THE OWNER.

3. BEFORE WORKING WITH OR AROUND EXISTING UTILITIES, THE APPLICABLE UTILITY COMPANY SHALL BE CONTACTED BY THE CONTRACTOR.

4. THE CONTRACTOR SHALL PRESERVE AND PROTECT PROPERTY MARKERS, SECTION CORNERS, SURVEY MARKS AND CITY BENCH MARKS, SUCH AS STONES, PIPES, OR OTHER MONUMENTS ENCOUNTERED. IF THE CONTRACTOR MUST RELOCATE THE PROPERTY MARKERS OR MONUMENTS THEIR LOCATION SHALL BE REFERENCED BY A REGISTERED LAND SURVEYOR AND THE OWNER NOTIFIED BEFORE MOVING. ALL PROPERTY MARKERS AND MONUMENTS RELOCATED DURING CONSTRUCTION SHALL BE RE-ESTABLISHED BY A REGISTERED LAND SURVEYOR AT THE CONTRACTOR'S EXPENSE.

5. IT IS THE RESPONSIBILITY OF THE CONTRACTOR TO INSPECT EACH DAY AND REMOVE ALL MUD, DIRT, GRAVEL AND LOOSE MATERIALS TRACKED, DUMPED, SPILLED OR WIND BLOWN FROM THE SITE ON TO OTHER SITES, RIGHT-OF-WAYS, PUBLIC OR PRIVATE STREETS, DRIVEWAYS, YARDS, OR SIDEWALKS. THE CONTRACTOR MUST CLEAN DAILY IF NECESSARY.

6. ROADWAY SURFACING AND BASE MATERIALS, OR ANY OTHER PROPERTY REMOVED OR DAMAGED, SHALL BE REPLACED OR REPAIRED AS PROVIDED FOR IN THE SPECIFICATIONS OR OTHER CONTRACT DOCUMENTS.

7. THE CONTRACTOR SHALL BE RESPONSIBLE TO PROVIDE AT HIS EXPENSE ALL AUTOMOBILE AND PEDESTRIAN TRAFFIC CONTROL DEVICES REQUIRED BY FEDERAL, STATE, COUNTY, CITY OR LOCAL AGENCIES. EVERY EFFORT SHALL BE MADE BY THE CONTRACTOR TO PROVIDE FOR ACCESS TO THE RESIDENCES ACROSS THE WORK AREA.

8. INFORMATION ON DETAIL DRAWINGS TAKES PRIORITY OVER ALL GENERAL DRAWINGS AND SCHEDULES. CONFLICTS SHALL BE RESOLVED ACCORDINGLY, PRIOR TO ANY CONSTRUCTION OR INSTALLATION. EXACT BUILDING DIMENSIONS SHALL BE VERIFIED WITH ARCHITECTURAL PLANS BY CONTRACTOR.

9. WHEN CONNECTIONS ARE TO BE MADE TO EXISTING PIPING AND STRUCTURES OR WHERE CONSTRUCTION IS IN THE VICINITY OF EXISTING PIPING THE LOCATION AND ELEVATION OF THE EXISTING PIPING SHALL BE FIELD VERIFIED AND NOTIFICATION GIVEN TO THE OWNER IF THE EXISTING PIPING IS FOUND TO BE DIFFERENT THAN THAT SHOWN ON THE DRAWINGS.

10. WHERE CONNECTIONS ARE MADE TO EXISTING MANHOLES OR BOX INLETS, THAT STRUCTURE SHALL BE REHABILITATED. THIS REHABILITATION SHALL INCLUDE THE INSTALLATION OF BENCH WALLS, AS WELL AS PRESCRIBED MEASURES TO ELIMINATE THE POTENTIAL FOR MIGRATION OF BACKFILL MATERIALS INTO THE STORMWATER SYSTEM.

11. FOR CLARITY OF THESE DRAWINGS, PIPES AND STRUCTURES MAY NOT BE DRAWN TO SCALE OR EXACTLY LOCATED.

12. THE CONTRACTOR SHALL VERIFY ALL DIMENSIONS AND ELEVATIONS IN THE FIELD PRIOR TO THE START OF CONSTRUCTION. THE CONTRACTOR SHALL BE RESPONSIBLE FOR ALL FIELD DIMENSIONS AND ELEVATIONS DURING THE ENTIRE CONSTRUCTION SCHEDULE. IF ANY DISCREPANCIES ARE FOUND IN THESE ENGINEERING PLANS FROM ACTUAL FIELD DIMENSIONS, THE CONTRACTOR SHALL CONTACT THE ENGINEER IMMEDIATELY.

13. ALL CONSTRUCTION METHODS AND MATERIALS MUST CONFORM TO CURRENT STANDARDS AND SPECIFICATIONS OF THE FEDERAL, STATE, COUNTY, CITY OR LOCAL REQUIREMENTS, WHICHEVER HAS JURISDICTION.

14. ALL PARKING STRIPES ARE TO BE 4" PAINTED WHITE. UNLESS OTHERWISE NOTED ON THE PLANS, DETAILS, OR SPECIFICATIONS.

15. ALL DIMENSIONS ARE TO EDGE OF PAVEMENT OR FACE OF CURB, UNLESS DIMENSIONS ARE AT THE PERIMETER TO SHOW SETBACKS, WHERE APPLICABLE.

16. ALL DIMENSIONS ARE TO OUTSIDE FACE OF BRICK OR FACING MATERIAL, WHERE APPLICABLE.

17. PROVIDE SMOOTH TRANSITION FROM NEWLY PAVED AREAS TO EXISTING AREAS AS NECESSARY. ALL AREAS WHERE PROPOSED PAVEMENT MEETS EXISTING PAVEMENT, THE EXISTING EDGE OF PAVEMENT SHALL BE FREE OF ALL LOOSE DEBRIS. THE EDGE OF EXISTING ASPHALT PAVEMENT SHALL BE PROPERLY SEALED WITH A TACK COAT MATERIAL IN ALL AREAS WHERE NEW ASPHALT PAVEMENT IS INDICATED TO JOIN EXISTING.

18. ALL EXCAVATED AREAS TO BE SEEDED AND/OR SODDED AFTER FINISH GRADING UNLESS OTHERWISE NOTED. ALL NEWLY SODDED/SEEDED AREAS SHALL HAVE A MINIMUM OF 4" OF TOPSOIL. CONTRACTOR TO SUPPLY STRAW MULCH WHERE GRASS SEED HAS BEEN PLANTED.

19. RESURFACE OR RECONSTRUCT AT LEAST TO ORIGINAL CONDITIONS ALL AREAS WHERE TRAFFIC BY CONTRACTOR, SUBCONTRACTORS OR SUPPLIERS HAVE DAMAGED EXISTING PAVEMENT, LAWNS OR OTHER IMPROVEMENTS DURING CONSTRUCTION, AFTER CONSTRUCTION WORK IS COMPLETE.

20. ALL UTILITY TRENCHES WITHIN 5 FEET OF PAVEMENT SHALL BE COMPLETELY BACK FILLED WITH GRANULAR BACK FILL.

21. ALL RADII INDICATED SHALL BE CONSTRUCTED AS CIRCULAR ARCS.

22. ALL ADA RAMPS AND SIGNAGE SHALL BE IN ACCORDANCE WITH FEDERAL, STATE, COUNTY OR LOCAL CODE WHICHEVER HAD JURISDICTION. CONTRACTOR SHALL CONFIRM ALL REQUIREMENTS PRIOR TO ANY INSTALLATION. SEE PLAN FOR LOCATIONS.

23. ALL DIMENSIONS ARE PARALLEL AND PERPENDICULAR TO BASE LINES, PROPERTY LINES OR BUILDING LINES UNLESS OTHERWISE NOTED.

24. EXPANSION JOINTS ARE TO BE PLACED AT ALL WALK INTERSECTIONS AND BETWEEN WALKS AND PLATFORMS. SIDEWALK SCORES ARE TO BE EQUALLY SPACED BETWEEN EXPANSION JOINTS. CONTRACTIOION JOINTS AND PERPENDICULAR SIDEWALKS AT 5' INTERVALS OR LESS WITH A CONTRACTION JOINT EVERY 20' OR LESS.

25. EXPANSION JOINTS ARE TO BE PLACED EVERY 20' ALONG CURBS.

26. THIS PROJECT SHALL MEET A.D.A. REQUIREMENT

811 Know what's below. Call before you dig.

IUPPS Dig Safely.
Indiana Underground Plant Protection Service

| DATE | MARK | REVISIONS | BY |
|---|---|---|---|

DAVID J. STOEPPELWERTH
REGISTERED
No. 19358
STATE OF INDIANA
PROFESSIONAL ENGINEER

THIS DRAWING IS NOT INTENDED TO BE REPRESENTED AS A RETRACEMENT OR ORIGINAL BOUNDARY SURVEY, A ROUTE SURVEY OR A SURVEYOR LOCATION REPORT.

CERTIFIED: 2/1/12


STOEPPELWERTH
ALWAYS ON
7965 East 106th Street, Fishers, IN 46038-2505
phone: 317.849.5935 fax: 317.849.5942


# SITE PLAN
# BRIDGEWATER APARTMENTS

HAMILTON COUNTY, INDIANA
WESTFIELD

DRAWN BY: KRG
CHECKED BY: BKR
SHEET NO.
C203
S & A JOB NO.
56030JUSL1

S:\56030JUSL-L1\DWG\C203-Site Plan.dwg, 1/29/2013 12:50:30 PM, KGilson, 1:1

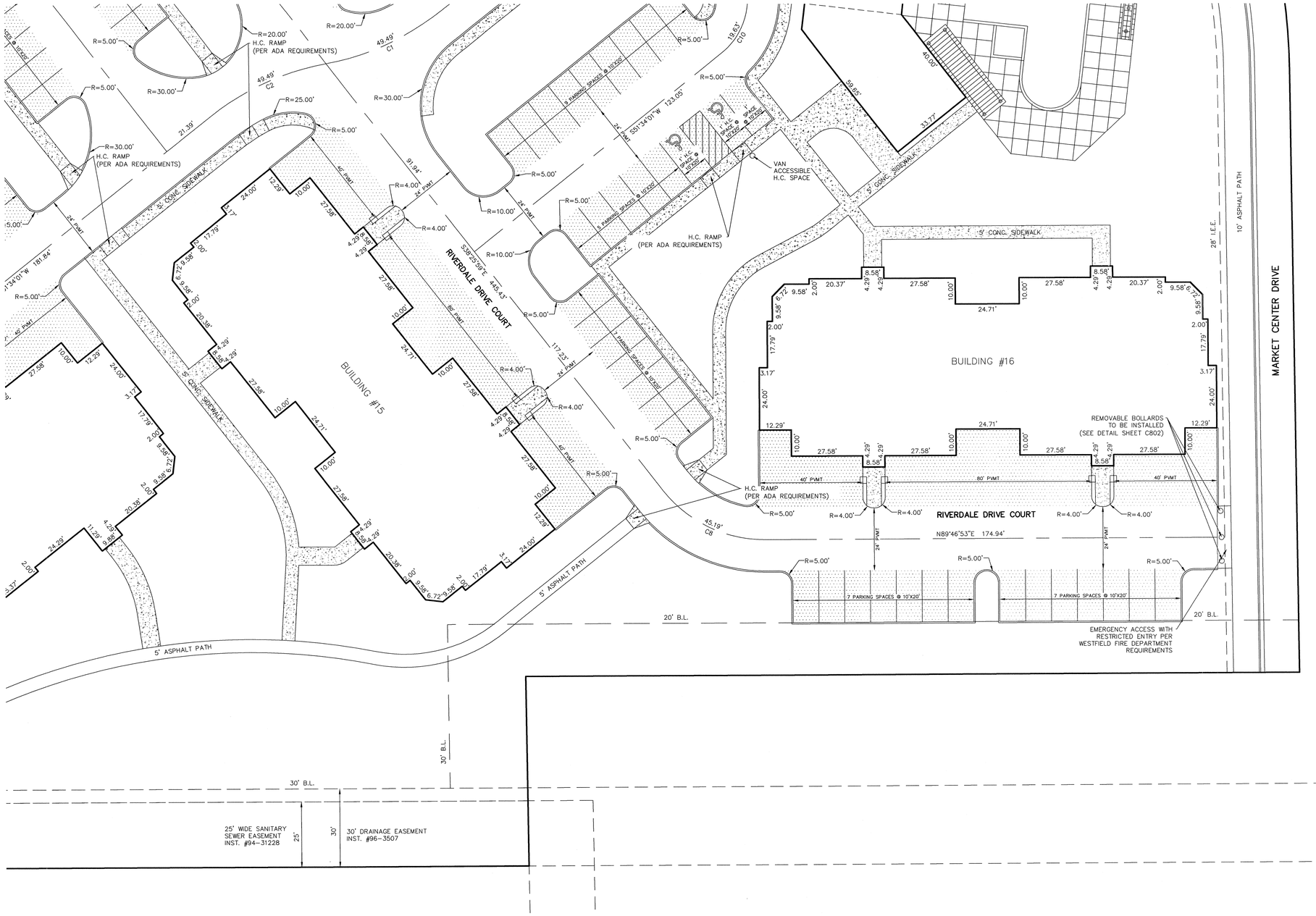


GRAPHIC SCALE

20 0 10 20

( IN FEET )
1 inch = 20 ft.

**LEGEND**

| | |
|---|---|
| B.L. | BUILDING LINE |
| D.U.&S.E. | DRAINAGE UTILITY & STORM EASEMENT |
| D.E. | DRAINAGE EASEMENT |
| U.E. | UTILITY EASEMENT |
| L.M.A.E. | LANDSCAPE MAINTENANCE ACCESS EASEMENT |
| R= | RADIUS |
| H.C. | HANDICAP |
| CONC. | CONCRETE |
| | PROPOSED CONCRETE |
| | LIGHT DUTY ASPHALT DRIVE AREA (SEE DETAIL C802) |
| | HEAVY DUTY ASPHALT DRIVE AREA (SEE DETAIL C802) |

262 PARKING SPACES
120 CAR GARAGE UNITS
6 H.C. SPACES
1 VAN ACCESSIBLE SPACE
509 SPACES TOTAL

REQUIRED PARKING SPACES = 480

240 UNITS TOTAL

CENTERLINE CURVE DATA

| CURVE | RADIUS | LENGTH | TANGENT | CHORD | CHORD BEARING | DELTA |
|---|---|---|---|---|---|---|
| C1 | 100.00' | 49.49' | 25.26' | 48.99' | S65°44'45"W | 28°21'27" |
| C2 | 100.00' | 49.49' | 25.26' | 48.99' | S65°44'45"W | 28°21'27" |
| C3 | 150.00' | 209.81' | 126.18' | 193.12' | N88°21'46"W | 80°08'26" |
| C4 | 100.00' | 82.79' | 43.93' | 80.44' | N24°34'30"W | 47°26'04" |
| C5 | 100.00' | 157.08' | 100.00' | 141.42' | N44°08'32"E | 90°00'00" |
| C6 | 100.00' | 157.08' | 100.00' | 141.42' | S45°51'28"E | 90°00'00" |
| C7 | 500.00' | 327.90' | 170.09' | 322.06' | S19°38'43"E | 37°34'30" |
| C8 | 50.00' | 45.19' | 24.27' | 43.67' | S64°19'33"E | 51°47'09" |
| C9 | 25.00' | 19.63' | 10.36' | 19.13' | S15°55'59"E | 45°00'00" |
| C10 | 25.00' | 19.63' | 10.36' | 19.13' | S29°04'01"W | 45°00'00" |
| C11 | 32.00' | 50.25' | 31.98' | 45.24' | N44°07'28"E | 89°57'53" |

1. THE UTILITIES SHOWN ON THESE PLANS AND ON THE TOPOGRAPHICAL SURVEY MAY NOT BE A COMPLETE REPRESENTATION OF THE EXISTING UTILITIES ON AND AROUND THE SITE. THE LOCATION AND SIZE OF THESE UTILITIES MAY BE APPROXIMATE. THE ENGINEER AND/OR SURVEYOR
SHALL NOT BE HELD LIABLE FOR ANY INACCURATE UTILITY INFORMATION INDICATED, IMPLIED, OR NOT SHOWN.

2. THE CONTRACTOR SHALL BE RESPONSIBLE FOR LOCATING AND MAINTAINING IN SERVICE ALL EXISTING UTILITIES ENCOUNTERED DURING CONSTRUCTION UNLESS OTHERWISE INDICATED IN THE DRAWINGS. ANY PIPING, WHICH CAN BE REMOVED DURING CONSTRUCTION WITHOUT UNDUE INTERRUPTION OF SERVICE MAY BE REMOVED AND REPLACED BY THE CONTRACTOR, AT HIS EXPENSE WITH THE PERMISSION OF THE OWNER.

3. BEFORE WORKING WITH OR AROUND EXISTING UTILITIES, THE APPLICABLE UTILITY COMPANY SHALL BE CONTACTED BY THE CONTRACTOR.

4. THE CONTRACTOR SHALL PRESERVE AND PROTECT PROPERTY MARKERS, SECTION CORNERS, SURVEY MARKS AND CITY BENCH MARKS, SUCH AS STONES, PIPES, OR OTHER MONUMENTS ENCOUNTERED. IF THE CONTRACTOR MUST RELOCATE THE PROPERTY MARKERS OR MONUMENTS THEIR LOCATION SHALL BE REFERENCED BY A REGISTERED LAND SURVEYOR AND THE OWNER NOTIFIED BEFORE MOVING. ALL PROPERTY MARKERS AND MONUMENTS RELOCATED DURING CONSTRUCTION SHALL BE RE-ESTABLISHED BY A REGISTERED LAND SURVEYOR AT THE CONTRACTOR'S EXPENSE.

5. IT IS THE RESPONSIBILITY OF THE CONTRACTOR TO INSPECT EACH DAY AND REMOVE ALL MUD, DIRT, GRAVEL AND LOOSE MATERIALS TRACKED, DUMPED, SPILLED OR WIND BLOWN FROM THE SITE ON TO OTHER SITES, RIGHT-OF-WAYS, PUBLIC OR PRIVATE STREETS, DRIVEWAYS, YARDS, OR SIDEWALKS. THE CONTRACTOR MUST CLEAN DAILY IF NECESSARY.

6. ROADWAY SURFACING AND BASE MATERIALS, OR ANY OTHER PROPERTY REMOVED OR DAMAGED, SHALL BE REPLACED OR REPAIRED AS PROVIDED FOR IN THE SPECIFICATIONS OR OTHER CONTRACT DOCUMENTS.

7. THE CONTRACTOR SHALL BE RESPONSIBLE TO PROVIDE AT HIS EXPENSE ALL AUTOMOBILE AND PEDESTRIAN TRAFFIC CONTROL DEVICES REQUIRED BY FEDERAL, STATE, COUNTY, CITY OR LOCAL AGENCIES. EVERY EFFORT SHALL BE MADE BY THE CONTRACTOR TO PROVIDE FOR ACCESS TO THE RESIDENCES ACROSS THE WORK AREA.

8. INFORMATION ON DETAIL DRAWINGS TAKES PRIORITY OVER ALL GENERAL DRAWINGS AND SCHEDULES. CONFLICTS SHALL BE RESOLVED ACCORDINGLY, PRIOR TO ANY CONSTRUCTION OR INSTALLATION. EXACT BUILDING DIMENSIONS SHALL BE VERIFIED WITH ARCHITECTURAL PLANS BY CONTRACTOR.

9. WHEN CONNECTIONS ARE TO BE MADE TO EXISTING PIPING AND STRUCTURES OR WHERE CONSTRUCTION IS IN THE VICINITY OF EXISTING PIPING
THE LOCATION AND ELEVATION OF THE EXISTING PIPING SHALL BE FIELD VERIFIED AND NOTIFICATION GIVEN TO THE OWNER IF THE EXISTING
PIPING IS FOUND TO BE DIFFERENT THAN THAT SHOWN ON THE DRAWINGS.

10. WHERE CONNECTIONS ARE MADE TO EXISTING MANHOLES OR BOX INLETS, THAT STRUCTURE SHALL BE REHABILITATED. THIS REHABILITATION SHALL INCLUDE THE INSTALLATION OF BENCH WALLS, AS WELL AS PRESCRIBED MEASURES TO ELIMINATE THE POTENTIAL FOR MIGRATION OF BACKFILL MATERIALS INTO THE STORMWATER SYSTEM.

11. FOR CLARITY OF THESE DRAWINGS, PIPES AND STRUCTURES MAY NOT BE DRAWN TO SCALE OR EXACTLY LOCATED.

12. THE CONTRACTOR SHALL VERIFY ALL DIMENSIONS AND ELEVATIONS IN THE FIELD PRIOR TO THE START OF CONSTRUCTION. THE CONTRACTOR SHALL BE RESPONSIBLE FOR ALL FIELD DIMENSIONS AND ELEVATIONS DURING THE ENTIRE CONSTRUCTION SCHEDULE. IF ANY DISCREPANCIES ARE FOUND IN THESE ENGINEERING PLANS FROM ACTUAL FIELD DIMENSIONS, THE CONTRACTOR SHALL CONTACT THE ENGINEER IMMEDIATELY.

13. ALL CONSTRUCTION METHODS AND MATERIALS MUST CONFORM TO CURRENT STANDARDS AND SPECIFICATIONS OF THE FEDERAL, STATE, COUNTY, CITY OR LOCAL REQUIREMENTS, WHICHEVER HAS JURISDICTION.

14. ALL PARKING STRIPES ARE TO BE 4" PAINTED WHITE. UNLESS OTHERWISE NOTED ON THE PLANS, DETAILS, OR SPECIFICATIONS.

15. ALL DIMENSIONS ARE TO EDGE OF PAVEMENT OR FACE OF CURB, UNLESS DIMENSIONS ARE AT THE PERIMETER TO SHOW SETBACKS, WHERE APPLICABLE.

16. ALL DIMENSIONS ARE TO OUTSIDE FACE OF BRICK OR FACING MATERIAL, WHERE APPLICABLE.

17. PROVIDE SMOOTH TRANSITION FROM NEWLY PAVED AREAS TO EXISTING AREAS AS NECESSARY. ALL AREAS WHERE PROPOSED PAVEMENT MEETS EXISTING PAVEMENT, THE EXISTING EDGE OF PAVEMENT SHALL BE FREE OF ALL LOOSE DEBRIS. THE EDGE OF EXISTING ASPHALT PAVEMENT SHALL BE PROPERLY SEALED WITH A TACK COAT MATERIAL IN ALL AREAS WHERE NEW ASPHALT PAVEMENT IS INDICATED TO JOIN EXISTING.

18. ALL EXCAVATED AREAS TO BE SEEDED AND/OR SODDED AFTER FINISH GRADING UNLESS OTHERWISE NOTED. ALL NEWLY SODDED/SEEDED AREAS SHALL HAVE A MINIMUM OF 4" OF TOPSOIL. CONTRACTOR TO SUPPLY STRAW MULCH WHERE GRASS SEED HAS BEEN PLANTED.

19. RESURFACE OR RECONSTRUCT AT LEAST TO ORIGINAL CONDITIONS ALL AREAS WHERE TRAFFIC BY CONTRACTOR, SUBCONTRACTORS OR SUPPLIERS HAVE DAMAGED EXISTING PAVEMENT, LAWNS OR OTHER IMPROVEMENTS DURING CONSTRUCTION, AFTER CONSTRUCTION WORK IS COMPLETE.

20. ALL UTILITY TRENCHES WITHIN 5 FEET OF PAVEMENT SHALL BE COMPLETELY BACK FILLED WITH GRANULAR BACK FILL.

21. ALL RADII INDICATED SHALL BE CONSTRUCTED AS CIRCULAR ARCS.

22. ALL ADA RAMPS AND SIGNAGE SHALL BE IN ACCORDANCE WITH FEDERAL, STATE, COUNTY OR LOCAL CODE WHICHEVER HAD JURISDICTION. CONTRACTOR SHALL CONFIRM ALL REQUIREMENTS PRIOR TO ANY INSTALLATION. SEE PLAN FOR LOCATIONS.

23. ALL DIMENSIONS ARE PARALLEL AND PERPENDICULAR TO BASE LINES, PROPERTY LINES OR BUILDING LINES UNLESS OTHERWISE NOTED.

24. EXPANSION JOINTS ARE TO BE PLACED AT ALL WALK INTERSECTIONS AND BETWEEN WALKS AND PLATFORMS. SIDEWALK SCORES ARE TO BE EQUALLY SPACED BETWEEN EXPANSION JOINTS. CONTRACTIOION JOINTS AND PERPENDICULAR SIDEWALKS AT 5' INTERVALS OR LESS WITH A CONTRACTION JOINT EVERY 20' OR LESS.

25. EXPANSION JOINTS ARE TO BE PLACED EVERY 20' ALONG CURBS.

26. THIS PROJECT SHALL MEET A.D.A. REQUIREMENT

811 Know what's below. Call before you dig.

IUPPS Dig | Safely.
Indiana Underground Plant Protection Service

| DATE | MARK | REVISIONS | BY |
|---|---|---|---|

DAVID J. STOEPPELWERTH
REGISTERED
No. 19358
STATE OF INDIANA
PROFESSIONAL ENGINEER

THIS DRAWING IS NOT INTENDED TO BE REPRESENTED AS A RETRACEMENT OR ORIGINAL BOUNDARY SURVEY, A ROUTE SURVEY OR A SURVEYOR LOCATION REPORT.
CERTIFIED: 2/1/12


STOEPPELWERTH & ASSOCIATES
ALWAYS ON
7965 East 106th Street, Fishers, IN 46038-5365
phone: 317.849.5935 fax: 317.849.5942


# SITE PLAN
# BRIDGEWATER APARTMENTS

HAMILTON COUNTY, INDIANA
WESTFIELD

DRAWN BY: KRG
CHECKED BY: BKR
SHEET NO. C204
S & A JOB NO. 56030JUSL1

S:\56030JUS-L1\DWG\C204-Site Plan.dwg, 1/30/2013 9:14:53 AM, KGilson, 1:1

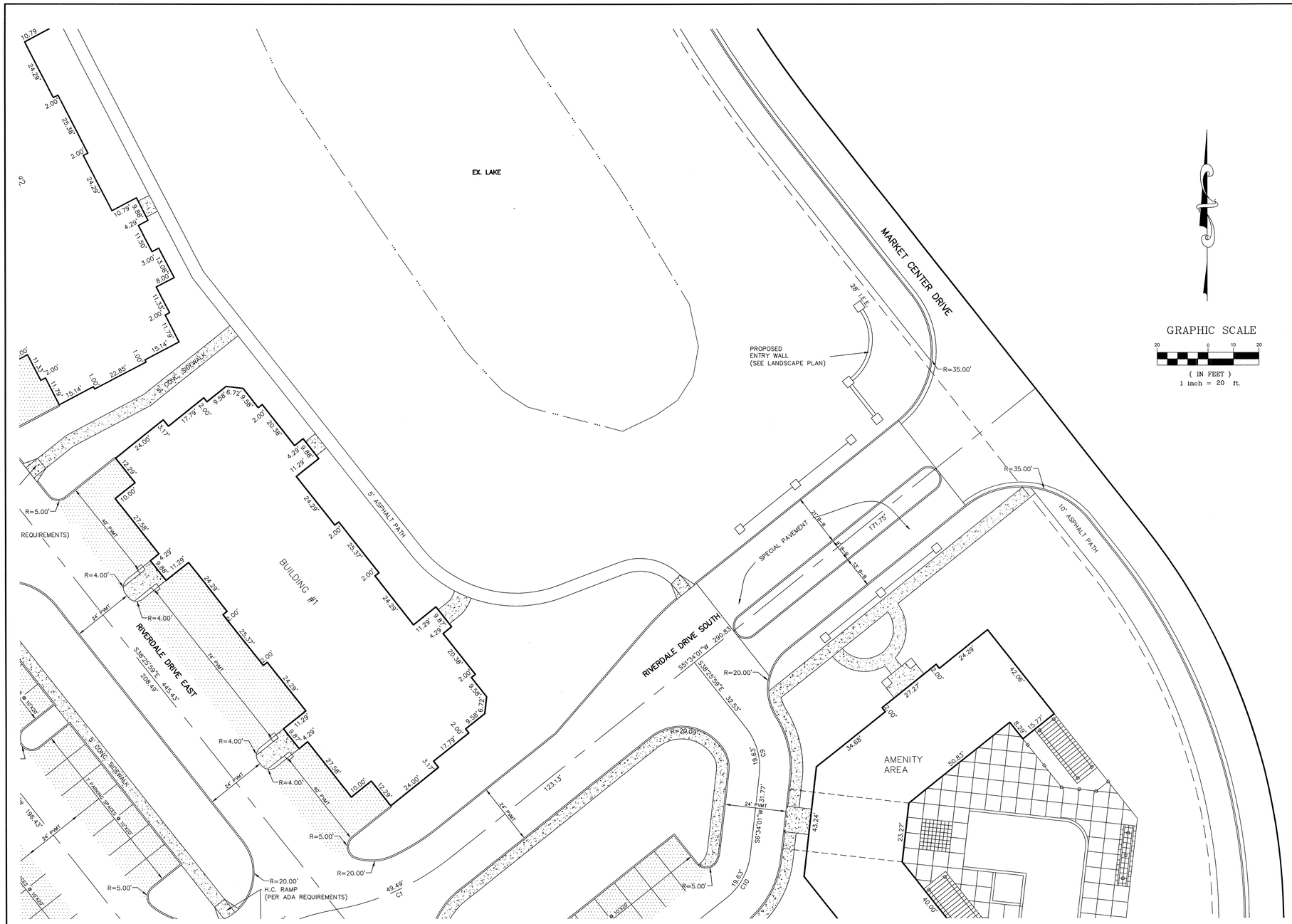





## LEGEND

| | |
|---|---|
| B.L. | BUILDING LINE |
| D.U.&S.E. | DRAINAGE UTILITY & STORM EASEMENT |
| D.E. | DRAINAGE EASEMENT |
| U.E. | UTILITY EASEMENT |
| L.M.A.E. | LANDSCAPE MAINTENANCE ACCESS EASEMENT |
| R= | RADIUS |
| H.C. | HANDICAP |
| CONC. | CONCRETE |
| | PROPOSED CONCRETE |
| | LIGHT DUTY ASPHALT DRIVE AREA (SEE DETAIL C802) |
| | HEAVY DUTY ASPHALT DRIVE AREA (SEE DETAIL C802) |

262 PARKING SPACES
120 CAR GARAGE UNITS
6 H.C. SPACES
1 VAN ACCESSIBLE SPACE
509 SPACES TOTAL

REQUIRED PARKING SPACES = 480

240 UNITS TOTAL

CENTERLINE CURVE DATA

| CURVE | RADIUS | LENGTH | TANGENT | CHORD | CHORD BEARING | DELTA |
|---|---|---|---|---|---|---|
| C1 | 100.00' | 49.49' | 25.26' | 48.99' | S65°44'45"W | 28°21'27" |
| C2 | 100.00' | 49.49' | 25.26' | 48.99' | S65°44'45"W | 28°21'27" |
| C3 | 150.00' | 209.81' | 126.18' | 193.12' | N88°21'46"W | 80°08'26" |
| C4 | 100.00' | 82.79' | 43.93' | 80.44' | N24°34'30"W | 47°26'04" |
| C5 | 100.00' | 157.08' | 100.00' | 141.42' | N44°08'32"E | 90°00'00" |
| C6 | 100.00' | 157.08' | 100.00' | 141.42' | S45°51'28"E | 90°00'00" |
| C7 | 500.00' | 327.90' | 170.09' | 322.06' | S19°38'43"E | 37°34'30" |
| C8 | 50.00' | 45.19' | 24.27' | 43.67' | S64°19'33"E | 51°47'09" |
| C9 | 25.00' | 19.63' | 10.36' | 19.13' | S15°55'59"E | 45°00'00" |
| C10 | 25.00' | 19.63' | 10.36' | 19.13' | S29°04'01"W | 45°00'00" |
| C11 | 32.00' | 50.25' | 31.98' | 45.24' | N44°07'28"E | 89°57'53" |

1. THE UTILITIES SHOWN ON THESE PLANS AND ON THE TOPOGRAPHICAL SURVEY MAY NOT BE A COMPLETE REPRESENTATION OF THE EXISTING UTILITIES ON AND AROUND THE SITE. THE LOCATION AND SIZE OF THESE UTILITIES MAY BE APPROXIMATE. THE ENGINEER AND/OR SURVEYOR
SHALL NOT BE HELD LIABLE FOR ANY INACCURATE UTILITY INFORMATION INDICATED, IMPLIED, OR NOT SHOWN.

2. THE CONTRACTOR SHALL BE RESPONSIBLE FOR LOCATING AND MAINTAINING IN SERVICE ALL EXISTING UTILITIES ENCOUNTERED DURING CONSTRUCTION UNLESS OTHERWISE INDICATED IN THE DRAWINGS. ANY PIPING, WHICH CAN BE REMOVED DURING CONSTRUCTION WITHOUT UNDUE INTERRUPTION OF SERVICE MAY BE REMOVED AND REPLACED BY THE CONTRACTOR, AT HIS EXPENSE WITH THE PERMISSION OF THE OWNER.

3. BEFORE WORKING WITH OR AROUND EXISTING UTILITIES, THE APPLICABLE UTILITY COMPANY SHALL BE CONTACTED BY THE CONTRACTOR.

4. THE CONTRACTOR SHALL PRESERVE AND PROTECT PROPERTY MARKERS, SECTION CORNERS, SURVEY MARKS AND CITY BENCH MARKS, SUCH AS STONES, PIPES, OR OTHER MONUMENTS ENCOUNTERED. IF THE CONTRACTOR MUST RELOCATE THE PROPERTY MARKERS OR MONUMENTS THEIR LOCATION SHALL BE REFERENCED BY A REGISTERED LAND SURVEYOR AND THE OWNER NOTIFIED BEFORE MOVING. ALL PROPERTY MARKERS AND MONUMENTS RELOCATED DURING CONSTRUCTION SHALL BE RE-ESTABLISHED BY A REGISTERED LAND SURVEYOR AT THE CONTRACTOR'S EXPENSE.

5. IT IS THE RESPONSIBILITY OF THE CONTRACTOR TO INSPECT EACH DAY AND REMOVE ALL MUD, DIRT, GRAVEL AND LOOSE MATERIALS TRACKED, DUMPED, SPILLED OR WIND BLOWN FROM THE SITE ON TO OTHER SITES, RIGHT-OF-WAYS, PUBLIC OR PRIVATE STREETS, DRIVEWAYS, YARDS, OR SIDEWALKS. THE CONTRACTOR MUST CLEAN DAILY IF NECESSARY.

6. ROADWAY SURFACING AND BASE MATERIALS, OR ANY OTHER PROPERTY REMOVED OR DAMAGED, SHALL BE REPLACED OR REPAIRED AS PROVIDED FOR IN THE SPECIFICATIONS OR OTHER CONTRACT DOCUMENTS.

7. THE CONTRACTOR SHALL BE RESPONSIBLE TO PROVIDE AT HIS EXPENSE ALL AUTOMOBILE AND PEDESTRIAN TRAFFIC CONTROL DEVICES REQUIRED BY FEDERAL, STATE, COUNTY, CITY OR LOCAL AGENCIES. EVERY EFFORT SHALL BE MADE BY THE CONTRACTOR TO PROVIDE FOR ACCESS TO THE RESIDENCES ACROSS THE WORK AREA.

8. INFORMATION ON DETAIL DRAWINGS TAKES PRIORITY OVER ALL GENERAL DRAWINGS AND SCHEDULES. CONFLICTS SHALL BE RESOLVED ACCORDINGLY, PRIOR TO ANY CONSTRUCTION OR INSTALLATION. EXACT BUILDING DIMENSIONS SHALL BE VERIFIED WITH ARCHITECTURAL PLANS BY CONTRACTOR.

9. WHEN CONNECTIONS ARE TO BE MADE TO EXISTING PIPING AND STRUCTURES OR WHERE CONSTRUCTION IS IN THE VICINITY OF EXISTING PIPING
THE LOCATION AND ELEVATION OF THE EXISTING PIPING SHALL BE FIELD VERIFIED AND NOTIFICATION GIVEN TO THE OWNER IF THE EXISTING
PIPING IS FOUND TO BE DIFFERENT THAN THAT SHOWN ON THE DRAWINGS.

10. WHERE CONNECTIONS ARE MADE TO EXISTING MANHOLES OR BOX INLETS, THAT STRUCTURE SHALL BE REHABILITATED. THIS REHABILITATION SHALL INCLUDE THE INSTALLATION OF BENCH WALLS, AS WELL AS PRESCRIBED MEASURES TO ELIMINATE THE POTENTIAL FOR MIGRATION OF BACKFILL MATERIALS INTO THE STORMWATER SYSTEM.

11. FOR CLARITY OF THESE DRAWINGS, PIPES AND STRUCTURES MAY NOT BE DRAWN TO SCALE OR EXACTLY LOCATED.

12. THE CONTRACTOR SHALL VERIFY ALL DIMENSIONS AND ELEVATIONS IN THE FIELD PRIOR TO THE START OF CONSTRUCTION. THE CONTRACTOR SHALL BE RESPONSIBLE FOR ALL FIELD DIMENSIONS AND ELEVATIONS DURING THE ENTIRE CONSTRUCTION SCHEDULE. IF ANY DISCREPANCIES ARE FOUND IN THESE ENGINEERING PLANS FROM ACTUAL FIELD DIMENSIONS, THE CONTRACTOR SHALL CONTACT THE ENGINEER IMMEDIATELY.

13. ALL CONSTRUCTION METHODS AND MATERIALS MUST CONFORM TO CURRENT STANDARDS AND SPECIFICATIONS OF THE FEDERAL, STATE, COUNTY, CITY OR LOCAL REQUIREMENTS, WHICHEVER HAS JURISDICTION.

14. ALL PARKING STRIPES ARE TO BE 4" PAINTED WHITE. UNLESS OTHERWISE NOTED ON THE PLANS, DETAILS, OR SPECIFICATIONS.

15. ALL DIMENSIONS ARE TO EDGE OF PAVEMENT OR FACE OF CURB, UNLESS DIMENSIONS ARE AT THE PERIMETER TO SHOW SETBACKS, WHERE APPLICABLE.

16. ALL DIMENSIONS ARE TO OUTSIDE FACE OF BRICK OR FACING MATERIAL, WHERE APPLICABLE.

17. PROVIDE SMOOTH TRANSITION FROM NEWLY PAVED AREAS TO EXISTING AREAS AS NECESSARY. ALL AREAS WHERE PROPOSED PAVEMENT MEETS EXISTING PAVEMENT, THE EXISTING EDGE OF PAVEMENT SHALL BE FREE OF ALL LOOSE DEBRIS. THE EDGE OF EXISTING ASPHALT PAVEMENT SHALL BE PROPERLY SEALED WITH A TACK COAT MATERIAL IN ALL AREAS WHERE NEW ASPHALT PAVEMENT IS INDICATED TO JOIN EXISTING.

18. ALL EXCAVATED AREAS TO BE SEEDED AND/OR SODDED AFTER FINISH GRADING UNLESS OTHERWISE NOTED. ALL NEWLY SODDED/SEEDED AREAS SHALL HAVE A MINIMUM OF 4" OF TOPSOIL. CONTRACTOR TO SUPPLY STRAW MULCH WHERE GRASS SEED HAS BEEN PLANTED.

19. RESURFACE OR RECONSTRUCT AT LEAST TO ORIGINAL CONDITIONS ALL AREAS WHERE TRAFFIC BY CONTRACTOR, SUBCONTRACTORS OR SUPPLIERS HAVE DAMAGED EXISTING PAVEMENT, LAWNS OR OTHER IMPROVEMENTS DURING CONSTRUCTION, AFTER CONSTRUCTION WORK IS COMPLETE.

20. ALL UTILITY TRENCHES WITHIN 5 FEET OF PAVEMENT SHALL BE COMPLETELY BACK FILLED WITH GRANULAR BACK FILL.

21. ALL RADII INDICATED SHALL BE CONSTRUCTED AS CIRCULAR ARCS.

22. ALL ADA RAMPS AND SIGNAGE SHALL BE IN ACCORDANCE WITH FEDERAL, STATE, COUNTY OR LOCAL CODE WHICHEVER HAD JURISDICTION. CONTRACTOR SHALL CONFIRM ALL REQUIREMENTS PRIOR TO ANY INSTALLATION. SEE PLAN FOR LOCATIONS.

23. ALL DIMENSIONS ARE PARALLEL AND PERPENDICULAR TO BASE LINES, PROPERTY LINES OR BUILDING LINES UNLESS OTHERWISE NOTED.

24. EXPANSION JOINTS ARE TO BE PLACED AT ALL WALK INTERSECTIONS AND BETWEEN WALKS AND PLATFORMS. SIDEWALK SCORES ARE TO BE EQUALLY SPACED BETWEEN EXPANSION JOINTS. CONTRACTIOION JOINTS AND PERPENDICULAR SIDEWALKS AT 5' INTERVALS OR LESS WITH A CONTRACTION JOINT EVERY 20' OR LESS.

25. EXPANSION JOINTS ARE TO BE PLACED EVERY 20' ALONG CURBS.

26. THIS PROJECT SHALL MEET A.D.A. REQUIREMENT

811 Know what's below. Call before you dig.

IUPPS Dig Safely.
Indiana Underground Plant Protection Service

| DATE | MARK | REVISIONS | BY |
|---|---|---|---|

DAVID J. STOEPPELWERTH REGISTERED No. 19358 STATE OF INDIANA PROFESSIONAL ENGINEER

THIS DRAWING IS NOT INTENDED TO BE REPRESENTED AS A RETRACEMENT OR ORIGINAL "BOUNDARY SURVEY", A ROUTE SURVEY OR A SURVEYOR LOCATION REPORT.

CERTIFIED: 2/1/12

STOEPPELWERTH & ASSOCIATES
ALWAYS ON
7965 East 106th Street, Fishers, IN 46038-2505
phone: 317.849.5935 Fax: 317.849.5942

# SITE PLAN
# BRIDGEWATER APARTMENTS

HAMILTON COUNTY, INDIANA
WESTFIELD

DRAWN BY: KRG
CHECKED BY: BKR
SHEET NO. C205
S & A JOB NO. 56030JUSL1

S:\56030JUS-L1\DWG\C205-Site Plan.dwg, 1/29/2013 1:11:37 PM, KGilson, 1:1

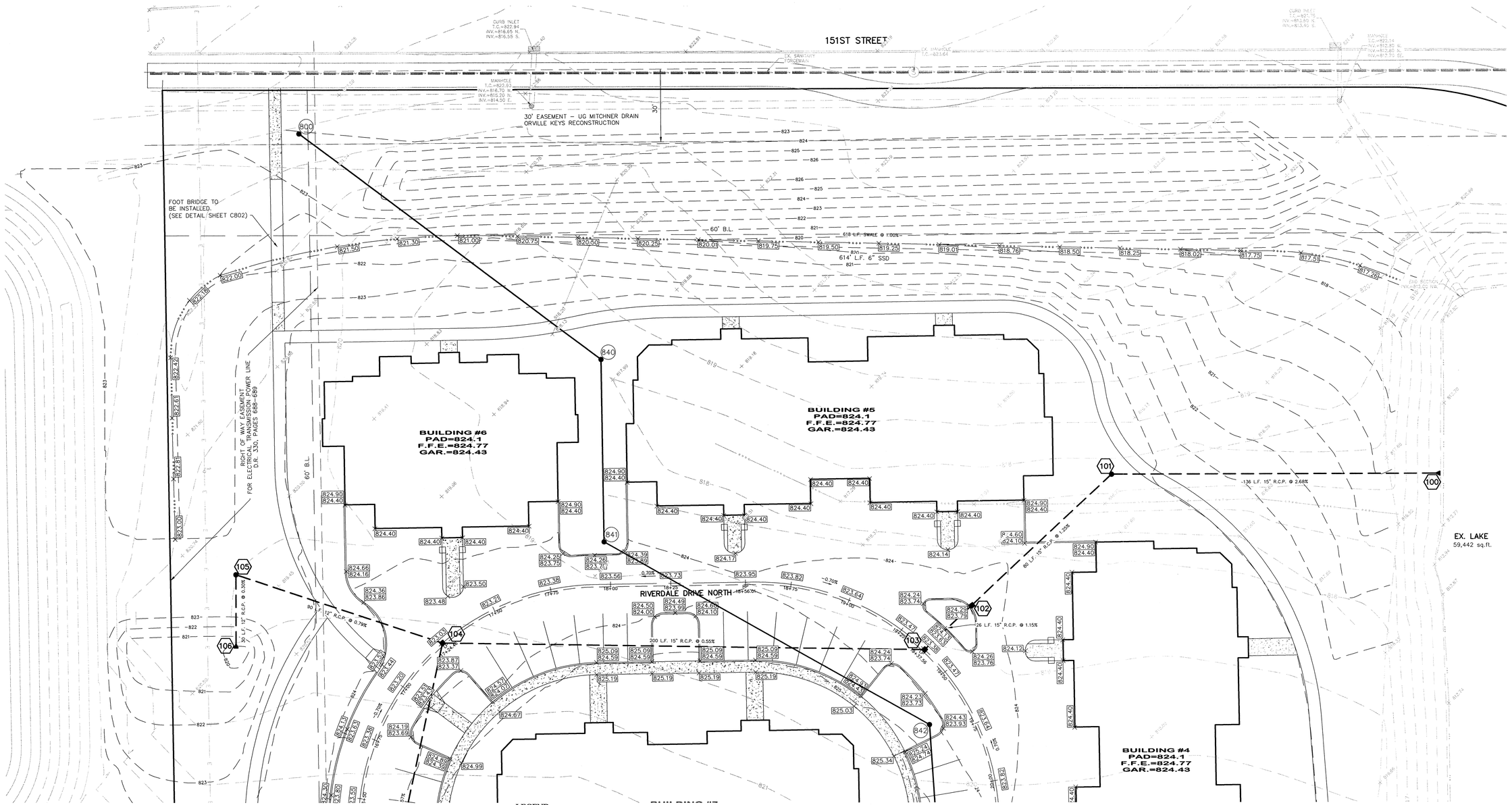


LEGEND

| | |
|---|---|
| B.L. | Building Line |
| H.P. | High Point |
| L.P. | Low Point |
| GRD.CHG | Grade Change |
| M.E. | Match Existing |
| 870 | EXISTING CONTOUR |
| | EXISTING SANITARY SEWER |
| | EXISTING STORM SEWER |
| 848.0 | PROPOSED GRADE |
| 870 | PROPOSED CONTOUR |
| | PROPOSED SANITARY SEWER |
| | PROPOSED STORM SEWER |
| W | PROPOSED WATER LINE |
| | PROPOSED SWALE |
| | PROPOSED 5' SIDEWALK (BY HOME BUILDER) (DEVELOPER SHALL INSTALL SIDEWALKS ALONG ALL COMMON AREA |
| | PROPOSED 6" UNDERDRAINS |
| 6" SSD | RISER TC |

GRAPHIC SCALE

20 0 10 20

( IN FEET )
1 inch = 20 ft.

GENERAL NOTES:

1.) BLUE REFLECTORS SHALL BE INSTALLED IN THE CENTER LINE OF THE PAVEMENT TO MARK FIRE HYDRANTS PER THE TOWN OF WESTFIELD'S UTILITY AND INFRASTRUCTURE CONSTRUCTION STANDARDS.

2.) ALL SSD'S (SUBSURFACE DRAINS) WILL NEED TO BE DOUBLE WALL SMOOTH BORE PERFORATED (HDPE) PIPE.

3.) ALL EXISTING OFF-SITE DRAIN TILES THAT ARE ENCOUNTERED SHALL BE TIED INTO THE PROPOSED STORM SEWER SYSTEM WITH A POSITIVE OUTFLOW. ANY TILE THAT IS ENCOUNTERED THAT IS COMPLETELY ON-SITE MUST BE CRUSHED AND ABANDONED.

4.)ALL PADS SHALL BE TESTED TO ASSURE A COMPACTION OF AT LEAST 95 PERCENT OF THE MAXIMUM DRY DENSITY USING THE STANDARD PROCTOR TEST METHOD.

5.)CONTRACTOR SHALL VERIFY LOCATION AND DEPTH OF ALL EXISTING UTILITIES PRIOR TO CONSTRUCTION TO CONFIRM THERE ARE NO CROSSING CONFLICTS. CONFLICTS THAT ARE DISCOVERED AFTER CONSTRUCTION BEGINS ARE SOLELY THE CONTRACTOR'S RESPONSIBILITY.

6.)CONTRACTOR TO PRESERVE EXISTING TREES AS MUCH AS POSSIBLE ESPECIALLY ALONG THE BOUNDARIES OF THIS PROJECT.

STRUCTURE TABLE

| STR.# | TYPE | T.C. | CASTING TYPE | DIAMETER IN | DIRECTION IN | INV._IN | DIAMETER OUT | DIRECTION OUT | INV._OUT | SLOPE |
|---|---|---|---|---|---|---|---|---|---|---|
| 100 | END SECTION | | | 15 | W | 812.65 | | | | |
| 101 | MANHOLE | 824.32 | R-1642 | 15 | SW | 816.40 | 15 | E | 816.30 | 2.68% |
| 102 | CURB INLET | 823.80 | R-3287-10V | 15 | SW | 817.50 | 15 | NE | 817.40 | 1.25% |
| 103 | CURB INLET | 823.38 | R-3405 | 15 | W | 817.90 | 15 | NE | 817.80 | 1.15% |
| 104 | CURB INLET | 823.03 | R-3405 | 12<br>12 | W<br>S | 819.10<br>819.10 | 15 | E | 819.00 | 0.55% |
| 105 | BEEHIVE INLET | 823.00 | R-4342 | 12 | S | 819.91 | 12 | E | 819.81 | 0.79% |
| 106 | END SECTION | | | | | | 12 | N | 820.00 | 0.30% |

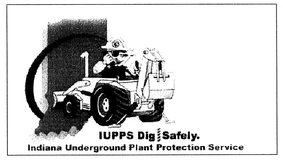


811 Know what's below. Call before you dig.

| DATE | MARK | REVISIONS | BY |
|---|---|---|---|

DAVID J. STOEPPELWERTH REGISTERED No. 19358 STATE OF INDIANA PROFESSIONAL ENGINEER

THIS DRAWING IS NOT INTENDED TO BE REPRESENTED AS A REPLACEMENT OR ORIGINAL BOUNDARY SURVEY, A ROUTE SURVEY OR A SURVEYOR LOCATION REPORT.

CERTIFIED: 2/1/12


STOEPPELWERTH & ASSOCIATES
ALWAYS ON
7965 East 106th Street, Fishers, IN 46038-9365
phone: 317.849.5935 fax: 317.849.5942


# SITE DEVELOPMENT PLAN
# BRIDGEWATER APARTMENTS

HAMILTON COUNTY, INDIANA

WESTFIELD

DRAWN BY: KRG
CHECKED BY: BKR
SHEET NO. C206
S & A JOB NO. 56030JUSL1

S:\56030JUS-L1\DWG\C206-Site Development Plan.dwg, 1/29/2013 1:13:16 PM, KGilson, 1:1

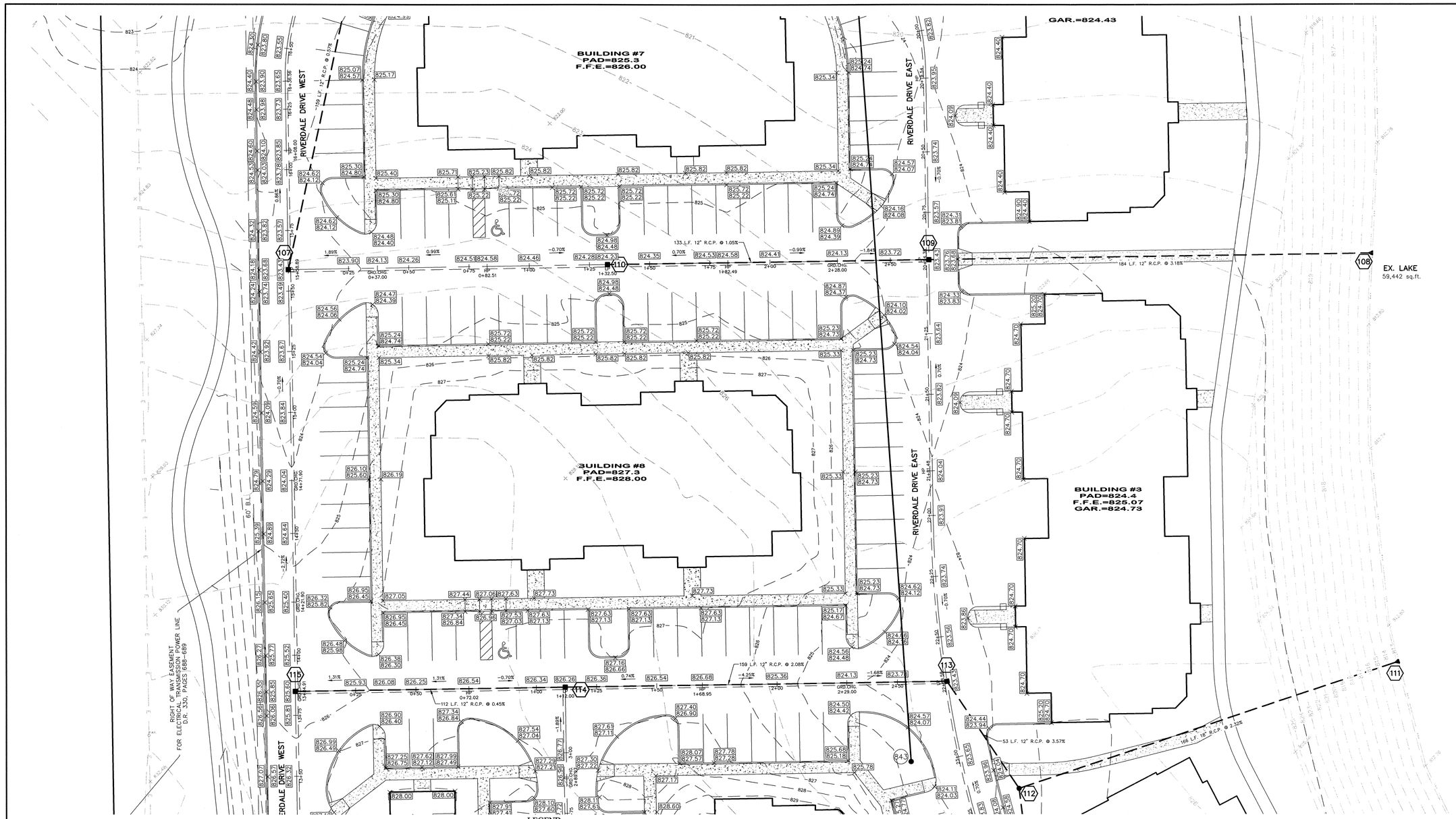


## LEGEND

| | |
|---|---|
| B.L. | Building Line |
| H.P. | High Point |
| L.P. | Low Point |
| GRD.CHG | Grade Change |
| M.E. | Match Existing |

- EXISTING CONTOUR
- EXISTING SANITARY SEWER
- EXISTING STORM SEWER
- PROPOSED GRADE
- PROPOSED CONTOUR
- PROPOSED SANITARY SEWER
- PROPOSED STORM SEWER
- PROPOSED WATER LINE
- PROPOSED SWALE
- PROPOSED 5' SIDEWALK (BY HOME BUILDER) (DEVELOPER SHALL INSTALL SIDEWALKS ALONG ALL COMMON AREA
- PROPOSED 6" UNDERDRAINS
- 6" SSD
- RISER TC

GENERAL NOTES:

1.) BLUE REFLECTORS SHALL BE INSTALLED IN THE CENTER LINE OF THE PAVEMENT TO MARK FIRE HYDRANTS PER THE TOWN OF WESTFIELD'S UTILITY AND INFRASTRUCTURE CONSTRUCTION STANDARDS.

2.) ALL SSD'S (SUBSURFACE DRAINS) WILL NEED TO BE DOUBLE WALL SMOOTH BORE PERFORATED (HDPE) PIPE.

3.) ALL EXISTING OFF-SITE DRAIN TILES THAT ARE ENCOUNTERED SHALL BE TIED INTO THE PROPOSED STORM SEWER SYSTEM WITH A POSITIVE OUTFLOW. ANY TILE THAT IS ENCOUNTERED THAT IS COMPLETELY ON-SITE MUST BE CRUSHED AND ABANDONED.

4.)ALL PADS SHALL BE TESTED TO ASSURE A COMPACTION OF AT LEAST 95 PERCENT OF THE MAXIMUM DRY DENSITY USING THE STANDARD PROCTOR TEST METHOD.

5.)CONTRACTOR SHALL VERIFY LOCATION AND DEPTH OF ALL EXISTING UTILITIES PRIOR TO CONSTRUCTION TO CONFIRM THERE ARE NO CROSSING CONFLICTS. CONFLICTS THAT ARE DISCOVERED AFTER CONSTRUCTION BEGINS ARE SOLELY THE CONTRACTOR'S RESPONSIBILITY.

6.)CONTRACTOR TO PRESERVE EXISTING TREES AS MUCH AS POSSIBLE ESPECIALLY ALONG THE BOUNDARIES OF THIS PROJECT.

GRAPHIC SCALE

20 0 10 20

( IN FEET )
1 inch = 20 ft.

STRUCTURE TABLE

| STR.# | TYPE | T.C. | CASTING TYPE | DIAMETER IN | DIRECTION IN | INV._IN | DIAMETER OUT | DIRECTION OUT | INV._OUT | SLOPE |
|---|---|---|---|---|---|---|---|---|---|---|
| 107 | CURB INLET | 823.43 | R-3405 | | | | 12 | N | 820.00 | 0.57% |
| 108 | END SECTION | | | 12 | W | 812.65 | | | | |
| 109 | CURB INLET | 823.43 | R-3405 | 12 | W | 818.60 | 12 | E | 818.50 | 3.18% |
| 110 | CURB INLET | 824.23 | R-3405 | | | | 12 | E | 820.00 | 1.05% |
| 111 | END SECTION | | | 18 | W | 812.65 | | | | |
| 112 | BEEHIVE INLET | 824.74 | R-1642 | 12<br>12 | S<br>NW | 816.60<br>816.60 | 18 | E | 816.50 | 2.32% |
| 113 | CURB INLET | 823.43 | R-3405 | 12 | W | 818.60 | 12 | SE | 818.50 | 3.57% |
| 114 | CURB INLET | 826.26 | R-3405 | 12 | W | 822.00 | 12 | E | 821.90 | 2.08% |
| 115 | CURB INLET | 825.60 | R-3405 | | | | 12 | E | 822.50 | 0.57% |

IUPPS Dig Safely.
Indiana Underground Plant Protection Service

811
Know what's below.
Call before you dig.

| DATE | MARK | REVISIONS | BY |
|---|---|---|---|

THIS DRAWING IS NOT INTENDED TO BE REPRESENTED AS A RETRACEMENT OR ORIGINAL BOUNDARY SURVEY, A ROUTE SURVEY OR A SURVEYOR LOCATION REPORT.

CERTIFIED: 2/1/12

DAVID J. STOEPPELWERTH
REGISTERED
No. 19358
STATE OF INDIANA
PROFESSIONAL ENGINEER


STOEPPELWERTH
& ASSOCIATES
ALWAYS ON
7965 East 106th Street, Fishers, IN 46038-2505
phone: 317.849.5935 fax: 317.849.5942


# SITE DEVELOPMENT PLAN
# BRIDGEWATER APARTMENTS

HAMILTON COUNTY, INDIANA

WESTFIELD

DRAWN BY: KRG
CHECKED BY: BKR
SHEET NO. C207
S & A JOB NO. 56030JUSL1

S:\56030JUSL1\DWG\C207-Site Development Plan.dwg, 1/29/2013 1:14:56 PM, KGilison, 1:1

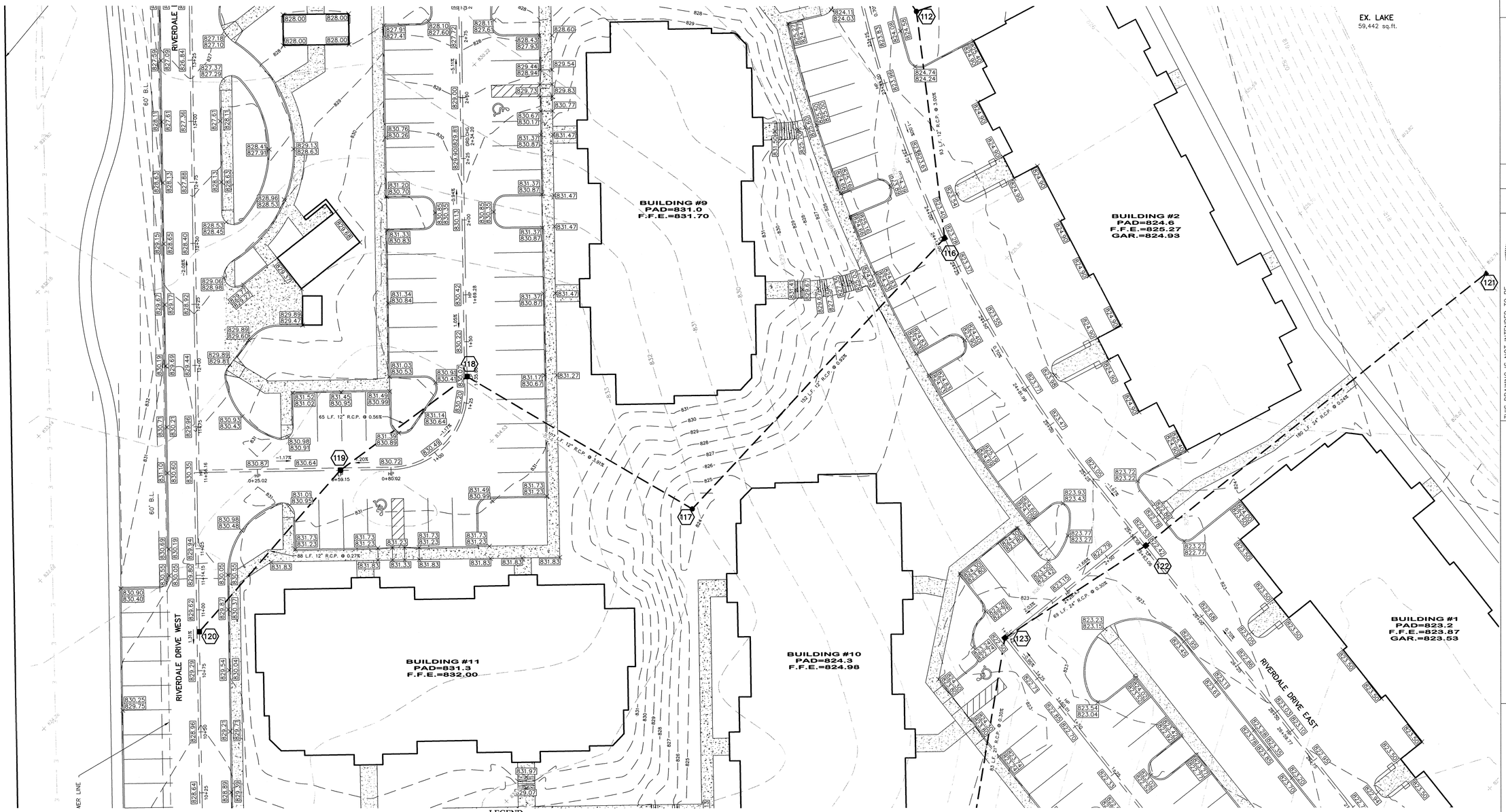


## LEGEND

| | |
|---|---|
| B.L. | Building Line |
| H.P. | High Point |
| L.P. | Low Point |
| GRD.CHG | Grade Change |
| M.E. | Match Existing |

- EXISTING CONTOUR
- EXISTING SANITARY SEWER
- EXISTING STORM SEWER
- PROPOSED GRADE
- PROPOSED CONTOUR
- PROPOSED SANITARY SEWER
- PROPOSED STORM SEWER
- PROPOSED WATER LINE
- PROPOSED SWALE
- PROPOSED 5' SIDEWALK (BY HOME BUILDER) (DEVELOPER SHALL INSTALL SIDEWALKS ALONG ALL COMMON AREA
- PROPOSED 6" UNDERDRAINS
- 6" SSD
- RISER TC

GENERAL NOTES:

1.) BLUE REFLECTORS SHALL BE INSTALLED IN THE CENTER LINE OF THE PAVEMENT TO MARK FIRE HYDRANTS PER THE TOWN OF WESTFIELD'S UTILITY AND INFRASTRUCTURE CONSTRUCTION STANDARDS.

2.) ALL SSD'S (SUBSURFACE DRAINS) WILL NEED TO BE DOUBLE WALL SMOOTH BORE PERFORATED (HDPE) PIPE.

3.) ALL EXISTING OFF-SITE DRAIN TILES THAT ARE ENCOUNTERED SHALL BE TIED INTO THE PROPOSED STORM SEWER SYSTEM WITH A POSITIVE OUTFLOW. ANY TILE THAT IS ENCOUNTERED THAT IS COMPLETELY ON-SITE MUST BE CRUSHED AND ABANDONED.

4.)ALL PADS SHALL BE TESTED TO ASSURE A COMPACTION OF AT LEAST 95 PERCENT OF THE MAXIMUM DRY DENSITY USING THE STANDARD PROCTOR TEST METHOD.

5.)CONTRACTOR SHALL VERIFY LOCATION AND DEPTH OF ALL EXISTING UTILITIES PRIOR TO CONSTRUCTION TO CONFIRM THERE ARE NO CROSSING CONFLICTS. CONFLICTS THAT ARE DISCOVERED AFTER CONSTRUCTION BEGINS ARE SOLELY THE CONTRACTOR'S RESPONSIBILITY.

6.)CONTRACTOR TO PRESERVE EXISTING TREES AS MUCH AS POSSIBLE ESPECIALLY ALONG THE BOUNDARIES OF THIS PROJECT.

GRAPHIC SCALE

20 0 10 20

( IN FEET )
1 inch = 20 ft.

STRUCTURE TABLE

| STR.# | TYPE | T.C. | CASTING TYPE | DIAMETER IN | DIRECTION IN | INV._IN | DIAMETER OUT | DIRECTION OUT | INV._OUT | SLOPE |
|---|---|---|---|---|---|---|---|---|---|---|
| 112 | BEEHIVE INLET | 824.74 | R-1642 | 12<br>12 | S<br>NW | 816.60<br>816.60 | 18 | E | 816.50 | 2.32% |
| 116 | CURB INLET | 823.28 | R-3405 | 12 | SW | 819.50 | 12 | N | 819.40 | 3.00% |
| 117 | BEEHIVE INLET | 824.00 | R-4342 | 12 | NW | 821.00 | 12 | NE | 820.90 | 0.92% |
| 118 | CURB INLET | 830.07 | R-3405 | 12 | SW | 825.30 | 12 | SE | 825.20 | 3.91% |
| 119 | CURB INLET | 830.47 | R-3405 | 12 | SW | 825.76 | 12 | NE | 825.66 | 0.56% |
| 120 | CURB INLET | 829.50 | R-3405 | | | | 12 | NE | 826.00 | 0.27% |
| 121 | END SECTION | | | 24 | SW | 812.65 | | | | |
| 122 | CURB INLET | 822.42 | R-3405 | 24 | SW | 813.18 | 24 | NE | 813.08 | 0.24% |
| 123 | CURB INLET | 822.56 | R-3405 | 21 | S | 813.49 | 24 | NE | 813.39 | 0.30% |

IUPPS Dig Safely.
Indiana Underground Plant Protection Service

811
Know what's below.
Call before you dig.

| DATE | MARK | REVISIONS | BY |
|---|---|---|---|

DAVID J. STOEPPELWERTH
REGISTERED
No. 19358
STATE OF INDIANA
PROFESSIONAL ENGINEER

THIS DRAWING IS NOT INTENDED TO BE REPRESENTED AS A RETRACEMENT OR ORIGINAL BOUNDARY SURVEY, A ROUTE SURVEY OR A SURVEYOR LOCATION REPORT.

CERTIFIED: 2/1/12

David J. Stoeppelwerth

STOEPPELWERTH
& ASSOCIATES, INC.
ALWAYS ON
7965 East 106th Street, Fishers, IN 46038-2505
phone: 317.849.5935 fax: 317.849.5942

# SITE DEVELOPMENT PLAN
# BRIDGEWATER APARTMENTS

HAMILTON COUNTY, INDIANA
WESTFIELD

DRAWN BY: KRG
CHECKED BY: BKR
SHEET NO. C208
S & A JOB NO. 56030JUSL1

S:\56030JUS-L1\DWG\C208-Site Development Plan.dwg, 1/29/2013 1:16:47 PM, KGilson, 1:1

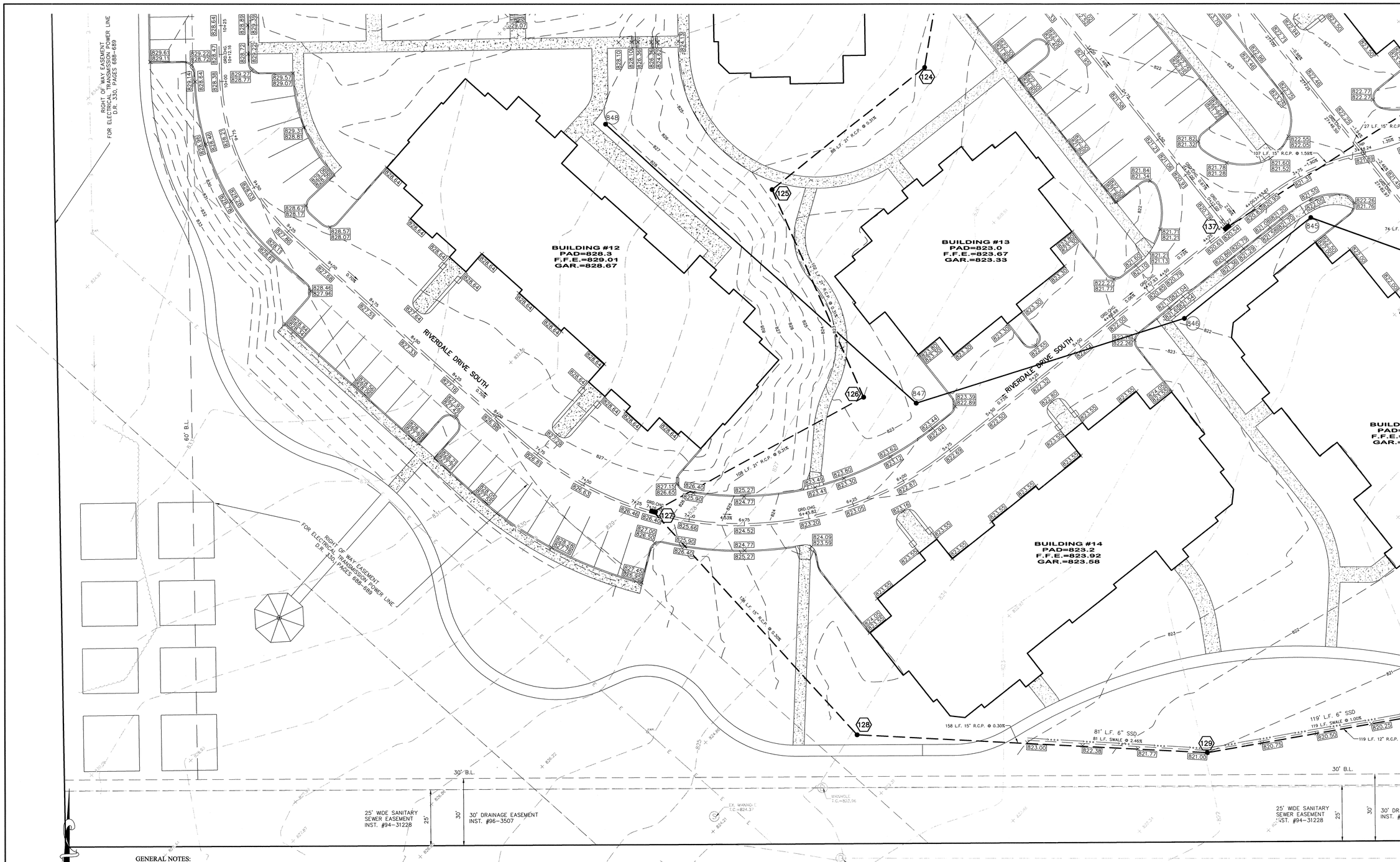


GENERAL NOTES:

1.) BLUE REFLECTORS SHALL BE INSTALLED IN THE CENTER LINE OF THE PAVEMENT TO MARK FIRE HYDRANTS PER THE TOWN OF WESTFIELD'S UTILITY AND INFRASTRUCTURE CONSTRUCTION STANDARDS.

2.) ALL SSD'S (SUBSURFACE DRAINS) WILL NEED TO BE DOUBLE WALL SMOOTH BORE PERFORATED (HDPE) PIPE.

3.) ALL EXISTING OFF-SITE DRAIN TILES THAT ARE ENCOUNTERED SHALL BE TIED INTO THE PROPOSED STORM SEWER SYSTEM WITH A POSITIVE OUTFLOW. ANY TILE THAT IS ENCOUNTERED THAT IS COMPLETELY ON-SITE MUST BE CRUSHED AND ABANDONED.

4.)ALL PADS SHALL BE TESTED TO ASSURE A COMPACTION OF AT LEAST 95 PERCENT OF THE MAXIMUM DRY DENSITY USING THE STANDARD PROCTOR TEST METHOD.

5.)CONTRACTOR SHALL VERIFY LOCATION AND DEPTH OF ALL EXISTING UTILITIES PRIOR TO CONSTRUCTION TO CONFIRM THERE ARE NO CROSSING CONFLICTS. CONFLICTS THAT ARE DISCOVERED AFTER CONSTRUCTION BEGINS ARE SOLELY THE CONTRACTOR'S RESPONSIBILITY.

6.)CONTRACTOR TO PRESERVE EXISTING TREES AS MUCH AS POSSIBLE ESPECIALLY ALONG THE BOUNDARIES OF THIS PROJECT.

GRAPHIC SCALE

20 0 10 20

( IN FEET )
1 inch = 20 ft.

LEGEND

| | |
|---|---|
| B.L. | Building Line |
| H.P. | High Point |
| L.P. | Low Point |
| GRD.CHG | Grade Change |
| M.E. | Match Existing |

870 EXISTING CONTOUR
EXISTING SANITARY SEWER
EXISTING STORM SEWER
848.0 PROPOSED GRADE
870 PROPOSED CONTOUR
PROPOSED SANITARY SEWER
PROPOSED STORM SEWER
W PROPOSED WATER LINE
PROPOSED SWALE
PROPOSED 5' SIDEWALK (BY HOME BUILDER)
(DEVELOPER SHALL INSTALL SIDEWALKS ALONG ALL COMMON AREA
PROPOSED 6" UNDERDRAINS
6" SSD
RISER TC

STRUCTURE TABLE

| STR.# | TYPE | T.C. | CASTING TYPE | DIAMETER IN | DIRECTION IN | INV._IN | DIAMETER OUT | DIRECTION OUT | INV._OUT | SLOP |
|---|---|---|---|---|---|---|---|---|---|---|
| 124 | BEEHIVE INLET | 823.84 | R-4342 | 21 | SW | 813.84 | 21 | N | 813.74 | 0.30% |
| 125 | BEEHIVE INLET | 823.60 | R-4342 | 21 | SE | 814.21 | 21 | NE | 814.11 | 0.31% |
| 126 | BEEHIVE INLET | 822.00 | R-4342 | 21 | SW | 814.62 | 21 | NW | 814.52 | 0.31% |
| 127 | DOUBLE CURB INLET | 826.40 | R-3405 | 15 | SE | 815.05 | 21 | NE | 814.95 | 0.31% |
| 128 | BEEHIVE INLET | 823.50 | R-4342 | 15 | E | 815.56 | 15 | NW | 815.46 | 0.30% |
| 129 | BEEHIVE INLET | 821.00 | R-4342 | 12 | E | 816.14 | 15 | W | 816.04 | 0.30% |
| 137 | DOUBLE CURB INLET | 820.54 | R-3405 | | | | 15 | NE | 817.00 | 1.59% |

Know what's below.
Call before you dig.

| DATE | MARK | REVISIONS | BY |
|---|---|---|---|

DAVID J. STOEPPELWERTH
REGISTERED
No. 19358
STATE OF INDIANA
PROFESSIONAL ENGINEER

THIS DRAWING IS NOT INTENDED TO BE REPRESENTED AS A RETRACEMENT OR ORIGINAL BOUNDARY SURVEY, A ROUTE SURVEY OR A SURVEYOR LOCATION REPORT.

CERTIFIED: 2/1/12

David J. Stoeppelwerth


STOEPPELWERTH
ALWAYS ON
7965 East 106th Street, Fishers, IN 46038-2505
phone: 317.849.5935 fax: 317.849.5942


# SITE DEVELOPMENT PLAN

## BRIDGEWATER APARTMENTS

HAMILTON COUNTY, INDIANA

WESTFIELD

DRAWN BY: KRG
CHECKED BY: BKR
SHEET NO. C209
S & A JOB NO. 56030JUSL1

S:\56030JUS-L1\DWG\C209-Site Development Plan.dwg, 1/29/2013 1:18:26 PM, KGilson, 1:1

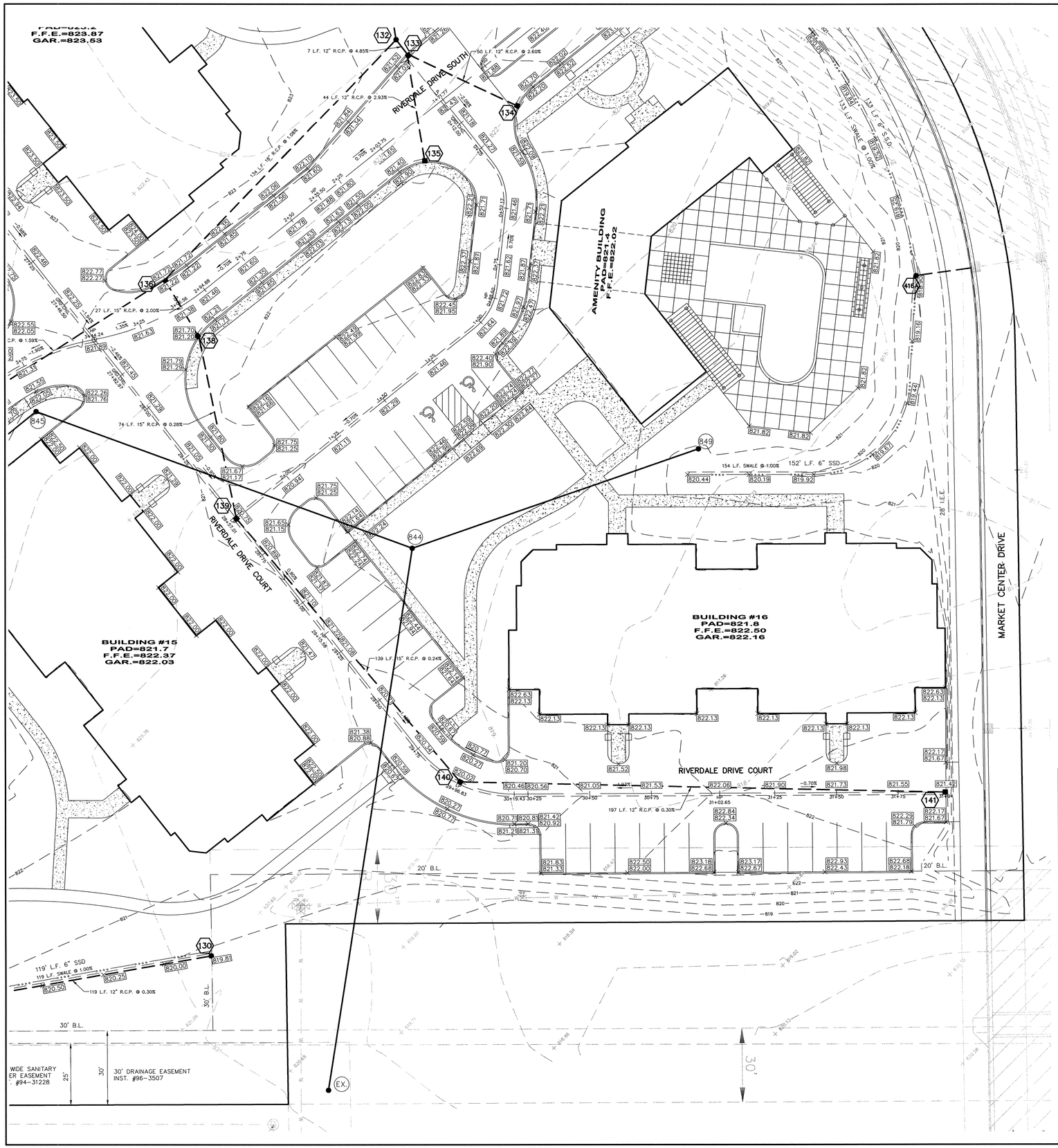


GRAPHIC SCALE

20 0 10 20

( IN FEET )
1 inch = 20 ft.

LEGEND

| | |
|---|---|
| B.L. | Building Line |
| H.P. | High Point |
| L.P. | Low Point |
| GRD.CHG | Grade Change |
| M.E. | Match Existing |
| 870 | EXISTING CONTOUR |
| | EXISTING SANITARY SEWER |
| | EXISTING STORM SEWER |
| 848.0 | PROPOSED GRADE |
| 870 | PROPOSED CONTOUR |
| | PROPOSED SANITARY SEWER |
| | PROPOSED STORM SEWER |
| W | PROPOSED WATER LINE |
| | PROPOSED SWALE |
| | PROPOSED 5' SIDEWALK (BY HOME BUILDER) (DEVELOPER SHALL INSTALL SIDEWALKS ALONG ALL COMMON AREA |
| | PROPOSED 6" UNDERDRAINS |
| | 6" SSD |
| | RISER TC |

GENERAL NOTES:

1.) BLUE REFLECTORS SHALL BE INSTALLED IN THE CENTER LINE OF THE PAVEMENT TO MARK FIRE HYDRANTS PER THE TOWN OF WESTFIELD'S UTILITY AND INFRASTRUCTURE CONSTRUCTION STANDARDS.

2.) ALL SSD'S (SUBSURFACE DRAINS) WILL NEED TO BE DOUBLE WALL SMOOTH BORE PERFORATED (HDPE) PIPE.

3.) ALL EXISTING OFF-SITE DRAIN TILES THAT ARE ENCOUNTERED SHALL BE TIED INTO THE PROPOSED STORM SEWER SYSTEM WITH A POSITIVE OUTFLOW. ANY TILE THAT IS ENCOUNTERED THAT IS COMPLETELY ON-SITE MUST BE CRUSHED AND ABANDONED.

4.)ALL PADS SHALL BE TESTED TO ASSURE A COMPACTION OF AT LEAST 95 PERCENT OF THE MAXIMUM DRY DENSITY USING THE STANDARD PROCTOR TEST METHOD.

5.)CONTRACTOR SHALL VERIFY LOCATION AND DEPTH OF ALL EXISTING UTILITIES PRIOR TO CONSTRUCTION TO CONFIRM THERE ARE NO CROSSING CONFLICTS. CONFLICTS THAT ARE DISCOVERED AFTER CONSTRUCTION BEGINS ARE SOLELY THE CONTRACTOR'S RESPONSIBILITY.

6.)CONTRACTOR TO PRESERVE EXISTING TREES AS MUCH AS POSSIBLE ESPECIALLY ALONG THE BOUNDARIES OF THIS PROJECT.

STRUCTURE TABLE

| STR.# | TYPE | T.C. | CASTING TYPE | DIAMETER IN | DIRECTION IN | INV._IN | DIAMETER OUT | DIRECTION OUT | INV._OUT | SLOPE |
|---|---|---|---|---|---|---|---|---|---|---|
| 130 | BEEHIVE INLET | 819.81 | R-4342 | | | | 12 | W | 816.50 | 0.30% |
| 132 | BEEHIVE INLET | 821.66 | R-1642 | 18 | SW | 813.75 | 18 | N | 813.65 | 1.48% |
| | | | | 12 | SE | 813.75 | | | | |
| 133 | CURB INLET | 821.59 | R-3287-10V | 12 | S | 814.20 | 12 | NW | 814.10 | 4.85% |
| | | | | 12 | SE | 814.20 | | | | |
| 134 | CURB INLET | 821.66 | R-3287-10V | | | | 12 | NW | 815.50 | 2.60% |
| 135 | CURB INLET | 821.53 | R-3287-10V | | | | 12 | N | 815.50 | 2.93% |
| 136 | CURB INLET | 821.24 | R-3287-10V | 15 | SW | 815.30 | 18 | NE | 815.20 | 1.08% |
| | | | | 15 | SE | 815.30 | | | | |
| 138 | CURB INLET | 821.22 | R-3287-10V | 15 | S | 815.94 | 15 | NW | 815.84 | 2.00% |
| 139 | CURB INLET | 820.75 | R-3405 | 15 | SE | 816.25 | 15 | N | 816.15 | 0.28% |
| 140 | CURB INLET | 820.02 | R-3405 | 12 | E | 816.68 | 15 | NW | 816.58 | 0.24% |
| 141 | CURB INLET | 821.07 | R-3405 | | | | 12 | W | 817.27 | 0.30% |

Know what's below.
Call before you dig.

| DATE | MARK | REVISIONS | BY |
|---|---|---|---|

DAVID J. STOEPPELWERTH
REGISTERED
No. 19358
STATE OF INDIANA
PROFESSIONAL ENGINEER

THIS DRAWING IS NOT INTENDED TO BE REPRESENTED AS A RETRACEMENT OR ORIGINAL BOUNDARY SURVEY, A ROUTE SURVEY OR A SURVEYOR LOCATION REPORT.

CERTIFIED: 2/1/12

David J. Stoeppelwerth


STOEPPELWERTH
ALWAYS ON
7965 East 106th Street, Fishers, IN 46038-5265
phone: 317.849.5935 fax: 317.849.5942


SITE DEVELOPMENT PLAN
BRIDGEWATER APARTMENTS
HAMILTON COUNTY, INDIANA
WESTFIELD

DRAWN BY: KRG
CHECKED BY: BKR
SHEET NO. C210
S & A JOB NO. 56030JUSL1

S:\56030JUS-L1\DWG\C210-Site Development Plan.dwg, 1/30/2013 9:23:07 AM, KGilson, 1:1

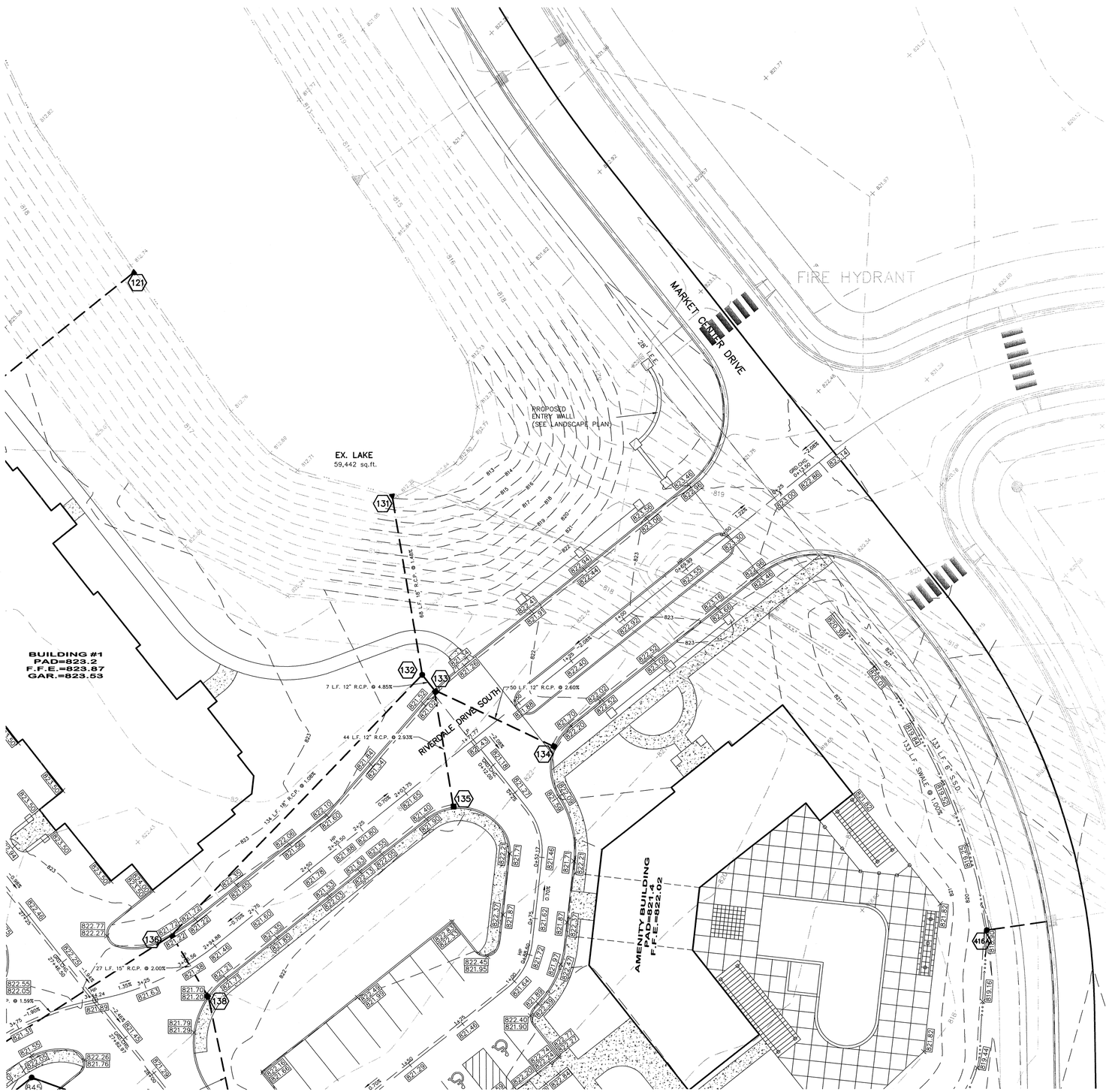

GRAPHIC SCALE

20 0 10 20

( IN FEET )
1 inch = 20 ft.

LEGEND

| | |
|---|---|
| B.L. | Building Line |
| H.P. | High Point |
| L.P. | Low Point |
| GRD.CHG | Grade Change |
| M.E. | Match Existing |
| 870 | EXISTING CONTOUR |
| | EXISTING SANITARY SEWER |
| | EXISTING STORM SEWER |
| 248.9 | PROPOSED GRADE |
| 870 | PROPOSED CONTOUR |
| | PROPOSED SANITARY SEWER |
| | PROPOSED STORM SEWER |
| W | PROPOSED WATER LINE |
| | PROPOSED SWALE |
| | PROPOSED 5' SIDEWALK (BY HOME BUILDER) (DEVELOPER SHALL INSTALL SIDEWALKS ALONG ALL COMMON AREA |
| | PROPOSED 6" UNDERDRAINS |
| | 6" SSD |
| | RISER TC |

GENERAL NOTES:

1.) BLUE REFLECTORS SHALL BE INSTALLED IN THE CENTER LINE OF THE PAVEMENT TO MARK FIRE HYDRANTS PER THE TOWN OF WESTFIELD'S UTILITY AND INFRASTRUCTURE CONSTRUCTION STANDARDS.

2.) ALL SSD'S (SUBSURFACE DRAINS) WILL NEED TO BE DOUBLE WALL SMOOTH BORE PERFORATED (HDPE) PIPE.

3.) ALL EXISTING OFF-SITE DRAIN TILES THAT ARE ENCOUNTERED SHALL BE TIED INTO THE PROPOSED STORM SEWER SYSTEM WITH A POSITIVE OUTFLOW. ANY TILE THAT IS ENCOUNTERED THAT IS COMPLETELY ON-SITE MUST BE CRUSHED AND ABANDONED.

4.)ALL PADS SHALL BE TESTED TO ASSURE A COMPACTION OF AT LEAST 95 PERCENT OF THE MAXIMUM DRY DENSITY USING THE STANDARD PROCTOR TEST METHOD.

5.)CONTRACTOR SHALL VERIFY LOCATION AND DEPTH OF ALL EXISTING UTILITIES PRIOR TO CONSTRUCTION TO CONFIRM THERE ARE NO CROSSING CONFLICTS. CONFLICTS THAT ARE DISCOVERED AFTER CONSTRUCTION BEGINS ARE SOLELY THE CONTRACTOR'S RESPONSIBILITY.

6.)CONTRACTOR TO PRESERVE EXISTING TREES AS MUCH AS POSSIBLE ESPECIALLY ALONG THE BOUNDARIES OF THIS PROJECT.

STRUCTURE TABLE

| STR.# | TYPE | T.C. | CASTING TYPE | DIAMETER IN | DIRECTION IN | INV._IN | DIAMETER OUT | DIRECTION OUT | INV._OUT | SLOPE |
|---|---|---|---|---|---|---|---|---|---|---|
| 131 | END SECTION | | | 18 | S | 812.65 | | | | |
| 132 | BEEHIVE INLET | 821.66 | R-1642 | 18<br>12 | SW<br>SE | 813.75<br>813.75 | 18 | N | 813.65 | 1.48% |
| 133 | CURB INLET | 821.59 | R-3287-10V | 12<br>12 | S<br>SE | 814.20<br>814.20 | 12 | NW | 814.10 | 4.85% |
| 134 | CURB INLET | 821.66 | R-3287-10V | | | | 12 | NW | 815.50 | 2.60% |
| 135 | CURB INLET | 821.53 | R-3287-10V | | | | 12 | N | 815.50 | 2.93% |
| 136 | CURB INLET | 821.24 | R-3287-10V | 15<br>15 | SW<br>SE | 815.30<br>815.30 | 18 | NE | 815.20 | 1.08% |
| 138 | CURB INLET | 821.22 | R-3287-10V | 15 | S | 815.94 | 15 | NW | 815.84 | 2.00% |

811 Know what's below. Call before you dig.

| DATE | MARK | REVISIONS | BY |
|---|---|---|---|

DAVID J. STOEPPELWERTH REGISTERED No. 19358 STATE OF INDIANA PROFESSIONAL ENGINEER

THIS DRAWING IS NOT INTENDED TO BE REPRESENTED AS A RETRACEMENT OR ORIGINAL BOUNDARY SURVEY, A ROUTE SURVEY OR A SURVEYOR LOCATION REPORT.

CERTIFIED: 2/1/12


STOEPPELWERTH
ALWAYS ON
7965 East 106th Street, Fishers, IN 46038-2505
phone: 317.849.5935 fax: 317.849.5942


# SITE DEVELOPMENT PLAN
# BRIDGEWATER APARTMENTS

HAMILTON COUNTY, INDIANA

WESTFIELD

DRAWN BY: KRG
CHECKED BY: BKR
SHEET NO. C211
S & A JOB NO. 56030JUSL1

S:\56030JUSL1\DWG\C211-Site Development Plan.dwg, 1/30/2013 9:24:56 AM, KGilison, 1:1

# THIS SHEET TO BE USED FOR EROSION CONTROL ONLY.

PERSON ONSITE RESPONSIBLE FOR EROSION CONTROL:
Doug Peters
Phone: 317-353-8311

The following is a list in sequence of construction activities to control soil erosion:

1. The contractor shall schedule a Pre-construction meeting with the City of Westfield prior to any constructing on the site being started. The contractor and/or developer shall notify IDEM and the City of Westfield 48 hours prior to start of construction.
2. Following the required pre-construction meeting the contractor shall construct the "posting information center" on the Northwest corner of Riverdale Drive South and Market Center Drive. The location of the posting information center is shown on Sheet C300-C301. The posting information center is the location where a copy of the approved IDEM Rule 5 Permit, Approved SWPP Plan, signed O&M Manual and Maintenance Logs are to be located. The contractor shall proceed to construct the construction entrance after all posting requirements have been met.
3. Immediately following the installation of the construction entrance, the contractor shall construct the maintenance and refueling area. Please refer to the maintenance and refueling area detail on Sheet C305.
4. After the maintenance and refueling area is constructed, the contractor shall construct the concrete washout area per the specifications on Sheet C305.
5. Prior to any earth moving the contractor shall install all silt fence as shown on Sheets C300 and C301. The details and specifications for silt fence installation are located on Sheet C305.
6. The contractor shall protect all existing inlets with drop inlet protection baskets and fiber mats as shown on Sheets C300 and C301. The details and specifications for the drop inlet baskets and fiber mats on Sheet C305.
7. When the "existing" site/construction limits are completely stabilized, the contractor shall start striping the existing top soil within the construction limits and stockpile on Lot 3 of The Bridgewater Marketplace, Section 2. Refer to Sheet C303 for location.
8. Contractor shall cut proposed swales. Swales shall be immediately seeded and mulched upon completion. At the time of site completion the erosion control blankets shall be installed (See #20 of this sequence).
9. The contractor shall proceed to grade the remainder of the site. The material to grade the site shall be excavated from Existing material stockpile shown on Sheet C300.
10. Contractor shall contact Westfield public works inspector when the connection to the existing manhole is made (317-804-3146) or (317-804-3149). Contractor shall excavate around existing manholes and expose the proposed connection points. The contractor to keep all disturbances to the surrounding areas to a minimum. Dirt, mud and debris shall be cleaned up and removed from the streets daily prior to the contractor leaving the site.
11. The contractor shall continue constructing the proposed sanitary sewer.
12. The proposed onsite storm sewer and sanitary sewer shall be installed concurrently with each other when crossings are encountered.
13. The contractor shall prepare the sub-grade for the proposed road system. If lime stabilization is the method chosen, dust shall be kept to a minimum. Dust shall be removed from the construction vehicles prior to leaving the site.
14. Contractor shall install water main.
15. Contractor shall install all concrete curbing.
16. Contractor shall have all other appropriate utilities installed.
17. Contractor shall install all asphalt pavement.
18. The Contractor shall install the proposed erosion control blanket in all swales as shown on Sheet C302. The details and specifications for the erosion control blanket can be found on Sheet C304 and C305.
19. The contractor shall permanent seed all areas between the back of curb and the constructed pads and all other areas that are permanent seed as illustrated on Sheet C302. The seed mixture and rate can be found on Sheet C305.
20. The contractor shall schedule a site inspection with the City of Westfield to insure that the site is stabilized. After the inspector approves the site conditions the contractor shall remove all temporary erosion control practices.
21. The post-construction erosion control practices then become the responsibility of the developer of this project.
22. The developer of this project shall continue to monitor this site for good house keeping on the post-construction BMP's until a NOT is filed with IDEM.

GRAPHIC SCALE

50 0 25 50

( IN FEET )
1 inch = 50 ft.

SF — Denotes Silt Fence

Denotes Construction Limits

*** Specific Points Where Stormwater Discharge Will Leave this Site:**
Stormwater will leave this site thru existing storm sewer systems (as shown)

Below Grade "Drop Inlet Protection Basket"

Temporary "Drop Inlet Protection Basket", "Sediment Control Devices",

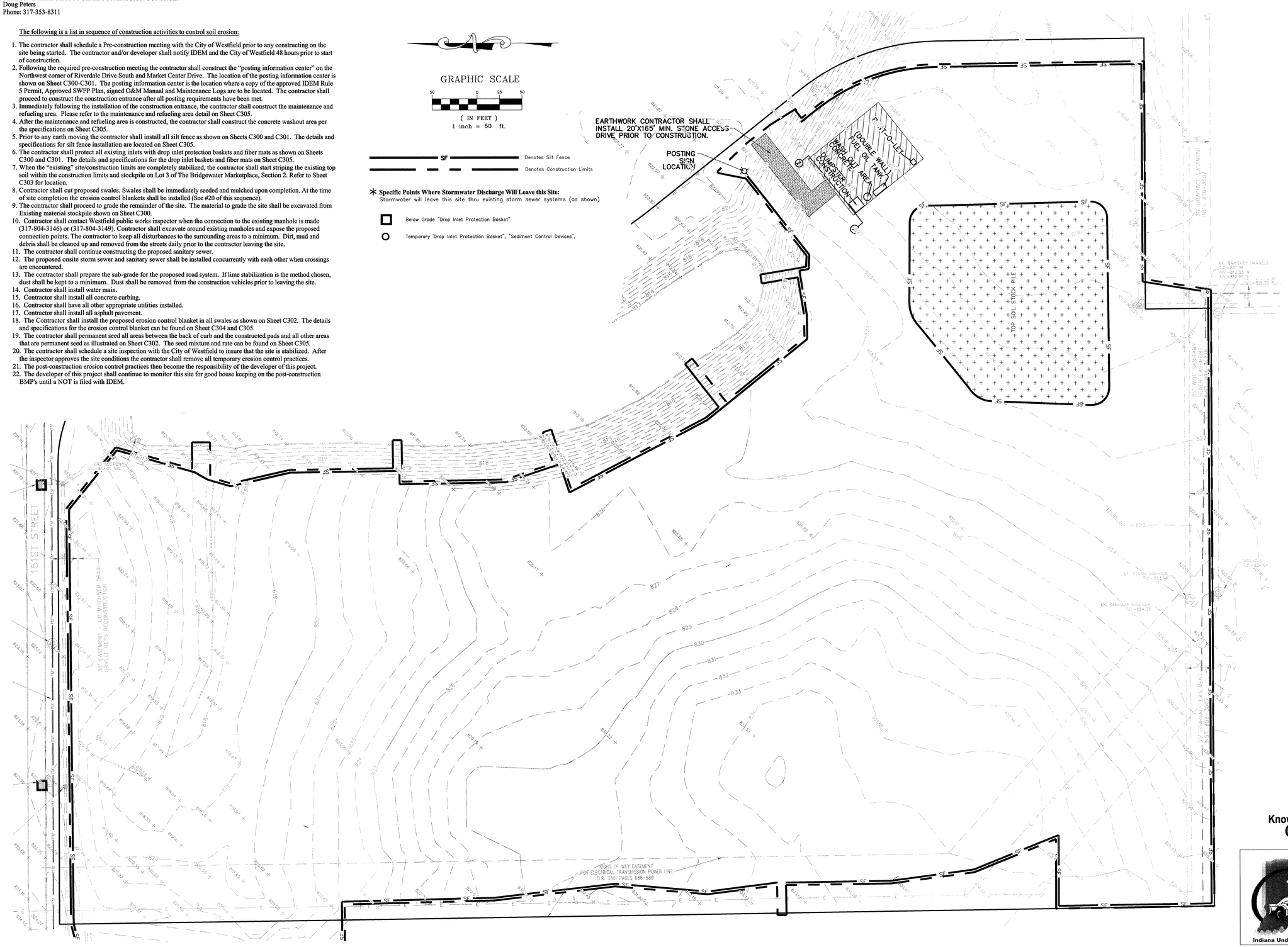


Know what's **below.**
**Call** before you dig.

IUPPS Dig Safely.
Indiana Underground Plant Protection Service

| DATE | MARK | REVISIONS | BY |
|---|---|---|---|

DAVID J. STOEPPELWERTH
REGISTERED No. 19358 STATE OF INDIANA
PROFESSIONAL ENGINEER

THIS DRAWING IS NOT INTENDED TO BE REPRESENTED AS A RETRACEMENT OR ORIGINAL BOUNDARY SURVEY, A ROUTE SURVEY OR A SURVEYOR LOCATION REPORT.
CERTIFIED: 2/1/12


STOEPPELWERTH
ALWAYS ON
7965 East 106th Street, Fishers, IN 46038-2505
phone: 317.849.5935 fax: 317.849.5942


INITIAL

STORM WATER POLL. & PREV. PLAN
BRIDGEWATER APARTMENTS
HAMILTON COUNTY, INDIANA
WESTFIELD

DRAWN BY: KRG
CHECKED BY: BKR
SHEET NO. C300
S & A JOB NO. 56030JUSL1

S:\56030JUSL1\DWG\C300-Initial Erosion.dwg, 1/29/2013 1:42:53 PM, KGilson, 1:1

# THIS SHEET TO BE USED FOR EROSION CONTROL ONLY.

PERSON ONSITE RESPONSIBLE FOR EROSION CONTROL:
Doug Peters
Phone: 317-353-8311

The following is a list in sequence of construction activities to control soil erosion:

1. The contractor shall schedule a Pre-construction meeting with the City of Westfield prior to any constructing on the site being started. The contractor and/or developer shall notify IDEM and the City of Westfield 48 hours prior to start of construction.
2. Following the required pre-construction meeting the contractor shall construct the "posting information center" on the Northwest corner of Riverdale Drive South and Market Center Drive. The location of the posting information center is shown on Sheet C300-C301. The posting information center is the location where a copy of the approved IDEM Rule 5 Permit, Approved SWPP Plan, signed O&M Manual and Maintenance Logs are to be located. The contractor shall proceed to construct the construction entrance after all posting requirements have been met.
3. Immediately following the installation of the construction entrance, the contractor shall construct the maintenance and refueling area. Please refer to the maintenance and refueling area detail on Sheet C305.
4. After the maintenance and refueling area is constructed, the contractor shall construct the concrete washout area per the specifications on Sheet C305.
5. Prior to any earth moving the contractor shall install all silt fence as shown on Sheets C300 and C301. The details and specifications for silt fence installation are located on Sheet C305.
6. The contractor shall protect all existing inlets with drop inlet protection baskets and fiber mats as shown on Sheets C300 and C301. The details and specifications for the drop inlet baskets and fiber mats on Sheet C305.
7. When the "existing" site/construction limits are completely stabilized, the contractor shall start striping the existing top soil within the construction limits and stockpile on Lot 3 of The Bridgewater Marketplace, Section 2. Refer to Sheet C303 for location.
8. Contractor shall cut proposed swales. Swales shall be immediately seeded and mulched upon completion. At the time of site completion the erosion control blankets shall be installed (See #20 of this sequence).
9. The contractor shall proceed to grade the remainder of the site. The material to grade the site shall be excavated from Existing material stockpile shown on Sheet C300.
10. Contractor shall contact Westfield public works inspector when the connection to the existing manhole is made (317-804-3146) or (317-804-3149). Contractor shall excavate around existing manholes and expose the proposed connection points. The contractor to keep all disturbances to the surrounding areas to a minimum. Dirt, mud and debris shall be cleaned up and removed from the streets daily prior to the contractor leaving the site.
11. The contractor shall continue constructing the proposed sanitary sewer.
12. The proposed onsite storm sewer and sanitary sewer shall be installed concurrently with each other when crossings are encountered.
13. The contractor shall prepare the sub-grade for the proposed road system. If lime stabilization is the method chosen, dust shall be kept to a minimum. Dust shall be removed from the construction vehicles prior to leaving the site.
14. Contractor shall install water main.
15. Contractor shall install all concrete curbing.
16. Contractor shall have all other appropriate utilities installed.
17. Contractor shall install all asphalt pavement.
18. The Contractor shall install the proposed erosion control blanket in all swales as shown on Sheet C302. The details and specifications for the erosion control blanket can be found on Sheet C304 and C305.
19. The contractor shall permanent seed all areas between the back of curb and the constructed pads and all other areas that are permanent seed as illustrated on Sheet C302. The seed mixture and rate can be found on Sheet C305.
20. The contractor shall schedule a site inspection with the City of Westfield to insure that the site is stabilized. After the inspector approves the site conditions the contractor shall remove all temporary erosion control practices.
21. The post-construction erosion control practices then become the responsibility of the developer of this project.
22. The developer of this project shall continue to monitor this site for good house keeping on the post-construction BMP's until a NOT is filed with IDEM.

GRAPHIC SCALE
50 0 25 50
( IN FEET )
1 inch = 50 ft.

SF — Denotes Silt Fence
— — Denotes Construction Limits

*** Specific Points Where Stormwater Discharge Will Leave this Site:**
Stormwater will leave this site thru existing storm sewer systems (as shown)

Below Grade "Drop Inlet Protection Basket"

Temporary "Drop Inlet Protection Basket", "Sediment Control Devices",

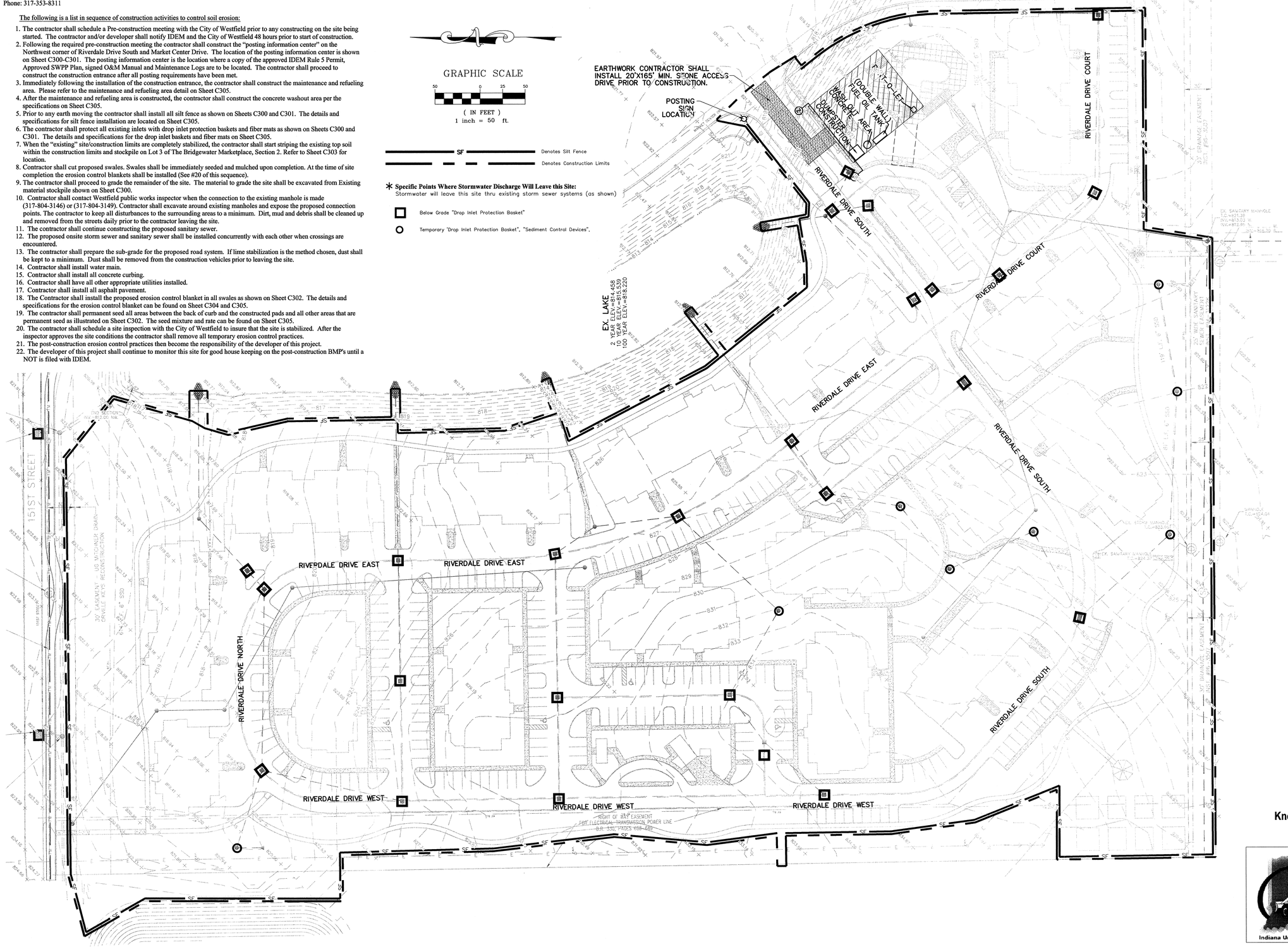


Know what's **below.**
**Call** before you dig.

IUPPS Dig Safely.
Indiana Underground Plant Protection Service

TEMPORARY
STORM WATER POLL. & PREV. PLAN
BRIDGEWATER APARTMENTS
WESTFIELD HAMILTON COUNTY, INDIANA

| DATE | MARK | REVISIONS | BY |
|---|---|---|---|

DAVID J. STOEPPELWERTH REGISTERED No. 19358 STATE OF INDIANA PROFESSIONAL ENGINEER

THIS DRAWING IS NOT INTENDED TO BE REPRESENTED AS A RETRACEMENT OR ORIGINAL BOUNDARY SURVEY, A ROUTE SURVEY OR A SURVEYOR LOCATION REPORT.
CERTIFIED: 2/1/12


STOEPPELWERTH
ALWAYS ON
7965 East 106th Street, Fishers, IN 46038-2505
phone: 317.849.5935 fax: 317.849.5942


DRAWN BY: KRG
CHECKED BY: BKR
SHEET NO. C301
S & A JOB NO. 56030JUSL1

S:\56030JUSL1\DWG\C301-Temp Erosion.dwg, 1/30/2013 9:40:24 AM, KGilson, 1:1

# THIS SHEET TO BE USED FOR EROSION CONTROL ONLY.

PERSON ONSITE RESPONSIBLE FOR EROSION CONTROL:
Doug Peters
Phone: 317-353-8311

GRAPHIC SCALE

50 0 25 50

( IN FEET )
1 inch = 50 ft.

SF — Denotes Silt Fence

Denotes Construction Limits

*** Specific Points Where Stormwater Discharge Will Leave this Site:**
Stormwater will leave this site thru existing storm sewer systems (as shown)

Below Grade "Drop Inlet Protection Basket"

Temporary "Drop Inlet Protection Basket", "Sediment Control Devices",

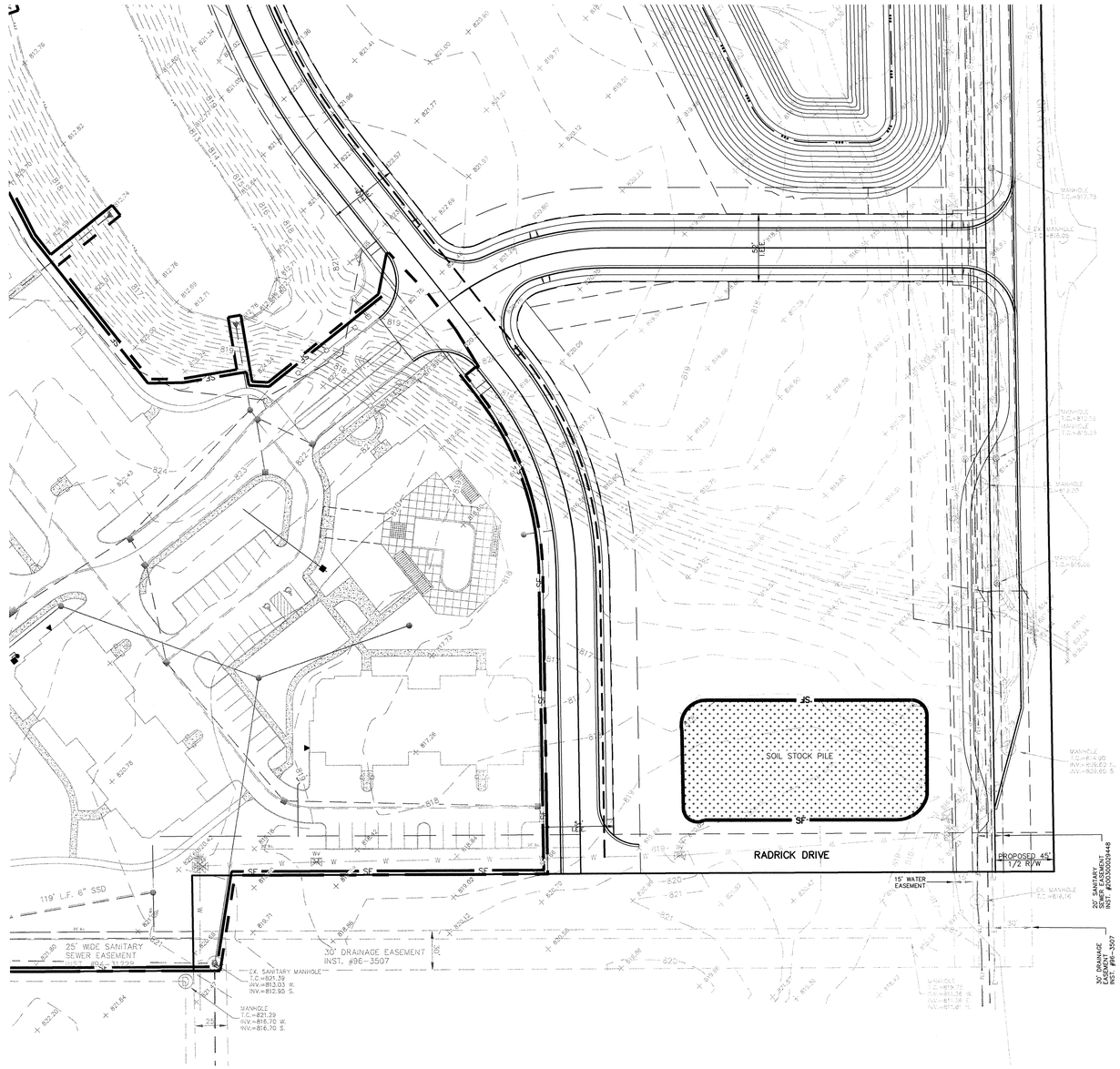


Know what's **below.**
**Call** before you dig.

IUPPS Dig Safely.
Indiana Underground Plant Protection Service

TEMPORARY

STORM WATER POLL. & PREV. PLAN

BRIDGEWATER APARTMENTS

HAMILTON COUNTY, INDIANA

WESTFIELD

| DATE | MARK | REVISIONS | BY |
|---|---|---|---|

THIS DRAWING IS NOT INTENDED TO BE REPRESENTED AS A RETRACEMENT OR ORIGINAL BOUNDARY SURVEY, A ROUTE SURVEY OR A SURVEYOR LOCATION REPORT.

CERTIFIED: 2/1/12

DAVID J. STOEPPELWERTH
REGISTERED No. 19358 STATE OF INDIANA
PROFESSIONAL ENGINEER


STOEPPELWERTH & SONS
ALWAYS ON
7965 East 106th Street, Fishers, IN 46038-2505
phone: 317.849.5935 fax: 317.849.5942


DRAWN BY: KRG
CHECKED BY: BKR
SHEET NO. C302
S & A JOB NO. 56030JUSL1

S:\56030JUSL1\DWG\C302-Temp Erosion.dwg, 1/29/2013 1:48:37 PM, KGilson, 1:1

# THIS SHEET TO BE USED FOR EROSION CONTROL ONLY.

PERSON ONSITE RESPONSIBLE FOR EROSION CONTROL:
Doug Peters
Phone: 317-353-8311

The following is a list in sequence of construction activities to control soil erosion:

1. The contractor shall schedule a Pre-construction meeting with the City of Westfield prior to any constructing on the site being started. The contractor and/or developer shall notify IDEM and the City of Westfield 48 hours prior to start of construction.
2. Following the required pre-construction meeting the contractor shall construct the "posting information center" on the Northwest corner of Riverdale Drive South and Market Center Drive. The location of the posting information center is shown on Sheet C300-C301. The posting information center is the location where a copy of the approved IDEM Rule 5 Permit, Approved SWPP Plan, signed O&M Manual and Maintenance Logs are to be located. The contractor shall proceed to construct the construction entrance after all posting requirements have been met.
3. Immediately following the installation of the construction entrance, the contractor shall construct the maintenance and refueling area. Please refer to the maintenance and refueling area detail on Sheet C305.
4. After the maintenance and refueling area is constructed, the contractor shall construct the concrete washout area per the specifications on Sheet C305.
5. Prior to any earth moving the contractor shall install all silt fence as shown on Sheets C300 and C301. The details and specifications for silt fence installation are located on Sheet C305.
6. The contractor shall protect all existing inlets with drop inlet protection baskets and fiber mats as shown on Sheets C300 and C301. The details and specifications for the drop inlet baskets and fiber mats on Sheet C305.
7. When the "existing" site/construction limits are completely stabilized, the contractor shall start striping the existing top soil within the construction limits and stockpile on Lot 3 of The Bridgewater Marketplace, Section 2. Refer to Sheet C303 for location.
8. Contractor shall cut proposed swales. Swales shall be immediately seeded and mulched upon completion. At the time of site completion the erosion control blankets shall be installed (See #20 of this sequence).
9. The contractor shall proceed to grade the remainder of the site. The material to grade the site shall be excavated from Existing material stockpile shown on Sheet C300.
10. Contractor shall contact Westfield public works inspector when the connection to the existing manhole is made (317-804-3146) or (317-804-3149). Contractor shall excavate around existing manholes and expose the proposed connection points. The contractor to keep all disturbances to the surrounding areas to a minimum. Dirt, mud and debris shall be cleaned up and removed from the streets daily prior to the contractor leaving the site.
11. The contractor shall continue constructing the proposed sanitary sewer.
12. The proposed onsite storm sewer and sanitary sewer shall be installed concurrently with each other when crossings are encountered.
13. The contractor shall prepare the sub-grade for the proposed road system. If lime stabilization is the method chosen, dust shall be kept to a minimum. Dust shall be removed from the construction vehicles prior to leaving the site.
14. Contractor shall install water main.
15. Contractor shall install all concrete curbing.
16. Contractor shall have all other appropriate utilities installed.
17. Contractor shall install all asphalt pavement.
18. The Contractor shall install the proposed erosion control blanket in all swales as shown on Sheet C302. The details and specifications for the erosion control blanket can be found on Sheet C304 and C305.
19. The contractor shall permanent seed all areas between the back of curb and the constructed pads and all other areas that are permanent seed as illustrated on Sheet C302. The seed mixture and rate can be found on Sheet C305.
20. The contractor shall schedule a site inspection with the City of Westfield to insure that the site is stabilized. After the inspector approves the site conditions the contractor shall remove all temporary erosion control practices.
21. The post-construction erosion control practices then become the responsibility of the developer of this project.
22. The developer of this project shall continue to monitor this site for good house keeping on the post-construction BMP's until a NOT is filed with IDEM.

GRAPHIC SCALE

50 0 25 50

( IN FEET )
1 inch = 50 ft.

Denotes Construction Limits

*** Specific Points Where Stormwater Discharge Will Leave this Site:**
Stormwater will leave this site thru existing storm sewer systems (as shown)

Denotes permanent seeding & mulch areas
Seeding rate: 150#/acre or 3#/1000 S.F.
Seeding mixture: 25% creeping red fescue
35% perennial rye
40% Kentucky bluegrass

Denotes seeding w/fiber blanket #S150 by North American Green
Seeding rate: 110#/acre or 2.5#/1000 S.F.
Seeding mixture: 38% Kentucky 31 fescue
19% perennial rye
19% annual rye
14% orchard grass
10% Kentucky bluegrass

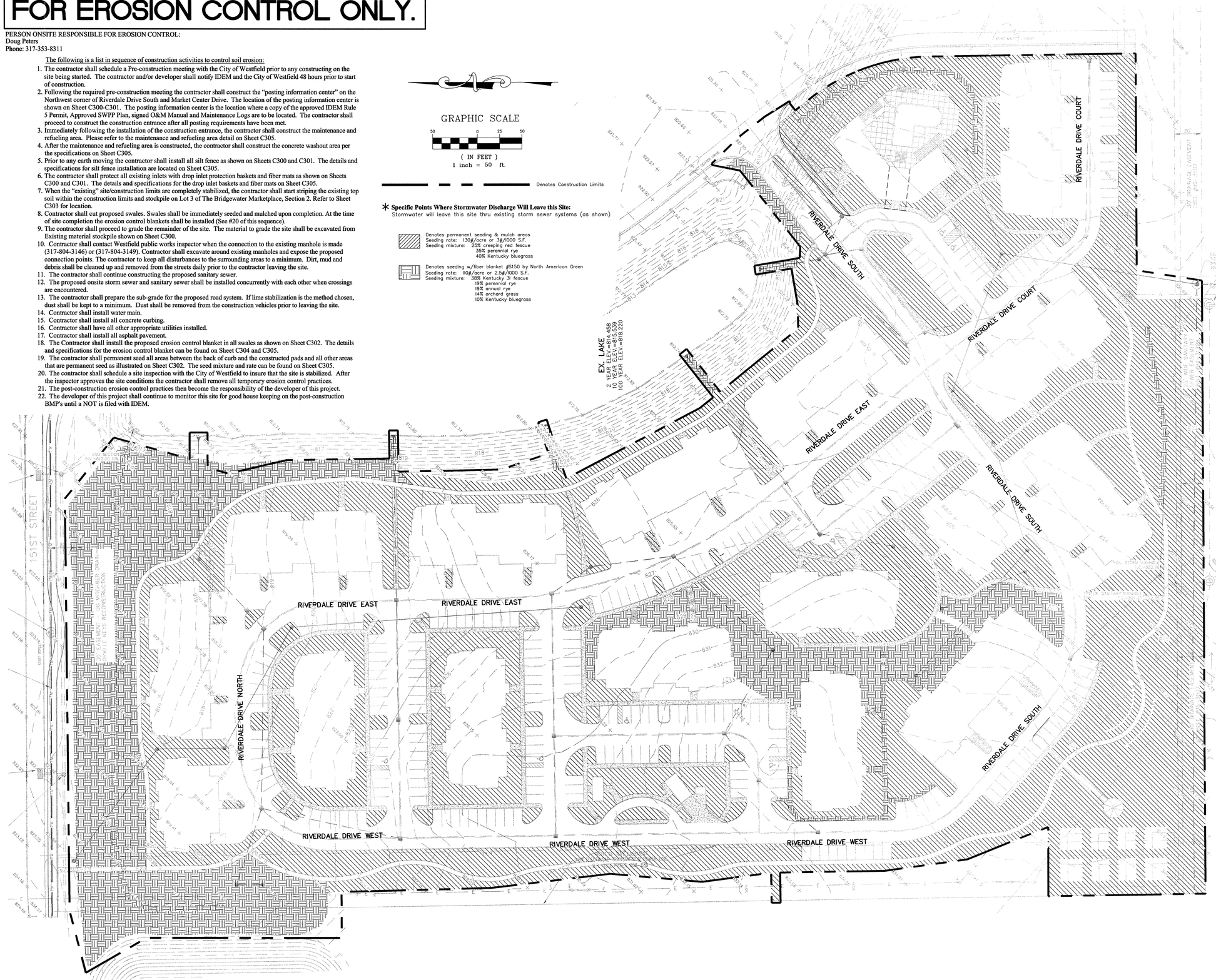


NOTE:
1. THE EROSION CONTROL PLAN MUST BE EXECUTED BEFORE ANY CONSTRUCTION COMMENCES.
2. EROSION CONTROL MATERIAL MUST BE APPROVED BY THE WPWD INSPECTORS PRIOR TO INSTALLATION.
3. ADDITIONAL EROSION CONTROL MEASURES MAY BE REQUIRED IN THE FIELD BY THE WPWD INSPECTOR.
4. IF THE SITE REMAINS INACTIVE FOR A PERIOD OF 2 WEEKS , THEN STABILIZATION IS REQUIRED TO TAKE PLACE IN THE FORM OF TEMPORARY SEEDING, MULCH, OR SPRAY ON POLYMER.

Seedbed Preparation for Permanent Seeding

1. Test soil to determine pH and nutrient levels. (Contact you county SWCD or Cooperative Extension office for assistance and soils information, including available testing services.)

2. If soil pH is unsuitable for the species to be seeded, apply lime according to test recommendations.

3. Fertilize as recommended by the soil test. If testing was not done, consider applying 400-600 lbs./acre of 12-12-12 analysis, or equivalent, fertilizer.

4. Till the soil to obtain a uniform seedbed, working the fertilizer and lime into the soil 2-4 in. deep with a disk or rake operated across the slope.

811
Know what's **below.**
**Call** before you dig.

IUPPS Dig Safely.
Indiana Underground Plant Protection Service

| DATE | MARK | REVISIONS | BY |
|---|---|---|---|

DAVID T. STOEPPELWERTH
REGISTERED
No. 19358
STATE OF INDIANA
PROFESSIONAL ENGINEER

THIS DRAWING IS NOT INTENDED TO BE REPRESENTED AS A RETRACEMENT OR ORIGINAL BOUNDARY SURVEY, A ROUTE SURVEY OR A SURVEYOR LOCATION REPORT.
CERTIFIED: 2/1/12


STOEPPELWERTH
ALWAYS ON
7965 East 116th Street, Fishers, IN 46038-2505
phone: 317.849.5935 fax: 317.849.5942


PERMANENT
STORM WATER POLL. & PREV. PLAN
BRIDGEWATER APARTMENTS
HAMILTON COUNTY, INDIANA
WESTFIELD

DRAWN BY: KRG
CHECKED BY: BKR
SHEET NO. C303
S & A JOB NO. 56030JUSL1

S:\56030JUS-L1\DWG\C303-Perm. Erosion.dwg, 1/30/2013 10:44:56 AM, KGilson, 1:1

# THIS SHEET TO BE USED FOR EROSION CONTROL ONLY.

Bridgewater Apartments

SITE NAME
The area scheduled for construction is known as "Bridgewater Apartments " (hereinafter referred to as the "Project").

PROJECT LOCATION
The property is located at the Southwest corner of 151st Street and Gray Road.
Latitude: 40° 00 ' 04 " N Longitude: 86 ° 06' 26" W

OWNER'S INFORMATION
Justus at Bridgewater LLC
1398 N. Shadeland Ave.
Indianapolis, Indiana 46219
PHONE: 317-353-8311
CONTACT: Doug Peters

OPERATOR'S INFORMATION
Justus at Bridgewater LLC
1398 N. Shadeland Ave.
Indianapolis, Indiana 46219
PHONE: 317-353-8311
CONTACT: Doug Peters

NOTICE OF INTENT
All parties defined as owners or operators must submit a Notice of Intent (NOI) at least 48 hours prior to commencement of on-site construction activities. Submittal of late NOI's is not prohibited; however, authorization under the construction general permit is only for discharges that occur after permit coverage is granted. Unpermitted discharges may be subject to enforcement actions by the EPA. For the purposes of this permit, an operator is defined as any party meeting either of the following requirements:

a) The party has operational control over construction plans and specifications, including the ability to make modifications to those plans and specifications.

b) The party has day-to-day operational control of those activities at a project that are necessary to ensure compliance with a stormwater pollution prevention plan for the site or other permit conditions.

A1 - Plan Index
See below:

A2 - 11" x 17" PLAT
This drawing is attached in the O & M Manual.

A3 - PROJECT NARRATIVE
This project includes the construction of 16 Apartments buildings and Amenity Area. Bridgewater Apartments consists of approximately 26.03 acres. Construction will include pad grades for the Buildings, associated roadways, landscaping, and drainage infrastructure.

A4 - VICINITY MAP
A copy of the vicinity map is shown on the Title Sheet.

A5 - LEGAL DESCRIPTION OF PROJECT SITE
The site is a part of the following tract of land as described on the Title Sheet.
Latitude: 40° 00 ' 04 " N Longitude: 86 ° 06' 26" W

A6 - LOCATION OF ALL LOTS AND PROPOSED SITE IMPROVEMENTS
The site will be developed as shown on the Site Plans. Please refer to Sheets C200-C205 for detail.

A7 - HYDROLOGIC UNIT CODE (HUC)
05120201090030

A8 - STATE AND FEDERAL WATER QUALITY PERMITS
IDEM Rule 5

A9 - SPECIFIC POINT WHERE STORMWATER DISCHARGE WILL LEAVE THE SITE
Stormwater will discharge into existing lake and leave the site through an existing pipe.

A10 - LOCATION AND NAME OF ALL WETLANDS, LAKES, AND WATERCOURSES ON AND ADJACENT TO THE SITE
None

A11 - IDENTIFICATION ALL RECEIVING WATERS
Mitchner Drain

A12 - IDENTIFICATION OF ALL POTENTIAL DISCHARGES TO GROUND WATER
None

A13 - 100-YEAR FLOODPLAINS, FLOODWAYS, AND FLOODWAY FRINGES
The site does not lie within a floodplain, floodway, or floodway fringe. The information was obtained from Flood Insurance Rate Map Panel 18057C0140F & 18057C0138F for Hamilton County, Indiana.

A14 - PRE-CONSTRUCTION AND POST-CONSTRUCTION ESTIMATE OF PEAK DISCHARGE
Allowable release rates: 10 Year =3.306 cfs 100 Year = 9.917 cfs
Post construction release rates: 10 Year=2.598 cfs 100 year=9.898 cfs

A15 - ADJACENT LAND USE
North: Residential
East: Commercial
South: Commercial
West: Residential

A16 - LOCATIONS AND APPROXIMATE BOUNDARIES OF ALL DISTURBED AREAS
See Sheet C200-C205

A17 - IDENTIFICATION OF EXISTING VEGETATIVE COVER
The site consist of crop residue.

A18 - SOILS MAP INCLUDING SOIL DESCRIPTIONS AND LIMITATIONS
Soil information from the Hamilton County Soil survey is shown on Sheet C305.

A19 - LOCATIONS, SIZE, AND DIMENSIONS OF PROPOSED STORMWATER SYSTEMS
Locations of stormwater systems: Sheets C206-C211 and C600-C603
Size of storm sewers: Sheet C600-C603
Details of storm inlets and manholes: Sheets C600-C603 and C801.

A20 - PLANS FOR ANY OFF-SITE CONSTRUCTION ACTIVITIES ASSOCIATED WITH THIS PROJECT
None

A21 - LOCATIONS OF PROPOSED SOIL STOCKPILES AND/OR BORROW/DISPOSAL AREAS
Top soil Stockpile to be located on Lot 3 in the Bridgewater Marketplace, Section 2. See Sheet C302 for detail.

A22 - EXISTING SITE TOPOGRAPHY
Refer to Sheet C100-C101

A23 - PROPOSED FINAL SITE TOPOGRAPHY
Refer to Sheet C206-C211

B1 - DESCRIPTION OF POTENTIAL POLLUTANT SOURCES ASSOCIATED WITH CONSTRUCTION ACTIVITIES
The following potential pollutant sources may be associated with construction activities on site:

1. Material storage areas (more specifically described below)
2. Construction waste material
3. Fuel storage areas and fueling stations
4. Exposed soils
5. Leaking vehicles and equipment
6. Sanitary waste from temporary toilet facilities
7. Litter
8. Windblown dust
9. Soil tracking off site from construction equipment

The following construction materials will be staged or stored on site at various points during development of the site.

1. Structural fill
2. Road base
3. Concrete drainage pipe
4. Concrete culverts
5. Precast concrete manholes

B2 - SEQUENCE DESCRIBING STORMWATER QUALITY MEASURE IMPLEMENTATION RELATIVE TO LAND-DISTURBING ACTIVITIES

1. The contractor shall schedule a Pre-construction meeting with the City of Westfield prior to any constructing on the site being started. The contractor and/or developer shall notify IDEM and the City of Westfield 48 hours prior to start of construction.
2. Following the required pre-construction meeting the contractor shall construct the "posting information center" on the Northwest corner of Riverdale Drive South and Market Center Drive. The location of the posting information center is shown on Sheet C300-C301. The posting information center is the location where a copy of the approved IDEM Rule 5 Permit, Approved SWPP Plan, signed O&M Manual and Maintenance Logs are to be located. The contractor shall proceed to construct the construction entrance after all posting requirements have been met.
3. Immediately following the installation of the construction entrance, the contractor shall construct the maintenance and refueling area. Please refer to the maintenance and refueling area detail on Sheet C305.
4. After the maintenance and refueling area is constructed, the contractor shall construct the concrete washout area per the specifications on Sheet C305.
5. Prior to any earth moving the contractor shall install all silt fence as shown on Sheets C300 and C301. The details and specifications for silt fence installation are located on Sheet C305.
6. The contractor shall protect all existing inlets with drop inlet protection baskets and fiber mats as shown on Sheets C300 and C301. The details and specifications for the drop inlet baskets and fiber mats on Sheet C305.
7. When the "existing" site/construction limits are completely stabilized, the contractor shall start striping the existing top soil within the construction limits and stockpile on Lot 3 of The Bridgewater Marketplace, Section 2. Refer to Sheet C302 for location.
8. Contractor shall cut proposed swales. Swales shall be immediately seeded and mulched upon completion. At the time of site completion the erosion control blankets shall be installed (See #20 of this sequence).
9. The contractor shall proceed to grade the remainder of the site. The material to grade the site shall be excavated from Existing material stockpile shown on Sheet C300.
10. Contractor shall contact Westfield public works inspector when the connection to the existing manhole is made (317-804-3146) or (317-804-3149). Contractor shall excavate around existing manholes and expose the proposed connection points. The contractor to keep all disturbances to the surrounding areas to a minimum. Dirt, mud and debris shall be cleaned up and removed from the streets daily prior to the contractor leaving the site.
11. The contractor shall continue constructing the proposed sanitary sewer.
12. The proposed onsite storm sewer and sanitary sewer shall be installed concurrently with each other when crossings are encountered.
13. The contractor shall prepare the sub-grade for the proposed road system. If lime stabilization is the method chosen, dust shall be kept to a minimum. Dust shall be removed from the construction vehicles prior to leaving the site.
14. Contractor shall install water main.
15. Contractor shall install all concrete curbing.
16. Contractor shall have all other appropriate utilities installed.
17. Contractor shall install all asphalt pavement.
18. The Contractor shall install the proposed erosion control blanket in all swales as shown on Sheet C302. The details and specifications for the erosion control blanket can be found on Sheet C303 and C305.
19. The contractor shall permanent seed all areas between the back of curb and the constructed pads and all other areas that are permanent seed as illustrated on Sheet C302. The seed mixture and rate can be found on Sheet C305.
20. The contractor shall schedule a site inspection with the City of Westfield to insure that the site is stabilized. After the inspector approves the site conditions the contractor shall remove all temporary erosion control practices.
21. The post-construction erosion control practices then become the responsibility of the developer of this project.
22. The developer of this project shall continue to monitor this site for good house keeping on the post-construction BMP's until a NOT is filed with IDEM.

B3 - STABLE CONSTRUCTION ENTRANCE LOCATIONS AND SPECIFICATIONS
Construction entrance will be in place prior to this phase of construction. Entrance is shown for reference on Sheet C300 & C301.

B4 - SEDIMENT CONTROL MEASURES FOR SHEET FLOW AREAS
Sheet flow areas will be protected by seed and mulch or hydro seeding. Erosion control blankets will be installed on sloped areas where the slope exceeds 6:1 (horizontal to vertical). Silt fencing will be utilized to minimize runoff from construction areas as identified on Sheets C300-C302. Refer to Sheet C304 for details.

B5 - SEDIMENT CONTROL MEASURES FOR CONCENTRATED FLOW AREAS
The swales will be protected with an erosion control blanket immediately following their construction as shown on Sheet C303.

B6 - STORM SEWER INLET PROTECTION MEASURE LOCATIONS AND SPECIFICATIONS
The contractor has the option to use one of several storm sewer inlet protection methods, depending on the inlet location and the stage of construction. Refer to Sheets C300-C301 for locations and refer to Sheet C304 for details. Manufactured products such as the Catch-All products may also be used at the contractor's discretion. Manufactured products shall be installed in accordance with the manufacturer's specifications. Straw bales will not be allowed as inlet protection measures. Coconut fiber mats are recommended. All inlet protection measures must be approved by the City of Westfield inspector.

B7 - RUNOFF CONTROL MEASURES
The silt fencing will be utilized to slow runoff and minimize sediment discharge. Refer to Sheets C300-C301 for additional information.

B8 - STORMWATER OUTLET PROTECTION SPECIFICATIONS
Existing Lake

B9 - GRADE STABILIZATION STRUCTURE LOCATIONS AND SPECIFICATIONS
Grade stabilization locations and specifications.
See Sheets C300-C303 for additional information.

B10 - LOCATION, DIMENSIONS, SPECIFICATIONS, AND CONSTRUCTION DETAILS OF EACH STORMWATER QUALITY MEASURE
Each measure is shown on along with appropriate details and specifications. Shown on Sheet C304.

B11 - TEMPORARY SURFACE STABILIZATION METHODS APPROPRIATE FOR EACH SEASON
Refer to Sheet C304, within the Seasonal Soil Protection Chart.

B12 - PERMANENT SURFACE STABILIZATION SPECIFICATIONS
Refer to Sheet C304, within the Seasonal Soil Protection Chart.

B13 - MATERIAL HANDLING AND SPILL PREVENTION PLAN

Solid Waste Disposal

No solid material, including building materials, is permitted to be discharged to surface waters or buried on site. All solid waste materials, including disposable materials incidental to the construction activity, must be collected in containers or closed dumpsters. The collection containers must be emptied periodically and the collected material hauled to a landfill permitted by the State and/or appropriate local municipality to accept the waste for disposal.

A foreman or supervisor should be designated in writing to oversee, enforce, and instruct construction workers on proper solid waste procedures.

Hazardous Waste

Whenever possible, minimize the use of hazardous materials and generation of hazardous wastes. All hazardous waste materials will be disposed in the manner specified by federal, state, or local regulations or by the manufacturer.

Use containment berms in fueling and maintenance areas and where potential for spills is high. A foreman or supervisor should be designated in writing to oversee, enforce and instruct construction workers on proper hazardous waste procedures. The location of any hazardous waste storage areas should be indicated on the stormwater pollution prevention plan by the operator following on-site location of the facility.

Dust Control/Off-site Vehicle Tracking
During construction, water trucks should be used, as needed, by each contractor or subcontractor to reduce dust. After construction, the site should be stabilized to reduce dust. Construction traffic should enter and exit the site at a Construction Entrance with a rock pad or equivalent device. The purpose of the rock pad is to minimize the amount of soil and mud that is tracked into existing streets. If sediment escapes the construction site, off-site accumulations of sediment must be removed at a frequency sufficient to minimize offsite impacts.

Sanitary/Septic

Contractors and subcontractors must comply with all state and local sanitary sewer, portable toilet, or septic system regulations. Sanitary facilities shall be provided at the site by each contractor or subcontractor throughout construction activities. The sanitary facilities should be utilized by all construction personnel and be serviced regularly. All expenses associated with providing sanitary facilities are the responsibility of the contractors and subcontractors.

The location of any sanitary facilities should be indicated on the stormwater pollution prevention plan by the operator following on-site location of said facilities.

Water Source

Water used to establish and maintain grass, to control dust, and for other construction purposes must originate from a public water supply or private well approved by the State or local health department.

Equipment Fueling and Storage Areas

Equipment fueling, maintenance, and cleaning should only be competed in protected areas (i.e., bermed area). Leaking equipment and maintenance fluids will be collected and not allowed to discharge into soil where they may be washed away during a rain event.

Equipment t wash down (except for wheel washes) should take place within an area surrounded by a berm. The use of detergents is prohibited.

Hazardous Material Storage

Chemicals, paints, solvents, fertilizers, and other toxic or hazardous materials should be stored in their original containers (if original container is not re-sealable, store the products in clearly labeled, waterproof containers). Except during application, the containers should be kept in trucks or in bermed areas within covered storage facilities. Runoff containing such materials shall be collected, removed from the site, and disposed of in accordance with the federal, state, and local regulations.

As may be required by federal, state, or local regulations, the Contractor should have a Hazardous Materials Management Plan and/or Hazardous Materials Spill Prevention Program in place. A foreman or supervisor should be designated in writing to oversee, enforce, and instruct construction workers on proper hazardous materials storage and handling procedures. The location of any hazardous material storage areas should be indicated on the stormwater pollution prevention plan by the operator following on-site location of the storage areas.

Spill Response Directions

In the event of small spills, please contact the construction supervisor. In the event of spills that require removal of soils or other materials, please contact the construction supervisor, developer, County Surveyor's Office and the Local Fire Department.

In the event of spills that have potential groundwater or surface water contamination, please contact the construction supervisor, developer, County Surveyor's Office, Local Fire Department and IDEM.

CONTACT NUMBERS:

| | |
|---|---|
| Emergency Response | 911 |
| Westfield Fire Department | (317) 804-3333 |
| Westfield Police Department | (317) 804-3200 |
| Indiana Department of Natural Resources | (317) 477-8773 |
| Indiana Department of Environmental Management | (317) 233-7745 |
| Hamilton County Soil and Water | (317) 773-2181 |
| Hamilton County Surveyor's Office | (317) 776-8495 |

B14 - MONITORING AND MAINTENANCE GUIDELINES FOR EACH PROPOSED STORMWATER QUALITY MEASURE

Inspection Schedule/Reporting

All impacted areas, as well as all erosion and sediment control devices, will be inspected every seven (7) calendar days and within 24 hours after a rainfall of 0.5 inch or greater. Where sites have been final or temporarily stabilized or on sites where runoff is unlikely due to winter conditions (e.g., site is covered with snow, ice, or frozen ground exists), such inspections shall be conducted at least once every month.

Inspections shall be conducted and a written report prepared, by a designated and qualified person familiar with the USEPA NPDES Storm Water General Permit, and the Project.

Inspection reports shall be completed including scope of the inspection, name(s) and qualifications of personnel making the inspection, the date of the inspection, observations relating to the implementation of the SWPPP, and any actions taken as a result of incidents of noncompliance noted during the inspections. The inspection report should state whether the site was in compliance or identify any incidents of noncompliance. The contractor shall keep a copy of the inspection reports on site and permanently for a period of two years following construction. The on-site reports may be requested by inspections conducted by the local MS-4.

Construction Entrance

Locations where vehicles exit the site shall be inspected for evidence of off-site sediment tracking. Each contractor and subcontractor shall be responsible for maintaining the Construction Entrance and other controls.

Material Storage Inspections

Inspectors must evaluate areas used for storage of materials that are exposed to precipitation. The purpose is to ensure that materials are protected and/or impounded so that pollutants cannot discharge from storage areas. Off-site material storage areas used solely by the subject project are considered to be part of the project and must be included in the erosion control plans and the site inspection reports.

Soil Stabilization Inspections

Seeded areas will be inspected to confirm that a healthy stand of vegetation is maintained. The site has achieved final stabilization once all areas are covered with pavement or have a stand of vegetation with at least 70% of the background vegetation density. The density of 70% or greater must be maintained to be considered as stabilized. The operator or their representative will water, fertilize, and reseed disturbed areas as needed to achieve this goal.

Erosion and Sediment Control Inspections

All controls should be inspected at least once every seven (7) calendar days and following any storm event of 0.5 inch or greater. The following is a list of inspection/maintenance practices that will be used for specific controls:

1. Geotextiles/Erosion Control Mats: Missing or loose matting must be replaced or re-anchored.

2. Inlet Protection: Sediment should be removed when it reaches approximately one-half the height of the fence. If a sump is used, sediment should be removed when the volume of the basin is reduced by 50%.

3. Mulching: Inspected for thin or bare spots caused by natural decomposition or weather-related events. Mulch in high traffic area should be replaced on a regular basis to maintain uniform protection.

4. Silt Fence: Removal of built-up sediment will occur when the sediment reaches one-third the height of the fence.

5. Stabilized Construction Entrance: Periodic regarding and top dressing with additional stones.

6. Vegetation: Protect newly seeded areas from excessive runoff and traffic until vegetation is established. Establish a watering and fertilizing schedule.

7. Good Housekeeping: Litter, construction debris, and construction chemicals exposed to stormwater shall be prevented from becoming a pollutant source for stormwater discharges through screening of outfalls and daily pickup of litter.

In the event that sediment escapes the construction site, off-site accumulations of sediment must be removed at a frequency sufficient to minimize adverse impacts. An example of this may be the situation where sediment has washed into the street and could be carried into the storm sewers by the next rainfall and/or pose a safety hazard to users of public streets.

Material Handling and Spill Prevention

Discharge of hazardous substances or oil into stormwater is subject to reporting requirements. In the event of a spill of a hazardous substance, the operator is required to notify the National Response Center (1-800-424-8802) to properly report the spill. In addition, the operator shall submit a written description of the release (including the type and amount of material released, the date of the release, the circumstances of the release, and the steps to be taken to prevent future spills) to the local MS-4.

B15 - EROSION AND SEDIMENT CONTROL SPECIFICATIONS FOR INDIVIDUAL BUILDING LOTS
None

C1 - DESCRIPTION OF POLLUTANTS AND THEIR SOURCES ASSOCIATED WITH THE PROPOSED LAND USE
The proposed land use will consist of single family residential houses. The pollutants and sources of each pollutant normally expected from these types of land uses are listed below:

Pollutant Source: Passenger vehicles, delivery vehicles, and trucks
Type of Pollutant: Oil, gasoline, diesel fuel, any hydrocarbon associated with vehicular fuels and lubricants, grease, antifreeze, windshied cleaner solution, brake fluid, brake dust, rubber, glass, metal and plastic fragments, grit, road de-icing materials

Pollutant Source: Residence
Type of Pollutant: Cleaning solutions or solvents, leaks from HVAC equipment, grit from roof drainage, aggregate or rubber fragments from roofing system

Pollutant Source: Trash dumpster
Type of Pollutant: Cleaning solutions or solvents, litter (paper, plastic, general refuse associated with distributions operations), uneaten food products, bacteria

Pollutant Source: Roadway
Type of Pollutant: Any pollutant associated with vehicular sources, grit from asphalt wearing surface, bituminous compounds from periodic maintenance (sealing, resurfacing and patching), pavement de-icing materials, concrete fragments, wind-blown litter from off-site sources, and elevated water temperatures from contact with impervious surfaces.

Pollutant Source: Lawn and landscape areas
Type of Pollutant: Fertilizers, soil, organic material (leaves, mulch, grass clippings)

The anticipated pollution sources are the vehicles that will use these future facilities, including both truck and passenger vehicle traffic. Possible pollutants include oil, gasoline, anti-freeze and other pollutants associated with vehicular traffic.

C2 - SEQUENCE DESCRIBING STORMWATER QUALITY MEASURE IMPLEMENTATION:
Permanent seeding shall be planted as soon as finish grade is achieved. Stormwater quality measurers shall be installed as part of the storm sewer system.

C3 - DESCRIPTION OF PROPOSED POST CONSTRUCTION STORMWATER QUALITY MEASURES:

1. Swales - The proposed grassed swales will collect storm water from sheet flow areas and convey them to the storm sewer. The design of the swales will allow sediment to be partially infiltrated before storm water enters the designed storm sewer system.

2. Inlets - The proposed inlets will prevent large debris such as paper, trash and construction material from entering the storm sewer. The inlet castings are also stamped with an environmental protection stamp informing the public not to pollute the environment.

C4-LOCATION, DIMENSIONS, SPECIFICATIONS AND SONSTRUCTION DETAILS FOR EACH STORMWATER QUALITY MEASUERES:

1. Vegetated swales:
   a. The design of the vegetated swales can be found on Sheets C206-C211. The specifications for the vegetated swales can be found on Sheet C801 of the Details. The proposed seed mixture and installation specifications can be found on Sheet C304.

2. Inlets and inlet castings:
   a. The specifications for the storm inlet castings can be found on Sheet C801.

C5 - DESCRIPTION OF MAINTENANCE GUIDELINES FOR POST-CONSTRUCTION STORMWATER QUALITY MEASURES

Maintenance requirements for the post-construction stormwater quality measures are described in the attached O&M Manual.

LANDSCAPING
Landscaping shall be fertilized at the time of installation with pellets buried near the root ball. Subsequent tree fertilizations shall not be surface applied. Tree spikes or similar measure shall be used. For the first two years after installation, the landscaping shall be watered the equivalent of 1" of rainfall once per week if adequate rainfall was not received. After two years, water is necessary in dry season.

Lawn shall be mowed at a height of not less than 3" to increase root mass. Lawn shall not be fertilized more than twice per year and shall be immediately watered into the soil after application.

| DATE | MARK | REVISIONS | BY |
|---|---|---|---|

DAVID J. STOEPPELWERTH
REGISTERED
No. 19358
STATE OF INDIANA
PROFESSIONAL ENGINEER

THIS DRAWING IS NOT INTENDED TO BE REPRESENTED AS A RETRACEMENT OR ORIGINAL BOUNDARY SURVEY, A ROUTE SURVEY, OR A SUBDIVISION LOCATION REPORT.

CERTIFIED: 2/1/12


STOEPPELWERTH & ASSOCIATES
ALWAYS ON
7965 East 106th Street, Fishers, IN 46038-2505
phone: 317.849.5935 fax: 317.849.5942


STORM WATER
POLLUTION & PREVENTION SPECS
BRIDGEWATER APARTMENTS
HAMILTON COUNTY, INDIANA
WESTFIELD

DRAWN BY: KRG
CHECKED BY: BKR
SHEET NO. C304
S & A JOB NO. 56030JUSL1

S:\56030JUS-L1\DWG\C304-STORM WATER & POLL SPEC.dwg, 1/30/2013 9:49:30 AM, KGilson, 1:1

# THIS SHEET TO BE USED FOR EROSION CONTROL ONLY.

GENERAL NOTES

1. PREPARE SOIL BEFORE INSTALLING BLANKETS, INCLUDING APPLICATION OF LIME, FERTILIZER AND SEED.
2. BEGIN AT THE TOP OF THE CHANNEL BY ANCHORING THE BLANKET IN A 6" DEEP x 6" WIDE TRENCH. BACKFILL AND COMPACT THE TRENCH AFTER STAPLING.
3. ROLL CENTER BLANKET IN DIRECTION OF WATER FLOW ON BOTTOM OF CHANNEL.
4. PLACE BLANKETS END OVER END (SHINGLE STYLE) WITH A 6" OVERLAP. USE A DOUBLE ROW OF STAGGERED STAPLES 4" APART TO SECURE BLANKETS.
5. FULL LENGTH EDGE OF BLANKETS AT TOP OF SIDE SLOPES MUST BE ANCHORED IN 6" DEEP x 6" WIDE TRENCH. BACKFILL AND COMPACT THE TRENCH AFTER STAPLING.
6. BLANKETS ON SIDE SLOPES MUST BE OVERLAPPED 4" OVER THE CENTER BLANKET AND STAPLED.
7. IN MEDIUM/HIGH FLOW CHANNEL APPLICATIONS, A STAPLE CHECK SLOT IS RECOMMENDED AT 30 TO 40 FOOT INTERVALS. USE A ROW OF STAPLES 4" APART OVER ENTIRE WIDTH OF THE CHANNEL. PLACE A SECOND ROW 4" BELOW THE FIRST ROW IN A STAGGERED PATTERN.
8. THE TERMINAL END OF THE BLANKETS MUST BE ANCHORED IN A 6" DEEP x 6" WIDE TRENCH. BACKFILL AND COMPACT THE TRENCH AFTER STAPLING.

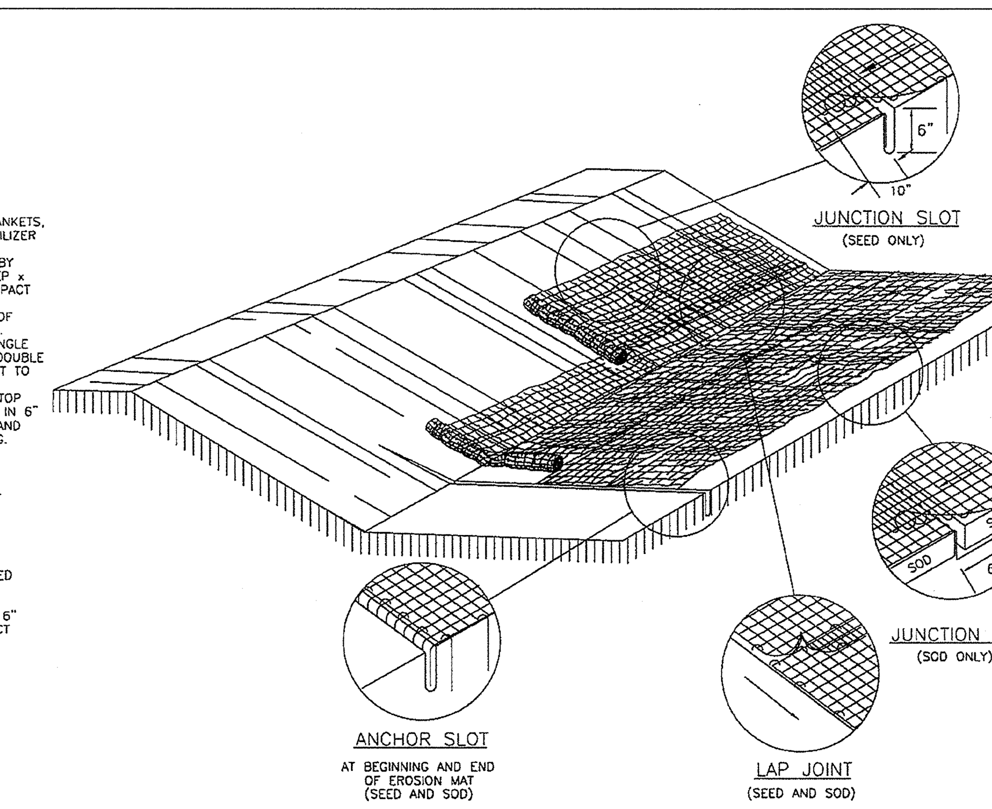


EROSION CONTROL MAT – SLOPE DETAIL

TOWN OF WESTFIELD, INDIANA

RENEE LYNN GOFF REGISTERED No. 10403860 STATE OF INDIANA PROFESSIONAL ENGINEER

Renée Lynn Goff 4/10/06 DATE

FIGURE EC-2

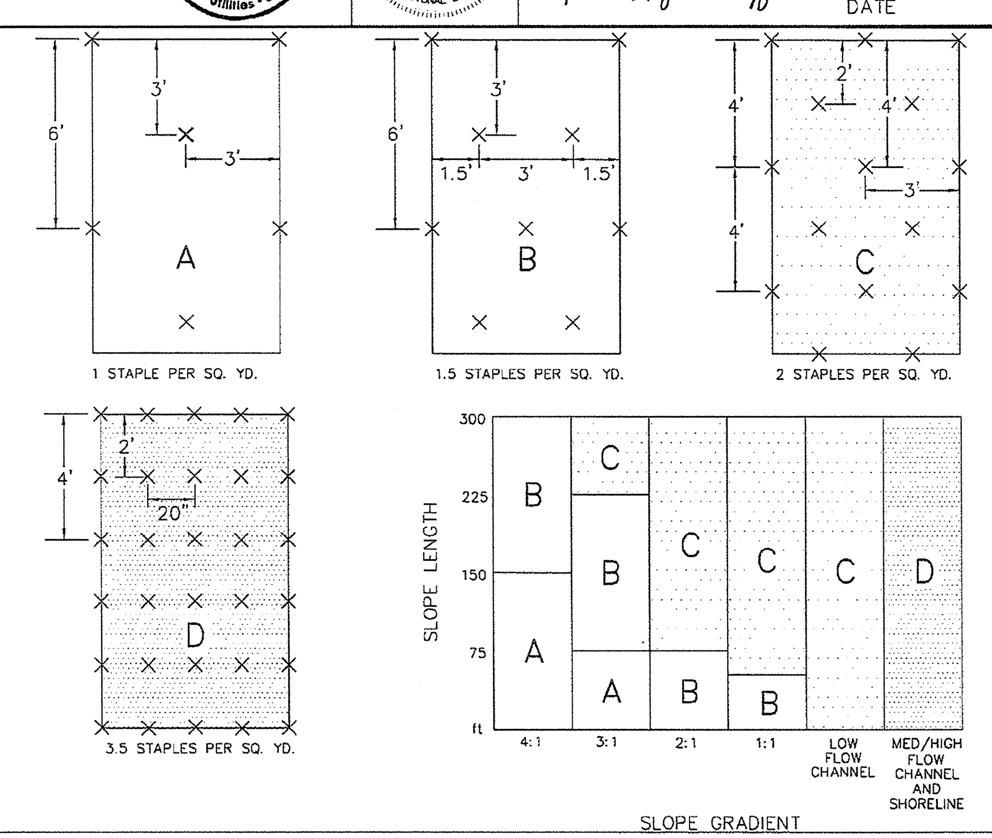


EROSION CONTROL MAT – STAPLE GUIDE

TOWN OF WESTFIELD, INDIANA

RENEE LYNN GOFF REGISTERED No. 10403860 STATE OF INDIANA PROFESSIONAL ENGINEER

Renée Lynn Goff 4/10/06 DATE

FIGURE EC-3

FLEXSTORM INLET FILTERS PRODUCT SELECTION AND SPECIFICATION DRAWING

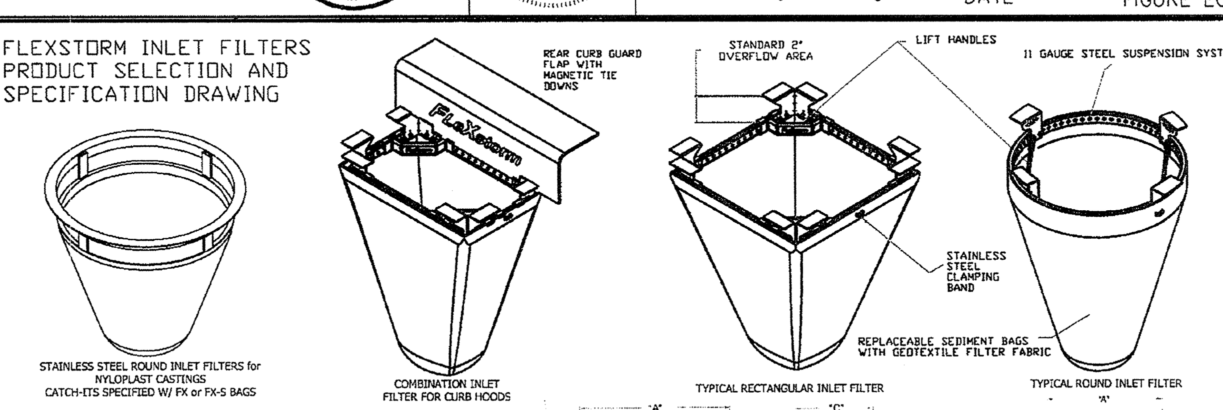


1. INDENTIFY YOUR FRAME STYLE, SIZE, AND MATERIAL

| STYLE | FRAME STYLE AND SIZE | Frame P/N: |
|---|---|---|
| ROUND | Small Round (up to 20.0" dia grates (A) dim) | 62SRD |
| | Med Round (20.1" - 26.0" dia grates (A) up to 25" dia openings (B)) | 62MRD |
| | Large Round (26.1" - 32.0" dia grates (A) up to 30" openings (B)) | 62LRD |
| | XL Round (32.1" dia - 39" dia grates (A) up to 37" dia openings (B)) | 62XLRD |
| RECT/ SQUARE | Small Rect / Square (up to 16" (B) x 16" (D) openings or 64" perimeter) | 62SSQ |
| | Med Rect / Square (up to 24" (B) x 24" (D) openings or 96" perimeter) | 62MSQ |
| | Large Rect / Square (up to 36" (B) x 24" (D) openings or 120" perimeter) | 62LSQ |
| | XL Rect / Square (side by side 2 pc set to fit up to 48" (B) x 36" (D) openings) | 62XLSQ |
| COMBO INLETS | Small Rect / Square (ref Rect sizing; shipped with Magnetic Curb Flaps) | 62SCB |
| | Med Rect / Square (ref Rect sizing; shipped with Magnetic Curb Flaps) | 62MCB |
| | Large Rect / Square (ref Rect sizing; shipped with Magnetic Curb Flaps) | 62LCB |
| | XL Rect / Square (ref Rect sizing; shipped with Magnetic Curb Flaps) | 62XLCB |
| NYLOPLAST | 12" diameter Nyloplast castings (Stainless Steel Framing standard) | 6212NY |
| | 15" diameter Nyloplast castings (Stainless Steel Framing standard) | 6215NY |
| | 18" diameter Nyloplast castings (Stainless Steel Framing standard) | 6218NY |
| | 24" diameter Nyloplast castings (Stainless Steel Framing standard) | 6224NY |
| | 30" diameter Nyloplast castings (Stainless Steel Framing standard) | 6230NY |
| WALL MOUNT | Open Throat Gutters - Curb Opening Size | |
| | Up to 4' (1 Filter and Mounting Hardware) | 62WM1 |
| | Between 4' and 8' (2 Filters and Mounting Hardware) | 62WM2 |
| | Between 8' and 12' (3 Filters and Mounting Hardware) | 62WM3 |
| | Between 12' and 16' (4 Filters and Mounting Hardware) | 62WM4 |
| | UPGRADED FRAMING MATERIAL OPTIONS (STANDARD IS ZINC PLATED) | SUFFIX |
| | CHROME PLATED FRAMING FOR HIGH SALT EXPOSURE | - CHR |
| | STAINLESS STEEL FRAMING FOR HIGH SALT AND/OR CHEMICAL EXPOSURE | - SS |

2. SELECT YOUR FILTER BAG PART NUMBER

| FLEXSTORM FILTER BAGS | (22" depth) STD Bag P/N | (12" depth) Short Bag P/N | Clean Water Flow Rate (GPM/SqFt) | Min A.O.S. (US Sieve) |
|---|---|---|---|---|
| FX: Standard Woven Bag | FX | FX-S | 200 | 40 |
| FX+: Woven w/ MyCelx | FXP | FXP-S | 200 | 40 |
| FXO: Woven w/ Oil Boom | FXO | FXO-S | 200 | 40 |
| PC: Post Construction Bag | PC | PC-S | 137 | 140 |
| PC+: PC Bag w/ MyCelx | PCP | PCP-S | 137 | 140 |
| LL: Litter and Leaf Bag | LL | LL-S | High | 3.5 |
| IL: IDOT Non-Woven Bag | IL | IL-S | 145 | 70 |

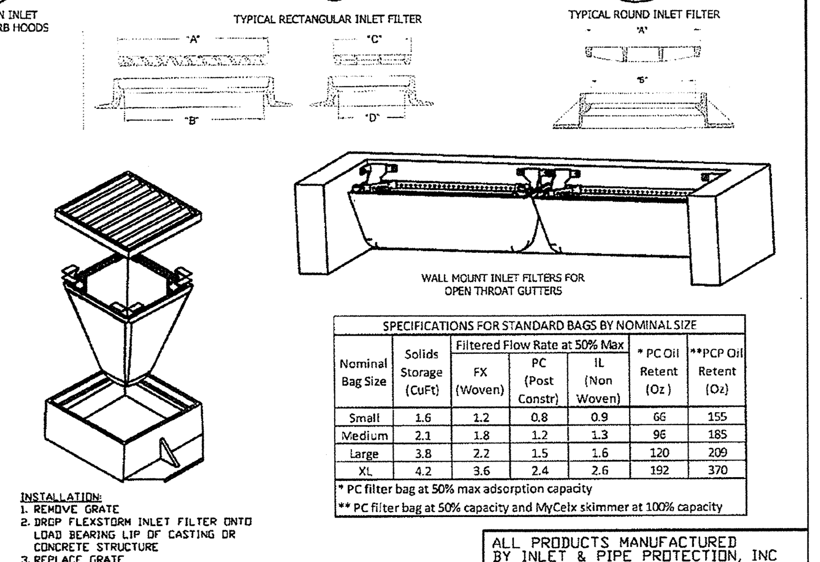


INSTALLATION:
1. REMOVE GRATE
2. DROP FLEXSTORM INLET FILTER ONTO LOAD BEARING LIP OF CASTING OR CONCRETE STRUCTURE
3. REPLACE GRATE

SPECIFICATIONS FOR STANDARD BAGS BY NOMINAL SIZE

| Nominal Bag Size | Solids Storage (CuFt) | Filtered Flow Rate at 50% Max: FX (Woven) | PC (Post Constr) | IL (Non Woven) | * PC Oil Retent (Oz) | **PCP Oil Retent (Oz) |
|---|---|---|---|---|---|---|
| Small | 1.6 | 1.2 | 0.8 | 0.9 | 66 | 155 |
| Medium | 2.1 | 1.8 | 1.2 | 1.3 | 96 | 185 |
| Large | 3.8 | 2.2 | 1.5 | 1.6 | 120 | 209 |
| XL | 4.2 | 3.6 | 2.4 | 2.6 | 192 | 370 |

* PC filter bag at 50% max adsorption capacity
** PC filter bag at 50% capacity and MyCelx skimmer at 100% capacity

3. CREATE YOUR FLEXSTORM INLET FILTER PART NUMBER

Frame P/N from Step 1. | Filter Bag P/N from Step 2. | - | Framing Material

ALL PRODUCTS MANUFACTURED BY INLET & PIPE PROTECTION, INC
DISTRIBUTED BY ADS
WWW.INLETFILTERS.COM
(866) 287-8655 PH
(630) 355-3477 FX
INFO@INLETFILTERS.COM

SIZE C | DWG NO FLEXSTORM_SPECS | REV | SCALE | SHEET 1 OF 1

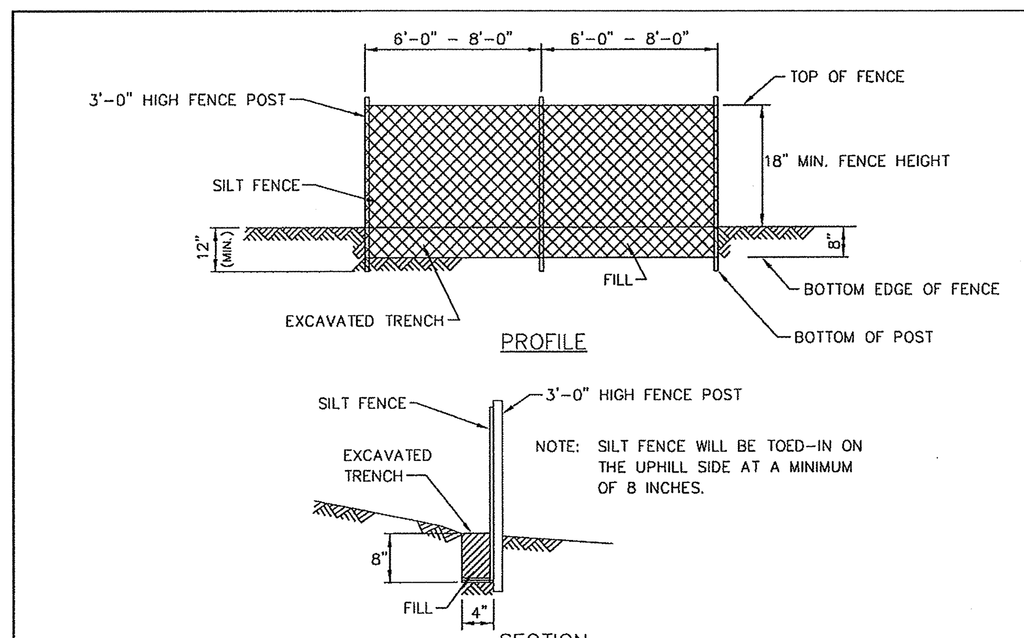


INSTALLATION PROCEDURE

1. 2" x 2" X 36" HARDWOOD OR STEEL FENCE POSTS ARE INSTALLED 6' APART (w/ EXTRA STRENGTH FABRIC WITHOUT WIRE BACKING) OR 8' APART (w/ WIRE BACKING), ON A SLIGHT ANGLE TOWARD THE ANTICIPATED RUNOFF SOURCE.
2. A TRENCH 4" WIDE BY 8" DEEP IS DUG ALONG THE UPHILL SIDE OF THE FENCE LINE.
3. THE SILT FENCE IS UNROLLED AND LAID OUT ALONG THE FENCE LINE.
4. A BUILT-IN ATTACHMENT CORD RUNS THROUGHOUT THE FULL LENGTH OF EACH 150 LINEAR FOOT ROLL. ONE END OF THE ROLL HAS APPROXIMATELY 5' OF CORD. THE OTHER END HAS APPROXIMATELY 20' OF CORD. THE END WITH 5' OF CORD IS WRAPPED AROUND THE FIRST POST AND SECURED.
5. THE FENCE IS PULLED TO THE NEXT POST AND A 1.5" SLIT IS MADE IN THE HEM DIRECTLY ABOVE THE CORD. THE CORD IS PULLED OUT OF THE HEM AND PULLED TAUT FROM THE PRECEDING POST AND WRAPPED TWICE AROUND THE POST.
6. THE SLITTING OF THE HEM ON EACH POST IS REPEATED UNTIL THE FINAL POST IS REACHED, AT WHICH TIME THE MATERIAL IS WRAPPED AROUND THE LAST POST AND SECURED WITH THE ENCLOSED CORD.
7. AT THIS TIME THE LOWER 8" OF THE FENCE IS LAID IN THE TRENCH AND CURLED TOWARD THE EROSION SOURCE. THE TRENCH IS THEN BACKFILLED WITH SOIL.

SILT FENCE DETAIL

TOWN OF WESTFIELD, INDIANA

RENEE LYNN GOFF REGISTERED No. 10403860 STATE OF INDIANA PROFESSIONAL ENGINEER

Renée Lynn Goff 4/10/06 DATE

FIGURE EC-4

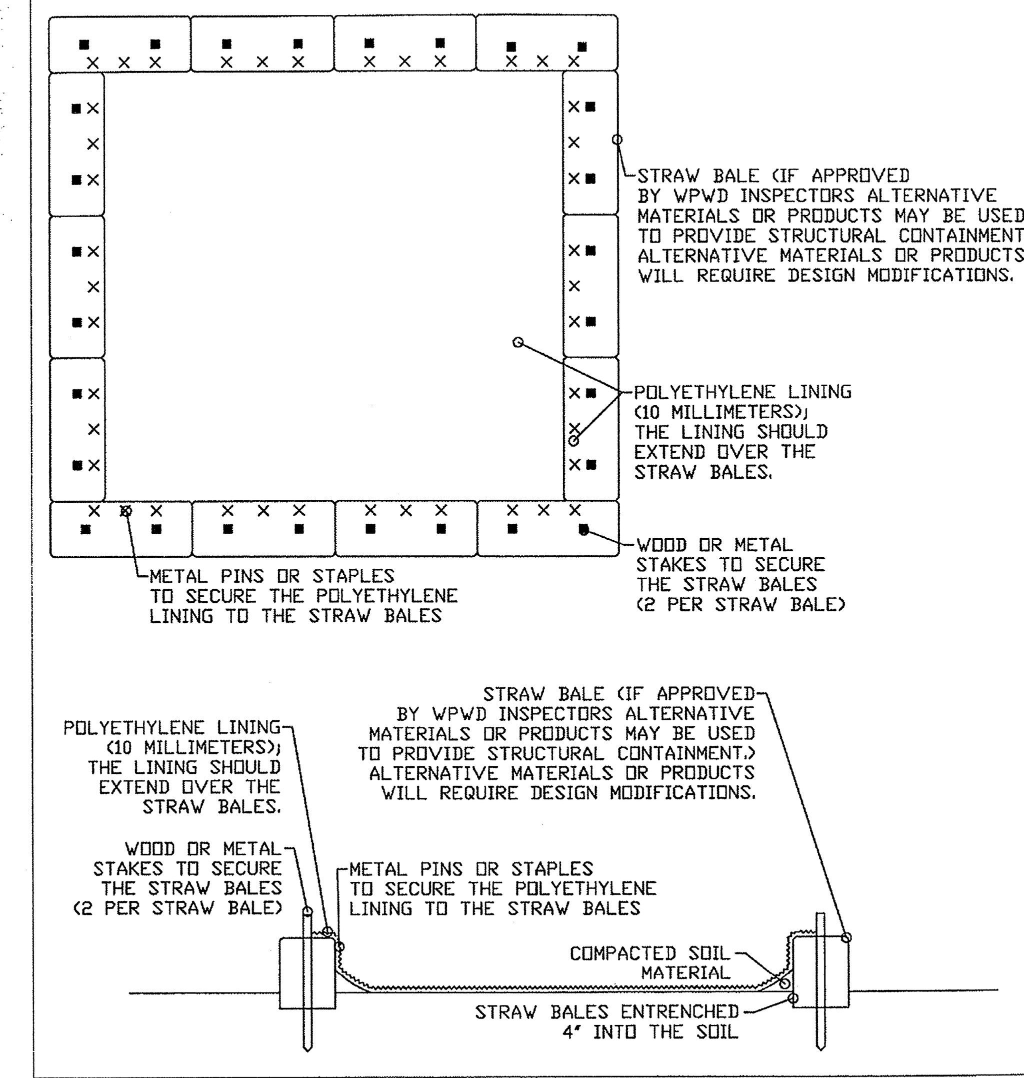


CONCRETE WASHOUT DETAIL

CITY OF WESTFIELD, INDIANA

NEIL B. VANTREES REGISTERED No. 10809092 STATE OF INDIANA PROFESSIONAL ENGINEER

Neil B. VanTrees 7/15/08 DATE

FIGURE EC-5

SEASONAL SOIL PROTECTION CHART

| STABILIZATION PRACTICE | JAN. FEB. MAR. APR. MAY JUN. JUL. AUG. SEPT. OCT. NOV. DEC. |
|---|---|
| PERMANENT SEEDING | A———*//////////* *///> |
| DORMANT SEEDING | B———> B———> |
| SEEDING | E———*///////* > |
| SODDING | F**———*////////////* > |
| MULCHING | G———> |

Seedbed Preparation for Permanent Seeding

1. Test soil to determine pH and nutrient levels. (Contact you county SWCD or Cooperative Extension office for assistance and soils information, including available testing services.)

2. If soil pH is unsuitable for the species to be seeded, apply lime according to test recommendations.

3. Fertilize as recommended by the soil test. If testing was not done, consider applying 400–600 lbs./acre of 12–0–12 analysis, or equivalent, fertilizer. Do not use phosphorous containing fertilizer (12–12–12) unless soil tests show a phosphorous deficency.

4. Till the soil to obtain a uniform seedbed, working the fertilizer and lime into the soil 2–4 in. deep with a disk or rake operated across the slope.

A = KENTUCKY BLUE GRASS 40 lbs./AC.: CREEPING RED FESCUE 40 lbs./AC.: PLUS 2 TONS STRAW MULCH/AC. OR ADD ANNUAL RYEGRASS 20lbs>/AC.
B = KENTUCKY BLUE GRASS 60 lbs./AC.: CREEPING RED FESCUE 60 lbs./AC.: PLUS 2 TONS STRAW MULCH/AC. OR ADD ANNUAL RYEGRASS 30lbs>/AC.
C = SPRING OATS 3 BUSHEL/ACRE
D = WHEAT OR RYE 2 BUSHEL/ACRE
E = ANNUAL RYEGRASS 40 lbs./AC. (1 lb./1000 sq. ft.)
F = SOD
G = STRAW MULCH 2 TONS/ACRE–ANCHOR ALL MULCH BY CRIMPING OR TACKIFYING
*///* = IRRIGATION NEEDED DURING JUNE, JULY, AND/OR SEPT.
** = IRRIGATION NEEDED FOR 2 TO 3 WEEKS AFTER APPLYING SOD

Rule 5 requires all disturbed areas likely to be idle for 15 day shall have surface stabilization applied. When weather conditions prevent rapid germination of grass, then 2t/ac mulch will be used to ensure ground stabilization requirements are met.

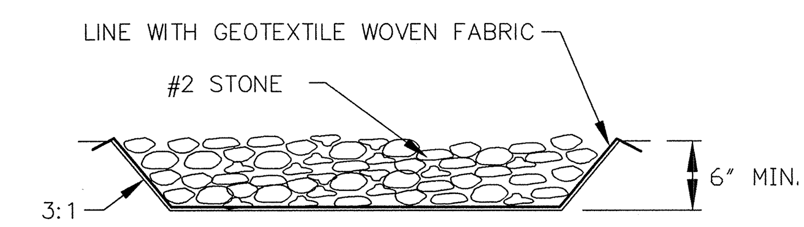


FUELING & VEHICLE MAINTENANCE AREA

SECTION "Z"–"Z"
NOT-TO-SCALE

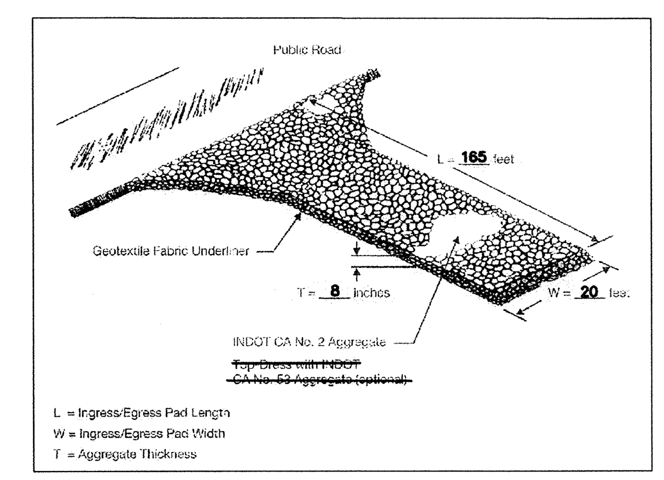


CONSTRUCTION ENTRANCE DETAIL
NOT-TO-SCALE

1. Inspect and repair as needed, and remove any accumulated sediments after every storm.

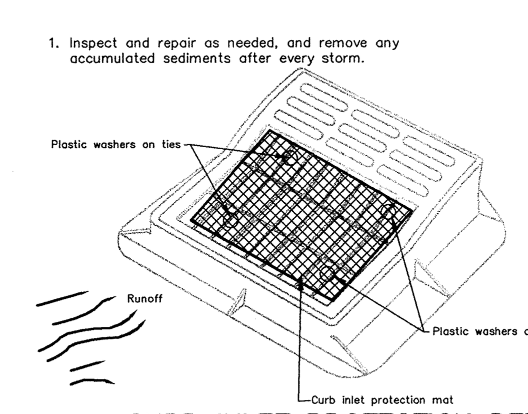


CURB INLET PROTECTION DETAIL
NOT-TO-SCALE

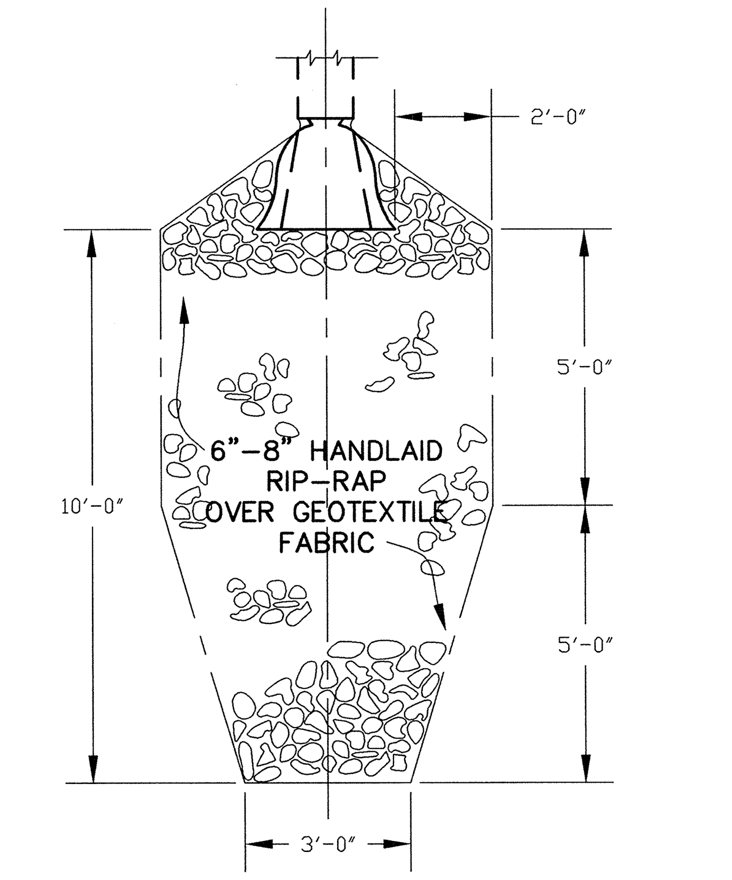


RIP-RAP DETAIL
NOT-TO-SCALE

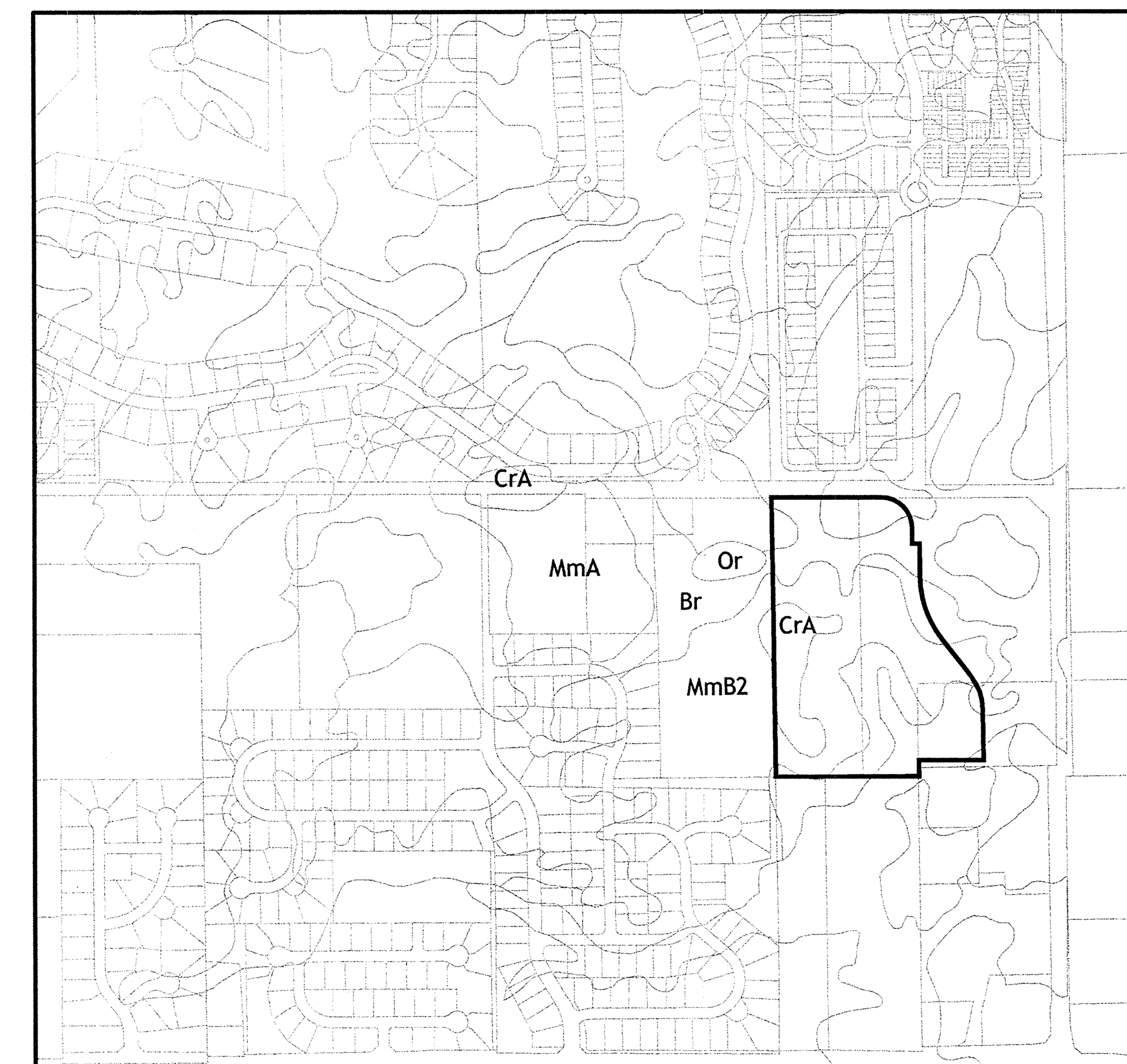


SOILS MAP
SCALE: 1" =300'

Br:-- Brookston silty clay loam- this soil is dark colored, silty in texture and on depressional uplands. It is deep and very poorly drained with moderate permeability. It has high available water for plant growth and high organic matter content. It has compact till starting at a depth of 40 to 60 inches. The main soil features that affect the urban development uses are seasonal high water table, high potential frost action, moderate shrink-swell potential, moderate permeability and ponded surface water. Because of these engineering limitations this site will be constructed as follows. Maple Village, Section Three, being a single family development within the jurisdiction of The City of Westfield and Hamilton County will have to abide by the current Subdivision Control Ordinance. This ordinance requires that we have an artificially drained site and that the buildings within this development be well above the 100yr elevation of the proposed detention basins and therefore be protected from flooding. All buildings will be of large slab type construction. In cases where a high water table is present special footings shall be constructed. All roads will have adequate sub-base. All sanitary sewers shall be public and therefore no septic systems shall be allowed Crosby silt loam, 0-3 percent slopes- this soil is light colored, silty in texture and on sloping uplands.

CrA--Crosby silt loam, 0 to 2 percent slopes
This is a somewhat poorly drained soil and has a seasonal high watertable at 0.5 to 2.0 ft. and is on rises on uplands. Slopes are 0 to 2 percent. The native vegetation is hardwoods. The surface layer is silt loam and has moderately low or moderate organic matter content (1.0 to 3.0 percent). Permeability is very slow (< 0.06 in/hr) in the most restrictive layer above 60 inches. Available water capacity is moderate (6.2 inches in the upper 60 inches).The pH of the surface layer in non-limed areas is 5.1 to 6.0. Droughtiness and wetness are management concerns for crop production. This soil responds well to tile drainage.

MmA--Miami silt loam, 0 to 2 percent slopes, gravelly substratum
This well drained soil has a watertable at a depth greater than 40 inches and is on uplands. Slopes are 0 to 2 percent. The native vegetation is hardwoods. The surface layer is silt loam and has moderately low organic matter content (1.0 to 3.0 percent). Permeability is moderately slow (0.2 to 0.6 in/hr) in the most restrictive layer above 60 inches. Available water capacity is moderate (7.7 inches in the upper 60 inches).The pH of the surface layer in non-limed areas is 5.1 to 6.0. Droughtiness is a management concern for crop production.

MmB2--Miami silt loam, 2 to 6 percent slopes, eroded
This moderately well drained soil has a seasonal high watertable at 2.0 to 3.5 ft. and is on sideslopes and rises on uplands. Slopes are 2 to 6 percent. The native vegetation is hardwoods. The surface layer is silt loam and has moderately low organic matter content (1.0 to 2.0 percent). Permeability is very slow (< 0.06 in/hr) in the most restrictive layer above 60 inches. Available water capacity is low (5.9 inches in the upper 60 inches). The pH of the surface layer in non-limed areas is 5.1 to 6.0. Droughtiness and water erosion are management concerns for crop production.

Pn--Patton silty clay loam, 0 to 2 percent slopes
This is a deep poorly drained soil and has a seasonal high watertable at 0.5 to 2.0 ft. and is in broad depressions and drainageways on lake plains and terraces. Slopes are 0 to 2 percent. The native vegetation is grasses. The surface layer is silt loam and has moderately low or moderate organic matter content (1.0 to 3.0 percent). Permeability is very slow (< 0.06 in/hr) in the most restrictive layer above 60 inches. Available water capacity is moderate (6.2 inches in the upper 60 inches).The pH of the surface layer in non-limed areas is 5.1 to 6.0. Droughtiness and wetness are management concerns for crop production. This soil responds well to tile drainage.

EROSION CONTROL NOTES

| EROSION CONTROL MEASURE | INSTALLATION SEQUENCE | MAINTENANCE |
|---|---|---|
| STONE ENTRANCE | PRIOR TO CLEANING AND GRADING | INSPECT ENTRANCE PAD AND SEDIMENT DISPOSAL AREA WEEKLY AND AFTER STORM EVENTS OR HEAVY USE. RESHAPE PAD AS NEEDED FOR DRAINAGE AND RUNOFF CONTROL. TOPDRESS WITH CLEAN STONE AS NEEDED. IMMEDIATELY REMOVE MUD AND SEDIMENT TRACKED OR WASHED ONTO PUBLIC ROADS BY BRUSHING OR SWEEPING. FLUSHING SHOULD ONLY BE USED IF THE WATER IS CONVEYED INTO A SEDIMENT TRAP OR BASIN. REPAIR ANY BROKEN ROAD PAVEMENT IMMEDIATELY. |
| SILT FENCE | PRIOR TO CLEANING AND GRADING | INSPECT THE SILT FENCE PERIODICALLY AND AFTER EACH STORM EVENT. IF FENCE FABRIC TEARS, STARTS TO DECOMPOSE, OR IN ANY WAY BECOMES INEFFECTIVE, REPLACE THE AFFECTED PORTION IMMEDIATELY. REMOVE DEPOSITED SEDIMENT WHEN IT REACHES HALF THE HEIGHT OF THE FENCE AT ITS LOWEST POINT OR IS CAUSING THE FABRIC TO BULGE. TAKE CARE TO AVOID UNDERMINING THE FENCE DURING CLEANOUT. AFTER THE CONTRIBUTING DRAINAGE AREA HAS BEEN STABILIZED, REMOVE THE FENCE AND SEDIMENT DEPOSITS, BRING THE DISTURBED AREA TO GRADE, AND STABILIZE. |
| TOPSOIL STOCKPILE | PRIOR TO CLEANING AND GRADING | DETERMINE DEPTH AND SUITABILITY OF TOPSOIL AT THE SITE. (FOR HELP, CONTACT YOUR LOCAL SWCD OFFICE TO OBTAIN A COUNTY SOIL SURVEY REPORT OR CONSULT WITH A SOIL SCIENTIST.) PRIOR TO STRIPPING TOPSOIL, INSTALL ANY SITE-SPECIFIC DOWNSLOPE PRACTICES NEEDED TO CONTROL RUNOFF AND SEDIMENTATION. REMOVE THE SOIL MATERIAL NO DEEPER THAN WHAT THE COUNTY SOIL SURVEY DESCRIBES AS "SURFACE SOIL" (I.E., A OR AP HORIZON). STOCKPILE THE MATERIAL IN ACCESSIBLE LOCATIONS THAT NEITHER INTERFERE WITH OTHER CONSTRUCTION ACTIVITIES NOR BLOCK NATURAL DRAINAGE; AND INSTALL SILT FENCES OR OTHER BARRIERS TO TRAP SEDIMENT (SEE EXHIBIT 3.02-B). (SEVERAL SMALL PILES AROUND THE CONSTRUCTION SITE ARE USUALLY MORE EFFICIENT AND EASIER TO CONTAIN THAN ONE LARGE PILE.) IF SOIL IS STOCKPILED FOR MORE THAN 6 MO., IT SHOULD BE TEMPORARILY SEEDED OR COVERED WITH A TARP OR SURROUNDED BY A SEDIMENT BARRIER. |
| TEMPORARY DIVERSIONS | AFTER ROUGH GRADING | INSPECT WEEKLY AND FOLLOWING EACH STORM EVENT. REMOVE SEDIMENT FROM THE CHANNEL AND REINFORCE THE RIDGE AS NEEDED. CHECK THE OUTLETS AND MAKE NECESSARY REPAIRS IMMEDIATELY. REMOVE SEDIMENT FROM TRAPS WHEN THEY ARE 50% FULL. WHEN THE WORK AREA HAS BEEN STABILIZED, REMOVE THE RIDGE, FILL THE CHANNEL TO BLEND WITH THE NATURAL GROUND, REMOVE TEMPORARY SLOPE DRAINS, AND STABILIZE ALL DISTURBED AREAS. |
| ROCK DAM | AFTER ROUGH GRADING | INSPECT THE ROCK DAM AND BASIN FOLLOWING EACH STORM EVENT. REMOVE SEDIMENT WHEN IT ACCUMULATES TO HALF THE DESIGN VOLUME (MARKED BY STAKE) CHECK THE DAM AND ABUTMENTS FOR EROSION, PIPING, AND ROCK DISPLACEMENT, AND REPAIR IMMEDIATELY IF THE BASIN DOES NOT DRAIN BETWEEN STORMS, REPLACE THE STONE ON THE UPSTREAM FACE OF DAM IF THE BASIN DRAINS TO RAPIDLY FOLLOWING A STORM,(LESS THAN 6 HRS.), ADD INDOT CA NO. 5 GRAVEL ON THE UPSTREAM FACE OF THE DAM. ONCE THE CONTRIBUTING DRAINAGE AREA HAS BEEN PERMANENTLY STABILIZED, a. REMOVE WATER AND SEDIMENT FROM THE BASIN. b. REMOVE THE DAM, DISPOSING OF THE ROCK IN DESIGNATED DISPOSAL AREAS. c. SMOOTH THE SITE TO BLEND THE SURROUNDING AREA. d. STABILIZE |
| TEMPORARY SEEDING | AFTER ROUGH GRADING | INSPECT PERIODICALLY AFTER PLANTING TO SEE THAT VEGETATIVE STANDS ARE ADEQUATELY ESTABLISHED; RE-SEED IF NECESSARY. CHECK FOR EROSION DAMAGE AFTER STORM EVENTS AND REPAIR; RESEED AND MULCH IF NECESSARY. TOPDRESS FALL SEEDED WHEAT OR RYE SEEDINGS WITH 50 LBS./ACRE OF NITROGEN IN FEBRUARY OR MARCH IF NITROGEN DEFICIENCY IS APPARENT. (EXHIBIT 3.11-B SHOWS ONLY WHEAT/RYE FALL SEEDED.) |
| PERMANENT SEEDING | AFTER FINISH GRADING | INSPECT PERIODICALLY, ESPECIALLY STORM EVENTS, UNTIL THE STAND IS SUCCESSFULLY ESTABLISHED. (CHARACTERISTICS OF A SUCCESSFUL STAND INCLUDE: VIGOROUS DARK GREEN OR BLUISH-GREEN SEEDLINGS; UNIFORM DENSITY WITH NURSE PLANTS, LEGUMES, AND GRASSES WELL INTERMIXED; GREEN LEAVES; AND THE PERENNIALS REMAINING GREEN THROUGHOUT THE SUMMER, AT LEAST AT THE PLANT BASE.) PLAN TO ADD FERTILIZER THE FOLLOWING SEASON ACCORDING TO SOIL TEST RECOMMENDATIONS. REPAIR DAMAGED, BARE, OR SPARSE OR PATCHY, BY FILLING ANY GULLIES, RE-FERTILIZING, OVER – OR RE-SEEDING AND MULCHING AFTER RE-PREPARING THE SEEDBED. IF VEGETATION FAILS TO GROW, CONSIDER SOIL TESTING TO DETERMINE ACIDITY OR NUTRIENT DEFICIENCY PROBLEMS. (CONTACT YOUR SWCD OR COOPERATIVE EXTENSION OFFICE FOR ASSISTANCE.) IF ADDITIONAL FERTILIZATION IS NEEDED TO GET A SATISFACTORY STAND, DO SO ACCORDING TO SOIL TEST RECOMMENDATIONS. |
| EROSION CONTROL MATTING | AFTER FINISH GRADING | DURING VEGETATIVE ESTABLISHMENT, INSPECT AFTER STORM EVENTS FOR ANY EROSION BELOW THE BLANKET. IF ANY AREA SHOWS EROSION, PULL BACK THAT PORTION OF THE BLANKET COVERING IT, ADD SOIL, RE-SEED THE AREA, AND RE-LAY AND STAPLE THE BLANKET. AFTER VEGETATIVE ESTABLISHMENT, CHECK THE TREATED AREA PERIODICALLY. |
| INLET PROTECTION | AFTER EACH INLET IS PLACED | INSPECT FREQUENTLY FOR DAMAGE BY VEHICULAR TRAFFIC, AND REPAIR IF NEEDED. INSPECT AFTER EACH STORM EVENT. REMOVE SEDIMENT (BUT NOT BY FLUSHING) WHEN IT REACHES HALF THE HEIGHT OF THE BARRIER. DEPOSIT REMOVED SEDIMENT WHERE IT WILL NOT ENTER STORM DRAINS. |
| REMOVAL OF INLET PROTECTION | AFTER ALL AREAS DRAINING TO THESE AREAS ARE STABILIZED | N/A |
| REMOVAL OF SILT FENCE | AFTER ALL AREAS DRAINING TO THESE AREAS ARE STABILIZED | N/A |

| REVISIONS | | |
|---|---|---|
| DATE | MARK | BY |

DAVID J. STOEPPELWERTH REGISTERED No. 19358 STATE OF INDIANA PROFESSIONAL ENGINEER

THIS DRAWING IS NOT INTENDED TO BE REPRESENTED AS A RETRACEMENT OR ORIGINAL BOUNDARY SURVEY, A ROUTE SURVEY OR A SURVEYOR LOCATION REPORT.

CERTIFIED: 2/1/12

David J. Stoeppelwerth


STOEPPELWERTH
ALWAYS ON
7965 East 106th Street, Fishers, IN 46038-2505
phone: 317.849.5935 fax: 317.849.5942


STORM WATER POLLUTION & PREVENTION DETAILS

BRIDGEWATER APARTMENTS

WESTFIELD HAMILTON COUNTY, INDIANA

DRAWN BY: KRG | CHECKED BY: BKR

SHEET NO. C305

S & A JOB NO. 56030JUSL1

S:\56030JUS-L1\DWG\C305-STORM WATER & POLL SPEC-2.dwg, 1/29/2013 1:57:19 PM, KGilson, 1:1

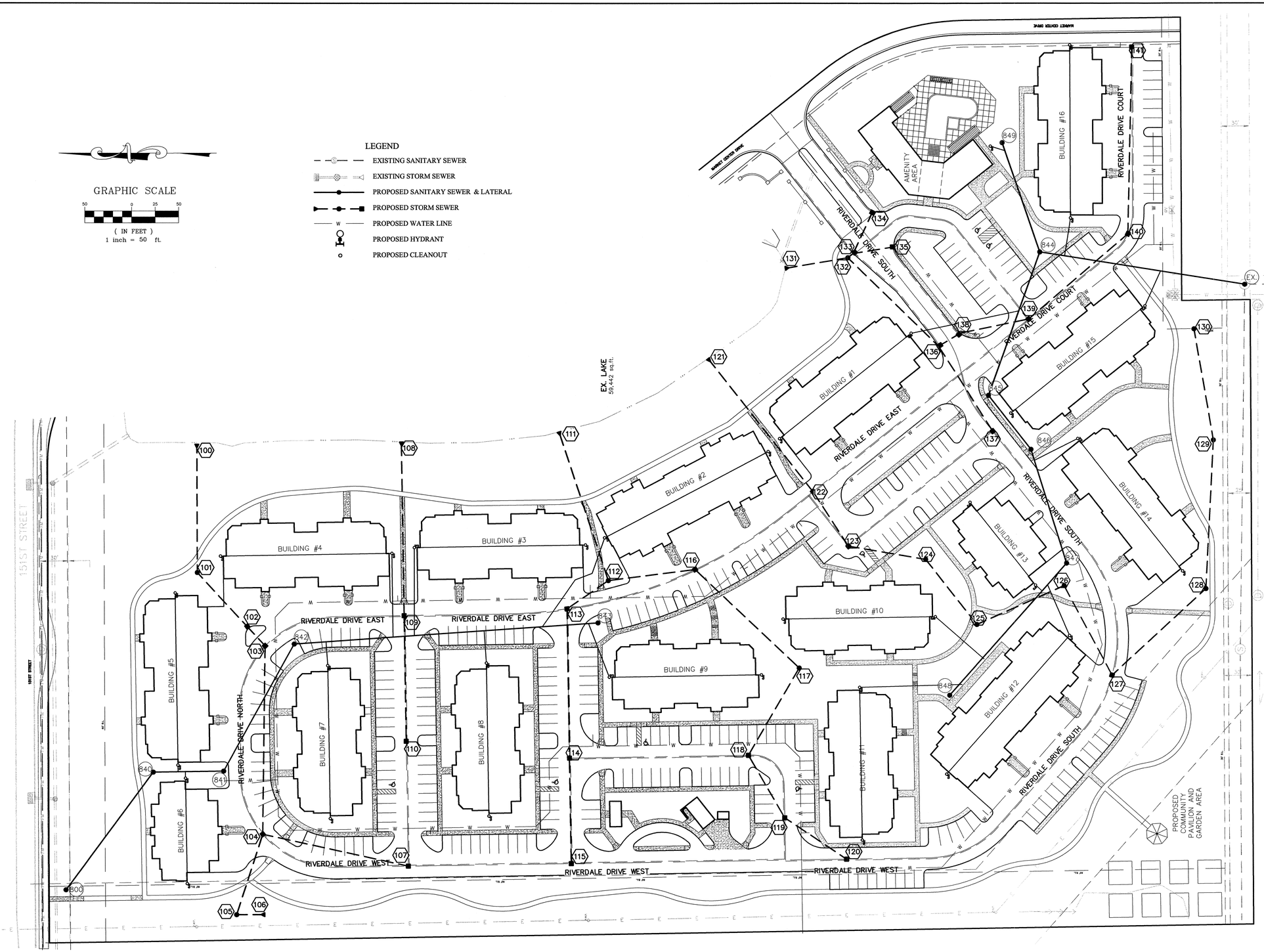


IUPPS Dig Safely.
Indiana Underground Plant Protection Service

811
Know what's below.
Call before you dig.

| DATE | MARK | REVISIONS | BY |
|---|---|---|---|

DAVID J. STOEPPELWERTH
REGISTERED
No. 19358
STATE OF INDIANA
PROFESSIONAL ENGINEER

THIS DRAWING IS NOT INTENDED TO BE REPRESENTED AS A RETRACEMENT OR ORIGINAL BOUNDARY SURVEY, A ROUTE SURVEY OR A SURVEYOR LOCATION REPORT.

CERTIFIED: 2/1/12

David J. Stoeppelwerth


STOEPPELWERTH
ALWAYS ON
7965 East 106th Street, Fishers, IN 46038-2505
phone: 317.849.5935 fax: 317.849.5942


# UTILITY PLAN
# BRIDGEWATER APARTMENTS

HAMILTON COUNTY, INDIANA
WESTFIELD

| DRAWN BY: | CHECKED BY: |
|---|---|
| KRG | BKR |

SHEET NO.
C400

S & A JOB NO.
56030JUSL1

S:\56030JUS-L1\DWG\C400-Utility Plan.dwg, 1/29/2013 1:58:53 PM, KGilson, 1:1

GRAPHIC SCALE

50 0 25 50

( IN FEET )
1 inch = 50 ft.

LEGEND

ROAD NAME SIGN - 5 (D3)

STOP SIGN - 13 (R1-1)

SPEED LIMIT SIGN - 4 (R2-1)

NOTE:
ALL SIGNAGE TO BE INSTALLED TO THE WESTFIELD PUBLIC WORKS DEPARTMENT SPECIFICATIONS.

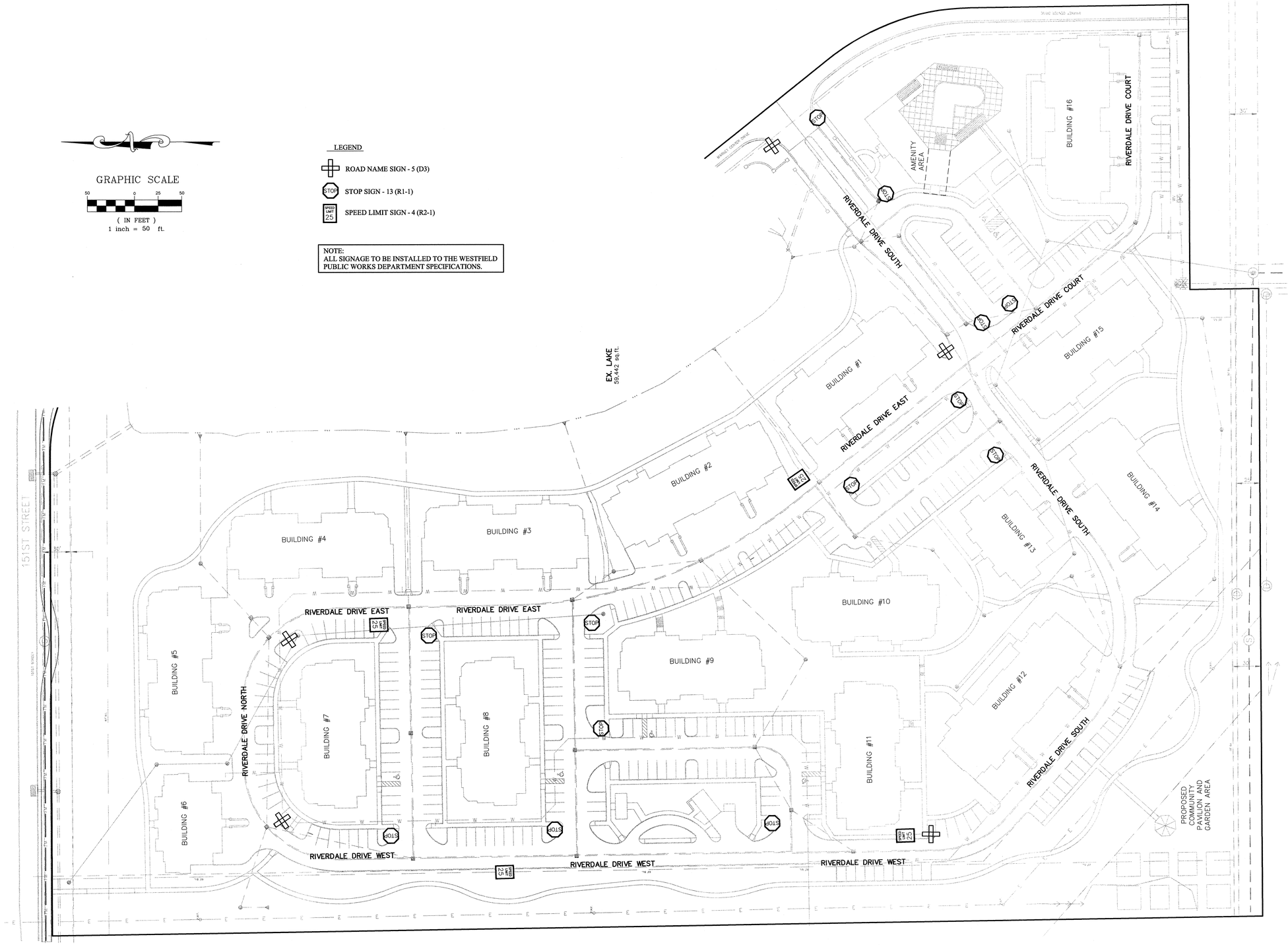


IUPPS Dig Safely.
Indiana Underground Plant Protection Service

811
Know what's below.
Call before you dig.

| DATE | MARK | REVISIONS | BY |
|---|---|---|---|

DAVID J. STOEPPELWERTH
REGISTERED
No. 19358
STATE OF INDIANA
PROFESSIONAL ENGINEER

THIS DRAWING IS NOT INTENDED TO BE REPRESENTED AS A RETRACEMENT OR ORIGINAL BOUNDARY SURVEY, A ROUTE SURVEY, OR A SURVEYOR LOCATION REPORT.

CERTIFIED: 2/1/12

David J. Stoeppelwerth


STOEPPELWERTH
ALWAYS ON
7965 East 106th Street, Fishers, IN 46038-2505
phone: 317.849.5935 fax: 317.849.5942


# TRAFFIC CONTROL PLAN
## BRIDGEWATER APARTMENTS

HAMILTON COUNTY, INDIANA

WESTFIELD

DRAWN BY: KRG
CHECKED BY: BKR
SHEET NO. C401
S & A JOB NO. 56030JUSL1

S:\56030JUS-L1\DWG\C401-Traffic Control Plan.dwg, 1/29/2013 2:03:01 PM, KGilson, 1:1

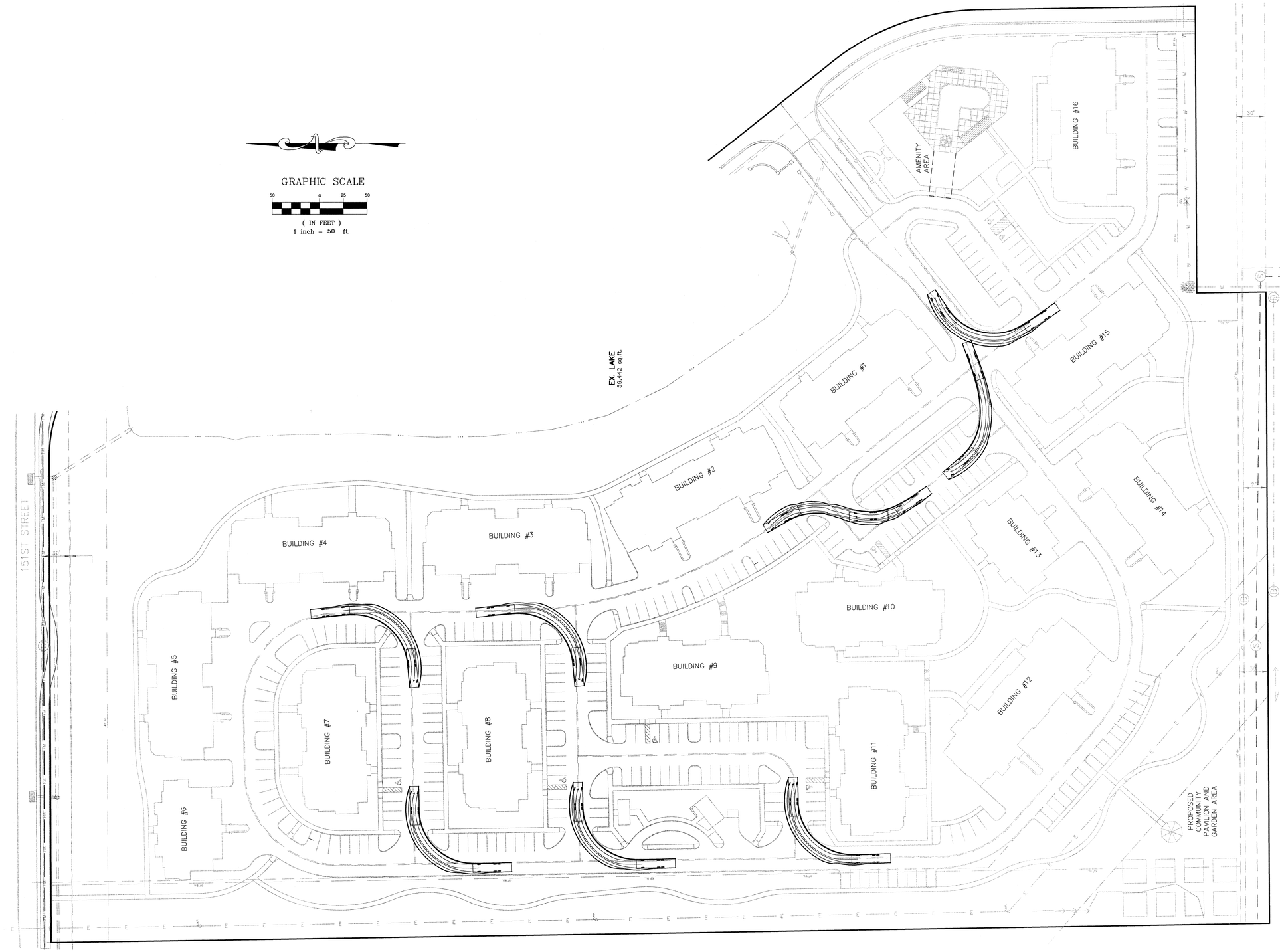


IUPPS Dig Safely.
Indiana Underground Plant Protection Service

811
Know what's **below.**
**Call** before you dig.

| DATE | MARK | REVISIONS | BY |
|---|---|---|---|

DAVID J. STOEPPELWERTH
REGISTERED
No. 19358
STATE OF INDIANA
PROFESSIONAL ENGINEER

THIS DRAWING IS NOT INTENDED TO BE REPRESENTED AS A RETRACEMENT OR ORIGINAL BOUNDARY SURVEY, A ROUTE SURVEY OR A SURVEYOR LOCATION REPORT.

CERTIFIED: 2/1/12

David J. Stoeppelwerth


STOEPPELWERTH
ALWAYS ON
7965 East 106th Street, Fishers, IN 46038-2505
phone: 317.849.5935 fax: 317.849.5942


# AUTO TURN EXHIBIT

## BRIDGEWATER APARTMENTS

HAMILTON COUNTY, INDIANA

WESTFIELD

DRAWN BY: KRG
CHECKED BY: BKR
SHEET NO. C402
S & A JOB NO. 56030JUSL1

S:\56030JUSL1\DWG\C402-Auto Turn Exhibit.dwg, 1/29/2013 2:47:46 PM, KGilson, 1:1

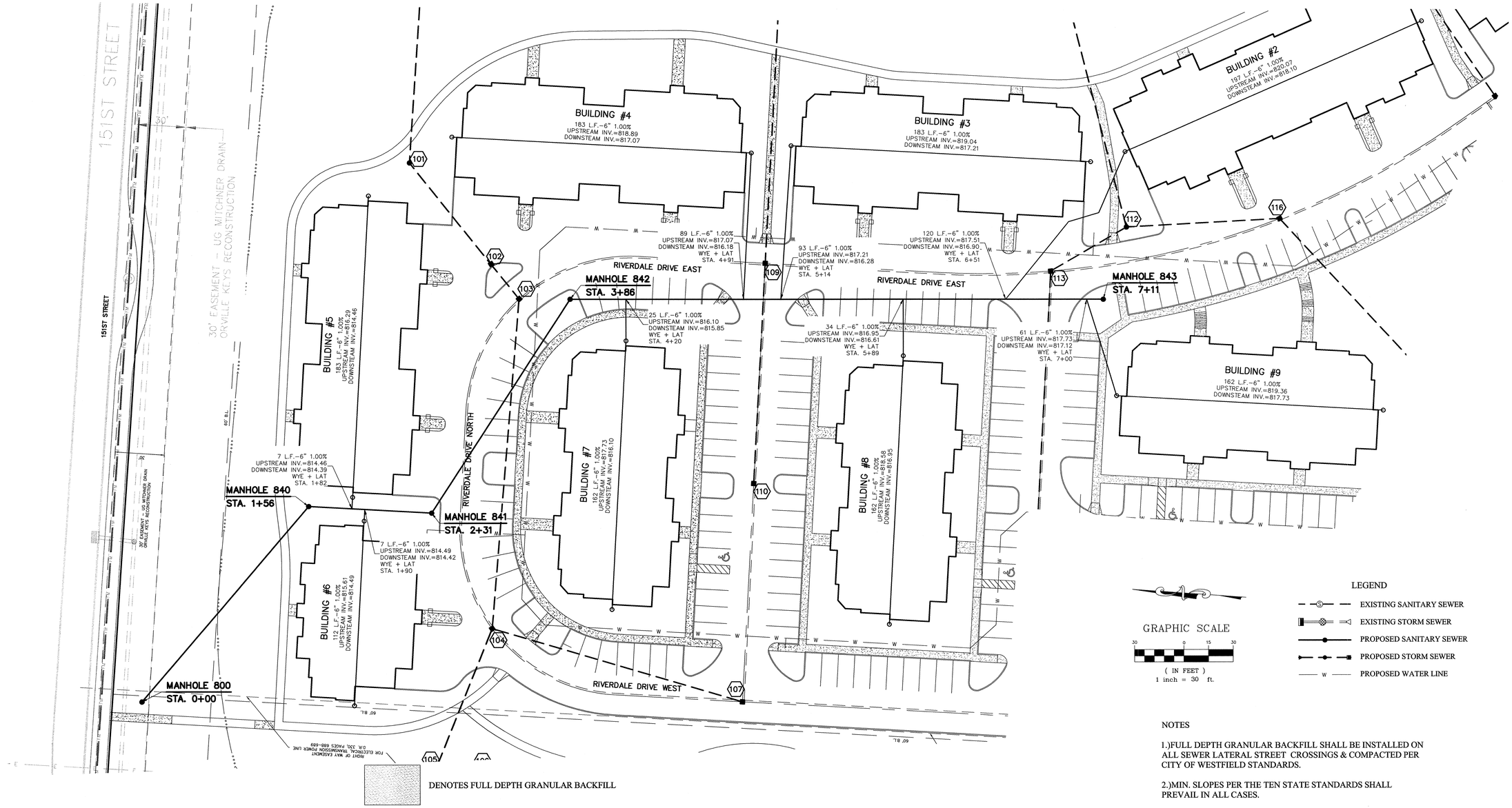


DENOTES FULL DEPTH GRANULAR BACKFILL

GRAPHIC SCALE

30 0 15 30

( IN FEET )
1 inch = 30 ft.

LEGEND

- EXISTING SANITARY SEWER
- EXISTING STORM SEWER
- PROPOSED SANITARY SEWER
- PROPOSED STORM SEWER
- PROPOSED WATER LINE

NOTES

1.)FULL DEPTH GRANULAR BACKFILL SHALL BE INSTALLED ON ALL SEWER LATERAL STREET CROSSINGS & COMPACTED PER CITY OF WESTFIELD STANDARDS.

2.)MIN. SLOPES PER THE TEN STATE STANDARDS SHALL PREVAIL IN ALL CASES.

3.)CONTRCTOR SHALL INSTALL A LOCATE WIRE ALONG ENTIRE LENGTH OF ALL LATERALS.

4.)CONTRACTOR SHALL INSTALL LATERAL NO GREATER THAN 6' BELOW PAD GRADE AT LATERAL END.

5.)MANHOLE STRUCTURES TO BE CONSTRUCTED TO REQUIRE ONE-4" RISER RING NO MORE, NO LESS TO MEET PLAN T.C. GRADE.

6.)ALL SANITARY SEWER LATERALS MUST HAVE LOCATE WIRE RUN WHEN INSTALLING.

7.)ALL SANITARY SEWERS SHALL NOT BE WITHIN 100' OF ANY WATER WELLS.

SCALE: 1"=50' HOR.
1"=5' VERT.

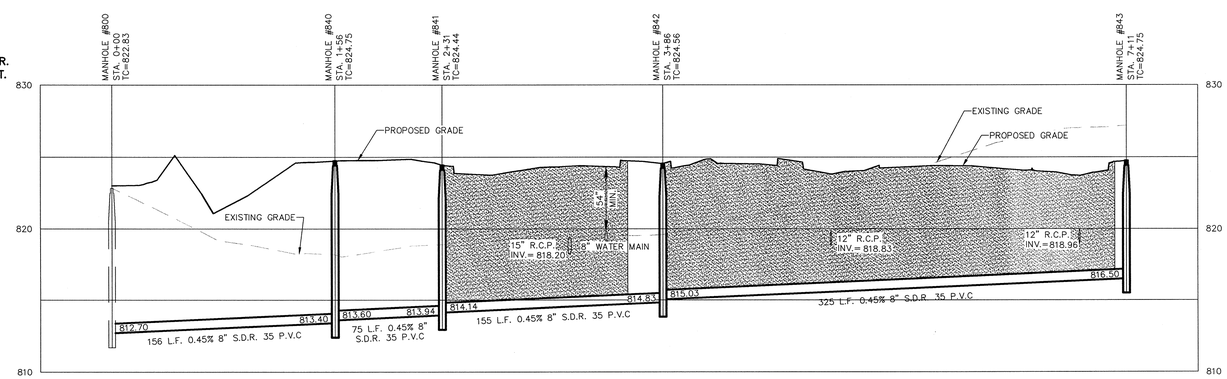


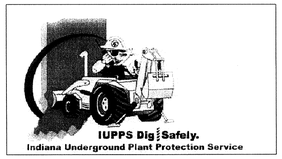


811 Know what's below. Call before you dig.

| DATE | MARK | REVISIONS | BY |
|---|---|---|---|

DAVID J. STOEPPELWERTH
REGISTERED
No. 19358
STATE OF INDIANA
PROFESSIONAL ENGINEER

THIS DRAWING IS NOT INTENDED TO BE REPRESENTED AS A RETRACEMENT OR ORIGINAL BOUNDARY SURVEY, A ROUTE SURVEY, OR A SURVEYOR LOCATION REPORT.

CERTIFIED: 2/1/12

David J. Stoeppelwerth


STOEPPELWERTH
& ASSOCIATES, INC.
ALWAYS ON
7965 East 106th Street, Fishers, IN 46038-2505
phone: 317.849.5935 fax: 317.849.5942


# SANITARY PLAN & PROFILE
# BRIDGEWATER APARTMENTS

HAMILTON COUNTY, INDIANA

WESTFIELD

DRAWN BY: KRG
CHECKED BY: BKR

SHEET NO.
C500

S & A JOB NO.
56030JUSL1

S:\56030JUS-L.1\DWG\C500-Sanitary Plan & Profile.dwg, 1/29/2013 2:51:18 PM, KGilson, 1:1

DENOTES FULL DEPTH GRANULAR BACKFILL

LEGEND

- EXISTING SANITARY SEWER
- EXISTING STORM SEWER
- PROPOSED SANITARY SEWER
- PROPOSED STORM SEWER
- PROPOSED WATER LINE

GRAPHIC SCALE

( IN FEET )
1 inch = 30 ft.

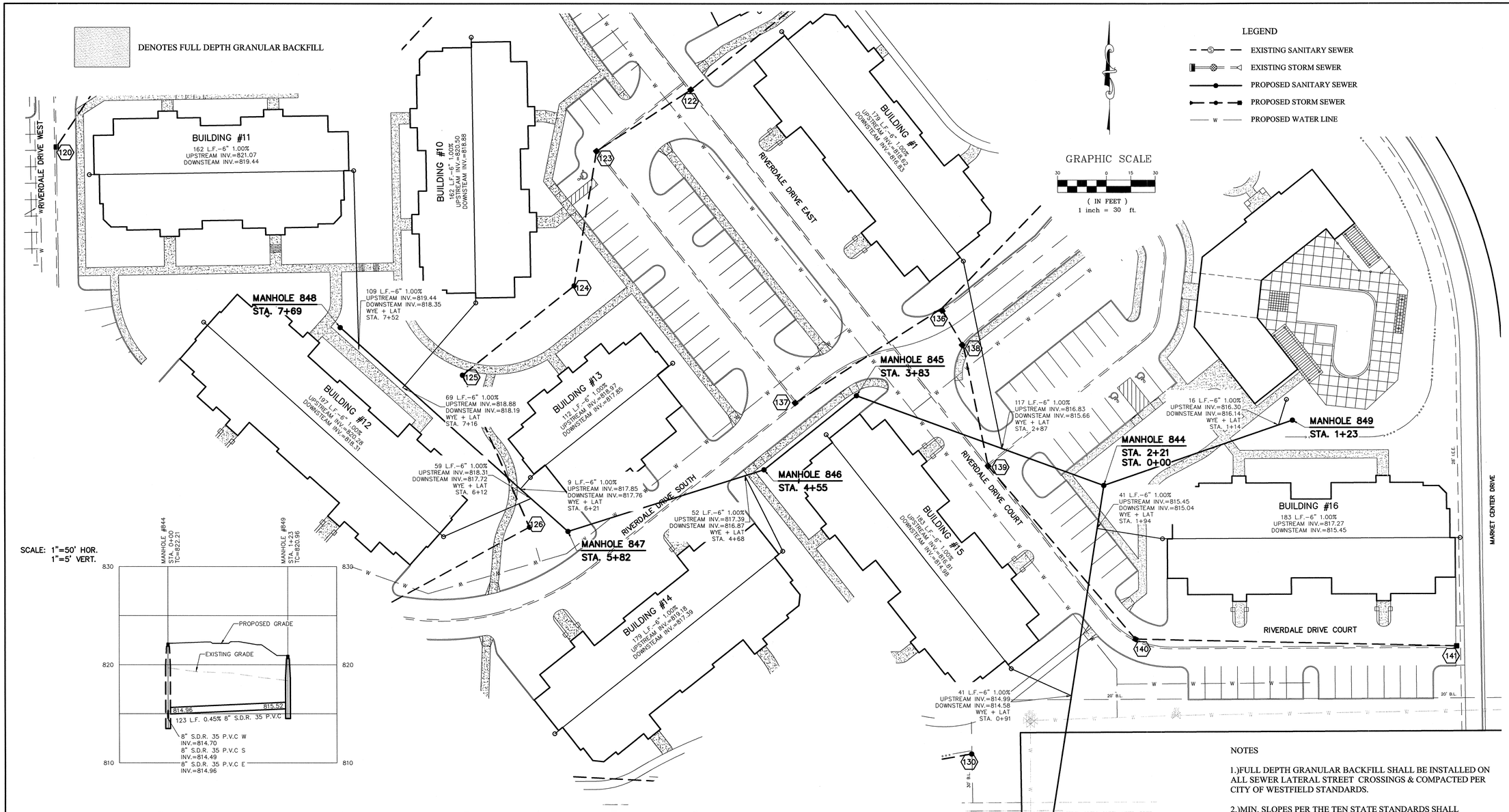


SCALE: 1"=50' HOR.
1"=5' VERT.




SCALE: 1"=50' HOR.
1"=5' VERT.

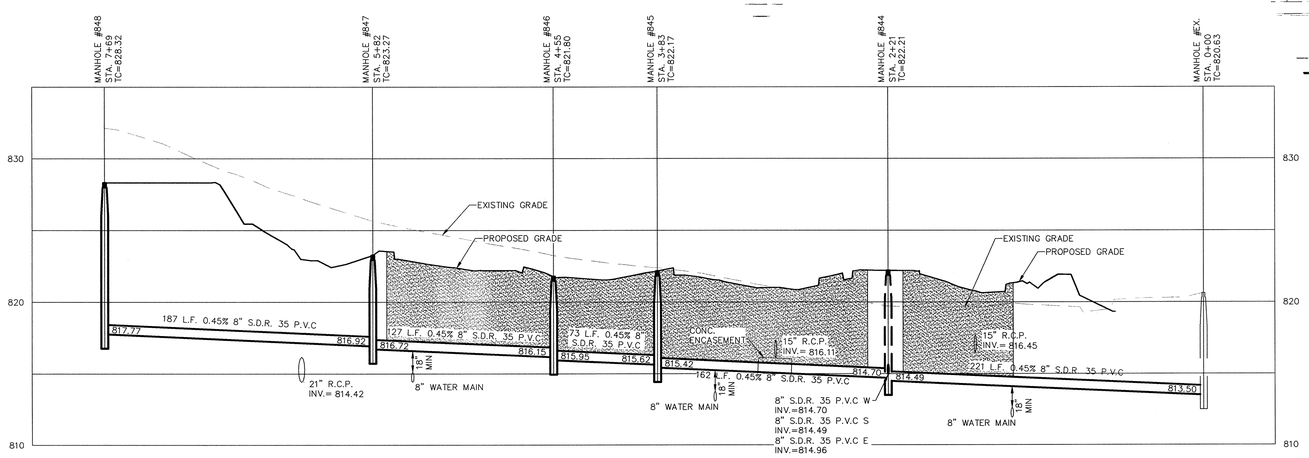


NOTES

1.)FULL DEPTH GRANULAR BACKFILL SHALL BE INSTALLED ON ALL SEWER LATERAL STREET CROSSINGS & COMPACTED PER CITY OF WESTFIELD STANDARDS.

2.)MIN. SLOPES PER THE TEN STATE STANDARDS SHALL PREVAIL IN ALL CASES.

3.)CONTRCTOR SHALL INSTALL A LOCATE WIRE ALONG ENTIRE LENGTH OF ALL LATERALS.

4.)CONTRACTOR SHALL INSTALL LATERAL NO GREATER THAN 6' BELOW PAD GRADE AT LATERAL END.

5.)MANHOLE STRUCTURES TO BE CONSTRUCTED TO REQUIRE ONE-4" RISER RING NO MORE, NO LESS TO MEET PLAN T.C. GRADE.

6.)ALL SANITARY SEWER LATERALS MUST HAVE LOCATE WIRE RUN WHEN INSTALLING.

7.)ALL SANITARY SEWERS SHALL NOT BE WITHIN 100' OF ANY WATER WELLS.

IUPPS Dig Safely.
Indiana Underground Plant Protection Service

811
Know what's below.
Call before you dig.

| DATE | MARK | REVISIONS | BY |
|---|---|---|---|

DAVID J. STOEPPELWERTH
REGISTERED
No. 19358
STATE OF INDIANA
PROFESSIONAL ENGINEER

THIS DRAWING IS NOT INTENDED TO BE REPRESENTED AS A RETRACEMENT OR ORIGINAL BOUNDARY SURVEY; A ROUTE SURVEY OR A SURVEYOR LOCATION REPORT.

CERTIFIED: 2/1/12

David J. Stoeppelwerth


STOEPPELWERTH
ALWAYS ON
7965 East 106th Street, Fishers, IN 46038-2505
phone: 317.849.5935 fax: 317.849.5942


# SANITARY PLAN & PROFILE
## BRIDGEWATER APARTMENTS

HAMILTON COUNTY, INDIANA
WESTFIELD

DRAWN BY: KRG
CHECKED BY: BKR
SHEET NO. C501
S & A JOB NO. 56030JUSL1

S:\56030JUS-L1\DWG\C501-Sanitary Plan & Profile.dwg, 1/29/2013 2:53:00 PM, KGilson, 1:1

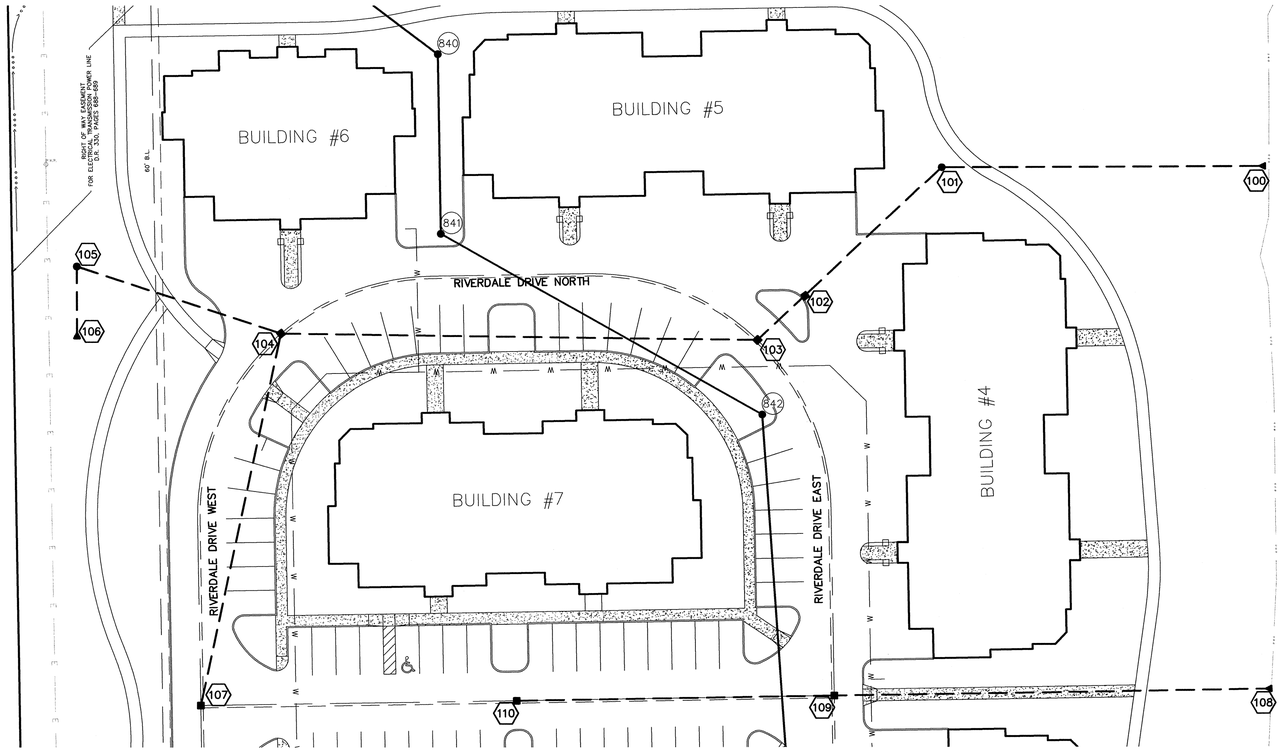


GRAPHIC SCALE

30 0 15 30

( IN FEET )
1 inch = 30 ft.

DENOTES FULL DEPTH GRANULAR BACKFILL

NOTES:

ALL STORM STRUCTURES TO RECEIVE SOLID LID CASTINGS ARE TO BE CONSTRUCTED TO PROVIDE ONE 4" RISER RING NO MORE, NO LESS TO ACHIEVE PLAN RIM GRADE.

ALL YARD INLETS ARE TO BE CONSTRUCTED AT A TOLERANCE OF +0.00' TO -0.20' OF PLAN GRADE.

ALL STORM SEWER CASTINGS SHALL BE LABELED "DUMP NO WASTE-DRAINS TO WATERWAY"

ALL STORM CROSSINGS IN RIGHT OF WAY WITH LESS THAN 30" COVER TO FINISH PAVEMENT GRADE WILL BE BACKFILLED WITH #8 STONE

ALL SSD'S (SUBSURFACE DRAINS) WILL NEED TO BE DOUBLE WALL SMOOTH BORE PERFORATED (HDPE) PIPE.

SUBSURFACE DRAIN TILES THAT OUTLET INTO A POND NEED TO HAVE A SCREEN ATTACHED TO THE END.

DEBRIS GUARDS ARE TO BE INSTALLED ON ALL OPEN ENDED INLETS.

ALL INLETS DEEPER THAN 4 FEET NEED TO BE MANHOLES.

SCALE: 1"=50' HOR.
1"=5' VERT.

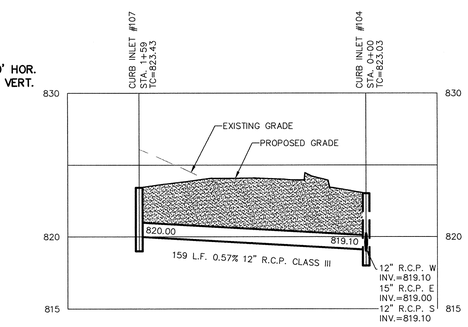


SCALE: 1"=50' HOR.
1"=5' VERT.

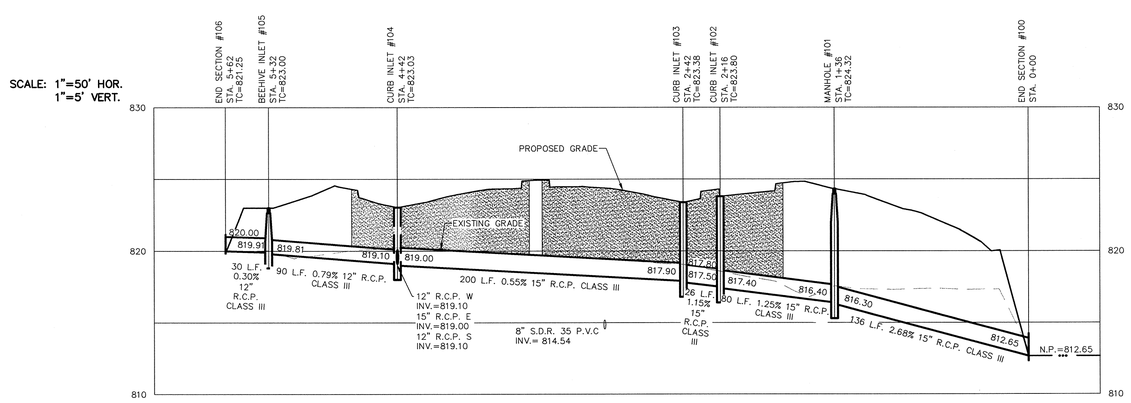


SCALE: 1"=50' HOR.
1"=5' VERT.

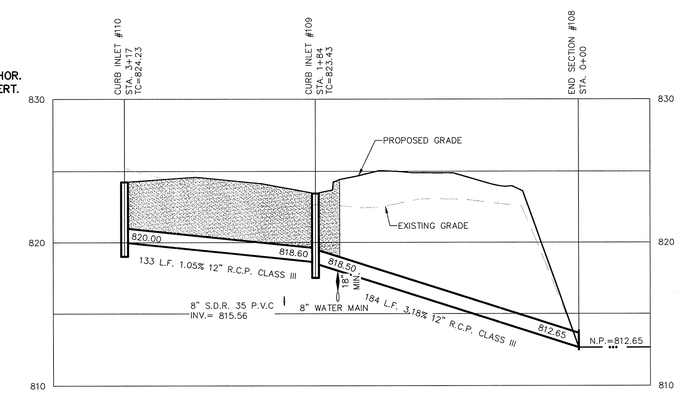


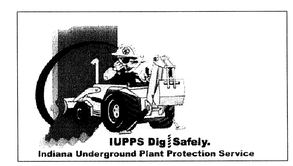


811
Know what's **below.**
**Call** before you dig.

| DATE | MARK | REVISIONS | BY |
|---|---|---|---|

DAVID J. STOEPPELWERTH
REGISTERED
No. 19358
STATE OF INDIANA
PROFESSIONAL ENGINEER

THIS DRAWING IS NOT INTENDED TO BE REPRESENTED AS A RETRACEMENT OR ORIGINAL BOUNDARY SURVEY, A ROUTE SURVEY OR A SURVEYOR LOCATION REPORT.

CERTIFIED: 2/1/12


STOEPPELWERTH
ALWAYS ON
7965 East 106th Street, Fishers, IN 46038-2505
phone: 317.849.5935 fax: 317.849.5942


# STORM PLAN & PROFILE
# BRIDGEWATER APARTMENTS

HAMILTON COUNTY, INDIANA

WESTFIELD

DRAWN BY: KRG
CHECKED BY: BKR

SHEET NO.
C600

S & A JOB NO.
56030JUSL1

S:\56030JUS-L1\DWG\C600-Storm Plan & Profile.dwg, 1/29/2013 2:54:45 PM, KGilson, 1:1

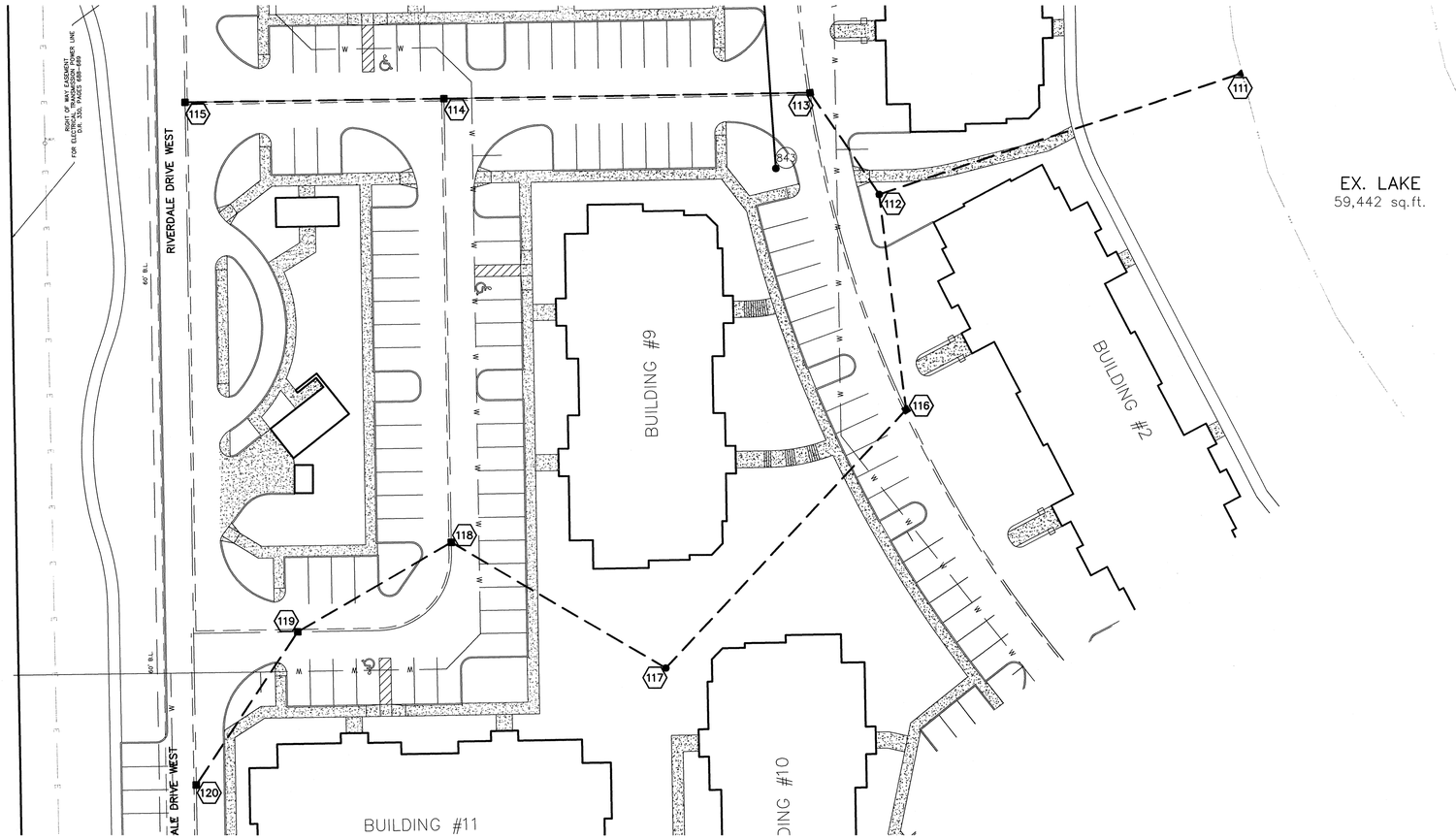


GRAPHIC SCALE

30 0 15 30

( IN FEET )
1 inch = 30 ft.

DENOTES FULL DEPTH GRANULAR BACKFILL

NOTES:

ALL STORM STRUCTURES TO RECEIVE SOLID LID CASTINGS ARE TO BE CONSTRUCTED TO PROVIDE ONE 4" RISER RING NO MORE, NO LESS TO ACHIEVE PLAN RIM GRADE.

ALL YARD INLETS ARE TO BE CONSTRUCTED AT A TOLERANCE OF +0.00' TO -0.20' OF PLAN GRADE.

ALL STORM SEWER CASTINGS SHALL BE LABELED "DUMP NO WASTE-DRAINS TO WATERWAY"

ALL STORM CROSSINGS IN RIGHT OF WAY WITH LESS THAN 30" COVER TO FINISH PAVEMENT GRADE WILL BE BACKFILLED WITH #8 STONE

ALL SSD'S (SUBSURFACE DRAINS) WILL NEED TO BE DOUBLE WALL SMOOTH BORE PERFORATED (HDPE) PIPE.

SUBSURFACE DRAIN TILES THAT OUTLET INTO A POND NEED TO HAVE A SCREEN ATTACHED TO THE END.

DEBRIS GUARDS ARE TO BE INSTALLED ON ALL OPEN ENDED INLETS.

ALL INLETS DEEPER THAN 4 FEET NEED TO BE MANHOLES.

SCALE: 1"=50' HOR.
1"=5' VERT.

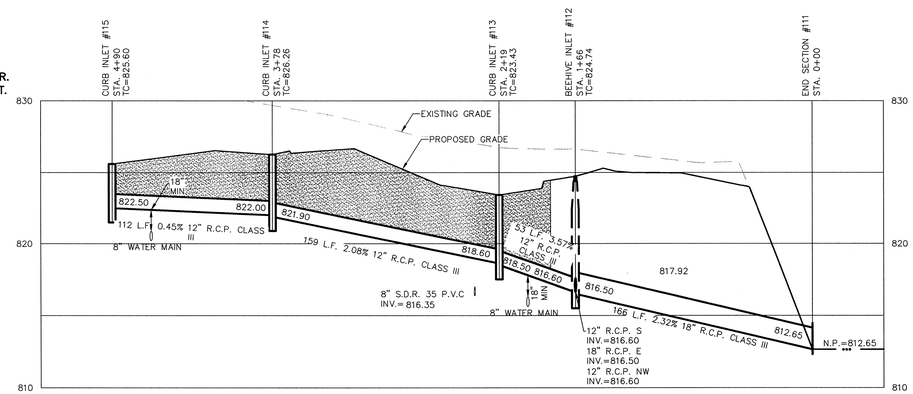


SCALE: 1"=50' HOR.
1"=5' VERT.

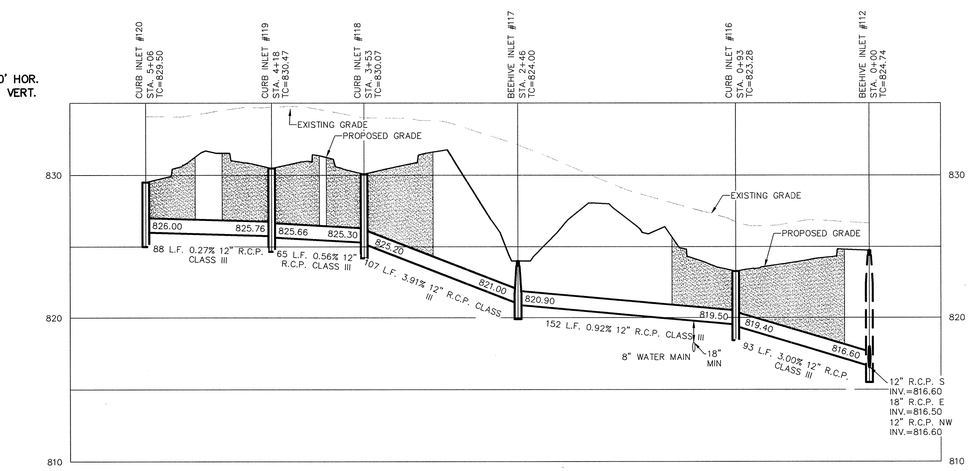


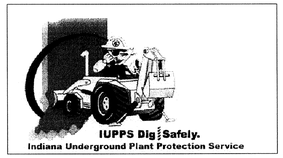


811 Know what's below. Call before you dig.

| DATE | MARK | REVISIONS | BY |
|---|---|---|---|

DAVID J. STOEPPELWERTH
REGISTERED
No. 19358
STATE OF INDIANA
PROFESSIONAL ENGINEER

THIS DRAWING IS NOT INTENDED TO BE REPRESENTED AS A RETRACEMENT OR ORIGINAL BOUNDARY SURVEY, A ROUTE SURVEY, OR A SURVEYOR LOCATION REPORT.

CERTIFIED: 2/1/12


STOEPPELWERTH
ALWAYS ON
7965 East 106th Street, Fishers, IN 46038-2505
phone: 317.849.5935 fax: 317.849.5942


# STORM PLAN & PROFILE
## BRIDGEWATER APARTMENTS

HAMILTON COUNTY, INDIANA

WESTFIELD

| DRAWN BY: | CHECKED BY: |
|---|---|
| KRG | BKR |

SHEET NO.
C601

S & A JOB NO.
56030JUSL1

S:\56030JUS-L1\DWG\C601-Storm Plan & Profile.dwg, 1/29/2013 2:56:28 PM, KGilson, 1:1

GRAPHIC SCALE

30 0 15 30

( IN FEET )
1 inch = 30 ft.

DENOTES FULL DEPTH GRANULAR BACKFILL

NOTES:

ALL STORM STRUCTURES TO RECEIVE SOLID LID CASTINGS ARE TO BE CONSTRUCTED TO PROVIDE ONE 4" RISER RING NO MORE, NO LESS TO ACHIEVE PLAN RIM GRADE.

ALL YARD INLETS ARE TO BE CONSTRUCTED AT A TOLERANCE OF +0.00' TO -0.20' OF PLAN GRADE.

ALL STORM SEWER CASTINGS SHALL BE LABELED "DUMP NO WASTE-DRAINS TO WATERWAY"

ALL STORM CROSSINGS IN RIGHT OF WAY WITH LESS THAN 30" COVER TO FINISH PAVEMENT GRADE WILL BE BACKFILLED WITH #8 STONE

ALL SSD'S (SUBSURFACE DRAINS) WILL NEED TO BE DOUBLE WALL SMOOTH BORE PERFORATED (HDPE) PIPE.

SUBSURFACE DRAIN TILES THAT OUTLET INTO A POND NEED TO HAVE A SCREEN ATTACHED TO THE END.

DEBRIS GUARDS ARE TO BE INSTALLED ON ALL OPEN ENDED INLETS.

ALL INLETS DEEPER THAN 4 FEET NEED TO BE MANHOLES.

SCALE: 1"=50' HOR.
1"=5' VERT.

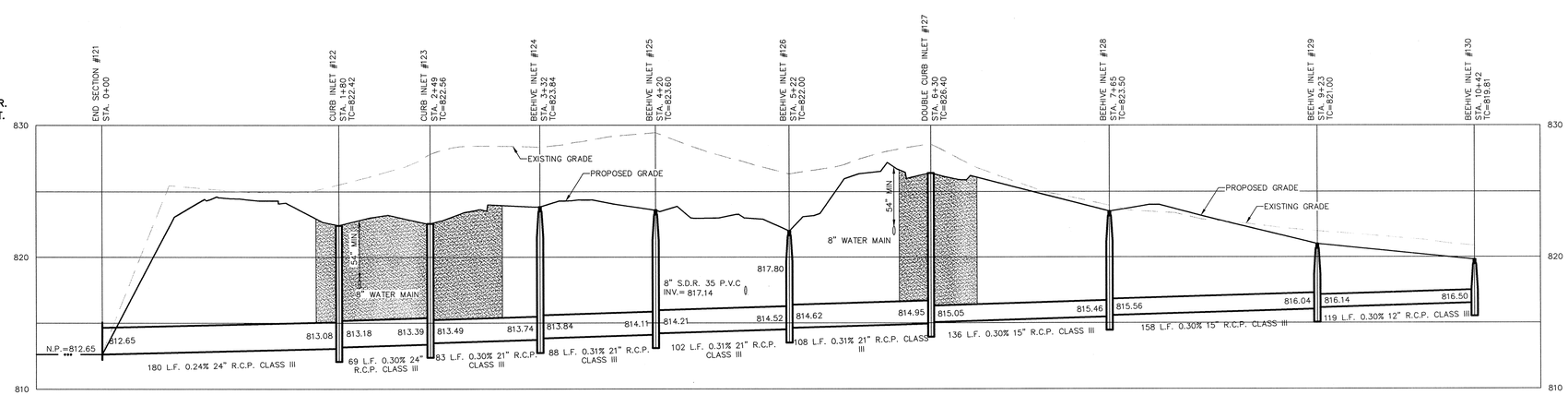


IUPPS Dig Safely.
Indiana Underground Plant Protection Service

811
Know what's below.
Call before you dig.

| DATE | MARK | REVISIONS | BY |
|---|---|---|---|

DAVID J. STOEPPELWERTH
REGISTERED
No. 19358
STATE OF INDIANA
PROFESSIONAL ENGINEER

THIS DRAWING IS NOT INTENDED TO BE REPRESENTED AS A RETRACEMENT OR ORIGINAL BOUNDARY SURVEY, A ROUTE SURVEY, OR A SURVEYOR LOCATION REPORT.

CERTIFIED: 2/1/12


STOEPPELWERTH
ALWAYS ON
7965 East 106th Street, Fishers, IN 46038-2505
phone: 317.849.5935 fax: 317.849.5942


STORM PLAN & PROFILE
BRIDGEWATER APARTMENTS
HAMILTON COUNTY, INDIANA
WESTFIELD

DRAWN BY: KRG
CHECKED BY: BKR
SHEET NO. C602
S & A JOB NO. 56030JUSL1

S:\56030JUSL1\DWG\C602-Storm Plan & Profile.dwg, 1/30/2013 10:36:16 AM, KGilson, 1:1

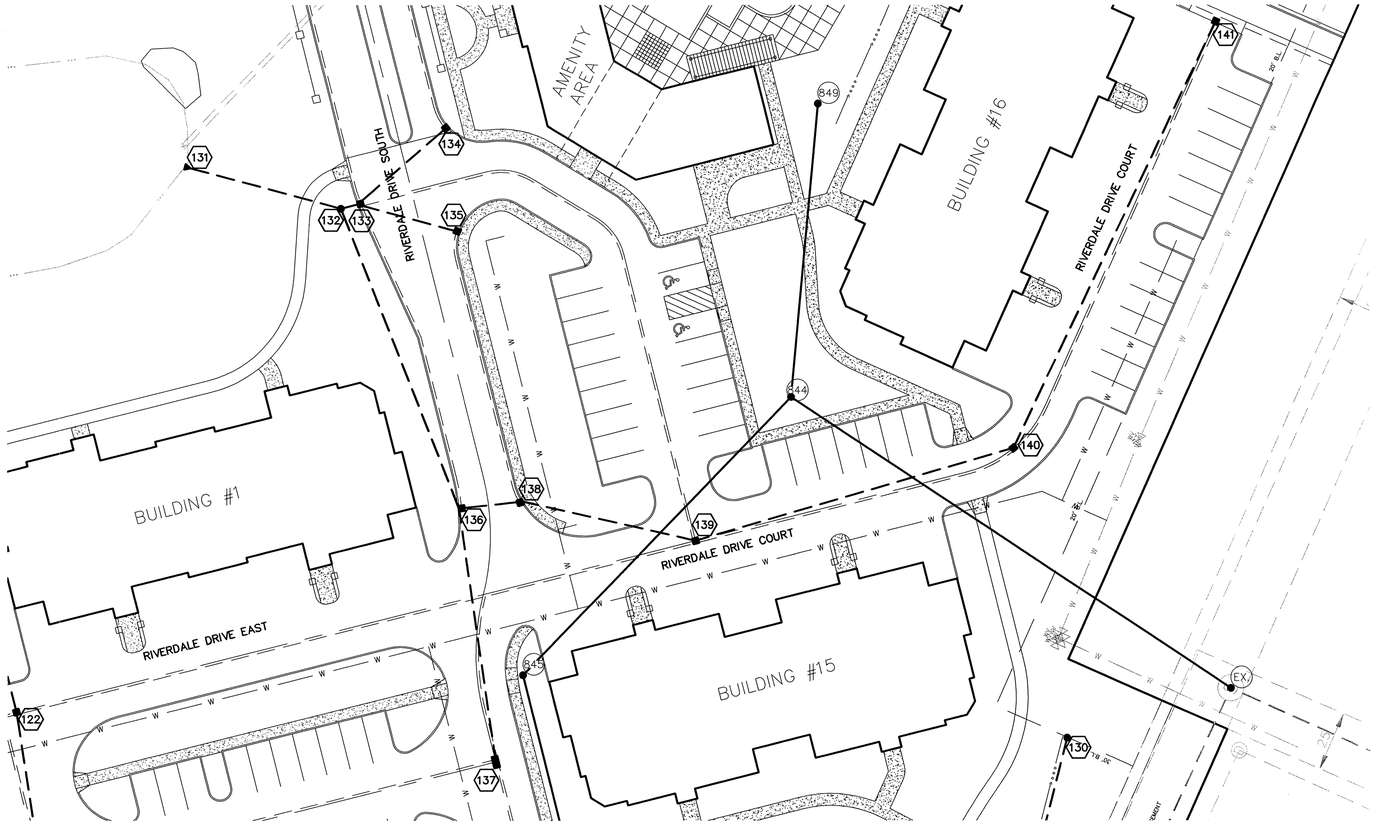


GRAPHIC SCALE

30 0 15 30

( IN FEET )
1 inch = 30 ft.

DENOTES FULL DEPTH GRANULAR BACKFILL

NOTES:

ALL STORM STRUCTURES TO RECEIVE SOLID LID CASTINGS ARE TO BE CONSTRUCTED TO PROVIDE ONE 4" RISER RING NO MORE, NO LESS TO ACHIEVE PLAN RIM GRADE.

ALL YARD INLETS ARE TO BE CONSTRUCTED AT A TOLERANCE OF +0.00' TO -0.20' OF PLAN GRADE.

ALL STORM SEWER CASTINGS SHALL BE LABELED "DUMP NO WASTE-DRAINS TO WATERWAY"

ALL STORM CROSSINGS IN RIGHT OF WAY WITH LESS THAN 30" COVER TO FINISH PAVEMENT GRADE WILL BE BACKFILLED WITH #8 STONE

ALL SSD'S (SUBSURFACE DRAINS) WILL NEED TO BE DOUBLE WALL SMOOTH BORE PERFORATED (HDPE) PIPE.

SUBSURFACE DRAIN TILES THAT OUTLET INTO A POND NEED TO HAVE A SCREEN ATTACHED TO THE END.

DEBRIS GUARDS ARE TO BE INSTALLED ON ALL OPEN ENDED INLETS.

ALL INLETS DEEPER THAN 4 FEET NEED TO BE MANHOLES.

SCALE: 1"=50' HOR.
1"=5' VERT.

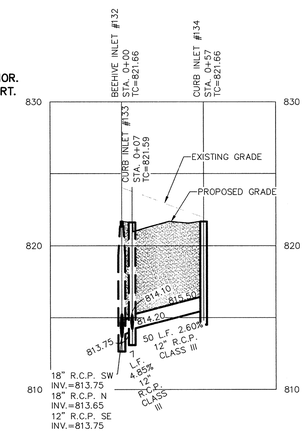


SCALE: 1"=50' HOR.
1"=5' VERT.

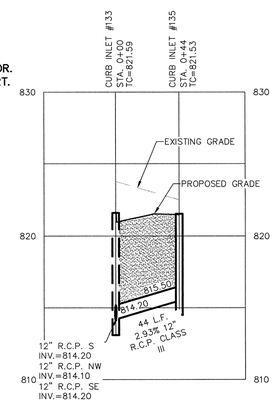


SCALE: 1"=50' HOR.
1"=5' VERT.

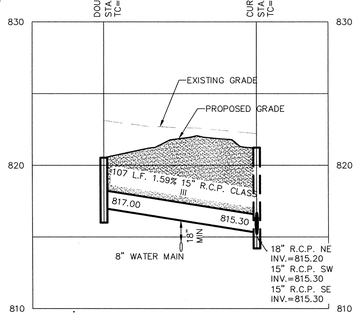


SCALE: 1"=50' HOR.
1"=5' VERT.

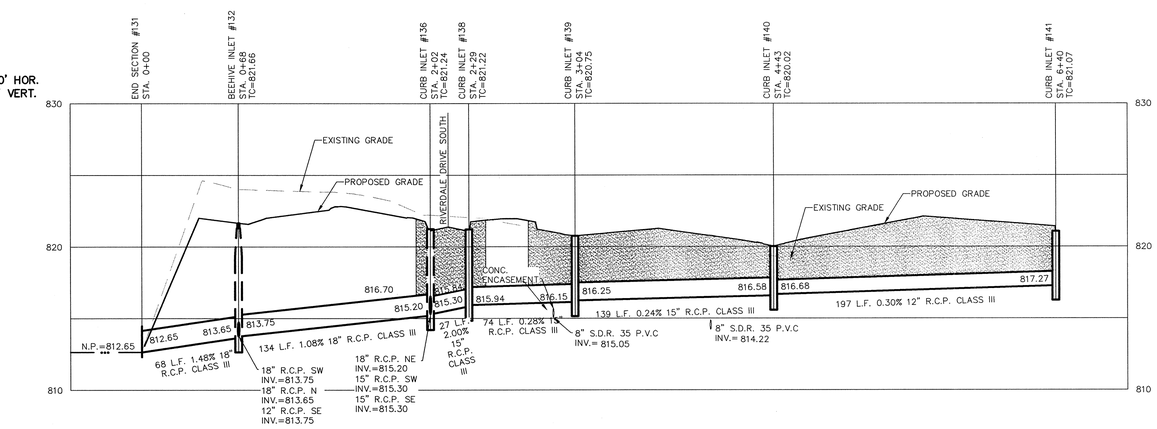


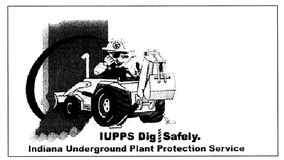


811
Know what's below.
Call before you dig.

| DATE | MARK | REVISIONS | BY |
|---|---|---|---|

DAVID J. STOEPPELWERTH
REGISTERED
No. 19358
STATE OF INDIANA
PROFESSIONAL ENGINEER

THIS DRAWING IS NOT INTENDED TO BE REPRESENTED AS A RETRACEMENT OR ORIGINAL BOUNDARY SURVEY, A ROUTE SURVEY OR A SURVEYOR LOCATION REPORT.

CERTIFIED: 2/1/12


STOEPPELWERTH
ALWAYS ON
7965 East 106th Street, Fishers, IN 46038-2505
phone: 317.849.5935 fax: 317.849.5942


# STORM PLAN & PROFILE
# BRIDGEWATER APARTMENTS

HAMILTON COUNTY, INDIANA

WESTFIELD

DRAWN BY: KRG
CHECKED BY: BKR
SHEET NO. C603
S & A JOB NO. 56030JUSL1

S:\56030JUS-L1\DWG\C603-Storm Plan & Profile.dwg, 1/30/2013 10:33:25 AM, KGilson, 1:1

GRAPHIC SCALE

50 0 25 50

( IN FEET )
1 inch = 50 ft.

LEGEND

- EXISTING WATER MAIN
- PROPOSED WATER MAIN
- EXISTING HYDRANT
- PROPOSED HYDRANT
- BUTTERFLY VALVE
- VALVE
- PLUG
- REDUCER
- T.J. TEE
- M.J. SLEEVE
- BEND
- KICKER BLOCK
- CASING PIPE
- G — G GAS LINES
- T — T TELEPHONE LINES
- E — E ELECTRIC LINES

WATER MAIN CHART

| Pipe Size | Pipe Type | Total Pipe |
|---|---|---|
| 8" | C-900 | 3,108' |
| | | |
| | TOTAL | 3,108' |

NOTE: ALL WATERMAIN SHALL BE INSTALLED WITH A MIN. OF 8'-0" OF SEPARATION BETWEEN THE MAIN AND SEWER STRUCTURES AND A MIN. OF 10'-0" OF SEPARATION BETWEEN WATER SANITARY AND STORM PIPE.

▶ FDC CONNECTIONS.

■ WATER METERS.




TYPICAL WATER LATERAL

NOTES:

1. C900 TO BE USED FOR ALL WATER MAIN INSTALLATIONS. 8" OR LESS.

2. ALL FIRE HYDRANTS SHALL HAVE A FIVE (5) INCH STORZ'S CONNECTION (MUELLER MODEL 290220 FOR CASTING AND 290221 CAP OR COMPARABLE TOO AND APPROVED BY WPWD). FIRE HYDRANTS SHALL BE PLACED PER THE DIRECTION OF WESTFIELD FIRE DEPARTMENT. FIRE HYDRANTS SHALL BE PAINTED PRIOR TO DELIVERY AND AFTER INSTALLATION. FIRE HYDRANTS NEED TO BE PAINTED WITH 2 COATS OF MAB FIRE PROTECTION RED(7068).

3. ALL VALVES TO BE POSI CAP INSTALLED.

4. C900 PIPE SHALL BE SADDLE TAPPED, AND BEDDED WITH SAND 6" UNDER PIPE AND 12" OVER THE PIPE.

5. BLUE REFLECTORS SHALL BE INSTALLED IN PAVEMENT TO MARK FIRE HYDRANTS (PRIVATE OR PUBLIC) PER THE CITY OF WESTFIELD'S UTILITY AND INFRASTRUCTURE CONSTRUCTION STANDARDS.

6. #12 GAUGE WIRE SHALL BE TAPED TO THE TOP OF THE MAIN AND PULLED THROUGH ALL VALVE BOXES.

7. MARKING TAPE MUST BE INSTALLED 2' ABOVE THE WATER MAIN.

8. ALL ROAD CROSSING MUST BE FULL DEPTH GRANULAR BACKFILL.

9. ALL WATER MAIN WITHIN 5' OF THE PAVEMENT MUST BE FULL DEPTH GRANULAR BACKFILL.

Snowplowable raised pavement markers (with blue reflector lens)

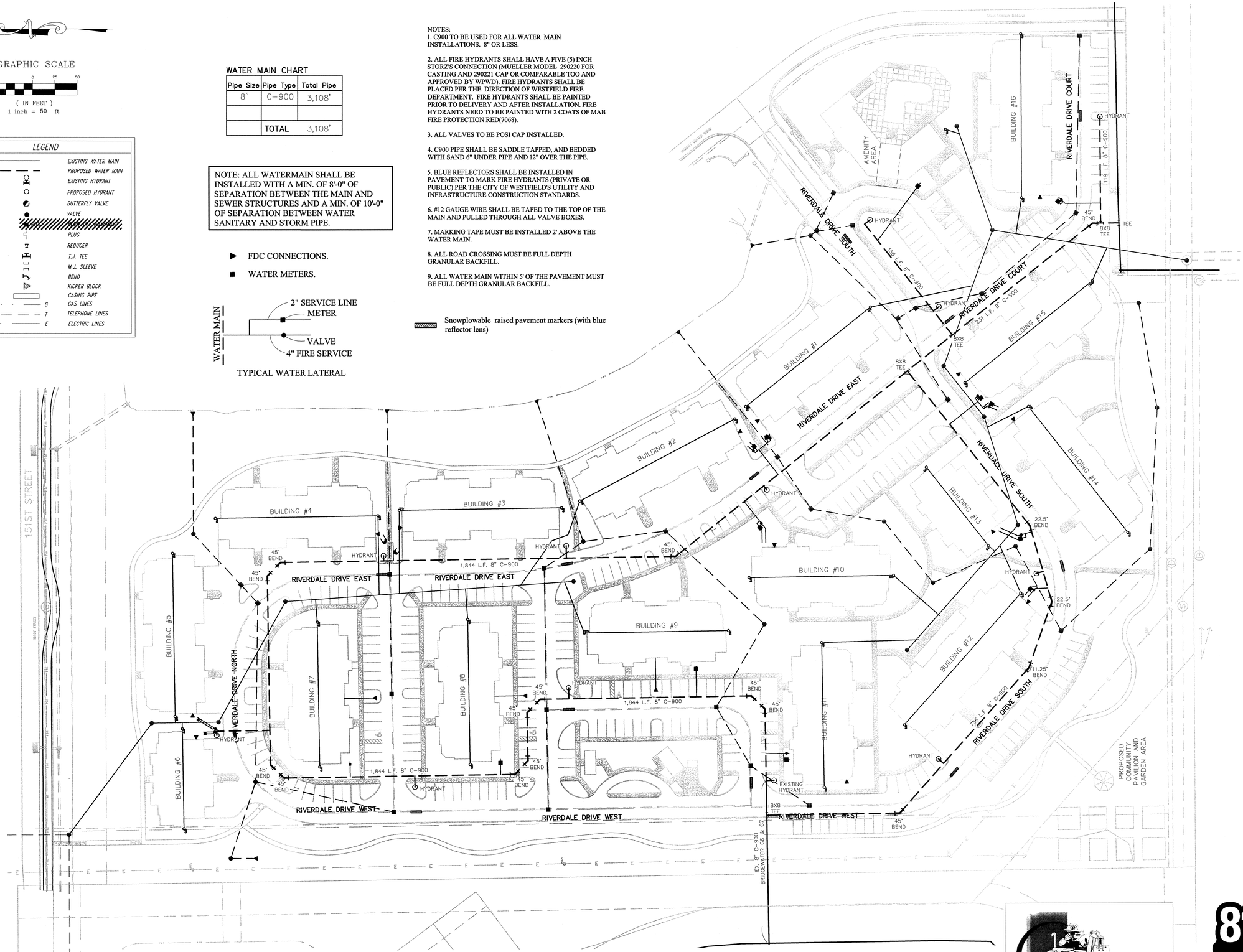


IUPPS Dig Safely.
Indiana Underground Plant Protection Service

811 Know what's below. Call before you dig.

| DATE | MARK | REVISIONS | BY |
|---|---|---|---|

DAVID J. STOEPPELWERTH REGISTERED No. 19358 STATE OF INDIANA PROFESSIONAL ENGINEER

THIS DRAWING IS NOT INTENDED TO BE REPRESENTED AS A RETRACEMENT OR ORIGINAL BOUNDARY SURVEY, A ROUTE SURVEY, OR A SURVEYOR LOCATION REPORT.

CERTIFIED: 2/1/12

David J. Stoeppelwerth


STOEPPELWERTH
ALWAYS ON
7965 East 106th Street, Fishers, IN 46038-2505
phone: 317.849.5935 fax: 317.849.5942


WATER PLAN
BRIDGEWATER APARTMENTS
HAMILTON COUNTY, INDIANA
WESTFIELD

DRAWN BY: KRG
CHECKED BY: BKR
SHEET NO. C700
S & A JOB NO. 56030JUSL1

S:\56030JUS-L1\DWG\C700-Water Plan.dwg, 1/29/2013 3:19:04 PM, KGilson, 1:1

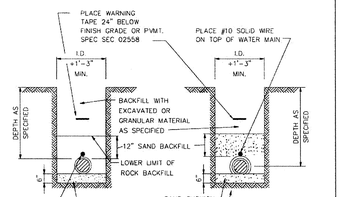


ROCK EXCAVATION
FOR C900 PVC AND DUCTILE IRON PIPE

EARTH EXCAVATION
FOR C900 PVC PIPE

NOTE:
DUCTILE IRON PIPE OR HDPE (DR11) PIPE DOES NOT REQUIRE SPECIAL BACKFILL UNLESS DIRECTED ON THE PLANS OR REQUIRED BY THE DIRECTOR OR THEIR DESIGNEE.

WATER MAIN INSTALLATION DETAIL

TOWN OF WESTFIELD, INDIANA

10/9/06 DATE — FIGURE W-1

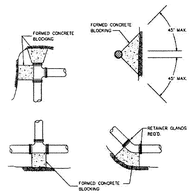


| SIZE | TEE & PLUG | 90° BEND | 45° BEND | 22-1/2° BEND | 11-1/4° BEND |
|---|---|---|---|---|---|
| 4" | 2.0 | 3.5 | 1.5 | 1.0 | 1.0 |
| 6" | 4.0 | 5.5 | 3.0 | 1.5 | 1.0 |
| 8" | 8.5 | 9.0 | 5.0 | 2.5 | 1.5 |
| 10" | 10.5 | 14.0 | 7.5 | 4.0 | 2.0 |
| 12" | 14.0 | 20.0 | 11.0 | 5.5 | 3.0 |
| 14" | 18.5 | 27.0 | 14.5 | 7.5 | 4.0 |
| 16" | 25.0 | 35.0 | 18.0 | 10.0 | 5.0 |
| 18" | 31.5 | 44.5 | 24.0 | 12.5 | 6.5 |
| 20" | 40.0 | 54.5 | 31.0 | 16.5 | 7.5 |
| 24" | 55.5 | 78.5 | 42.5 | 22.0 | 11.0 |
| 30" | 86.5 | 122.0 | 66.0 | 34.0 | 17.0 |
| 36" | 124.0 | 175.5 | 95.0 | 48.5 | 24.5 |
| 42" | 168.0 | 237.5 | 128.5 | 65.5 | 33.0 |
| 48" | 212.0 | 306.0 | 160.0 | 85.0 | 42.0 |

(AREA IN SQ. FT. REQUIRED FOR CONCRETE THRUST BLOCKING)

NOTE:
THE THRUST BLOCK AREAS ARE BASED ON A SOIL BEARING LOAD OF 2,000 LB./SQ. FT.

GREASE OR PLACE A LAYER OF VISQUEEN ON ALL WATER MAIN SURFACES PRIOR TO PLACEMENT OF CONCRETE

THRUST BLOCK DETAIL

TOWN OF WESTFIELD, INDIANA

10/9/06 DATE — FIGURE W-2

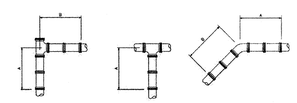


NOTE:
THE LENGTHS OF PIPE WITH RESTRAINED JOINTS ARE BASED ON A COMPACTED SILTY SOIL SURROUNDING THE PIPE

| SIZE | A TEE & PLUG | B 90° BEND | B 45° BEND | B 22-1/2° BEND | B 11-1/4° BEND |
|---|---|---|---|---|---|
| 6" | 12'-0" | 17'-0" | 10'-0" | 6'-0" | 3'-0" |
| 8" | 16'-0" | 22'-0" | 13'-0" | 8'-0" | 4'-0" |
| 10" | 19'-0" | 27'-0" | 16'-0" | 9'-0" | 5'-0" |
| 12" | 22'-0" | 32'-0" | 19'-0" | 11'-0" | 6'-0" |
| 14" | 26'-0" | 36'-0" | 21'-0" | 12'-0" | 7'-0" |
| 16" | 29'-0" | 41'-0" | 24'-0" | 14'-0" | 8'-0" |
| 18" | 32'-0" | 45'-0" | 26'-0" | 15'-0" | 9'-0" |
| 20" | 35'-0" | 50'-0" | 29'-0" | 16'-0" | 9'-0" |
| 24" | 41'-0" | 58'-0" | 34'-0" | 19'-0" | 10'-0" |
| 30" | 50'-0" | 70'-0" | 40'-0" | 22'-0" | 12'-0" |
| 36" | 58'-0" | 82'-0" | 46'-0" | 26'-0" | 14'-0" |
| 42" | 66'-0" | 93'-0" | 52'-0" | 29'-0" | 15'-0" |

(LENGTH IN FEET REQUIRED FOR RESTRAINING JOINTS)

RESTRAINED JOINT DETAILS

TOWN OF WESTFIELD, INDIANA

10/9/06 DATE — FIGURE W-3

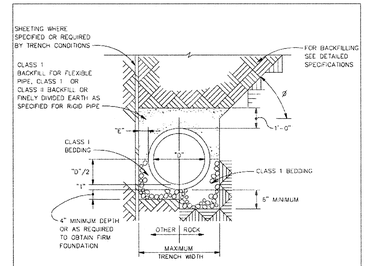


CLASS I BEDDING
TYPICAL SECTIONS IN FIRM FOUNDATIONS

NOTES:
1. SLOPE ANGLE, "*" SHALL BE LESS THAN THE FRICTION ANGLE OF THE EXCAVATED MATERIAL.
2. "O" = NOMINAL PIPE SIZE.
3. "t" = PIPE WALL THICKNESS.

PVC BEDDING DETAIL

TOWN OF WESTFIELD, INDIANA

10/9/06 DATE — FIGURE W-14

NOTE: ALL HYDRANTS SHALL BE PAINTED
WITH 2 COATS OF M.A.B.
"FIRE PROTECTION RED (7068)"
PRIOR TO DELIVERY AND AFTER INSTALLATION

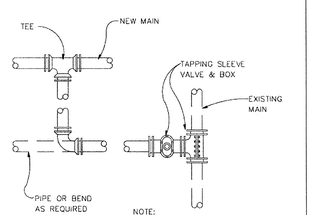


NOTE:
1. BENDS & FITTINGS AS REQUIRED SEE PLAN SHEETS FOR DETAILS
2. SEE FIGURES W-2 & W-3 FOR THRUST BLOCK AND RESTRAINED JOINT DETAILS.

CONNECTION TO EXISTING MAIN

TOWN OF WESTFIELD, INDIANA

10/9/06 DATE — FIGURE W-5

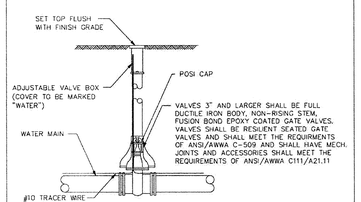


GATE VALVE AND BOX

TOWN OF WESTFIELD, INDIANA

10/9/06 DATE — FIGURE W-6

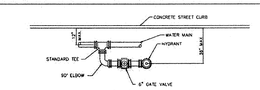


PLAN

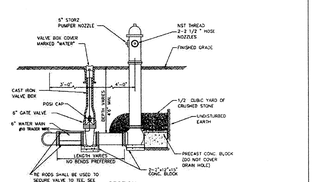


SECTION

NOTE:
1. HYDRANTS SHALL BE THE MUELLER CENTURION, AS MANUFACTURED BY THE MUELLER CO. OR THE WATEROUS PACER, AS MANUFACTURED BY THE WATEROUS CO.
2. INTEGRAL CAP NUT AND LOWER WASHER SHALL BE EPOXY COATED.
3. DOWEL SHALL BE FUSION BONDED EPOXY COATED RODS, AND NUT.
4. WESTFIELD FIRE HYDRANTS SHALL BE MAB FIRE PROTECTION RED (7068) NOBLESVILLE FIRE HYDRANTS SHALL BE MAB CAUTION YELLOW (7077)

FIRE HYDRANT DETAILS

TOWN OF WESTFIELD, INDIANA

10/9/06 DATE — FIGURE W-7

| DATE | MARK | REVISIONS | BY |
|---|---|---|---|

DAVID J. STOEPPELWERTH REGISTERED No. 19358 STATE OF INDIANA PROFESSIONAL ENGINEER

THIS DRAWING IS NOT INTENDED TO BE REPRESENTED AS A RETRACEMENT OR ORIGINAL BOUNDARY SURVEY, A ROUTE SURVEY, OR A SURVEYOR LOCATION REPORT.

CERTIFIED: 2/1/12

STOEPPELWERTH
ALWAYS ON
7965 East 106th Street, Fishers, IN 46038-2505
phone: 317.849.5935 fax: 317.849.5942

WATER DETAILS

BRIDGEWATER APARTMENTS

HAMILTON COUNTY, INDIANA

WESTFIELD

DRAWN BY: KRG | CHECKED BY: BKR

SHEET NO. C701

S & A JOB NO. 56030JUSL1

S:\56030JUS-L1\DWG\C701-WATER DTLS.dwg, 1/21/2013 4:43:37 PM, KGilson, 1:1

S:\56030JUS-L1\DWG\C800-Sanitary Details.dwg, 1/29/2013 3:20:54 PM, KGilson, 1:1

NOTES:

1. STREET CONSTRUCTION
   a. All new pavement construction shall comply with current specifications of the Hamilton County Highway Dept. and those of the Indiana Department of Highways (I.D.O.H.), with respect to design, materials and methods of construction.
   b. Subgrade shall be prepared in compliance with Section 207 of the Standard Specifications of the I.D.O.H. No traffic will be permitted on the subgrade prior to paving.
2. CURB AND GUTTER CONSTRUCTION
   a. Two-foot rolled curb and gutter construction shall comply with current Hamilton County Specifications
   b. 1" Transverse Expansion Joints are required at the ends of all returns, and all intervals not to exceed 100 feet. Joints shall be filled with preformed joint filler.
   c. Transverse Construction Joints shall be installed at 20 foot intervals, and shall be filled with 1/4" preformed joint material.
   d. Backfill shall comply with current Hamilton County Specifications.
3. STORM SEWER CONSTRUCTION
   a. Storm Sewer structures shall comply with the current Hamilton County specifications as to design and quality of construction.
   b. Material Specifications
      (1) All reinforced concrete pipe (R.C.P.) shall conform to A.S.T.M. C76-70, Class III latest revision, with joints conforming to A.S.T.M. C-433 latest revision.
      (2) All high density polyethylene resin pipe (P.R.P.) & fittings shall meet or exceed the requirements of Type III, Category 4 or 5, Grade P33 or P34, Class C per ASTM D1248.
      (3) All manholes and inlets shall be precast concrete, constructed in accordance with the Hamilton County specifications and shall conform to A.S.T.M. C-478 latest revision. Covers shall be of type specified on the Detail Sheet and conforming to A.S.T.M. A-48 latest revision.

4. SANITARY SEWER CONSTRUCTION
   a. Ten States Standards shall prevail as to materials and methods of construction.
   b. The contractor shall furnish all bonds necessary to get permits prior to starting construction, and shall verify all existing utility locations around the proposed construction site. The contractor shall notify Westfield Utilities Inspection one week prior to beginning any sanitary sewer construction.
   c. NO CONSTRUCTION WILL BE ALLOWED TO BEGIN PRIOR TO THE DATE SPECIFIED ON THE SPC-15 PERMIT ISSUED BY THE INDIANA DEPARTMENT OF ENVIRONMENTAL MANAGEMENT.
   d. All lots are to be served by 6" diameter sanitary sewer pipe. The sewer lateral terminations are to be indicated on the surface with a suitable marker. The ends are to be plugged and sealed with a water-tight plastic disc or cap. Wyes are to be tilted up 45 degrees from the horizontal and shall conform to A.S.T.M. D-1785, schedule 40, with solvent cement joints meeting A.S.T.M. D-2466.
   e. The sanitary sewer contractor shall be responsible for the leakage outward or inward (exfiltration or infiltration) testing. These tests should not exceed 200 gallons per inch of pipe diameter per mile per day for any section of the system. The exfiltration or infiltration testing shall be performed with a minimum positive head of 2 feet. The air test, if used, shall, as a minimum, conform to the test procedure described in the latest edition of A.S.T.M. C-828. The testing methods selected should take into consideration the range in groundwater elevations projected and the situation during the test. These tests must be observed and certified by a Professional Engineer and sent to the Developer and Stoeppelwerth and Associates.
   f. Deflection tests shall be performed on all P.V.C. or other flexible pipe. The test shall be conducted after the final backfill has been placed at least 30 days. No pipe shall exceed a deflection of 5%. If the deflection test is to be run using a rigid ball or mandrel, it shall have a diameter equal to 95% of the inside diameter of the pipe. The test shall be performed without mechanical pulling devices. It shall be the responsibility of the sanitary sewer contractor to provide all the material, equipment and personnel to complete all of the testing procedures. These tests must be observed & certified by a Professional Engineer and sent to the Developer and Stoeppelwerth and Associates.
   g. All future sewer installation, either connected to or extended from this system shall be constructed in accordance with these specifications. ASTM F 1417-92 standard test method for installation acceptance of plastic gravity sewer line using low-pressure air shall be used for plastic pipe.
   h. No roof drains, footing drains, and/or surface water drains may be connected to the sanitary sewer system, including temporary connections during construction.
   i. Compression joints shall be premolded type, manufactured and installed in accordance with A.S.T.M. C-425 latest revision. All manholes shall be present concrete, constructed in accordance with State of Indiana Specifications. Steps shall conform to A.S.T.M. C-478 latest revision. Covers shall be bolt down Type "A" cast iron ring and cover to conform to A.S.T.M. A-48 latest revision. P.V.C. for gravity sanitary sewer shall conform to A.S.T.M. D-3034 (SDR35). Truss pipe for gravity sanitary sewer shall conform to A.S.T.M. D2680. PVC for forcemain shall conform to ASTM 3-2241 (SDR 21).
   j. Manhole Sections shall be jointed with rubber type o-ring gaskets to meet A.S.T.M. C-443 latest revision.
   k. Where waterlines and sanitary sewers cross a minimum of 18-inches of vertical clearance must be maintained. If the 18-inch vertical clearance cannot be maintained, the sewer must be constructed of waterworks grade ductile iron pipe with mechanical joints within 10 feet of the waterline.
   l. All trenches under a proposed roadway shall be full-depth backfilled with granular material to a point five (5) feet outside of the roadway edge and shall comply with current Hamilton County Specifications.
   m. Sanitary sewers shall be backfilled with sand or suitable material in 4" layers and hand tamped. Remainder of trench shall be filled in 6" layers and solidly tamped to subgrade of base of pavement.?
   n. Pipe Bedding - Bedding classes A, B, or C, as described in A.S.T.M. C12-74 (ANSI A106.2 or WPCF MOP NO. 9 ASCE MOP No. 37) shall be used on all rigid pipe provided the proper strength pipe is used with the specified bedding to support the anticipated load. Bedding classes I, II, or III, as described in A.S.T.M. D2321-74 (ANSI K65.171) shall be used for all flexible pipe provided strength pipe is used with the specified bedding to support the anticipated load.
   o. Design - All materials and construction methods shall be in accordance with the recommended standards for sewage works by the Great Lakes - Upper Mississippi River Board of States Sanitary Engineers.
   p. The Developer shall provide Westfield Utilities and the Indiana Department of Environmental Management with "As Built" drawings of all Sanitary Sewers with services and test results within 30 days of completion.
5. GENERAL NOTES
   a. It shall be the responsibility of the contractors to determine the location of existing underground utilities 24 hours prior to any construction or excavating and maintain operating conditions of active utilities. The engineer shall not be responsible for any damage caused by an erroneous location shown or by the omission of a utility location on these plans. The developer shall be responsible for all approvals, permits & easements.
   b. The contractors shall furnish all bonds necessary to get all permits prior to beginning construction.
   c. All trenches under paved areas shall be backfilled with granular material to conform to current Hamilton County Specifications.
   d. Construction of private driveways is not included in this project.
   e. The contractor shall, at the direction of the developer, endeavor to save and protect trees of value and worth which do not impair construction of improvements as designed. In the event cut or fill exceeds 0.5 foot over the root area, the developer shall be consulted with respect to protective measures to be taken, if any, to preserve such trees.
   f. Remove topsoil to a depth determined by the engineer from all areas to be excavated or filled. Topsoil shall be stored at a location designated by the engineer.
   g. All grading shall be completed to within a tolerance of 0.10 foot of the grades indicated on the plans. The engineer shall be notified when the contractor has reached this point, so that field measurements & spot elevations can be verified by the engineer. The contractor shall not remove his equipment from the site until the engineer has verified that the job meets the above tolerance.
   h. Seeding shall be done in accordance with the erosion control plan included in these plans.
   i. All areas disturbed by any construction shall be restored to its original condition. Excess construction material shall be removed from the project area as directed by the Developer at the Contractors expense. Any construction materials brought onto the project to complete the project shall also be at the contractors expense.
   j. The engineer shall be defined as Stoeppelwerth and Associates, Inc., Consulting Engineers.

FORM\WSTFLD

MANHOLES SHALL BE AIR TESTED IN ACCORDANCE WITH ASTM C1244-93, STANDARD TEST METHOD FOR CONCRETE SEWER MANHOLES BY THE NEGATIVE AIR PRESSURE (VACUUM) TEST.

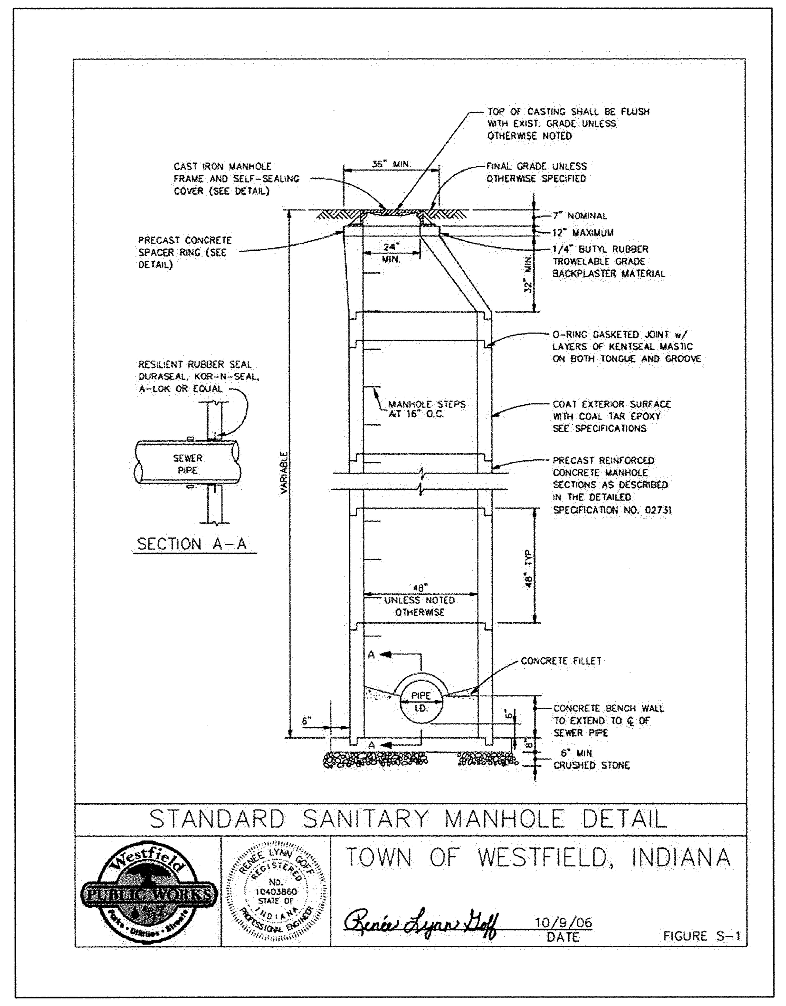


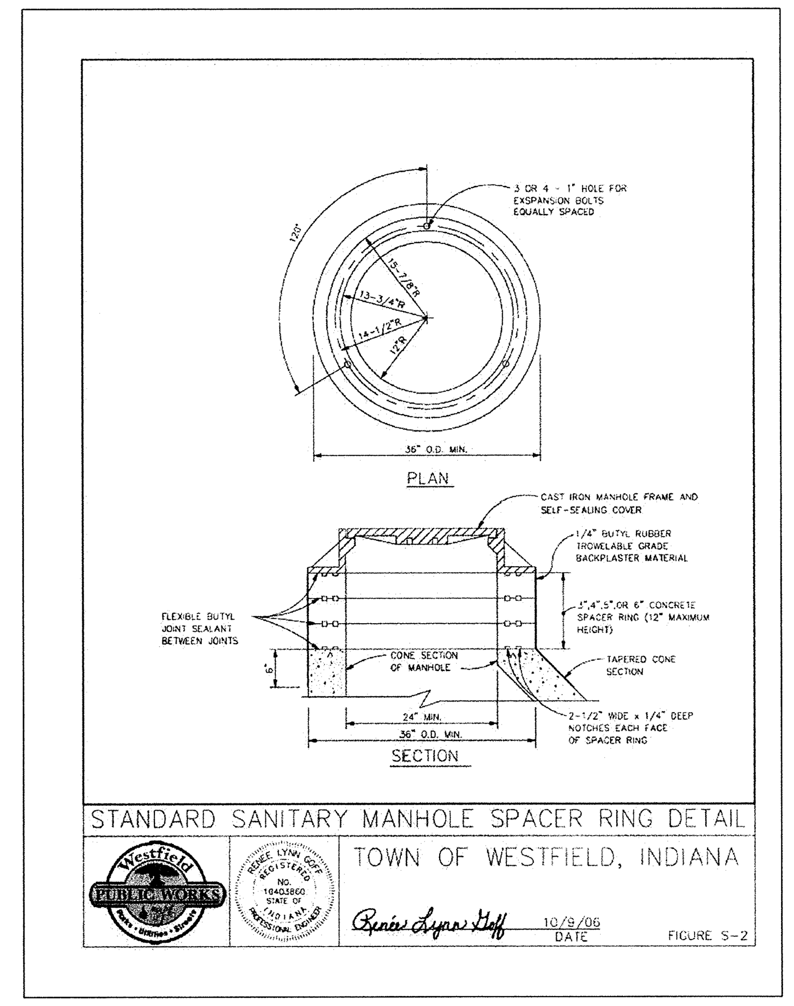


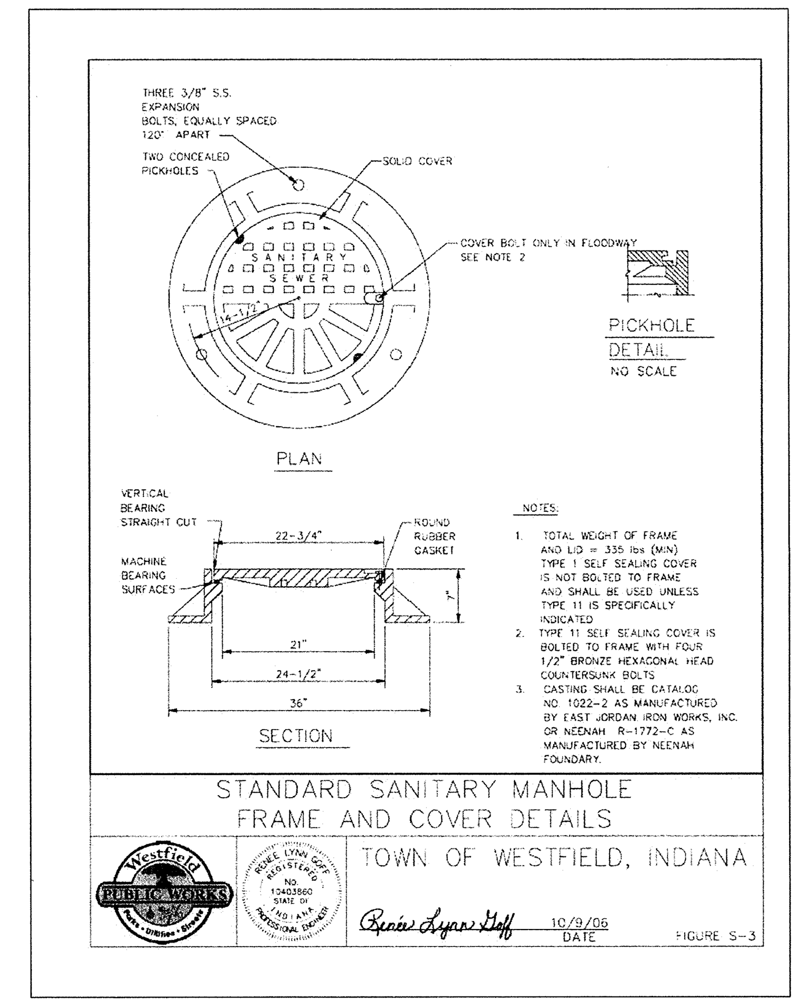


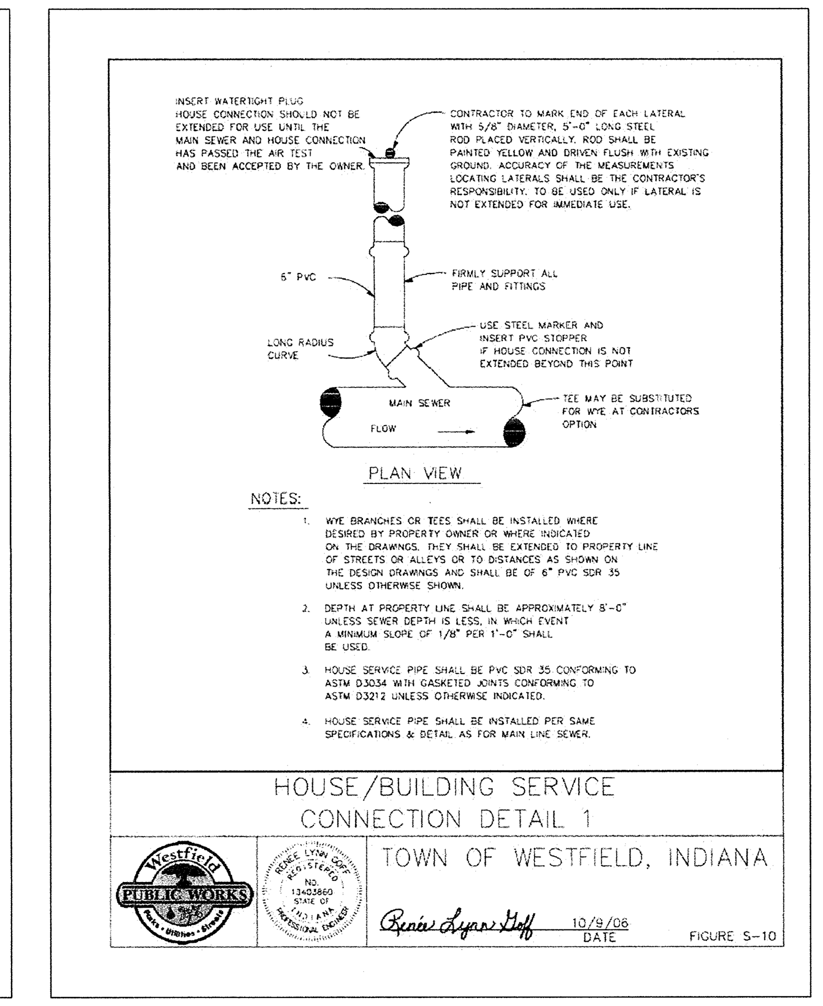


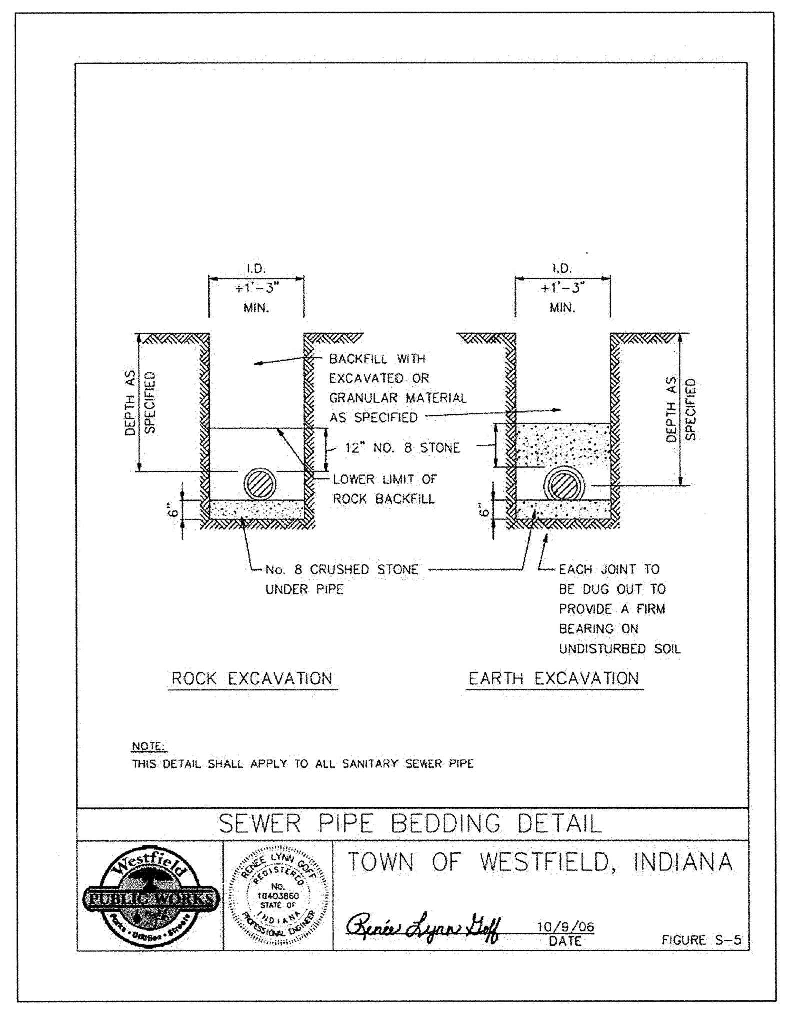


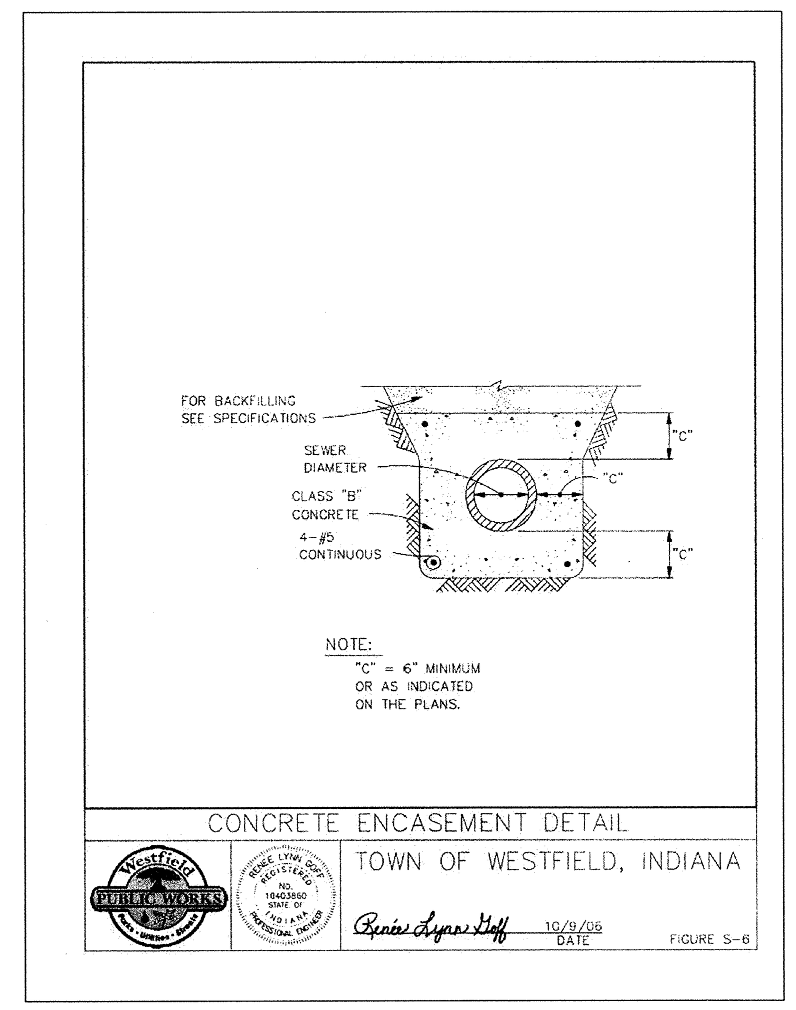


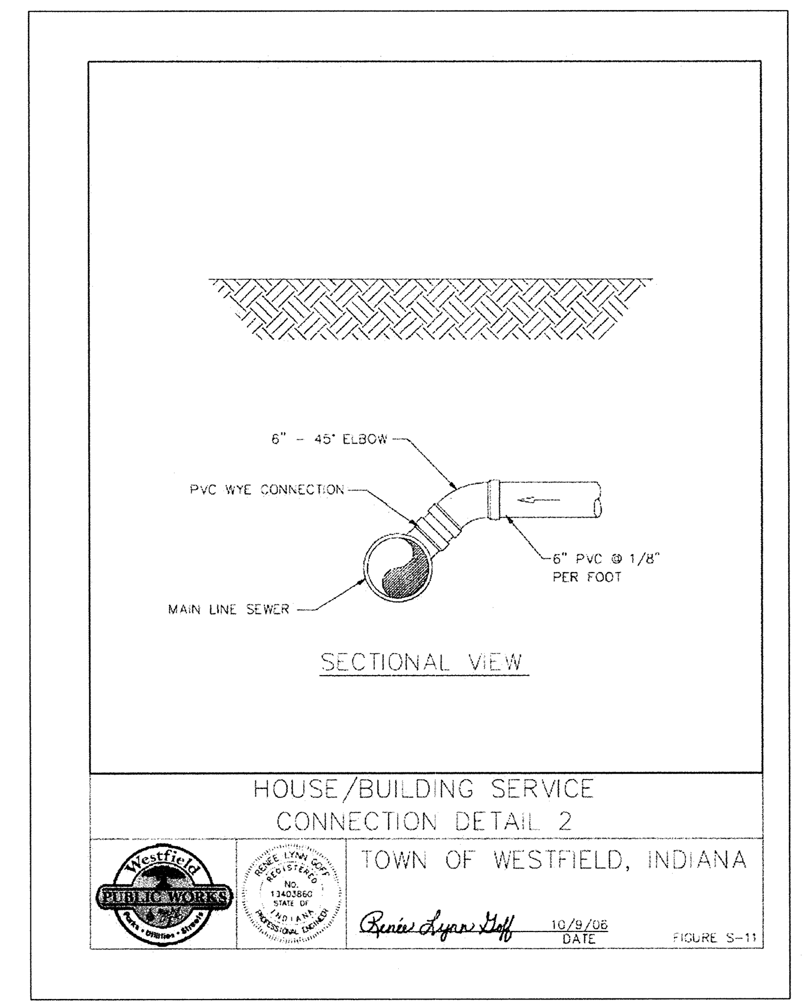


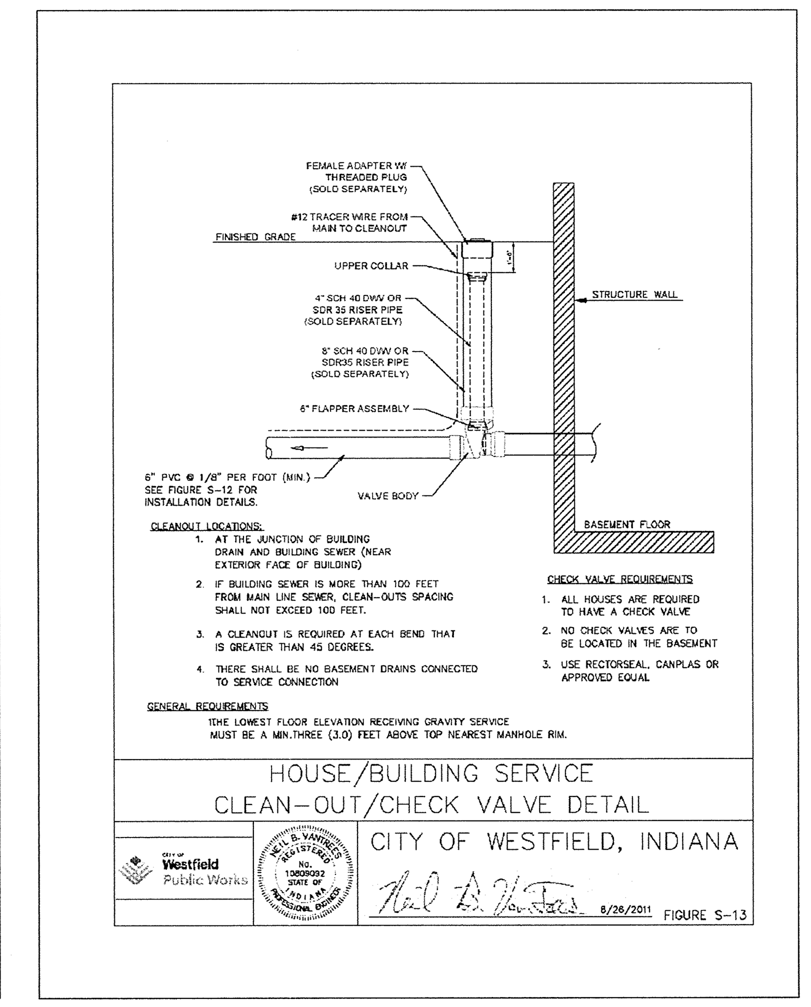


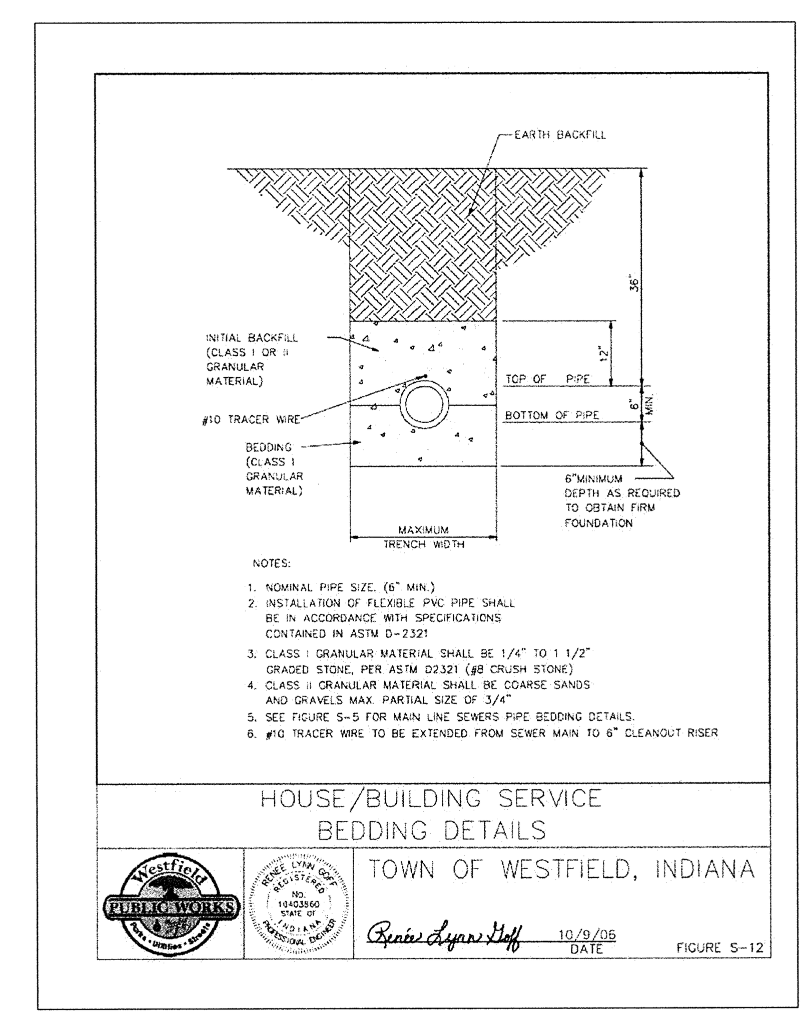


| REVISIONS | | |
|---|---|---|
| DATE | MARK | BY |

DAVID J. STOEPPELWERTH REGISTERED No. 19358 STATE OF INDIANA PROFESSIONAL ENGINEER

THIS DRAWING IS NOT INTENDED TO BE REPRESENTED AS A RETRACEMENT OR ORIGINAL BOUNDARY SURVEY, A ROUTE SURVEY OR A SURVEYOR LOCATION REPORT.

CERTIFIED: 2/1/12


STOEPPELWERTH
ALWAYS ON
7965 East 106th Street, Fishers, IN 46038-2505
phone: 317.849.5935 fax: 317.849.5942


# CONSTRUCTION DETAILS

## BRIDGEWATER APARTMENTS

WESTFIELD HAMILTON COUNTY, INDIANA

DRAWN BY: KRG
CHECKED BY: BKR

SHEET NO. C800

S & A JOB NO. 56030JUSL1

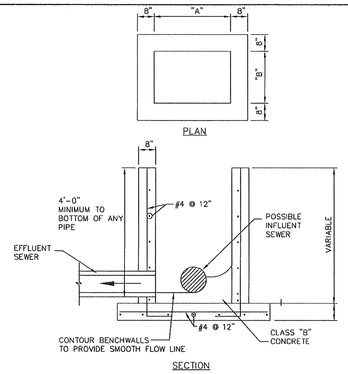


| CAST | "A" | "B" |
|---|---|---|
| TYPE 1 | 36"(0.91m) | 24"(0.61m) |
| TYPE 2 | 24"(0.61m) | 22"(0.56m) |
| TYPE 3 | 22"(0.56m) | 20"(0.51m) |

NOTE:
1. THESE DIMENSIONS ARE ALSO APPLICABLE TO TYPE "CA" CATCH BASINS. (See figure ST-13)
2. PRECAST INLETS AND CATCH BASINS SHALL BE CONSIDERED AN ACCEPTABLE ALTERNATE IF APPROVED BY THE WESTFIELD PUBLIC WORKS DEPARTMENT

INLET STRUCTURE TYPE 1A

TOWN OF WESTFIELD, INDIANA

Renée Lynn Goff 4/10/06 DATE

FIGURE ST-11

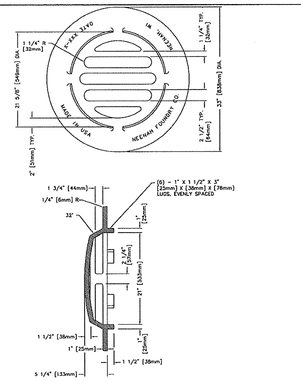


| | |
|---|---|
| NEENAH | R-4342 |
| EAST JORDAN | 6489 |

* OR APROVED BY WESTFIELD PUBLIC WORKS DEPARTMENT
** STORM SEWER CASTINGS MANHOLE COVERS, BEEHIVE INLETS, CURB INLETS OR OTHER APPROVED CASTING SHALL HAVE THE FOLLOWING PHRASES CAST IN RECESSED LETTERS TWO (2) INCHES IN HEIGHT:
A. "STORM SEWER"
B. "DRAINS TO RIVER" OR "DRAINS TO WATERWAY"
C. "DUMP NO WASTE"
D. OTHER PHRASES SHALL REQUIRE APPROVAL OF THE WESTFIELD PUBLIC WORKS DEPARTMENT.

BEEHIVE CURB INLET CASTING

TOWN OF WESTFIELD, INDIANA

Renée Lynn Goff 4/10/06 DATE

FIGURE ST-10

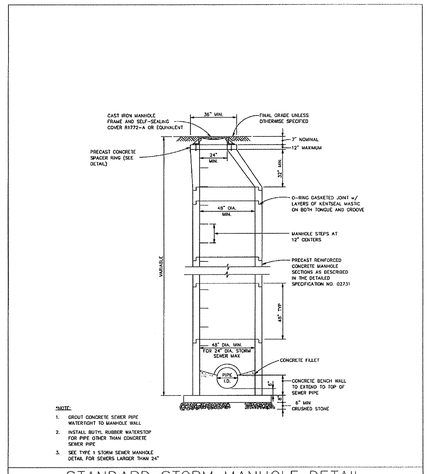


STANDARD STORM MANHOLE DETAIL

TOWN OF WESTFIELD, INDIANA

Renée Lynn Goff 4/10/06 DATE

FIGURE ST-1

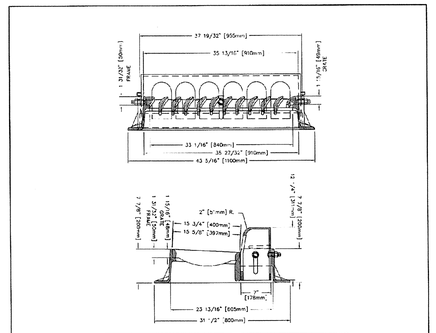


| | |
|---|---|
| NEENAH | R-3287-10V |
| EAST JORDAN | 7505 M1 & T2 |

* OR APROVED BY WESTFIELD PUBLIC WORKS DEPARTMENT
** STORM SEWER CASTINGS MANHOLE COVERS, BEEHIVE INLETS, CURB INLETS OR OTHER APPROVED CASTING SHALL HAVE THE FOLLOWING PHRASES CAST IN RECESSED LETTERS TWO (2) INCHES IN HEIGHT:
A. "STORM SEWER"
B. "DRAINS TO RIVER" OR "DRAINS TO WATERWAY"
C. "DUMP NO WASTE"
D. OTHER PHRASES SHALL REQUIRE APPROVAL OF THE WESTFIELD PUBLIC WORKS DEPARTMENT.

CHAIR BACK CURB INLET CASTING

TOWN OF WESTFIELD, INDIANA

Renée Lynn Goff 4/10/06 DATE

FIGURE ST-8

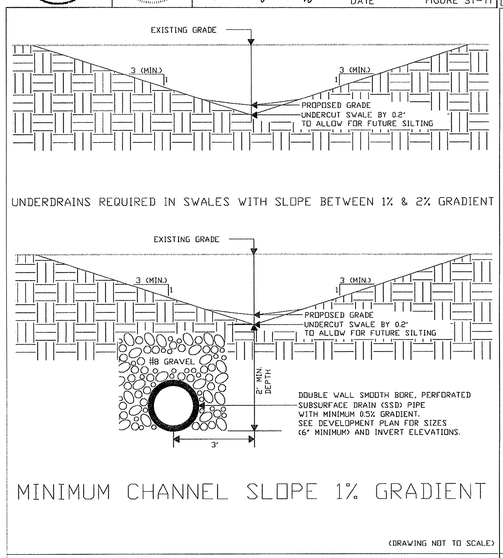


(DRAWING NOT TO SCALE)

TYPICAL SWALE DETAIL

TOWN OF WESTFIELD, INDIANA

Renée Lynn Goff 4/10/06 DATE

FIGURE ST-43

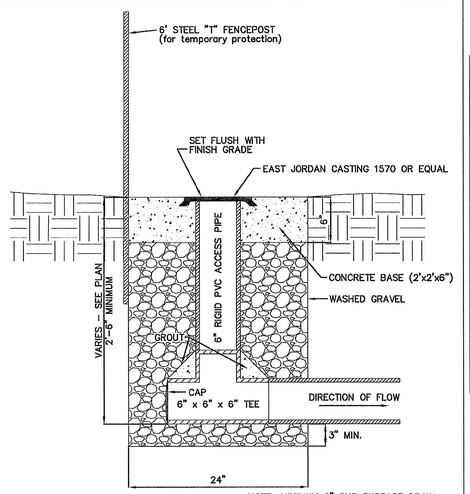


NOTE: MINIMUM 6" SUB SURFACE DRAIN D= PIPE DIAMETER

NOTE: TILE SHALL BE DOUBLE WALL SMOOTH WALL PERFORATED HDPE PIPE.

SUBSURFACE DRAIN (SSD) RISER DETAIL

TOWN OF WESTFIELD, INDIANA

Renée Lynn Goff 4/10/06 DATE

FIGURE ST-37

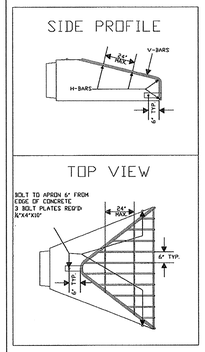


| | Apron Size Inches | V-bar Size Inches | No. of H-bars Req'd | H-bar Size Inches | Bolt Dia. Inches | "A" Dim. Inches |
|---|---|---|---|---|---|---|
| Arch pipe aprons | 18 | 1/2 | 3 | 5/8 | 1/2 | 5 |
| | 24 | 5/8 | 4 | 3/4 | 1/2 | 7 |
| | 30 | 5/8 | 4 | 3/4 | 1/2 | 7 1/2 |
| | 36 | 3/4 | 4 | 1 | 1/2 | 10 1/2 |
| | 42 | 3/4 | 4 | 1 | 3/4 | 11 |
| | 48 | 3/4 | 4 | 1 ½ pipe | 3/4 | 12 |
| | 54 | 3/4 | 4 | 1 ½ pipe | 3/4 | 12 |
| | 60 | 3/4 | 5 | 1 ½ pipe | 3/4 | 14 |
| | 72 | 3/4 | 5 | 1 ½ pipe | 3/4 | 14 |
| | 84 | 3/4 | 6 | 1 ½ pipe | 3/4 | 15 |
| Round pipe aprons | 12 | 1/2 | 3 | 5/8 | 1/2 | 4 |
| | 15 | 1/2 | 3 | 5/8 | 1/2 | 4 1/2 |
| | 18 | 1/2 | 4 | 5/8 | 1/2 | 4 1/2 |
| | 21 | 1/2 | 4 | 5/8 | 1/2 | 5 |
| | 24 | 5/8 | 4 | 3/4 | 1/2 | 5 |
| | 27 | 5/8 | 4 | 3/4 | 1/2 | 5 1/2 |
| | 30 | 5/8 | 4 | 3/4 | 1/2 | 5 1/2 |
| | 36 | 3/4 | 4 | 1 | 3/4 | 8 |
| | 42 | 3/4 | 4 | 1 | 3/4 | 8 |
| | 48 | 3/4 | 5 | 1 | 3/4 | 8 |
| | 54 | 3/4 | 5 | 1 ½ pipe | 3/4 | 8 |
| | 60 | 3/4 | 5 | 1 ½ pipe | 3/4 | 8 |
| | 66 | 3/4 | 6 | 1 ½ pipe | 3/4 | 8 |
| | 72 | 3/4 | 6 | 1 ½ pipe | 3/4 | 9 |
| | 84 | 3/4 | 7 | 1 ½ pipe | 3/4 | 10 |
| | 90 | 3/4 | 7 | 1 ½ pipe | 3/4 | 14 |

NOTES:
1. BARS & PLATES ARE HOT-ROLLED STEEL.
2. BARS, PLATES, & PIPIE ARE FINISHED WITH 2 COATS OF ALUMINUM PAINT.
3. BOLTS ARE GALVINIZED
4. NO REBAR THROUGH PIPES WILL BE ALLOWED
5. DEBRIS GUARD SHALL BE REMOVABLE

(DRAWING NOT TO SCALE)

DEBRIS GUARD

TOWN OF WESTFIELD, INDIANA

Renée Lynn Goff 4/10/06 DATE

FIGURE ST-29

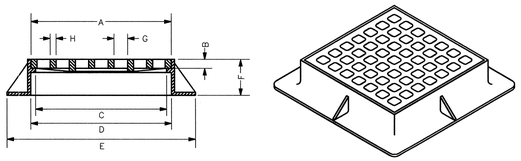


| CATALOG NO. | A | B | C | D | E | F | G | H | WT. LBS. |
|---|---|---|---|---|---|---|---|---|---|
| R-3405 | 23 1/2 X 23 1/2 | 1 1/2 | 22 X 22 | 24 3/4 X 24 3/4 | 32 3/4 X 32 3/4 | 6 | 2 1/8 X 2 1/8 | 1 | 345 |

OPEN PAVEMENT GRATE

NO SCALE

**NOTE:**

**ALL STORM TOP OF CASTINGS STATING "DUMP NO WASTE-DRAINS TO WATERWAY" OR "DUMP NO WASTE-DRAINS TO FRESH WATER"**

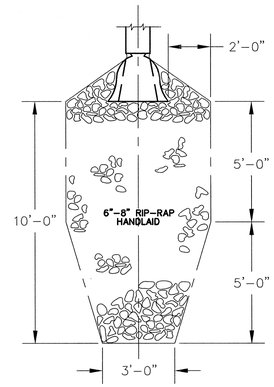


RIP-RAP DETAIL

NOT-TO-SCALE

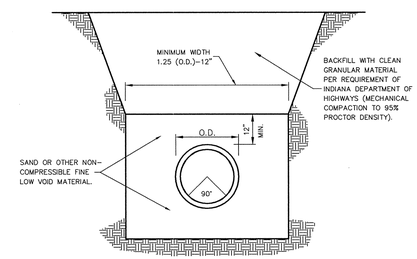


RIGID PIPE BEDDING DETAIL

(CONCRETE PIPE)

NOT-TO-SCALE

| DATE | MARK | REVISIONS | BY |
|---|---|---|---|

DAVID J. STOEPPELWERTH REGISTERED No 19358 STATE OF INDIANA PROFESSIONAL ENGINEER

THIS DRAWING IS NOT INTENDED TO BE REPRESENTED AS A RETRACEMENT OR ORIGINAL BOUNDARY SURVEY, A ROUTE SURVEY OR A SURVEYOR LOCATION REPORT.

CERTIFIED: 2/1/12

David J. Stoeppelwerth


STOEPPELWERTH & ASSOCIATES
ALWAYS ON
7965 East 106th Street, Fishers, IN 46038-2505
phone: 317.849.5935 fax: 317.849.5942


CONSTRUCTION DETIALS

BRIDGEWATER APARTMENTS

HAMILTON COUNTY, INDIANA

WESTFIELD

DRAWN BY: KRG

CHECKED BY: BKR

SHEET NO. C801

S & A JOB NO. 56030JUSL1

S:\56030JUSL1\DWG\C801-STMDTL.dwg, 1/23/2013 2:41:12 PM, KGilson, 1:1

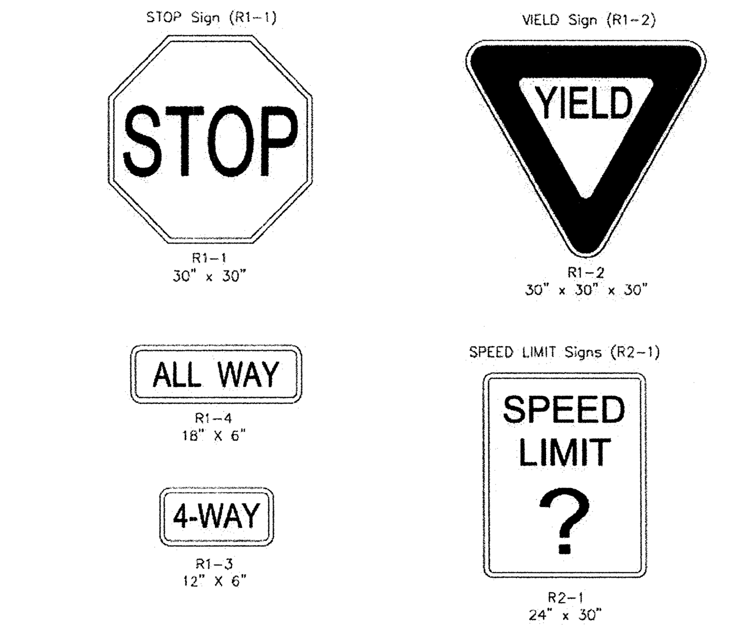


NOTES:

1. SIGNS SHALL BE SINGLE FACED WITH HIGH INTENSITY REFLECTORIZED SHEETING ON 0.080" THICK ALUMINUM SHEET MATERIAL PER INDOT STANDARD SPECIFICATION 912.10.
2. POSTS SHALL BE 11'-0" LONG, 3lb/ft GALVANIZED CHANNEL SIGN POST PER INDOT STANDARD SPECIFICATION 909.14.
3. ALL SIGN SIZES, SHAPES, COLORS AND MATERIAL SHALL MEET THE INDIANA MANUAL ON UNIFORM TRAFFIC CONTROL DEVICES.

TYPICAL SUBDIVISION REGULATORY SIGNS

TOWN OF WESTFIELD, INDIANA

Renée Lynn Goff 10/9/06 DATE FIGURE P-15.1

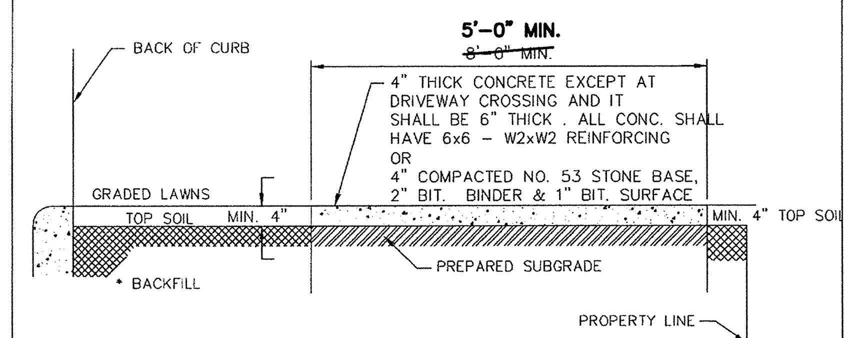


TYPICAL PATH SECTION
NOT TO SCALE

* THE SPACE BEHIND THE CURB SHALL BE FILLED WITH SUITABLE MATERIAL TO THE REQUIRED ELEVATION AND COMPACTED IN LAYERS NOT TO EXCEED 6" IN DEPTH.

SUBGRADE UNDER ALL CURBS, SIDEWALKS, PATHS AND DRIVES SHALL BE COMPACTED IN ACCORDANCE WITH I.N.D.O.T. SPECIFICATIONS.

SEE SECTION 02502 (STANDARDS FOR ROADWAY CONSTRUCTION) FOR DETAILED DISCRIPTION OF BICYCLE/JOGGING PATH CONSTRUCTION

BICYCLE/JOGGING PATH DETAIL

TOWN OF WESTFIELD, INDIANA

Renée Lynn Goff 10/9/06 DATE FIGURE P-16

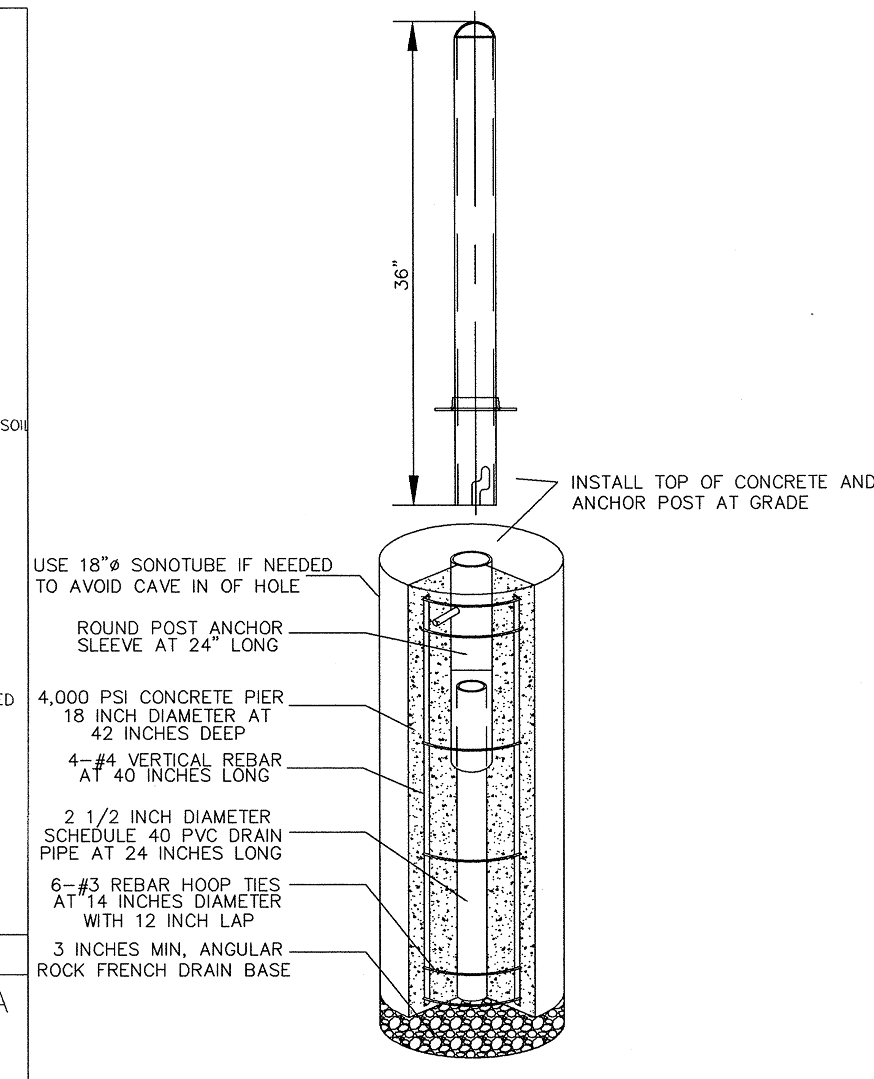


REMOVABLE BOLLARD
NOT-TO-SCALE

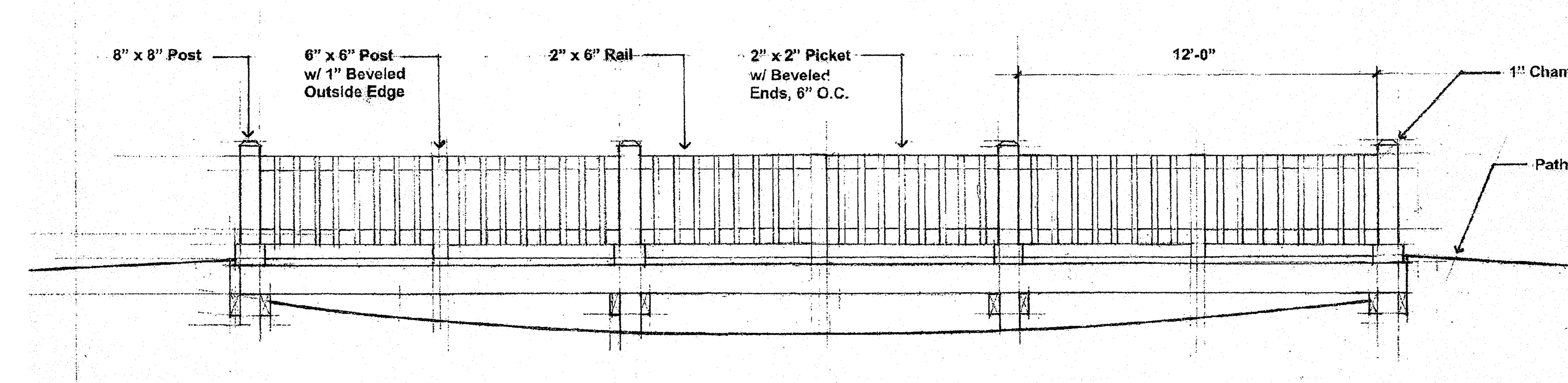


**Boardwalk Elevation**
Scale: 3/8" = 1'-0"

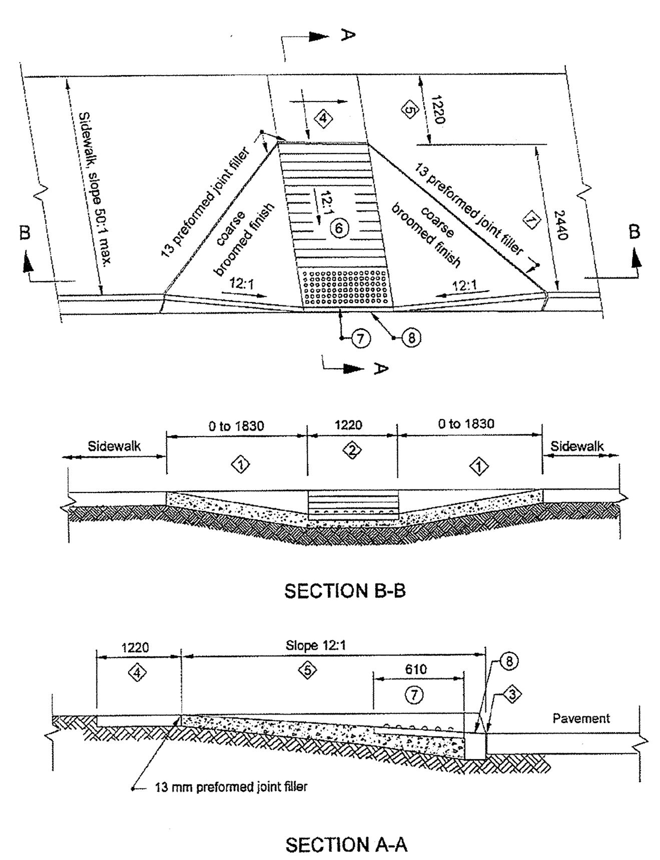


NOTES:

6. See Standard Drawing 604-SWCR-02 for groove details.
7. See Standard Drawing 604-SWCR-02 for details of the detectable warnings.
8. See Standard Drawing 604-SWCR-02 for alternate curb construction.
10. See Standard Drawing 604-SWCR-01 and -02 for Location Plan and General Notes respectively.
11. See Standard Drawing 604-SWCR-02 for typical ramp construction detail.

All Dimension are in mm unless otherwise specfied
INDIANA DEPARTMENT OF TRANSPORTATION
SIDEWALK CURB RAMP TYPE A
SEPTEMBER 2005
STANDARD DRAWING NO. 604-SWCR-03
/s/ Richard L. VanCleave 9-01-05 DESIGN STANDARDS ENGINEER DATE
/s/ Richard K.Smutzer 9-01-05 CHIEF HIGHWAY ENGINEER DATE

GENERAL NOTES :

1. These dimensions are based on a 6 in. curb height. They shall be proportionally adjusted for other curb heights.
2. Where site infeasibility precludes construction to the width shown, such width may be decreased to a minimum of 3'-0.
3. The bottom edge of the curb ramp shall be flush with the edge of adjacent pavement and gutter line.
4. Landing areas at the top of curb ramps shall have maximum cross slope of 50 : 1 in any direction. When site infeasibility precludes a landing slope of 50 : 1 in any direction, the slope perpendicular to the curb face shall not exceed 50 :1.
5. If site infeasibility precludes construction to the width shown, the landing width may be decreased to 3'-0 minimum. The running slope of the curb ramp may be steepened to a maximum of 10 : 1 for a maximum 6 in. rise.
6. Drainage inlets should be located uphill from curb ramps to prevent puddles at the path of travel.
7. See Standard Drawing E 604-SWCR-12 for improved access on narrow sidewalks.
8. Algebraic difference in grade between the base of curb ramp and the gutter shall be limited to less than 11%. If it is not practical, a 2'-0 wide level strip shall be provided. See detail sketch.
9. Minimum recommended width of curb ramp is 4'-0.

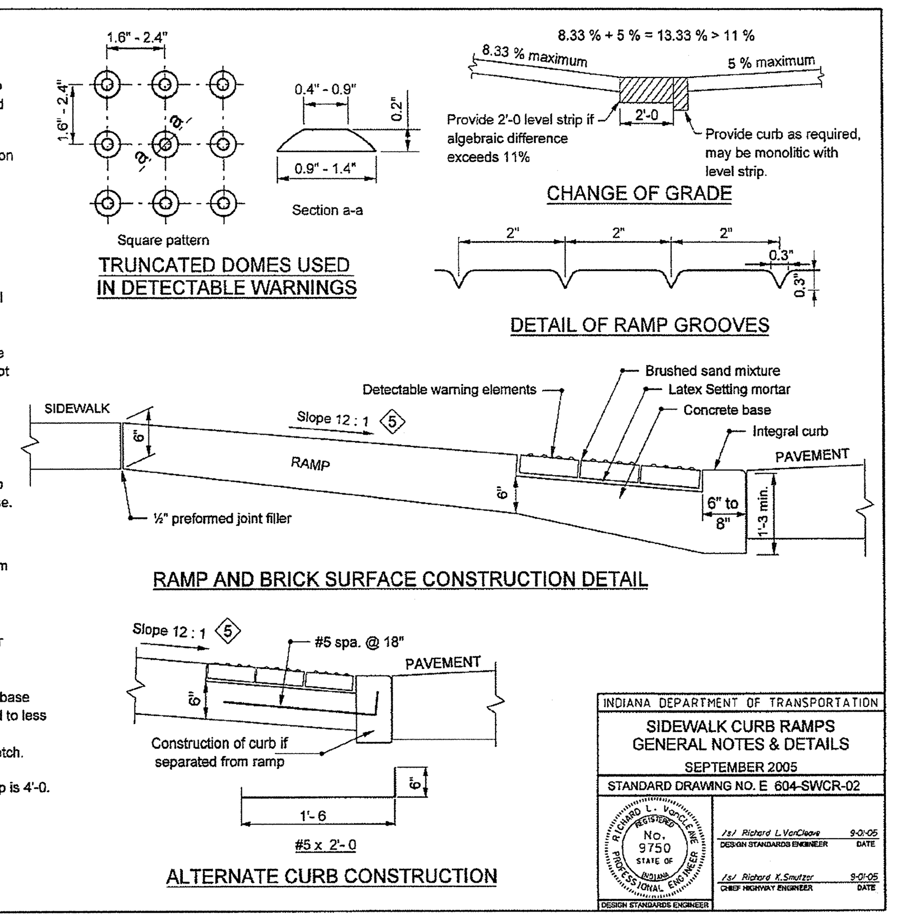


INDIANA DEPARTMENT OF TRANSPORTATION
SIDEWALK CURB RAMPS GENERAL NOTES & DETAILS
SEPTEMBER 2005
STANDARD DRAWING NO. E 604-SWCR-02
/s/ Richard L.VanCleave 9-01-05 DESIGN STANDARDS ENGINEER DATE
/s/ Richard K.Smutzer 9-01-05 CHIEF HIGHWAY ENGINEER DATE

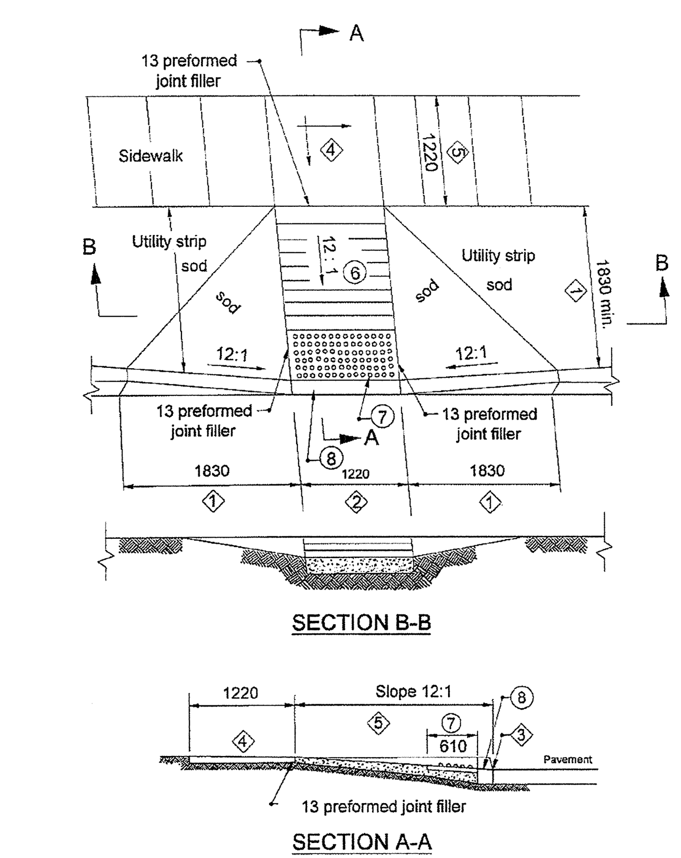


NOTES :

6. See Standard Drawing 604-SWCR-02 for groove details.
7. See Standard Drawing 604-SWCR-02 for details of the detectable warning surface.
8. See Standard Drawing 604-SWCR-02 for alternate curb construction.
9. See Standard Drawing 604-SWCR-02 for typical ramp construction detail.
10. See Standard Drawing 604-SWCR-01 and -02 for Location Plan and General Notes respectively.

All Dimension are in mm unless otherwise specfied
INDIANA DEPARTMENT OF TRANSPORTATION
SIDEWALK CURB RAMPS TYPE C
SEPTEMBER 2005
STANDARD DRAWING NO. 604-SWCR-05
/s/ Richard L VanCleave 9-01-05 DESIGN STANDARDS ENGINEER DATE
/s/ Richard K.Smutzer 9-01-05 CHIEF HIGHWAY ENGINEER DATE

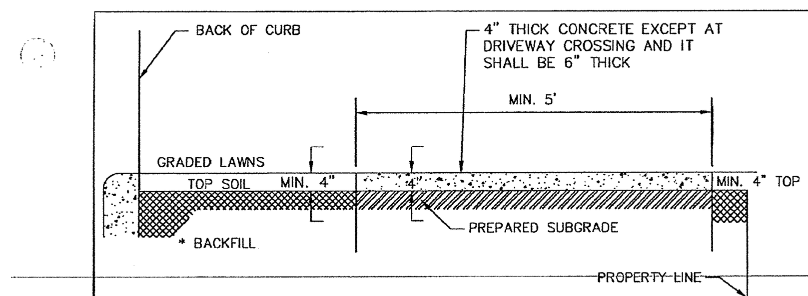


TYPICAL SIDEWALK SECTION
NOT TO SCALE

* THE SPACE BEHIND THE CURB SHALL BE FILLED WITH SUITABLE MATERIAL TO THE REQUIRED ELEVATION AND COMPACTED IN LAYERS NOT TO EXCEED 6" IN DEPTH.

SUBGRADE UNDER ALL CURBS, SIDEWALKS, AND DRIVES SHALL BE COMPACTED IN ACCORDANCE WITH I.N.D.O.T. SPECIFICATIONS.

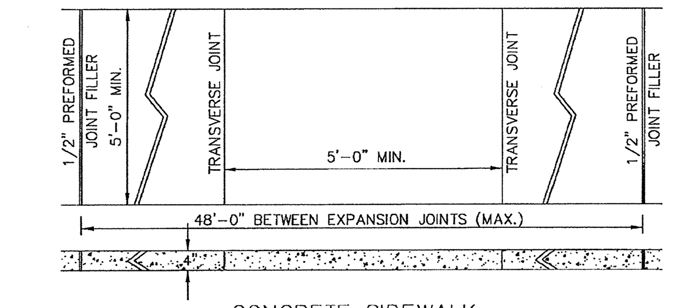


CONCRETE SIDEWALK
NOT TO SCALE

SIDEWALK DETAILS

TOWN OF WESTFIELD, INDIANA

Renée Lynn Goff 10/9/06 DATE FIGURE P-10

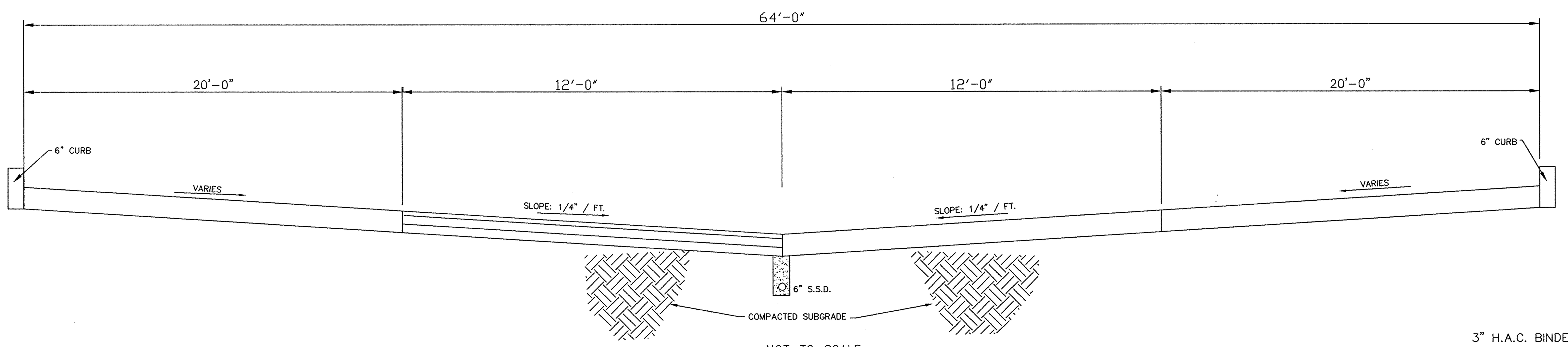


NOT-TO-SCALE
TYPICAL STREET CROSS-SECTION

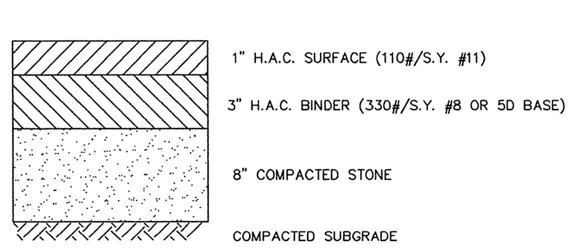


**HEAVY DUTY ASPHALT**
NOT-TO-SCALE

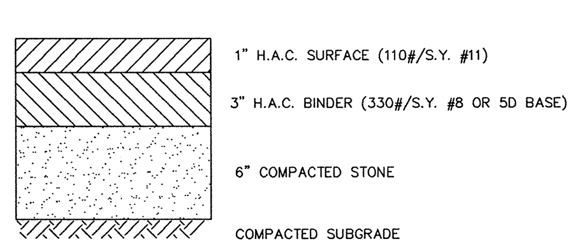


**LIGHT DUTY ASPHALT**
NOT-TO-SCALE

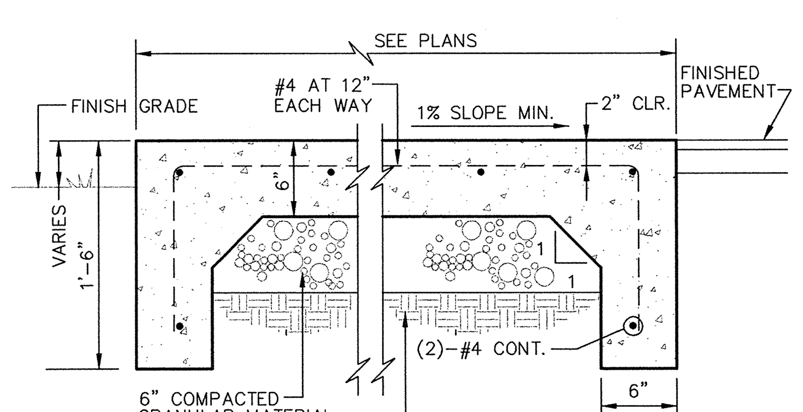


**TRASH COMPACTOR PAD**
NOT-TO-SCALE

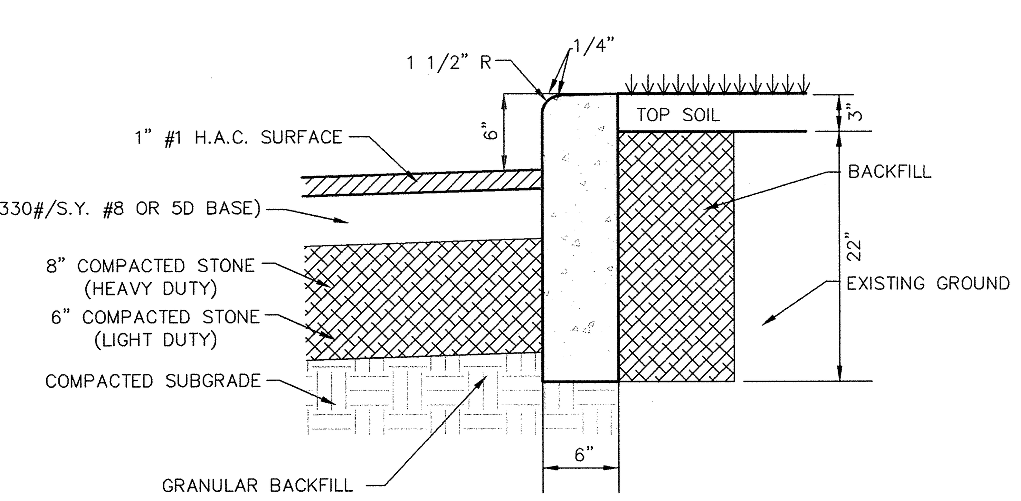


6" VERTICAL CURB
NOT-TO-SCALE

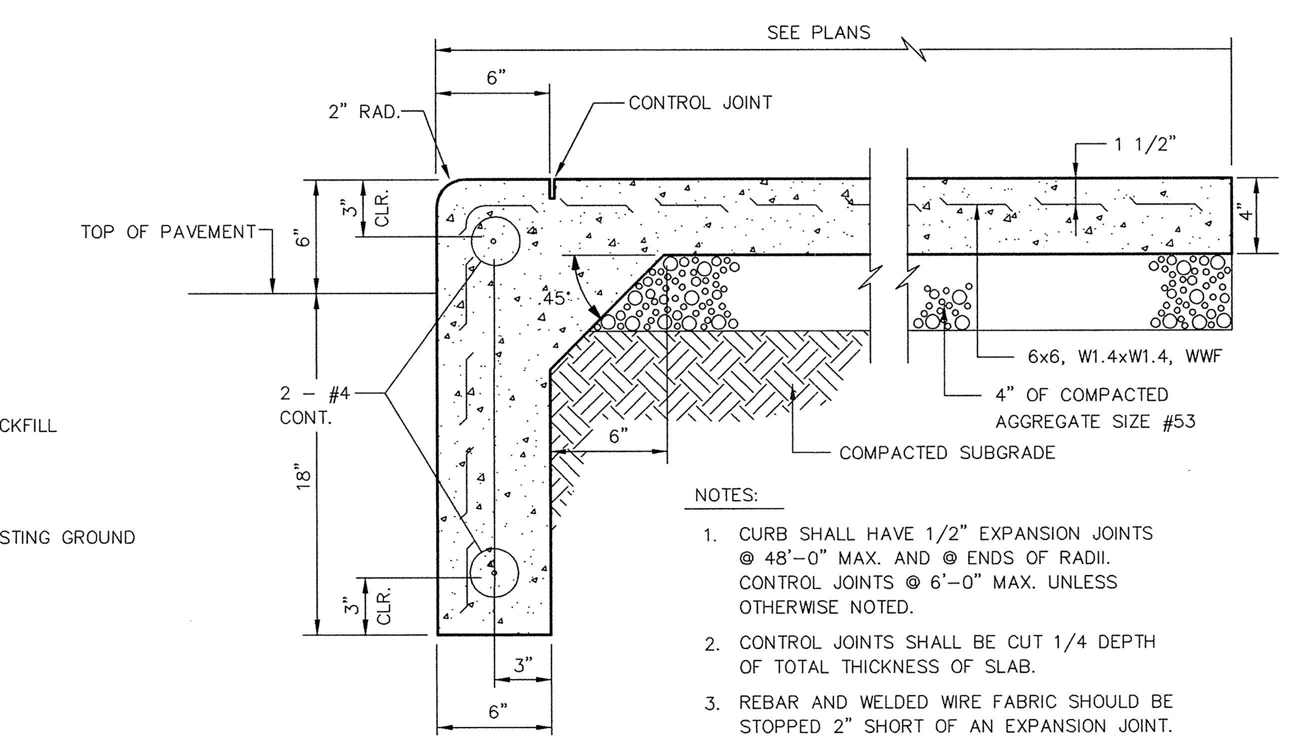


CURB & WALK DETAIL
NO SCALE

NOTES:

1. CURB SHALL HAVE 1/2" EXPANSION JOINTS @ 48'-0" MAX. AND @ ENDS OF RADII. CONTROL JOINTS @ 6'-0" MAX. UNLESS OTHERWISE NOTED.
2. CONTROL JOINTS SHALL BE CUT 1/4 DEPTH OF TOTAL THICKNESS OF SLAB.
3. REBAR AND WELDED WIRE FABRIC SHOULD BE STOPPED 2" SHORT OF AN EXPANSION JOINT.
4. CONTROL JOINTS, EXPANSION JOINTS AND EDGES OF SIDEWALKS SHOULD BE HAND-TOOLED AFTER EACH FINISHING OPERATON.
5. PROVIDE A EXPANSION JOINT AT INTERSECTION WITH ANOTHER SIDEWALK, BETWEEN WALKS AND BUILDINGS AND AT SUCH OTHER POINTS AS INDICATED ON THE DRAWINGS.

| DATE | MARK | REVISIONS | BY |
|---|---|---|---|

DAVID J. STOEPPELWERTH REGISTERED No. 19358 STATE OF INDIANA PROFESSIONAL ENGINEER

THIS DRAWING IS NOT INTENDED TO BE REPRESENTED AS A RETRACEMENT OR ORIGINAL BOUNDARY SURVEY, A ROUTE SURVEY OR A SURVEYOR LOCATION REPORT.

CERTIFIED: 2/1/12

David J. Stoeppelwerth


STOEPPELWERTH
ALWAYS ON
7965 East 106th Street, Fishers, IN 46038-2505
phone: 317.849.5935 fax: 317.849.5942


CONSTRUCTION DETAILS

BRIDGEWATER APARTMENTS

WESTFIELD HAMILTON COUNTY, INDIANA

DRAWN BY: KRG
CHECKED BY: BKR
SHEET NO. C802
S & A JOB NO. 56030JUSL1

S:\56030JUS-L1\DWG\C802-STRT-DTL.dwg, 1/30/2013 11:07:48 AM, KGilson, 1:1

## SECTION 01001 - GENERAL REQUIREMENTS

1.1 DEFINITIONS

A. Whenever used in these specifications the following terms have the meanings indicated which are applicable to both the singular and plural thereof:

1. Town - The Town of Westfield, represented by the Town Council.
2. Westfield Public Works Department – An agency of the Town which manages public infrastructure within its jurisdiction. (WPWD)
3. Developer - Person or firm having control of the development site, and management of the project.
4. Contractor - The person, firm or corporation with whom the developer has entered into an agreement for construction of the project.
5. Project - The total construction of which the work to be provided may be the whole or part.
6. Work - The entire completed construction or the various separately identified parts thereof required to be furnished.

1.2 WORK TO BE PERFORMED

Work to be performed shall be in accordance with drawings and specifications approved by the Town.

1.3 SAFETY AND HEALTH REGULATIONS FOR CONSTRUCTION

The Contractor shall be solely responsible for all obligations prescribed as employer obligations under Chapter XVII of Title 29, Code of Federal Regulations, Part 1926, otherwise known as "Safety and Health Regulations for Construction." All contractors performing work within the Town's jurisdiction must meet with WPWD's Safety Coordinator as part of the required preconstruction conference prior to beginning work.

1.4 DISCOVERY OF HAZARDOUS MATERIAL

If, during the course of installing Town infrastructure, the existence of hazardous material, including asbestos containing material, is observed in the work area, the Contractor shall immediately notify the Developer in writing. The Contractor shall not perform any work pertinent to the hazardous material prior to receipt of



special instructions from the Town of Westfield. Asbestos containing material includes transite pipe.

1.5 EASEMENTS

A. The Developer will obtain utility and/or drainage easements over and through certain private lands for construction. The width or limits of such easements will be defined by the Town, and all permanent and/or temporary easements shall be executed and conveyed to the Town before any construction can commence. If the methods of construction employed by the Contractor are such as to require the use of land beyond the limits obtained, he shall make his own agreements with the property owners affected for the use of such additional land.

B. In all such utility and/or drainage easements, the Contractor shall be required to carefully remove the property owner's fences, or other obstacles to the construction procedure, and replace the same after the work is installed. The backfilling shall be to the grade of the existing ground level or to the grade as established by the property owner in the event the property owner permits the deposit of excess material upon such land.

C. The cost of all such restoration of property shall be borne by the Contractor.

1.6 OPERATIONS WITHIN RIGHT-OF-WAY

In public thoroughfares, all operations of the Contractor, including those of temporary nature, must be confined within the applicable right-of-way limits after having obtained approval of the Town or other Local Governing Entity. If the methods of the construction employed by the Contractor are such as to require the use of land beyond the public thoroughfares, he shall make his own agreements with the property owners affected for the use of such additional.

1.7 PERMITS

A. The Developer will obtain permits which relate to the completed facilities. Permits obtained by the Developer include permits from the following:

1. Town of Westfield
2. Department of Natural Resources
3. U.S. Army Corps of Engineers
4. Indiana Department of Fire Prevention & Building Safety
5. Indiana Department of Transportation
6. Railroads
7. Hamilton County Surveyor's Office



8. Hamilton County Highway Department

B. The Contractor shall obtain permits which relate to construction procedures.

1. All necessary permits or licenses required from the State, County, or Town or other Local Governing Entity in connection with construction procedures under or along existing highways shall be obtained by and at the expense of the Contractor. The construction shall be performed by the Contractor in full accordance with any and all requirements of the State Highway Commission, County Road Commission, WPWD, or other Local Governing Entity including those applying to barricades, watchmen, guarding, lighting, storage of supplies, equipment and excavated materials, method of backfilling, final grading, replacement of pavement or road surface, and all other conditions or requirements which may be stipulated by the State Highway Commission, County Road Commission, or WPWD, whether specifically shown on the drawings or mentioned in the specification.

1.8 MAINTAINING TRAFFIC

A. Before closing any thoroughfare, the Contractor shall notify and, if necessary, obtain a permit or permits from the duly constituted public authority having jurisdiction, state, county, city/town. The contractor will be responsible for notifying the local school corporation, all public safety agencies and the Town. The Contractor shall provide the WPWD a detour route plan for review prior to the road closure.

B. The Contractor shall notify the Town of his intention to close a particular street 72 hours in advance of the proposed closing. The Contractor shall place all proper detour signs and barricades prior to the actual street closing.

C. During the construction, the Contractor shall be responsible for maintaining and protecting the pedestrian and vehicular traffic at all times on all streets involved and providing access to all residential and commercial establishments adjacent to the construction area. The Contractor shall furnish and maintain signage, barricades, flares, etc., in accordance with the latest version of the Indiana Manual on Uniform Traffic Control Devices. The signage, barricades, etc., must be in good condition.

D. The Contractor shall conduct his work in such a manner as not to unduly or unnecessarily restrict or impede normal traffic through the streets of the community. Insofar as it is practicable, do not locate excavated material



and spoil banks in such manner as to obstruct traffic. Keep the traveled way of all street, roads, and alleys clear and unobstructed insofar as is possible. Do not use streets, roads, or alleys for the storage of construction materials, equipment supplies, or excavated earth, except when and where necessary. If required by duly constituted public authority, the Contractor shall, at his own expense, construct bridges or other temporary crossing structures over trenches so as not to unduly restrict traffic. Such structures shall be of adequate strength and proper construction and shall be maintained by the Contractor in such manner as not to constitute an undue traffic hazard. Private driveways shall not be closed, except when and where necessary, and then only upon due advance notice to the WPWD and Homeowner, and for the shortest practicable period of time, consistent with efficient and expeditious construction. The Contractor shall be liable for any damage to persons or property resulting from his work.

E. Streets in which excavation has occurred shall be temporarily restored to receive traffic as soon as possible. Permission to close additional streets shall be denied if, in the opinion of the Town, the restoration on streets where excavation has occurred has not progressed satisfactorily.

1.9 WALKS AND PASSAGEWAYS

The Contractor, when required, shall make provisions at cross streets for the free passage of vehicles and foot passengers, either by bridging or otherwise. Do not obstruct the sidewalks, gutters, or streets, or prevent in any manner the flow of water in streets. Use all proper and necessary means to permit the free passage of surface water along the gutters. The Contractor shall immediately remove all matter, exercising such precaution as may be directed by the Town. All material excavated shall be so disposed of as to inconvenience the public and adjacent tenants as little as possible and to prevent injury to trees, sidewalks, fences, and adjacent property of all kinds. The Contractor may be required to erect suitable barriers to prevent such inconvenience or injury.

1.10 WARNING LIGHTS AND ARROW BOARDS

The Contractor shall place sufficient warning lights and arrow boards on or near the work and keep them illuminated during periods of construction and reduced visibility (from twilight in the evening until sunrise) and shall be held responsible for any damages that any party or the Developer may sustain in consequences of neglecting the necessary precaution in prosecuting this work.

1.11 UTILITIES

A. Temporary Removal: All existing Town utility systems which conflict with the construction of the work herein which can be temporarily



removed and replaced shall be accomplished at the expense of the Developer with approval from the WPWD. Work shall be done by the WPWD unless the WPWD approves, in writing, that the work may be done by the Developer or Contractor.

B. Permanent Relocation of Utilities: Water mains, storm sewer, gas lines, wire lines, service connections, water and gas meter boxes, water and gas valve boxes, light and traffic standards, cable ways, signals, and other utility appurtenances located in the public right-of-way which would permanently interfere with the proposed improvements will be moved by the utility involved and paid for by the Developer.

1.12 SUBMITTALS - CERTIFICATE OF COMPLIANCE

The Developer shall upon request of the Town Council or the WPWD, submit to the WPWD a Certificate of Compliance from the manufacturer and/or supplier of each and every specified material or manufactured equipment item. The Certificate shall state that the material or the item of equipment to be furnished has been manufactured with materials in accordance with the applicable sections of all required codes, specifications, and standards as required by the specifications.

1.13 MANUFACTURER'S SERVICE TIME

A. When a lift station or other equipment is to be furnished by the Developer or Contractor and maintained in the future by the WPWD, service by the manufacturer is required to be furnished as part of the work and shall be at the Contractor's expense.

B. The service provided shall be by a qualified representative to check the completed installation, place the equipment in operation, and instruct the Town's operators in the operation and maintenance procedures.

C. The services shall further demonstrate to the Town's complete satisfaction that the equipment will satisfactorily perform the functions for which it has been installed.



1.14 DIGITAL AS-BUILTS/RECORD DRAWINGS

The Developer will be responsible for preparation and submittal of digital as-builts/record drawings as required by the requirements set forth in the Town's Digital As-built requirements. A copy of the most recent requirements are available on the Town's website at http://www.westfield.in.gov/egov/docs/1157135335_990447.pdf. Additional information can also be received from the WPWD GIS Division.

END OF SECTION 01001

## SECTION 02222 - EARTHWORK FOR UTILITIES

PART 1 - GENERAL

1.1 DESCRIPTION

A. Scope: Specifications for the stripping of topsoil and vegetation, excavation, trenching, bedding, filling, backfilling, compaction, and related work in connection with the installation of water mains, gravity sanitary sewers, storm sewers, and force mains are included in this Section.

B. Definitions

1. Excavation: Removal of earth and rock to form a trench for the installation of a water main, gravity sanitary sewer, storm sewer, or force main.
2. Earth: Unconsolidated material in the crust of the Earth derived by weathering and erosion. Earth includes:
   a. Materials of both inorganic and organic origin;
   b. Boulders less than 1/3 cubic yard in volume, gravel, sand, silt, and clay;
   c. Materials which can be excavated with a backhoe, trenching machine, drag line, clam shell, bulldozer, highlift, or similar excavating equipment without the use of explosives, rock rippers, rock hammers, or jack hammers.
3. Rock: A natural aggregate of mineral particles connected by strong and permanent cohesive forces. Rock includes:
   a. Limestone, sandstone, dolomite, granite, marble, and lava;
   b. Boulders 1/3 cubic yard or more in volume;
   c. Materials which cannot be excavated by equipment which is used to remove earth overburden without the use of explosives, rock rippers, rock hammers, or jack hammers;
   d. Materials which cannot be excavated with a backhoe, trenching machine, drag line, clam shell, bulldozer, high-lift, or similar excavating equipment without the use of explosives, rock rippers, rock hammers, or jack hammers.
4. Undercutting: Excavation of rock and unsuitable earth below the bottom of the pipe or conduit to be installed in the trench.
5. Subgrade: Undisturbed bottom of a trench.
6. Bedding: Earth placed in trench to support pipe and conduit.



7. Backfill and Fill: Earth placed in trench from the top of bedding to finished grade, or to subbase of pavement.
8. Topsoil: Earth containing sufficient organic materials to support the growth of grass.

1.2 SITE CONDITIONS

Existing storm sewers, sanitary sewers, water mains, gas mains, electric ducts, fiber optic ducts, telephone ducts, steam mains and other under-ground structures, lines, and their house connections are to been shown on the plans according to the best available information. The exact location and protection of these facilities and structures, their support and maintenance in operation during construction (in cooperation with the proper authorities), is the responsibility of the Contractor.

PART 2 - PRODUCTS

2.1 BEDDING

A. Class I bedding shall be angular 6 to 12 mm (1/4 to 1/2 inch) graded stone, coral, crushed stone or crushed shells.

B. Class II bedding shall be coarse sands and gravels with maximum particle size of 20 mm (3/4 inch). Class II bedding includes variously graded sands and gravels containing small percentage of fines generally granular and non-cohesive, either wet or dry. Soil types GW (well-graded gravel), SW (well-graded sand), and SP (pea gravel and/or crushed stone mixed with sand) are included in this class.

2.2 BACKFILL

A. General: Backfill shall be earth of such gradation and moisture content that the soil will compact to the specified density and remain stable. Unsuitable materials shall not be used.

B. Cover Material: Pipe cover material shall consist of durable particles ranging in size from fine to coarse (No. 200 to 1 inch) in size in a substantially uniform combination. Unwashed bank run sand and crushed bank-run gravel will be considered generally acceptable. Bedding material may be used for cover material.



C. Granular Backfill - Special Backfill: Granular backfill, when indicated on the plans or as ordered by the Engineer, shall be used for backfilling providing it meets the following soils classified by the Unified Soils Classification System ASTM D-2487 or the Indiana State Highway Standard Specification Section 211 - Special Fill and Backfill ("B" Borrow).

| Group Symbols | Typical Names |
|---|---|
| GW | Well-graded gravels and gravel-sand mixtures, little or no fines |
| GP | Poorly graded gravels and gravel-sand mixtures, little or no fines |
| SW | Well-graded sands and gravelly sands, little or no fines |
| SP | Poorly graded sands and gravelly sands, little or no fines |

D. Suitable Excavated Materials as Backfill: Excavated material shall be used when earth backfill is specified on the plans or where granular backfill or flowable fill is not specifically specified, provided that such material consists of loam, clay, or other materials which, are suitable for backfilling. Unsuitable backfill or frozen backfill material shall not be used. Suitable backfill shall be the following soils, classified by the Unified Soil Classification System, ASTM D-2487:

| Group Symbols | Typical Names |
|---|---|
| GW | Well-graded gravels and gravel-sand mixtures, little or no fines |
| GP | Poorly graded gravels and gravel-sand mixtures, little or no fines |
| GM | Silty gravels, gravel-sand-silt mixtures |
| GC | Clayey gravels, gravel-sand-clay mixtures |
| SW | Well-graded sands and gravelly sands, little or no fines |
| SP | Poorly graded sands and gravelly sands, little or no fines |
| SM | Silty sands, sand-silt mixtures |
| SC | Clayey sands, sand-clay mixtures |



| Group Symbols | Typical Names |
|---|---|
| ML | Inorganic silts, very fine sands, rock flour, silty or clayey fine sands |
| CL | Inorganic clays of low to medium plasticity, gravelly clays, sandy clays, silty clays, lean clays |

E. Unsuitable Materials: Materials which are unsuitable for backfill include stones greater than 8 inches in their largest dimension, pavement, rubbish, debris, wood, metal, plastic, and the following soils, classified by the Unified Soil Classification System, ASTM D-2487:

| Group Symbols | Typical Names |
|---|---|
| OL | Organic silts and organic silty clays of low plasticity |
| MH | Inorganic silts, micaceous or diatomaceous fine sands or silts, elastic silts |
| CH | Inorganic clays of high plasticity, fat clays |
| OH | Organic clays of medium to high plasticity |
| PT | Peat, muck, and other highly organic soils |

F. Concrete Backfill: Concrete used for backfill around sewers, water mains, or other utility piping shall be Class B concrete.

G. Cellular Concrete: Light weight cellular concrete may be used for filling of abandoned sewers as a grouting mixture for filling voids and as a substitute for backfill concrete in tunnels or casing pipes. The cellular concrete shall be produced by blending preformed foam with cement-sand grout slurry to produce a concrete having a fresh weight per cubic foot of not less than 75 pounds.

H. Flowable Fill

1. Flowable fill shall be in accordance with INDOTSS Section 213 and as specified herein.
   a. Unconfined Compressive Strength (28 day): 50-150 psi
   b. Flow Test - Diameter of Spread: 8 inches ± 1 inch
2. Design: Mix design shall be required to be submitted and approved by the WPWD or designated engineer. A trial batch



demonstration may be required. The mix design shall include a list of all ingredients, the source of all materials, the gradation of all aggregates, the names of all admixtures and dosage rates, and the batch weights. Except for adjustments to compensate for routine moisture fluctuations, minor mix design changes after the trial batch verification shall be documented and justified prior to implementation by the Contractor. A change in the source of materials or addition or deletion of admixtures or cementitious materials will require the mix design to be re-submitted for approval. The Contractor shall be required to provide test data from a laboratory which shows that the proposed mix design is in accordance with the requirements listed in this specification.

PART 3 - EXECUTION

3.1 EXISTING UTILITIES, STRUCTURES, AND PROPERTY

A. All poles, fences, sewer, fiber optic, gas, water or other pipes, wires, conduits and manholes, railroad tracks, buildings, structures and property along the routes of water mains, force mains, and sewers shall be supported and protected from damage by the Contractor.

B. Movable items such as mail boxes may be temporarily relocated during construction. Place movable items in their original location immediately after backfilling is completed, unless otherwise shown on the drawings. Replace movable items which are damaged during construction.

C. The Contractor shall proceed with caution in the excavation and preparation of trenches so that the exact location of underground utilities and structures, both known and unknown, may be determined. The Contractor shall be responsible for the repair of utilities and structures when broken or otherwise damaged.

D. Whenever, in the opinion of the WPWD, it is necessary to explore and excavate to determine the location of underground structures, the Contractor shall make explorations and excavations for such purpose.

E. Wherever sewer, gas, water, or other pipes or conduits cross the trench, the Contractor shall support said pipes and conduits without damage to them. The manner of supporting such pipes, etc., shall be subject to the approval of the owner of the utility involved.

F. When utility lines that have to be removed or relocated are encountered within the areas of operations, the Contractor shall notify the WPWD or



the owner of that utility in ample time for the necessary measure to be taken to prevent interruption of the service.

G. The Contractor shall so conduct the work that no equipment, material, or debris will be placed or allowed to fall upon private property in the vicinity of the work unless he shall have first obtained the property owner's written consent thereto and shall have shown said written consent to the Town.

H. All excavated material shall be piled in a manner that will avoid obstructing sidewalks and driveways. Hydrants under pressure, valve pit covers, valve boxes, curb stop boxes, fire and police call boxes, or other utility controls shall be left unobstructed and accessible until the work is completed. Gutters shall be kept clear or other satisfactory provisions made for street drainage, and natural watercourses shall not be obstructed.

I. All streets, alleys, pavements, parkways, and private property shall be thoroughly cleaned of all surplus materials, earth, and rubbish placed thereon by the Contractor.

3.2 CLEARING

A. Clear and remove logs, stumps, brush, vegetation, rubbish, and other perishable matter from the project site as required to perform work.

B. Do not remove or damage trees that do not interfere with the work. Completely remove trees required to be removed, including stumps and roots. Properly treat damaged trees which can be saved.

C. Debris from the tree removal, including trunk, branches, leaves, roots and stumps, shall not be buried or burned on the job site, but must be completely hauled away and disposed of at the Contractor's expense.

D. Clear and remove trees, logs, stumps, brush, vegetation, rubbish, and other perishable matter from the existing and proposed right of way.

3.3 STRIPPING AND STOCKPILING OF TOPSOIL

A. Strip topsoil and vegetation from the excavated areas. Clean topsoil may be stockpiled for reuse as the upper 6 inches of the areas to be seeded.



3.4 PAVEMENT AND WALK REMOVAL

A. Remove existing pavement and walks from the excavated areas. Remove excavated asphaltic and concrete materials from the job site as these materials are excavated.

B. The width of pavement removed along the normal trench for the installation of pipe and structures shall not be less than two (2) feet on either side of the trench and be in accordance with Standard Detail P-18. Remove all existing pavement when the excavation requires the removal of 75% or more of the total existing pavement width. If over 50% of one travel lane is disturbed, restoration must be extended to the centerline of the roadway..

C. Remove walks completely when excavation is along the length of a walk and requires the removal of part of the walk. Remove walks to existing joints in the walks when excavation crosses walks. If there are no joints in an existing walk, the width of walk removed shall not exceed the width of the trench by more than 12 inches on each side of the trench.

D. Use methods to remove pavement and walks that will assure the breaking or cutting of pavement and walks along straight lines. The face of the remaining pavement and walk surfaces shall be approximately vertical.

E. All concrete sidewalk and asphalt multiuse path removed must be replaced per the WPWD Standards Section 02500 and Standard Details P-10, P-11, and P-16. All restoration work is subject to inspection by WPWD.

3.5 EXCAVATING

A. General: After stripping of topsoil and vegetation, perform excavations of every description regardless of material encountered within the grading limits of the project to lines and grades as indicated on the drawings or as otherwise specified.

1. Materials removed below the depths indicated shall be replaced to the indicated excavation grade with satisfactory bedding materials placed and compacted. The Contractor will minimize over excavation.

B. Dewatering: Keep excavations free from water until the water mains, force mains, sewers, structures, and appurtenances to be constructed in the excavations are completed and will safely withstand forces from water. Provide sufficient dewatering equipment and make satisfactory arrangements for the disposal of the water without undue interference with other work, damage to property, or damage to the environment.



1. Operate dewatering equipment ahead of pipe laying and keep the water level below the pipe invert until the pipe is secured by backfill.

C. Trenching: Trees, boulders, and other surface encumbrances, located so as to create a hazard to employees involved in excavation work or in the vicinity thereof at any time during operations, shall be removed or made safe before excavating is begun.

1. Do not open more than 100 feet of trench in advance of the installed pipe, unless otherwise directed or permitted by the WPWD or designee. Excavate the trench within 6 inches of full depth for a distance of at least 30 feet in advance of the pipe laying, unless otherwise directed or permitted.
2. Contractor shall be responsible for the determination of the angle of repose of the soil in which the trenching is to be done. Excavate all slopes to at least the angle of repose except for areas where solid rock allows for line drilling or presplitting, or where shoring or trench box is to be used.
3. Sides, slopes, and faces of all excavations shall meet accepted engineering requirements by scaling, benching, barricading, rock bolting, wire meshing, or other equally effective means. Give special attention to slopes which may be adversely affected by weather or moisture content.
4. Flatten the trench sides when an excavation has water conditions, silty materials, loose boulders, and areas where erosion, deep frost action, and slide planes appear.
5. Shoring, sheeting, trench box, or other means shall be used to support sides of trenches in hard or compact soil when the trench is more than 5 feet in depth and 8 feet or more in length. Sides of trenches shall include embankments adjacent to trenches. In lieu of shoring, the sides of the trench above the 5-foot level may be sloped to preclude collapse, but shall not be steeper than a 1-foot rise to each 1/2-foot horizontal. Provide a bench of 4 feet minimum at the toe of the sloped portion of the trench wall when the outside diameter of the pipe to be installed is greater than 6 feet.
6. Use diversion ditches, dikes, or other suitable means to prevent surface water from entering an excavation and to provide adequate drainage of the area adjacent to the excavation. Do not allow water to accumulate in an excavation. If possible, the grade should be away from the excavation.
7. Excavations shall be inspected by a competent Contractor's representative after every rainstorm or other hazard-increasing



occurrence, and the protection against slides and cave-ins shall be increased, if necessary.
8. Do not store excavated or other material nearer than 4 feet from the edge of any excavation. Store and retain materials as to prevent materials from falling or sliding back into the excavation. Install substantial stop log or barricades when mobile equipment is utilized or allowed adjacent to excavations.
9. The width of trenches in earth for water main pipe, sewers, basin connections, house connections, and other drains up to and including 33 inches in internal diameter shall provide a clearance of not less than 8 inches or more than 10 inches on each side of the pipe. Trenches for pipe larger than 33 inches in internal diameter shall provide a clearance of not less than 10 inches or more than 14 inches on each side of the pipe.
10. The maximum clear width of trenches in earth for manholes shall be the greatest external width of the structure plus the space necessary for the construction and removal of the forms and construction of masonry work.
11. The design of the water main, force main, and/or sewer pipe and structures is predicated upon the width of trench specified in this Article. The Contractor shall be responsible for the provision and installation, at his own expense, of such remedial measures as may be directed by the WPWDor designee; should the trench width limits specified in this Article be exceeded.
12. Test the air in excavations in locations where oxygen deficiency or gaseous conditions are possible. Establish controls to assure acceptable atmospheric conditions. Provide adequate ventilation and eliminate sources of ignition when flammable gases are present. Attended emergency rescue equipment, such as breathing apparatus, a safety harness and line, and basket stretcher, shall be readily available where adverse atmospheric conditions may exist or develop in an excavation.
13. Provide walkways or bridges with guardrails where employees or equipment are required or permitted to cross over excavations.
14. Provide ladders where employees are required to be in trenches 4 feet deep or more. Ladders shall extend from the floor of the trench to at least 3 feet above the top of the excavation. Locate ladders to provide means of exit without more than 25 feet of lateral travel.
15. Provide adequate barriers and physically protect all remotely located excavations. Barricade or cover all wells, pits, shafts, and similar excavations. Backfill temporary wells, pits, shafts, and similar excavations upon completion of exploration and similar operations.



D. Quicksand: Carry on the work with utmost vigor and proceed with the work expeditiously when running sand, quicksand, or other bad or treacherous ground is encountered. Install bedding to support the pipe as directed.

E. Blasting: Removal of rock from the excavation may be facilitated by the use of controlled explosives.

1. Blasting supervision and Blasting Monitoring and Control Programs shall meet the requirements of this Section.
2. Storage procedures for explosives shall be developed by the Contractor and submitted to the Engineer before explosives are brought to the job site.

3.6 SHEETING

A. The Contractor shall be responsible for construction means, methods, techniques, and procedures, and for providing a safe place for the performance of the work by the Contractor, Subcontractors, suppliers and their employees, and for access use, work, or occupancy by all authorized persons.

B. The Contractor shall be solely responsible for all obligations prescribed as employer obligations under Chapter XVII of Title 29, Code of Federal Regulations, Part 1926, otherwise known as "Safety and Health Regulations for Construction."

C. Adequate supporting systems, such as sheeting, shoring, piling, cribbing, and bracing shall be furnished and installed by the Contractor as required to protect existing buildings, utilities, and property from damage during the progress of the work.

3.7 STORAGE AND REMOVAL OF EXCAVATED MATERIAL

A. Suitable excavated material required for filling and backfilling operations may be stockpiled in on-site locations, at the discretion of the WPWD or designee, until the material is ready to be placed.

B. Remove unsuitable materials from the job site as unsuitable materials are excavated. Remove surplus suitable materials from the job site as trenches are backfilled.



3.8 TEMPORARY PLUGS

Prevent foreign matter from entering pipe while it is being installed. Do not place debris, tools, clothing, or other material in the pipe. Close the open ends of pipe by securing watertight plugs when pipe laying is not in progress. Remove any earth or other material that enters pipe, lateral pipe, or appurtenances through any open pipe end.

3.9 BACKFILLING WATER MAIN AND FORCE MAIN TRENCHES

A. Backfilling of water main and force main trenches shall meet the requirements of ANSI/AWWA C600, unless otherwise specified in this Section.

B. Do not backfill trenches and excavations until all utilities have been inspected by the WPWD or designee and until all underground utilities and piping systems are installed in accordance with the requirements of the specifications and the drawings. Required hydrostatic tests may be applied to the line either before and after the trench is backfilled, subject to approval of the WPWD or designee.

C. Place and tamp bedding and backfill in a manner which will not damage pipe coating, wrapping, or encasement.

D. Material from the trench subgrade to the centerline of the pipe shall be Class II bedding. Place bedding by hand or approved mechanical methods in layers of 8 inches loose depth. Compact bedding by hand tamping or with a power operated hand vibrating compactor. Deposit bedding in the trench for its full width on each side of the pipe simultaneously.

E. Place pipe cover material from the centerline of the pipe to 12 inches over the pipe. Compact pipe cover material to the density required to allow backfill over the pipe cover material to be compacted to the density specified in this Article.

F. Do not use the following materials for backfill:

1. Unsuitable materials;
2. Frozen materials;
3. Materials which are too wet or too dry to be compacted to the densities specified in this Article.



G. Where the edge of the trench is within 5 feet of the existing roadway pavement, it shall be backfilled with Flowable Backfill. Where the trench is located within existing pavement or any trench specifically indicated on the drawings shall be backfilled with Flowable Backfill. Where the edge of the trench is within 5 feet or crosses a proposed roadway pavement, it shall be backfilled with Flowable Backfill. Place Flowable Backfill in lifts. In all areas, cuts and trenches shall be backfilled with Flowable backfill to within 1 ½" inches of the existing asphalt paved surface The remainder of the trench is to be filled with crushed stone and compacted in place, prior to opening the street to traffic. The Contractor shall add crushed stone and grade until sufficient settlement has taken place and final restoration is made.

3.10 BACKFILLING SANITARY SEWER AND STORM SEWER TRENCHES

A. Do not backfill trenches and excavations until all utilities have been inspected by the WPWDor designee and until all underground utilities and piping systems are installed in accordance with the requirements of the specifications and the drawings.

B. Place and tamp bedding and backfill in a manner which will not damage pipe coating, wrapping, or encasement.

C. Bedding procedures for sanitary sewers and storm sewers shall be as specified in Manufacturer's recommendation, or WPWD specifications. The more stringent specification will apply..

D. If bedding does not cover the pipe, place pipe cover material from the top of bedding to 12 inches over the pipe. Compact pipe cover material to the density required to allow backfill over the pipe cover material to be compacted to the density specified in this Article.

E. Do not use the following materials for backfill:

1. Unsuitable materials;
2. Frozen materials;
3. Materials which are too wet or too dry to be compacted to the densities specified in this Article.

F. Where the edge of the trench is within 5 feet of or crosses the existing roadway pavement, it shall be backfilled with Flowable Backfill. Backfill any trench specifically indicated on the drawings with Flowable Backfill.



| DATE | MARK | REVISIONS | BY |
|---|---|---|---|
| | | | |

DAVID J. STOEPPELWERTH
REGISTERED
No. 19358
STATE OF INDIANA
PROFESSIONAL ENGINEER

THIS DRAWING IS NOT INTENDED TO BE REPRESENTED AS A RETRACEMENT OR ORIGINAL BOUNDARY SURVEY, A ROUTE SURVEY OR A SURVEYOR LOCATION REPORT.

CERTIFIED: 2/1/12

STOEPPELWERTH
ALWAYS ON
7965 East 106th Street, Fishers, IN 46038-2505
phone: 317.849.5935 fax: 317.849.5942

CONSTRUCTION SPECIFICATIONS
BRIDGEWATER APARTMENTS
WESTFIELD HAMILTON COUNTY, INDIANA

DRAWN BY: KRG
CHECKED BY: BKR
SHEET NO. C803
S & A JOB NO. 56030JUSL1

S:\56030JUS-L1\DWG\C803-Specifications.dwg, 1/21/2013 4:49:03 PM, KGilson, 1:1

G. Trenches Not Requiring Special Backfill: Backfill trenches not requiring granular backfill with suitable excavated material. Place and compact backfill to produce an adequate foundation for the applicable paved or unpaved surface treatment. Fill and restore any settlement of the backfill. In paved areas, backfill shall be maintained to subbase elevation. In unpaved areas, backfill shall be mounded above finish grade to allow for settlement. Grade unpaved area to be restored 6 inches below finish grade after settlement of backfill and immediately before restoration of vegetated areas. Place 6 inches of topsoil over area to be restored.

H. Trenches in Traveled Pavements: All cuts and trenches in paved streets or other paved areas shall be backfilled with flowable fill material.

3.11 MAINTAINING TRAFFIC

A. Before closing any thoroughfare, the Contractor shall notify and, if necessary, obtain a permit or permits from the duly constituted public authority having jurisdiction, state, county, city/town, school corporation, and public safety agencies.

B. The Contractor shall notify the Town of his intention to close a particular street 72 hours in advance of the proposed closing. The Contractor shall place all proper detour signs and barricades prior to the actual street closing.

C. During the construction, the Contractor shall be responsible for maintaining and protecting the pedestrian and vehicular traffic at all times on all streets involved and providing access to all residential and commercial establishments adjacent to the construction area. The Contractor shall furnish and maintain signage, barricades, flares, etc., in accordance with the latest version of the Indiana Manual on Uniform Traffic Control Devices. The signage, barricades, etc., must be in good condition.

D. The Contractor shall conduct his work in such a manner as not to unduly or unnecessarily restrict or impede normal traffic through the streets of the community. Insofar as it is practicable, do not locate excavated material and spoil banks in such manner as to obstruct traffic. Keep the traveled way of all street, roads, and alleys clear and unobstructed insofar as is possible. Do not use streets, roads, or alleys for the storage of construction materials, equipment supplies, or excavated earth, except when and where necessary. If required by duly constituted public authority, the Contractor shall, at his own expense, construct bridges or other temporary crossing structures over trenches so as not to unduly restrict traffic. Such structures shall be of adequate strength and proper construction and shall be maintained by the Contractor in such manner as



not to constitute an undue traffic hazard. Private driveways shall not be closed, except when and where necessary, and then only upon due advance notice to the WPWD and Homeowner, and for the shortest practicable period of time, consistent with efficient and expeditious construction. The Contractor shall be liable for any damage to persons or property resulting from his work.

3.12 WALKS AND PASSAGEWAYS

The Contractor, when required, shall make provisions at cross streets for the free passage of vehicles and foot passengers, either by bridging or otherwise, and shall not obstruct the sidewalks, gutters, or streets, nor prevent in any manner the flow of water in the latter, but shall use all proper and necessary means to permit the free passage of surface water along the gutters. The Contractor shall immediately cart away all offensive matter, exercising such precaution as may be directed by WPWD or designee. All material excavated must be so disposed of as to inconvenience the public and adjacent tenants as little as possible and to prevent injury to trees, sidewalks, fences, and adjacent property of all kinds. The Contractor may be required to erect suitable barriers to prevent such inconvenience or injury.

3.13 WARNING LIGHTS

The Contractor shall place sufficient warning lights on or near the work and keep them illuminated during periods of reduced visibility (from twilight in the evening until sunrise) and will be held responsible for any damages that any party or the Town may sustain in consequences of neglecting the necessary precaution in prosecuting this work.

3.14 CLEANUP AND MAINTENANCE

A. Cleanup the job site as backfilling is completed. Remove excess earth, rock, bedding, materials, and backfill materials. Remove unused piping materials, structure components, and appurtenances. Restore items moved, damaged, or destroyed during construction. Grade area to be restored. Leave backfill mounded over trenches which are not backfilled with Special Backfill. Cleanup and restoration specified in this paragraph shall be completed within 1,000 feet of excavation.

B. Restoration of grass, bushes, trees, and other plants shall be completed by Contractor to original or better condition.

C. Restoration of pavement and walks shall be specified in Section 02500, Paving and Surfacing. A temporary driving surface, such as crushed stone, shall be compacted in place in the trench area as backfilling is complete. Cold-mix asphalt patching material may be used as a temporary



driving surface at the Contractor's option or when specifically called for in the plans or specifications. Temporary pavement shall not be more than 1,000 feet behind the excavation. When no existing pavement remains after excavation, a temporary compacted aggregate surfacing may be provided instead of the permanent pavement or a temporary cold-mix asphalt pavement.

D. Maintain the job site until the work has been completed and accepted. Fill trenches which settle when settlement is visible. Restore items damaged by construction or improper restoration. Keep dust conditions to minimum by the use of water.

END OF SECTION 02222

SECTION 02660 - WATER MAINS

PART 1 - GENERAL

1.1 DESCRIPTION

A. Scope: Furnish and install pipe, fittings, valves, hydrants and appurtenances necessary to complete work shown or specified.

B. Codes, specifications and standards referred to by title or number in this specification shall be adhered to, and latest revisions shall apply in all cases.

C. Definitions

1. Abbreviations

a. ANSI - American National Standards Institute.
b. ASTM - American Society for Testing & Materials.
c. AWWA - American Water Works Association.

2. All pipe, fitting and valve sizes and references to pipe diameter on the drawings or in the specifications are intended to be nominal size or diameter and shall be interpreted as such.

1.2 QUALITY ASSURANCE

A. Mark pipe, fittings, valves and hydrants according to the applicable specification or standard. Each length of pipe shall bear the name or trademark of the manufacturer, the location of the plant, and the date of manufacture. Each length shall likewise be marked to designate the class or strength of the pipe. The marking shall be made on the exterior or interior of the pipe barrel near the bell or groove end and shall be plainly visible. Pipe shall have permanently extruded stripes on three (3) or four (4) sides according to the following schedule:

Water Main: Blue Stripes

B. The Contractor shall test and disinfect water mains constructed under this Contract, as specified in this Section.

C. The Town shall collect samples of water from water mains constructed after the piping has been disinfected. The Town will submit the samples to the applicable regulatory agency for bacteriological analysis. Collection and submittal of these samples shall meet the requirements of



the applicable regulatory agency. If samples do not pass the requirements of the bacteriological analysis, the water main will be disinfected and sampled again. This procedure will be followed until the samples pass the analysis.

D. A performance test may be required by the Public Works Director, at any time, for each crew installing water mains. The Contractor shall perform these tests at no additional cost to the Owner. When required by the Public Works Director, the Contractor shall test a given section of water main installed by a given crew. The section shall be a continuous section of water main which can be isolated by valves shown on the drawings. The Contractor shall not install water mains in other sections until the first section has been successfully tested.

PART 2 - PRODUCTS

2.1 GENERAL

All pipe, fittings, valves, hydrants and appurtenances shall be as shown on the drawings or as required by the manufacturer's and ANSI/AWWA specifications. All pipe, fittings, valves, hydrants and appurtenances shall be new and unused.

2.2 BURIED WATER MAIN PIPE AND FITTINGS

A. Ductile Iron Water Mains (3" and Larger)

1. Pipe

a. Ductile iron pipe shall meet the requirements of ANSI/AWWA C151/A21.51-91. Design and manufacture pipe for the pressure class listed plus 100 psi surge pressure. Additionally, a safety factor of 2.0 and a depth of cover, indicated on the drawings or as required by the manufacturer's and ANSI/AWWA specifications, shall be included. Minimum thickness class shall be as follows:

| Size Range | Pressure Class |
|---|---|
| 4" – 12" | 350 |
| 14" – 20" | 250 |

b. Pipe joints shall be push-on type. Joints shall meet the requirements of ANSI/AWWA C111/A21.11. Restrained joints shall be Lok-Ring, Lok-Fast, Lok-Tyte, or equal,

2. Fittings



a. Fittings shall be ductile iron. Fittings for standard size pipe shall meet the requirements of ANSI/AWWA C110/A21.10-93. Compact or short body fittings 3 inches through 16 inches shall meet the requirements of ANSI/AWWA C153/A21.53-94. Design and manufacture fittings for a pressure rating of at least 150 psi.
b. Fitting joints shall be mechanical joints or restrained push-on joints. Joints shall meet the requirements of ANSI/AWWA C111/A21.11. Thrust block all mechanical joints as indicated on the drawings or as required by the manufacturer's and ANSI/AWWA specifications. Pipe connecting to restrained joint fittings shall be restrained as indicated on the drawings or as required by the manufacturer's and ANSI/AWWA specifications.

3. Adapters

a. Adapters from ductile iron water mains to flange joint valves or fittings shall be ductile iron. Adapters shall meet the requirements of ANSI/AWWA C110/A21.10-93. Design and manufacture adapters for a pressure class rating of 150 psi.
b. Adapter ends connecting to ductile iron water mains shall be one of the following: plain end, push-on joint, mechanical joint or restrained push-on joint. Adapters with plain ends, push-on joints or mechanical joints may be used where restrained joints are not required. Adapters shall have restrained push-on joints where restrained joint piping is required, as indicated on the drawings. Mechanical joints and restrained push-on joints shall meet the requirements of ANSI/AWWA C111/A21.11. Restrained joints shall be Lok-Ring, Lok-Fast, Lok-Tyte or as approved by the Public Works Director.
c. Adapter ends connecting to flange joint valves or fittings shall have joints complying with the specifications for the applicable valves or fittings.

4. Line the inside surfaces of all pipe, fittings and adapters with single layer cement mortar lining. Cement mortar lining and seal coating shall meet the requirements of ANSI/AWWA C104/A21.4-95. Coat the outside surfaces of all pipe, fittings and adapters with a bituminous coating, complying with ANSI/AWWA C151.
5. Gaskets for mechanical joints and push-on joints shall meet the requirements of ANSI/AWWA C111/A21.11.
6. Nuts and Bolts



a. Nuts and bolts for mechanical joints shall be high strength, heat treated, alloy steel. Nuts shall be hexagon nuts, bolts shall be tee head bolts. Nuts and bolts shall meet the requirements of ANSI/AWWA C111/A21.11.
b. Nuts and bolts for restrained push-on joints shall meet the requirements of the joint manufacturer.

7. Polyethylene encasement for ductile iron water mains shall be installed and shall meet the requirements of ANSI/AWWA C105/A21.5. Installation of the polyethylene encasement shall be omitted if written approval is made by the ductile iron pipe manufacturer and/or the Public Works Director. Contractor/Developer shall be required to provide soils testing results for corrosivity at no additional charge to the Town if omission of the polyethylene encasement is proposed.

B. Polyvinyl Chloride Water Mains (3" to 8")

1. Pipe

a. Polyvinyl chloride pipe shall meet the requirements of ANSI/AWWA C900, Class 150/DR18. Design and manufacture pipe for a working pressure of 150 psi plus 100 psi surge pressure. Additionally, a safety factor of 2.0 and a depth of cover, indicated on the drawings or as required by the manufacturer's and ANSI/AWWA specifications, shall be included.
b. Polyvinyl chloride pipe shall have ductile-iron-pipe-equivalent outside diameter.
c. Pipe joints shall be push-on type and meet the requirements of ANSI/AWWA C900. Do not use solvent-cement joints.

2. Fittings

a. Fittings shall be ductile iron and meet the requirements of ANSI/AWWA C110/A21.10. Design and manufacture fittings for a pressure rating of 150 psi.
b. Pipe joints shall be push-on type and meet the requirements of ANSI/AWWA C104/A21.4. Coat outside surfaces of fittings with bituminous coating. Outside coating shall meet the requirements of ANSI/AWWA C110/A21.10.



c. Fitting joints shall be mechanical joints. Mechanical joints shall meet the requirements of ANSI/AWWA C111/A21.11.
d. Mark each fitting. Marking shall meet the requirements of ANSI/AWWA C110/A21.10.

3. Adapters

a. Adapters from polyvinyl chloride water mains to victaulic, flange joint valves or fittings shall be ductile iron. Adapters shall meet the requirements of ANSI/AWWA C110/A21.10. Design and manufacture adapters for a pressure rating of 150 psi.
b. Line the inside surfaces of adapters with a single cement mortar lining. Cement mortar lining and seal coating shall meet the requirements of ANSI/AWWA C104/A21.4. Coat outside surfaces of adapters with bituminous coating, complying with ANSI/AWWA C110/A21.10.
c. Adapter ends connecting to polyvinyl chloride water mains shall have plain ends or mechanical joints. Mechanical joints shall meet the requirements of ANSI/AWWA C111/A21.11.
d. Adapter ends connecting to victaulic, flange joint valves or fittings shall have joints complying with the specifications for the applicable valves or fittings.

4. Gaskets

a. Gaskets for polyvinyl chloride push-on joints shall meet the requirements of ANSI/AWWA C900.
b. Gaskets for mechanical joints shall meet the requirements of ANSI/AWWA C111/A21.11 and ASTM F477.

5. Nuts and bolts for mechanical joints shall be high strength, heat treated, alloy steel. Nuts shall be hexagon nuts, and bolts shall be tee head bolts. Nuts and bolts shall meet the requirements of ANSI/AWWA C111/A21.11.

C. High-density polyethylene (HDPE) for Water Mains (3" or larger)

1. Pipes: Polyethylene piping and fittings shall be made of a high density polyethylene pipe compound with extra high molecular weight that meets the requirements for Type III, Grade P345 Polyethylene Material as defined in ASTM D-1248 (PE 3408). The minimum pressure class/SDR rating acceptable shall be Class 160/SDR 11. The pipe shall be DIPS and shall have an interior diameter no less than the



piping that it is connected to.

2. Joints: Joints shall be of a heat fusion joining system. Pipe and fittings shall be thermal butt fusion, saddle fusion, or socket fusion in accordance with manufacturer recommended procedures and ASTM D-2161. At the point of fusion, the outside diameter and minimum wall thickness of the fitting shall match the outside diameter and minimum wall thickness specifications of ASTM D-1248 for the same size pipe.

Joining of the pipes and fittings shall be performed in accordance with ASTM D-2774. Depending upon the installation requirements and site location, joining shall be performed within or outside the excavation. Joints of the pipe sections shall be smooth on the inside and internal projection beads shall not be greater than 3/16 inch.

The tensile strength at yield of the butt-fusion joints shall not be less than the pipe. A specimen of the pipe cut across the butt-fusion joints shall be tested in accordance with ASTM D-638

The manufacturer shall provide fusion training. The contractor and the onsite joint inspector shall be trained by the manufacturer or manufacturer's authorized representative.

The fusion equipment and operator shall be required to demonstrate successful field experience. Regarding fusion over 36" capability, the fusion unit shall be field tested for a period of five years and the fusion operator shall have pipe size experience of the same size pipe on this project for five years or longer.

3. Fittings: All fitting shall be provided as indicated on the plans. HDPE Fittings shall be of the same material and class as the pipe and shall be manufactured by the manufacturer of the pipe. HDPE Elbows, tees, and wyes shall be manufactured by mitered fabrication. The manufacturer shall have a written specification for all standard mitered fittings, which establishes Quality Control criteria and tolerances. The manufacturer may be required to demonstrate its ability to produce product required by this specification.

Mechanical joint anchor fittings (MJ Adapter or Harvey Adapter) shall be used to transition from ductile iron to HDPE and from HDPE to PVC. The fitting shall be stronger than the pipe in that when it is subjected to tensile stress the pipe will pull apart before the fitting will pull out and the pipe will blow before the fitting will rupture under pressure.



All pressure rated fittings shall be rated according to the manufacturer's written specifications, and clearly labeled on the fittings as such.

2.3 PIPE AND FITTINGS SMALLER THAN 3-INCH

A. Pipe shall be Type K drawn copper and shall meet the requirements of ASTM B88. Cooper pipe must be used for all piping to the meter pit.

B. Fittings and couplings shall be cast bronze and shall meet the requirements of ASTM B16.18. Construct and manufacture fittings and couplings for a pressure rating of 150 psi.

C. Unions shall be bronze and shall meet the requirements of ASTM B16.18. Design and manufacture unions for a pressure rating of 150 psi.

D. Flanges for connection of screwed joint pipe to flange joint valves or fittings shall be 125-16 cast iron, screwed companion flanges, complying with both ASTM A126 and ANSI B16.1.

E. Tape for screwed joints shall be teflon.

F. Gaskets for flange joints shall be 1/16-inch thick, full face and conform to ANSI/AWWA C111/A21.11. Gaskets shall be rubber or as approved by the Public Works Director.

G. Bolts for flange joints shall be steel, heavy hexagon head machine bolts. Nuts shall be steel, semi-finished, heavy hexagon nuts. Nuts and bolts shall meet the requirements of ASTM A307 for Grade B and be zinc-coated alloy steel.

2.4 VALVES

A. Butterfly Valves

1. Butterfly valves and operators shall meet the requirements of AWWA Standard C504. Valves and operators shall be Class 150B.
2. Buried butterfly valves shall have mechanical joints. Mechanical joints shall meet the requirements of AWWA C111. Butterfly valves installed above ground or in structures shall have flange joints as specified in AWWA Standard C504. Nuts, bolts, and gaskets for flange joints shall meet the requirements of ANSI/AWWA C110/A21.10. Nuts and bolts shall be cadmium plated. Gaskets shall be full face and shall be red rubber, or equal.



3. Each buried butterfly valve shall have a manual operator and a 2-inch operating nut. Valve opening direction shall be consistent with operation of existing valves in the waterworks in which the valves are installed, unless otherwise directed by the Engineer.
4. Each butterfly valve installed above ground or in a structure shall have a manual operator and handwheel.

B. Gate Valves

1. Buried gate valves 4-inches and larger shall be full ductile iron body, epoxy fusion bonded inside and out, non-rising stem gate valves. Valves shall meet the requirements of ANSI/AWWA C500 or C509 and have mechanical joint ends. Mechanical joints and joint accessories shall comply with ANSI/AWWA C111/A21.11. Valve opening direction shall be consistent with operation of existing valves in the waterworks where the valves are installed, unless otherwise directed by the Public Works Director.
2. Three-inch buried gate valves shall be full ductile iron body, epoxy fusion bonded inside and out, non-rising stem gate valves. Valves shall meet the requirements of ANSI/AWWA C500 or C509; except, ends shall be screwed. Screwed ends shall conform to ANSI B16.3. Valve opening direction shall be consistent with operation of existing valves in the waterworks where the valves are installed, unless otherwise directed by the Public Works Director.
3. Gate valves 4-inches and larger installed above ground or in structures shall be full ductile iron body, epoxy fusion bonded inside and out, outside screw and yoke gate valves. Valves shall correspond to ANSI/AWWA C500 or C509. Outside screw and yoke gate valves shall have flange joint ends and malleable iron handwheels. Flange joints and accessories shall be as specified in ANSI/AWWA C110/A21.10. Nuts and bolts shall be zinc-coated alloy steel. Gaskets shall be full face and rubber, or as approved by the Public Works Director.
4. Gate valves smaller than 4-inch installed above ground or in structures shall be bronze, 125 lb. S.W.P, double disc, screwed-in bonnet, rising stem, inside screw gate valves with screwed ends and malleable iron handwheels. Valves shall meet the requirements of federal specifications WASTEWATER-V-54d for Class A, Type III Valves.

C. Buried valves 2-inch and smaller shall be curb stops. Curb stops shall meet the applicable requirements of ANSI/AWWA C800, ASTM B-62 for 85-5-5-5 composition bronze, and USAS B2.1. Curb stops shall be Mueller H-10283, Ford B11 Series, or as approved by the Public Works Director.



D. Tapping Valves

1. Tapping valves shall comply with both ANSI/AWWA C500 or C509 and have flange mechanical joint ends. Double disc gate valve gates, gate rings and body-seat rings shall be oversized to permit entry and exit of tapping machine cutters.
2. Valve end connecting to tapping sleeve shall have a flange for bolting to the sleeve. The flange shall have a tongue which fits a recess in the sleeve. Tongues shall meet the requirements of MSS SP-60. Resilient seated gate valves having a port diameter equal to or exceeding 1/4 inch over nominal diameter shall not require a tongue. Flange dimensions and drilling shall meet the requirements of ANSI B16.1. Nuts, bolts, and gaskets for flange joints shall meet the requirements of ANSI/AWWA C110/A21.10-93. Nuts and bolts shall be zinc-coated alloy steel, and gaskets shall be rubber, or as approved by the Public Works Director. Mechanical joints and accessories shall meet the requirements of ANSI/AWWA C111/A21.11. A full nominal diameter cutter shall be used for tapping.
Tapping valves 14-inch and smaller shall be installed vertically. Tapping valves 16-inch and larger shall be installed horizontally and shall have bypass valves. Tapping valves installed horizontally shall have rollers and tracks. Valves 16-inch and larger shall have gear operators with enclosed gear cases suitable for buried service. Gear cases shall be extended type or totally enclosed type. Extended type gear cases shall have bolted side plates to cover stem and stuffing box.

E. Air and Vacuum Valves: Air and vacuum valves shall be as follows:

| Size | Specification |
|---|---|
| ½" | Apco No. 141WD, Val-Matic 100DWS, or equal |
| 1" | Apco No. 142WD, Val-Matic 101DWS, or equal |
| 2" | Apco No. 144WD, Val-Matic 102DWS, or equal |
| 3" | Apco No. 146WD, Val-Matic 103DWS, or equal |
| 4" | Apco No. 1604/152, Val-Matic 104DWS, or equal |
| 6" | Apco No. 1606/153, Val-Matic 106DWS, or equal |

2.5 VALVE BOXES

A. Valve boxes for butterfly valves and gate valves shall be cast iron. Valve boxes shall be two piece or three piece type. Each two piece box shall be complete with bottom section, top section and cover. Each three piece box shall be complete with base, center section, top section and cover. Valve boxes shall be extension type with slide or screw type adjustment.



Each base and bottom section shall be the proper size for the valve served. Each valve box assembly shall be the proper length for the valve served. The minimum thickness of metal shall be 3/16-inch. Cast the word "WATER" in each valve box cover.

2.6 FIRE HYDRANTS

A. Fire hydrants shall be dry-barrel, compression shutoff, traffic model and comply with AWWA C502. Main valve size shall be 5-1/4 inch. Inlets shall be 6-inch mechanical joint. Each hydrant shall have two 2-1/2-inch nozzles and one 5-inch Storz pumper nozzle. Nozzle threads and hydrant opening direction shall be consistent with existing fire hydrants in the waterworks in which the fire hydrants are installed, unless otherwise directed by the Public Works Director. Each hydrant shall be the proper length for the water main to which the hydrant is connected. Fire hydrant coating shall meet the requirements of AWWA C502. Fire hydrants shall be MAB Fire Protection Red (7068), within the Westfield Washington Fire Department jurisdiction or MAB Caution Yellow (7077), within the Noblesville Fire Department jurisdiction. Hydrants shall be Model No. A423, as manufactured by Mueller Company.

B. Fire Hydrant Placement – Fire Hydrants shall be placed no further apart than 300 feet in all residential subdivisions, subdivision sections, and other residential areas in which dwelling density meets or exceeds three dwelling units per gross acre. Fire hydrants shall be placed no further apart than 300 feet in all Industrial, Business, and Commercial areas, and all Industrial, Business, and Commercial uses. Such requirement shall be in full force and effect unless explicitly exempted by the Chief of the local fire department. For residential uses with densities less than three dwelling units per gross acre, the requirements as established in Table No. III-B-A of the Uniform Fire Code shall apply. Where there is any ambiguity or dispute concerning the interpretation of this requirement, the decision of the Chief of the local fire department shall prevail subject to appeal.

2.7 SPRINKLER SYSTEMS

Multi-family developments, duplexes, and hotels/motels shall be required to have sprinkler systems installed in the attics of said structure as approved by the Chief of the local fire department. Such requirement shall be in full force and effect unless explicitly exempted by the Chief of the local fire department. Where there is any ambiguity or dispute concerning the interpretation of this requirement, the decision of the Chief of the local fire department shall prevail subject to approval.

2.8 TAPPING SLEEVES



A. Tapping sleeves shall be stainless steel split sleeves. Each sleeve shall have a branch connection with a flange end. The inside diameter of each branch shall be over-sized to permit entry and exit of tapping machine cutters. Each flange shall have a recess to center a tapping valve. Recesses shall meet the requirements of MSS SP-60. Flange dimensions and drilling shall meet the requirements of ANSI B16.1. The sleeve dimensions shall be such that the sleeves will not leak when installed on cast iron, ductile iron, or polyvinyl chloride pipe with outside diameters shown in ANSI/AWWA Standards.

B. Tapping sleeves for 4-inch through 16-inch pipe shall be mechanical joint type. Design and manufacture tapping sleeves for a working pressure of 200 psi.

C. Tapping sleeves for 18-inch and larger pipe shall be mechanical joint type. Design and manufacture tapping sleeves for a working pressure of 150 psi.

2.9 TAPPING SADDLES

A. Design and manufacture tapping saddles for a working pressure of 200 psi. Saddle bodies shall be stainless steel. Saddle straps shall be corrosion resistant steel alloy. Saddle gaskets shall be positively confined O-ring gasket. The sleeve dimensions shall be such that the sleeves will not leak when installed on cast iron, ductile iron, or polyvinyl chloride pipe with outside diameter shown in ANSI/AWWA Standards.

B. Each saddle used for making a wet connection shall have a branch connection with a flange end. The inside diameter of each branch shall be oversized to permit entry and exist of tapping machine cutters. Each flange shall have a recess to center a tapping valve. Recesses shall meet the requirements of MSS SP-60. Flange dimensions and drilling shall meet the requirements of ANSI B16.1.

C. Each saddle used for making a dry connection shall have a branch connection with a flange or mechanical joint end. Flange dimensions and drilling shall meet the requirements of ANSI B16.1. Nuts and bolts for flange joints shall meet the requirements of ANSI/AWWA C110/A21.10 and be zinc-coated alloy steel. Gaskets shall comply with ANSI/AWWA C110/A21.10, be full face and rubber, or as approved by the Public Works Director. Mechanical joints and accessories shall meet the requirements of ANSI/AWWA C111/A21.11.

D. Gaskets used to seal joints between saddle bodies and tapped pipes shall be O-ring type, circular in cross section, and made of natural or synthetic rubber with a Durometer Hardness of 70 ± 5.



2.10 FLANGE-MECHANICAL JOINT ADAPTERS

Flange-mechanical joint adapters shall be Dresser Style 127, Smith-Blair Type 912 or as approved by the Public Works Director.

2.11 AIR AND VACUUM VALVE CHAMBERS

A. Air and vacuum valve chambers shall be 4-foot diameter precast concrete manhole barrels with precast concrete flat slab tops. Precast manhole barrels shall meet the requirements of ASTM C478.

B. Air and vacuum valve chamber access frames and cover shall be Neenah R-1915-G, or equal. Cast the word "WATER" in each cover.

2.12 WATER SERVICES

A. Pipe shall be seamless copper tubing and shall meet the requirements of ASTM B88, Type "K."

B. Fittings and Couplings: Couplings for copper tubing shall be copper to copper or copper to iron, as required, and shall meet the applicable requirements of AWWA C800, ASTM B-62 for 85-5-5-5 composition bronze, and ANSI B2.1. Fittings and couplings shall be Ford Products, Pack Type Compression Joints, or equal.

C. Service connections made to a PVC water main shall be made using a stainless steel saddle with a corporation stop.

PART 3 - EXECUTION

3.1 INSPECTION

Inspect water main pipe, fittings, valves, hydrants, and appurtenances prior to installation. Promptly remove damaged or unsuitable products from the job site. Replace damaged or unsuitable products with undamaged and suitable products.

3.2 LAYING OF WATER MAINS

A. Proper tools and facilities shall be provided and used by the Contractor for safe working conditions.

B. Lay and maintain pipe to the lines and grades shown on the drawings or to the minimum depth specified in this Article. Install fittings, valves and hydrants in the locations shown on the drawings.



C. When the exact location of buried utilities is unknown and piping is to be constructed parallel and close to said utilities, adjust the alignment of the piping to least interfere with these utilities. This applies unless otherwise shown on the drawings or specified by the Public Works Director.

D. All crossings of water mains and sanitary sewers or storm sewers must be in accordance with 327 IAC 8-3.2-9. Water mains shall be laid at least 10 feet horizontally from any existing sanitary sewer, sewage force main, or storm sewer. The distance shall be measured from outside edge of water main to outside edge of the sanitary sewer or storm sewer. Water mains crossing sanitary sewer, sewage force mains, or storm sewer shall be laid to provide a minimum vertical distance of 18 inches between the outside of the water main and the outside of the sanitary sewer, force main, or storm sewer. The 18-inch separation shall apply whether the water main is over or under the sewer or force main. Lay water mains at crossings of sewers and force mains so a full length of water main pipe is centered on the sewer or force main whenever possible.

E. No watermains shall be within eight (8) feet of a sanitary sewer manhole, a storm sewer manhole, or a drainage grate support structure as measured from the outside edge of the water main to the outside edge of the sanitary sewer manhole, storm sewer manhole, or drainage grate support structure, per 327 IAC 8-3.2-9.e.

F. All piping shall be laid at a depth that provides at least 4'-6" of cover. Cover shall be measured as the vertical distance from the top of the pipe to the finish grade elevation.

G. Laying of water mains shall meet the requirements of ANSI/AWWA C600, unless otherwise specified in this Section.

H. Shape the bottom of the trench to give uniform circumferential support of the lower quarter of each pipe.

I. Do not lay pipe in water or when the trench or weather conditions are unsuitable for proper installation.

J. As each length of pipe is placed in a trench, joint the pipe being laid to the previously laid pipe. Bring the pipe to correct line and grade. Secure the pipe in place with bedding tamped under the pipe. Tamp bedding up to the centerline of the pipe.

K. Deflection from a straight line or grade shall not exceed the limits specified in this Section. If the alignment requires joint deflections in excess of the allowable deflection per joint, furnish and install fittings or a sufficient number of shorter lengths of pipe.



L. Provide thrust restraint at horizontal and vertical deflection fittings and at tees, plugs, tapping sleeves and tapping saddles. Restraint shall be concrete thrust blocking or restrained joint piping.

M. Where concrete thrust blocking is used, cover the fitting to be blocked with visqueen or a heavy duty grease to prevent adherence of the concrete to the fitting.

N. Block the open end of the pipe at the close of each day's work to prevent contamination from dirt or rain water and entry of any animal or foreign material.

O. Lower pipe, fittings, valves and hydrants into the trench by hand, hoists or ropes or other suitable tools or equipment that will not damage products, coatings or linings. Do not drop or dump pipe, fittings, valves, or hydrants into the trench.

P. Water main designs that require crossing a county legal drain shall be approved and constructed per the latest standards of the Hamilton County Surveyor's Office.

3.3 SETTING VALVES, VALVE BOXES AND FIRE HYDRANTS

A. Clean the interiors of valves and hydrants of foreign matter before installation. Tighten stuffing boxes. Inspect valves and hydrants in opened and closed positions to ensure all parts are in working condition.

B. Set valves and valve boxes plumb. Center valve boxes on the valves or valve operators. Locate valves outside the area of roads and streets where feasible. Tamp backfill around each valve box to a distance of 4 feet on all sides of the box or to the undisturbed trench face if less than 4 feet.

C. Set hydrants plumb with the pumper nozzle facing the street. The centerline of the outlet nozzles shall be at least 18 inches or at most 30 inches above finished grade at a hydrant. Install hydrant extensions where required to bring hydrant to proper elevation. Set each hydrant upon a slab of stone or concrete not less than 4 inches thick and 15 inches square. Wedge the side of each hydrant opposite the pipe connection against the undisturbed trench face to prevent the hydrant from blowing off the branch connection. Compact the backfill around each hydrant to finish grade. Furnish and install a gate valve and valve box in each hydrant branch connection. In the field, (Westfield) apply two coats of MAB Fire Protection Red (7068), (Noblesville) MAB Caution Yellow (7077) to the fire hydrants installed. All installed hydrants meeting the requirement of Section 2660; Para. 2.6 (a), shall be painted by the contractor either MAB



Fire Protection Red (7068), within the Westfield Washington Fire Department jurisdiction or MAB Caution Yellow (7077), within the Noblesville Fire Department jurisdiction. A three (3) foot clear space shall be maintained around the circumference of fire hydrants except as otherwise required or approved.

D. All inline water valve box caps should be painted blue. All hydrant valve caps should be painted MAB Fire Protection Red (7068).

3.4 CONNECTING TO EXISTING MAINS

A. The Contractor shall locate and verify exact size of all existing mains, both horizontally and vertically. Additionally, allow adequate time, after location and prior to making new connections, for changes in the connection location and size. Backfill excavation immediately after main is located and measured.

B. Make each wet connection with a tapping valve and tapping sleeve. Install and hydrostatically test each tapping valve and tapping sleeve assembly prior to tapping existing water main. Inspect each tapping valve prior to tapping existing water main. Open and close tapping valves, and inspect tapping valves in opened and closed positions to ensure all parts are in working condition. Inspect each tapping valve immediately before connecting tapping machine to ensure the tapping valve is open. Install watertight plug on the tapping valve outlet and backfill excavation if existing water main is not tapped within 48 hours after installing tapping valve and tapping sleeve or tapping saddle assembly. Install watertight plug on the tapping valve outlet and backfill excavation if new water main is not connected to tapping valve within 48 hours after making tap in existing water main.

C. Make each dry connection with fittings and valves indicated on the drawings. Furnish and install sleeves required to complete connections. All required pipe, fittings, valves, tools, and equipment shall be at the connection site prior to starting connection. Wash interior of new pipe, fittings, and valves with a solution containing 50 mg/l of chlorine prior to making connection. Make connections at night and on weekends when required. The Owner will operate existing valves. Install sufficient water main and restrain joints so existing water mains can be up in service immediately after connection is completed. Inspect joints and eliminate leaks immediately after connection is completed and existing mains are put in service. Install watertight plugs on open ends of pipe and valves, and backfill excavation if new water main is not connected to dry connection within 48 hours after completing dry connection.



| DATE | MARK | REVISIONS | BY |
|---|---|---|---|

DAVID J. STOEPPELWERTH
REGISTERED
No. 19358
STATE OF INDIANA
PROFESSIONAL ENGINEER

THIS DRAWING IS NOT INTENDED TO BE REPRESENTED AS A RETRACEMENT OR ORIGINAL BOUNDARY SURVEY, A ROUTE SURVEY OR A SURVEYOR LOCATION REPORT.
CERTIFIED: 2/1/12

STOEPPELWERTH
ALWAYS ON
7965 East 106th Street Fishers, IN 46038-2505
phone: 317.849.5935 fax: 317.849.5942

CONSTRUCTION SPECIFICATIONS
BRIDGEWATER APARTMENTS
WESTFIELD HAMILTON COUNTY, INDIANA

DRAWN BY: KRG
CHECKED BY: BKR
SHEET NO. C804
S & A JOB NO. 56030JUSL1

S:\56030JUS-L1\DWG\C804-Specifications.dwg, 1/21/2013 4:49:59 PM, KGilson, 1:1

## CHAPTER 400 STORM SEWER PIPES AND OPEN CULVERT MATERIALS

### SECTION 401 GENERAL

401.01 Introduction

This section covers all work necessary for the construction of the storm sewer piping systems and related items complete, including catch basins and inlet drains, manholes, junction chambers, diversion chambers, outfall structures, and miscellaneous structures.

This specification covers the following types of materials for storm sewers, culverts, underdrains, inlet drains, conduits, and miscellaneous applications:

1. Reinforced Concrete Pipe and Fittings
2. Polyvinyl Chloride Pipe (PVC)
3. Corrugated Metal Pipe
4. Structural Plate Arches
5. Aluminum or Aluminized Steel Pipe and Structural Plate
6. Multi-Plate Pipe and Pipe Arches
7. PVC Composite Pipe
8. Corrugated Polyethylene Pipe- SSD (Perforated and Non-Perforated)

All lots shall have access to a subsurface or storm drain or open ditch.

Storm sewer systems shall have a minimum of four hundred (400) feet between structures.

This specification requires project plans and construction specifications to be submitted to and approved by all appropriate regulatory agencies prior to beginning any work.

Before construction and preferably before fabrication, the Contractor shall submit to the Town of Westfield Public Works Department for approval calculations on the thickness or strength class and drawings showing pipe lengths, joints, and other construction and installation details.

Pipe Marking
Each length of pipe shall bear the name or trademark of the manufacturer, the location of the plant, and the date of manufacture. Each length shall likewise be marked to designate the class or strength of the pipe. The marking shall be made on the exterior or interior of the pipe barrel near the bell or groove end and shall be plainly visible.

401.02 Minimum Size for Storm Sewers

The minimum diameter of all storm sewers shall be 12 inches. When the minimum 12-inch diameter pipe will not limit the rate of release to the required amount, the rate of release for detention storage shall be controlled by an orifice plate or other device, subject to acceptance of the Town of Westfield Public Works Department.



401.03 Materials

Manholes, Inlets, and Other Structures

Storm sewer manholes and inlets shall be constructed of precast reinforced concrete. Material and construction shall conform to the latest edition of the Indiana Department of Transportation (INDOT) "Standard Specifications", Sections 702 and 720.

Materials for manholes, junction chambers, diversion chambers, and miscellaneous concrete structures shall comply with the following:

1. Cement shall be Portland cement and shall meet the requirements of ASTM Specification C150, AO 301, and ACI 318. Concrete for precast manhole sections shall be 3000 psi concrete. Monolithic manholes shall use 4000 psi concrete. Ready-mix concrete shall conform to ASTM C94, Amendm 2. Maximum size of aggregate shall be 3/4 inch. Slump shall be between 2 and 5 inches.
2. Forms for chamber and structures shall be plywood or other approved material. Steel forms shall be used for the inside face of monolithic concrete manholes.
3. Reinforcing steel shall conform to ASTM A615, Grade 60 deformed bars, or ASTM A616 Grade 60 deformed bars.
4. Mortar Materials:
   a. Sand - ASTM Designation C144, passing a No. 8 sieve.
   b. Cement - ASTM Designation C150, Type 1.
   c. Water - shall be potable.

The manufacturer shall provide openings for sewers entering and leaving the manhole. Any additional opening needed to be made in the field shall be made by drilling holes at least 1/2 inch in diameter with a maximum spacing of 3 inches.

Manhole steps shall be made from a steel reinforcing rod encapsulated in a copolymer polypropylene resin. The manhole steps shall equal or exceed OSHA requirements.

Any other special manholes, junction chambers, diversion chambers, and miscellaneous concrete structures shall be constructed as detailed on the drawings.

Manhole bases shall be set on a minimum of six (6) inches of # 8 aggregate.

Concrete ends sections shall have a minimum of a twenty-four (24) inch toe plate, either poured in place or precast, bolted to the end section per Standard Detail (ST-30). Corrugated end sections with toe plates shall be required within Westfield Public Works approval.

Catch Basins

During construction, precautionary measures such as adequate screening of grates shall be maintained to deter earth and other materials from entering the drains.

Catch Basins, for sediment control, locations to be determined by a Professional Engineer, and approved by the Town of Westfield Public Works Department. Catch Basins shall be located within easily accessible dedicated easements or right of way of sufficient size to facilitate the required maintenance of those structures

Catch basins and curb inlet structures which are two (2) feet by two (2) feet in size shall not have a depth deeper than four (4) feet from the invert of the lowest pipe to the lowest part of the rim



elevation of the casting. All structures which do not meet this criteria shall be a manhole type, which is forty-eight (48) inches in diameter.

Castings

Cast iron or ductile iron frames and gratings for catch basins and drain inlets shall be as shown on the drawings. Bearing surfaces shall be clean and shall provide uniform contact. Castings shall be tough, close-grained gray iron, sound, smooth, clean, free from blisters, blow holes, shrinkage, cold shuts, and all defects and shall conform to ASTM A48 Class No. 30-B.

During construction, precautionary measures such as adequate screening of grates shall be maintained to deter earth and other materials from entering the drains.

The following castings types are required:

1. Manholes – Neenah R 1772 A or equivalent
2. Beehive Inlets – Neenah R 4342 or equivalent
3. "Roll Curb" Inlets – Neenah 3501 – TR or TL or equivalent
4. "Chair Back" Curb Inlet – Neenah 3287 – 10V or equivalent
5. Other types shall require approval of the Westfield Public Works Department.

Curb inlets castings which possess open backs or have grate bars parallel to traffic flow (are not "bicycle safe) will not be accepted by the Westfield Public Works Department.

Storm sewer castings manhole covers, beehive inlets, curb inlets or other approved casting shall have the following phrases cast in recessed letters two (2) inches in height:

1. "Storm Sewer"
2. "Drains to River" or "Drains To Waterway"
3. "Dump No Waste"
4. Other phrases shall require approval of the Westfield Public Works Department.

All castings frames shall have a horizontal bearing surface around the entire perimeter of the frame in order to support the cover or grate.

Bench Walls
Bench walls shall be shaped and formed for a clean transition with proper hydraulics to allow the smooth conveyance of flows through the structure. The bench wall shall form a defined channel, to a minimum height of the spring line of the pipe.

Bench walls shall be formed using full depth Class "A" concrete. Solid concrete block, stone or sand shall not be permitted as a base or filler for the construction of the bench wall.

Reinforced Concrete Pipe and Fittings

Reinforced concrete pipe and fittings shall conform to ASTM C76, latest revision, for circular pipe and ASTM C507 for elliptical pipe.



Reinforced concrete pipe and fittings for normal conditions shall be reinforced in accordance with ASTM C76, Class III, IV or V, Wall B (minimum). Acceptance shall be on the basis of Subsection 4.1.1 of ASTM C76.

Circumferential reinforcing in circular pipe shall be required. Only with approval from the Westfield Public Works Department will elliptical reinforcing or combination of elliptical and circumferential reinforcing or part circular reinforcing shall be permitted, in circular pipe.

Concrete pipe shall be steam cured and shall not be shipped from point of manufacture for at least five days after having been cast.

Joints shall conform to the requirements of ASTM C443. Gaskets shall be of an oil resistant type having a maximum swell of 90% when tested in accordance with ASTM D471. Lubricant for jointing shall be approved by gasket manufacturer.

All rubber gaskets similar to and equal to "Press-Seal" or "Tylox" conforming to ASTM Designation C443, latest revision. The gasket shall be attached to the spigot of the pipe and shall be the sole element depended upon to make the joint flexible and practically watertight.

Butyl mastic joint sealant in rope or trowel applied form specifically made for permanently sealing joints in tongue and groove concrete sewer pipe. The material shall adhere tightly to the pipe surface and form a tight, flexible joint. The material shall have been in use for at least five years. Test results and material specifications shall be submitted to the Westfield Public Works Department and shall have been approved prior to use on the project.

Polyvinyl Chloride Pipe and Fittings

Polyvinyl chloride (PVC) pipe and fittings shall comply with ASTM D 3034.

Corrugated Metal Pipe and Pipe Arches

The following specifications shall govern the manufacture of the corrugated steel pipe and pipe arches.

1. Specifications for Zinc Coated (galvanized) Steel Sheets (ASTM A444).
2. Manufacture of Corrugated Steel Culverts and Underdrains (AASHTO M-36).
3. Structural Plate for Pipe, Pipe Arches, and Arches (AASHTO M-167.
4. Bituminous Coated Corrugated Steel Pipe and Arches (AASHTO M-190).
5. Sheet Material (ASTM A525).

Bituminous Coated Welded Seam Helically Corrugated Steel Pipe

The pipe shall be fabricated from flat coils. The base metal, spelter coating, and fabrication shall meet the applicable requirements of AASHTO M-36. Corrugations shall be 2-2/3-inch pitch by 1/2-inch depth. Each pipe shall have two annular corrugations rolled in each end. After the ends are rolled, the pipe shall be coated with bituminous material, inside and outside, to a minimum thickness of 0.05 inch as required by AASHTO M-190 for Type A coating.

Bituminous Coated and Paved Invert Welded Seam Helically Corrugated Steel Pipe

The pipe shall be fabricated from flat coils. The base metal, spelter coating, and fabrication shall meet the applicable requirements of AASHTO M-36. Corrugations shall be 2-2/3-inch pitch by 1/2-inch depth. Each pipe shall have two annular corrugations rolled in each end.

After the ends are rolled, the pipe shall be coated with bituminous material, inside and outside, to a minimum thickness of 0.05 inch. In addition, bituminous material shall be applied to form a



smooth pavement in the bottom 25% of pipe and in the bottom 40% of pipe arch as required by AASHTO M-190 for Type C coating.

Smooth Lined Welded Seam Helically Corrugated Steel Pipe

The pipe shall be fabricated from flat coils. The base metal, spelter coating, and fabrication shall meet the applicable requirements of AASHTO M-36. Corrugations shall be 2-2/3-inch pitch by 1/2-inch depth. Each pipe shall have two annular corrugations rolled in each end. Each pipe shall have two lifting lugs welded to the outside of the pipe.

After the ends have been rolled, the pipe shall be coated with bituminous material, inside and outside, to a minimum thickness of 0.05 inch as required by AASHTO M-190 for Type A coating. The pipe shall be centrifugally lined on the inside with bituminous material to form a smooth surface which fills the corrugations to a minimum thickness of 1/8 inch above the crests of the corrugations. The bituminous lining material shall meet the requirements of AASHTO M-190.

Bituminous Coated Pipe Couplings
Coupling bands shall be the same base metal and spelter coating as the pipe. Bands shall be 0.064-inch thick and 10-1/2 inches wide. Bands shall be bituminous coated and shall have two corrugations 7-5/8 inches center to center. Bands 12-inch diameter through 30-inch diameter shall be one-piece, and 36-inch diameter through 96-inch diameter shall be two-piece. Band lugs 12-inch diameter through 48-inch diameter shall be joined by one galvanized bar, bolt, and strap connector. Band lugs 54-inch diameter through 96-inch diameter shall be joined by two galvanized bar, bolt, and strap connectors.

Aluminum Alloy Structural Plate

Aluminum alloy plates and fasteners intended for use in the construction of structural plate pipe and pipe arch for storm sewers shall meet the applicable requirements of AASHTO M-219. The plate shall be fabricated from aluminum alloy 5052-H141. The chemical composition of the plates shall conform to ASTM B209 alloy 5052.

The corrugations shall have a pitch of 9 inches plus or minus 3/8 inch and depth of 2-1/2 inches plus or minus 1/8 inch. The inside crown radius of the corrugations shall be not less than 2 inches.

The structural plate pipe or arches shall be assembled in accordance with the manufacturer's erection instructions and in accordance with the drawings.

Aluminized Steel Pipe and Arches

Aluminized coated corrugated steel pipe and pipe arch intended for use in the construction of storm sewers shall meet the applicable requirements of AASHTO M-36. Sheet material shall meet the latest revision of ASTM A525 and AASHTO M-274. The coils from which the pipe is produced shall be coated with 1.0 ounce per square foot of commercially pure aluminum.

Pipe shall be furnished circular or as a pipe-arch shape as required and shall be fabricated with helical corrugations and a continuous welded seam extending from end to end of each length of pipe.

Each end of each pipe with the welded seam shall have two annular corrugations reformed to permit joining with bugger bands.

Coupling bands shall be bugger bands.



Multi-plate Pipe and Pipe Arches

Multi-plate pipe and pipe arch structures shall be in accordance with AASHTO M-167. They shall be made with steel sections with corrugations 6 inches wide by 2 inches deep running at right angles to the section.

Bolts and nuts shall be special heat-treated galvanized 3/4-inch diameter bolts in accordance with ASTM specifications.

Multi-plate pipes and pipe arches shall be designed in accordance with the manufacturer's design criteria and in accordance with the drawings.

Detailed instructions regarding erection shall be furnished by the manufacturer.

PVC Composite Pipe and Fittings

ABS or PVC composite pipe and fittings shall conform to ASTM D 2680, Latest Revision.

Corrugated Polyethylene Pipe and Fittings

Corrugated polyethylene pipe shall comply with the requirements fore materials, test methods, dimensions, and marking in accordance with AASHTO M-252 for pipe diameters 6" - 10", AASHTO M-294 for pipe diameters of 12" - 48", and AASHTO MP7 for 54" and 60".

The resin material shall meet ASTM D3350 cell classification 335400C.

The pipe lengths shall be connected using a gasketed, bell and spigot joint. This joint shall consist of a factory installed, gasketed double bell polyethylene coupling, a factory welded bell or integral bell. The spigot end of the pipe shall be furnished with a factory installed elastomeric profile "O-ring" rubber gasket that meets ASTM F-477.

The pipe shall be shipped with a removable wrap to protect the gasket. Provide lubrication to the joint prior to pushing together. At least two (2) corrugations of the spigot end must insert into the bell end.

All HDPE pipe shall be certified through the Plastic Pipe Institute (PPI) Third Party Certification Program. All HDPE pipe delivered and installed shall bear the Third Party Administered PPI Seal.

Subsurface Drain Tiles

Double wall smooth bore corrugated polyethylene tile, manufactured under specification ASTM F 667, shall be required for all subsurface drain tile installed in swales. Single wall corrugated polyethylene drain tile shall be required for earth side-grade drainage.

Polyethylene tile shall possess male and female pipe ends, which allow the construction of overlapping, gasket pipe joints, in conformance with the requirements of ASTM D 3212. The gasket material shall conform to all requirements of ASTM F 477. As an alternative, pipe joints utilizing external couplings bands will be accepted, provided the minimum AASHTO requirements for satisfying soil tightness are also achieved.

Storm sewer pipe shall be of the size shown on the drawings and shall meet all requirements of these specifications. Subsurface drain (SSD) shall have a minimum of four hundred (400) feet between structures. Subsurface drains shall have clean-outs installed every 400 feet or at changes in direction.



## CHAPTER 500 INSTALLATION OF STORMWATER FACILITIES

### SECTION 501 GENERAL

501.01 Pipe Cover, Grade, and Separation from Sanitary Sewers

Pipe

Pipe grade shall be such that, in general, a minimum of 2.0 feet of cover is maintained over the top of the pipe. If the pipe is to be placed under pavement, then the minimum pipe cover shall be 2.5 feet from top of pavement to top of pipe. Uniform slopes shall be maintained between inlets, manholes and inlets to manholes. Final grade shall be set with full consideration of the capacity required, sedimentation problems, and other design parameters. Minimum and maximum allowable slopes shall be those capable of producing velocities of between 2.5 and 10 feet per second, respectively, when the sewer is flowing full. Maximum permissible velocities for various storm sewer materials are listed in **Table 501-1**. A minimum of 2.0 feet of vertical separation between storm sewers and sanitary sewers shall be required. When this is not possible, the sanitary sewer must be encased in concrete or ductile iron within 5 feet, each side, of the crossing centerline.

Rear Yard Swale

Rear yard swales shall have a minimum slope of 2% gradient. Swales less than a 2% gradient are required to have double-wall perforated drain tile installed two (2) feet below the invert of the swale. Minimum swale slope shall be greater than 1% gradient. Subsurface drains shall have a minimum slope of .5% gradient.

Proposed road grades will be required to be graded within two (2) inches of the proposed sub-grade prior to installation of SSD. Trench width for SSD shall be a minimum of three (3) inches on both sides of the SSD, with a minimum trench width of twelve (12) inches.

501.02 Alignment

Storm sewers shall be straight between manholes and/or inlets.

501.03 Manholes/Inlets

All Manholes and Inlets must be pre-stamped with an appropriate message per the Town of Westfield Public Works Department Standards. Manholes and/or inlets shall be installed to provide human access to continuous underground storm sewers for the purpose of inspection and maintenance. The casting access minimum inside diameter shall be no less than 22 inches or a rectangular opening of no less than 22 inches by 22 inches. Manholes shall be provided at the following locations:

1. Where two or more storm sewers converge.
2. Where pipe size or the pipe material changes.
3. Where a change in horizontal alignment occurs.
4. Where a change in pipe slope occurs.
5. At intervals in straight sections of sewer, not to exceed the maximum allowed. The maximum distance between storm sewer manholes shall be as shown in **Table 501-2**.

In addition to the above requirements, a minimum drop of 0.1 foot through manholes and inlet structures should be provided. Pipe slope should not be so steep that inlets surcharge (i.e. hydraulic grade line should remain below rim elevation).



Manhole/inlet inside sizing shall be according to the Town of Westfield Public Works Department Standards. Note that the Town of Westfield Public Works Department may require the applicant to provide pre-treatment BMPs prior to discharge of the storm sewer line into a pond. .

501.04 Installation and Workmanship

Bedding and backfill materials around storm sewer pipes, sub-drains, and the associated structures shall be according to the Town of Westfield Public Works Department Standards. The specifications for the construction of storm sewers and sub-drains, including backfill requirements, shall not be less stringent than those set forth in the latest edition of the "INDOT Standard Specifications". Additionally, ductile iron pipe shall be laid in accordance with American Water Works Association (AWWA) C-600 and clay pipe shall be laid in accordance with either American Society of Testing Materials (ASTM) C-12 or the appropriate American Association of State Highway and Transportation Officials (AASHTO) specifications. Dips/sags on newly installed storm systems will not be allowed. Also, infiltration from cracks, missing pieces, and joints shall not be allowed. Variations from these standards must be justified and receive written acceptance from the Town of Westfield Public Works Department. All structures shall require inspection prior to backfill.

501.05 Special Hydraulic Structures

Special hydraulic structures required to control the flow of water in storm runoff drainage systems include junction chambers, drop manholes, stilling basins, and other special structures. The use of these structures shall be limited to those locations justified by prudent planning and by careful and thorough hydraulic engineering analysis. Certification of special structures by a certified Structural Engineer may also be required.

The use of stormwater lift stations will not be permitted under any circumstances.

501.06 Connections to Storm Sewer System

Unless otherwise approved, perforated subsurface drain tiles, footer drains, or sump pumps lines shall connect to a storm structure. Storm sewer connections shall be provided by either precast or drilled holes, which are to be a minimum of two (2) inches larger the O.D. of the connecting tile. Drain tile connections shall be made with either "Tee" or "Wye" method.

Blind connections to storm sewer pipes shall not be allowed.

Subsurface tile as specified herein may be used to convey water collected in sump pits and footer drains to an acceptable storm sewer outlet, provided these drain tiles are properly sized to accept these flows.

Gutter or building drains shall not be allowed to outlet directly into storm sewer systems.

To allow any connections to the storm sewer system, provisions for the connections shall be shown in the drainage calculations for the system. Specific language shall be provided in the protective covenants, on the record plat, or with the parcel deed of record, noting the ability or inability of the system to accommodate any permitted connections, for example, sump pumps and footing drains.

1. Sump pumps installed to receive and discharge groundwater or other stormwater shall be connected only into "T" subsurface drain (SSD) lateral connection if provided. When connection to the SSD is not possible, discharge pipe must daylight. Sump pumps installed to receive and discharge floor drain flow or other sanitary sewage shall be connected to the sanitary sewers. A sump pump shall be used for one function only, either the discharge of stormwater or the discharge of sanitary sewage, each being connected to the respective receiving system only.



2. Footing drains and perimeter drains shall be connected only into "T" subsurface drain (SSD) lateral connection if provided. When connection to the SSD is not possible, discharge pipe must daylight.
3. All roof downspouts, roof drains, or roof drainage piping shall discharge onto the ground and shall not be directly connected to the storm drainage system. Variation from this requirement may be requested and granted by the Town of Westfield Public Works Department in special circumstances. No downspouts or roof drains shall be connected to the sanitary sewers.
4. Garage and Basement floor drains and water softener discharge shall not be connected to the storm sewers.
5. Swimming Pool drains shall not be connected to the storm sewers unless the water is dechlorinated prior to being connected to the storm sewer.

501.07 Inspection and Rejection of Pipe

The quality of all materials, the process of manufacture, and the finished pipe shall be subject to inspection and approval by the Westfield Public Works Department or designee. Such inspection may be made at the place of manufacture or on the work after delivery, or at both places; and the pipe shall be subject to rejection at any time on account of failure to meet any of the specifications' requirements even though sample pipes may have been accepted as satisfactory at the place of manufacture.

Prior to being lowered into the trench, each pipe shall be carefully inspected and those not meeting the specifications shall be rejected and at once removed from the work.

The Westfield Public Works Department shall have the right to cut cores from such pieces of the concrete pipe as he desires for such inspection and tests as he may wish to apply. The Developer/Contractor shall pay for the samples of an Independent Laboratory Testing.

Holes left by the removal of cores shall be filled in an approved manner by and at the expense of the manufacturer of the pipe.

The Westfield Public Works Department shall also have the right to take samples of concrete after it has been mixed, or as it is being placed in the forms or molds, and to make such inspection and tests thereof as he may wish.

Any pipe which has been damaged after delivery will be rejected and replaced solely at the Contractor's expense.

501.08 Handling Pipe

Each pipe section shall be handled into its position in the trench only in such manner and by such means as the Westfield Public Works Department or designee approves as satisfactory. As far as practicable, the Contractor will be required to furnish slings, straps, and other approved devices to permit satisfactory support of all parts of the pipe when it is lifted.

501.09 Notice to Westfield Public Works Department

The Westfield Public Works Department or designee shall be notified when the pipes are to be laid in the trench. At least 15 feet of the pipe shall, under ordinary circumstances, be laid before covering begins.



501.10 Laying Pipe

All pipes shall be reinspected for soundness and damage due to handling immediately before being lowered into the trench. Any pipe found to be unsound or damaged will be rejected and shall be removed immediately from the site of the work.

No portion of a Storm Sewer pipe, open culvert, manhole, inlet, or subsurface tile system shall be installed directly or indirectly into frozen ground nor with frozen backfill materials.

Where ground water is encounter, the contractor shall make every effort necessary to secure a dry trench bottom prior to installation of the storm water system. The contractor shall be required to maintain the groundwater level below the base of the excavation. The Town, nor the Westfield Public Works Department, will not assume any liability for the actions of the Developer or Contractor in the performance of the required dewatering operation. If trench conditions outlined in this section cannot be achieved, the Westfield Public Works Department or designee may terminate installation until such efforts can be achieved.

All pipes shall be laid accurately to the required line and grade as shown on the drawings, and in the manner prescribed by the pipe manufacturer and appropriate ASTM Specifications, to form a close, concentric joint with the adjoining pipe and to bring the invert of each section to the required grade. The supporting of pipe on block will not be permitted.

Pipe lying shall precede upgrade, beginning at the lower end of the sewer.

Practically watertight work is required, and the Contractor shall construct the sewers with the type of joint specified.

Joints between precast structures shall be sealed with (1) An approved rubber gasket manufactured and installed in accordance with ASTM C 443, latest version, (2) A ½ inch diameter non-asphaltic mastic (Kent Seal or approved equal) conforming to AADHTO M-198 and Federal Specifications SS 521-A, or 4 (3) mortar or butyl rubber sealed on the outside and (4) mortar sealed on the inside and brushed smooth.

The annular space between the pipe and precast structure walls shall be filled inside and outside with a grout mixture composed of 2 parts of fine aggregate and one part of Portland Cement or Class "A" Concrete.

All pipes shall be laid to the line and grade as shown on the drawings. Variations from a uniform line and grade as shown on the drawings shall be cause for the line to be rejected.

The ends of the pipe shall be satisfactorily cleaned just before laying, and the joint shall be made in a satisfactory manner in accordance with the recommendations of the manufacturer on particular type of joint. All joint work shall be done by experienced workmen.

All pipes shall be bedded as described in this specification under Pipe Bedding. Bell holes shall be excavated in advance of pipe laying so the entire pipe barrel will bear uniformly on the prepared subgrade.

Each length of pipe shall be mechanically pulled "home" with a winch or come-along against the section previously laid and held in place until the trench and bedding are prepared for the next pipe section. Care shall be taken in laying the pipe so not to damage the bell or the spigot end of the pipe. Mechanical means consisting of a cable placed inside the pipe with a winch, jack, or come-along shall be considered to pull the pipe home where pushing the pipe will not result in a joint going completely home and staying in place.

The Contractor shall use laser beam equipment, surveying instruments, or other proven techniques to maintain accurate alignment and grade.



Open excavation shall be satisfactorily protected at all times. At the end of each day's work, the open ends of all pipes shall be protected against the entrance of animals, children, earth, or debris by bulkheads or stoppers. No bulkheads or stoppers shall be performed to allow passage of water into the installed pipe line to prevent flotation of the pipe line. Any earth or other material that may find entrance into the main sewer or into any lateral sewer through any such open end of unplugged branch must be removed at the Contractor's expense. The cost of all such plugs, and the labor connected therewith, must be included in the regular bid for the sewers.

Storm sewer which outlets into a Hamilton County Regulated Drain shall be approved, inspected, and constructed per the latest standards of the Hamilton County Surveyor's Office Standards.

501.11 Pipe Bedding and Haunching

Each pipe section shall be laid in a firm foundation of bedding material and haunched and backfilled with care.

Prior to pipe installation, carefully bring bedding material to grade along the entire length of pipe to be installed. To provide adequate support for the pipe, the following bedding procedures are recommended.

When Angular 60 to 12 mm (1/4 to 1/2-inch) clean graded stone, slag, or crushed stone material is used for bedding, little or no compaction is necessary due to the nature of the angular particles. A depth of 4 to 6 inches is generally sufficient to provide uniform bedding. If Class I material is used for bedding, it must also be utilized for haunching up to or higher than the spring line of the pipe to avoid loss of side support through migration of Class II haunching material into the bedding.

1. Take care with coarse sands and gravels and maximum size 20 mm (3/4-inch) materials, to provide uniformly compacted bedding. Excavate the bedding material or place it to a joint above the pipe bottom, determining such point by the depth of loose material resulting in the preparation of the bedding and the amount of compaction that will be required to bring the material to grade. Use hand or mechanical tamping to compact the bedding material to a minimum 85% Standard Proctor Density.
2. Slightly damp material will generally result in maximum compaction with a minimum of effort. If water is added to improve compaction or if water exists in the trench, take care to avoid saturation of Class II material, which could result in additional stability problems. Check grade of bedding after compaction.

Bedding material shall have a minimum thickness beneath the pipe of 4 inches (100 mm) or one-eighth of the outside diameter of the pipe, whichever is greater, and shall extend up the sides of the pipe one-sixth of the outside diameter of the pipe.

The rigid pipe, such as concrete or ductile iron, backfill between the bedding material and a plane 12 inches (300 mm) over the top of the pipe shall be hand-placed finely divided earth, free from debris and stones, or granular backfill if required.

For flexible pipe, corrugated metal pipe, the placement of embedment material or haunching around the pipe must be done with care. The ability of the pipe to withstand loading in a trench depends a large part on the method employed in its installation. If crushed stone, pea gravel, or graded gravel or sand is used to backfill between the bedding material and a plane 12 inches (300 mm) over the top of the pipe, it shall be hand placed. If fine sand, silt, or clayey gravels are used for initial backfilling over the pipe, the material shall be hand placed in 6- to 8-inch layers and hand compacted on both sides of the pipe to an elevation 12 inches (300 mm) over the top of the pipe. Care should be taken so not to compact directly over the pipe.



In yielding subsoils, the trench bottom shall be undercut to the depth necessary and backfilled with graded, crushed stone to form a firm foundation.

Where excavation occurs in rock or hard shale, the trench bottom shall be undercut and a minimum of 6 inches (150 mm) crushed stone bedding placed prior to pipe installation.

501.12 Concrete Cradle (Class "A" Bedding)

Concrete cradles shall be constructed of Class "B" concrete and of the design shown on the detailed drawings.

501.13 Manholes and Other Structures

Manholes and other structures are to be constructed at locations shown on the drawings and in accordance with the following specifications:

Precast concrete manhole sections shall conform to ASTM Designation C478, except as modified herein:

1. The joint design of the precast sections shall consist of a bell or groove on one end of the unit of pipe and a spigot or tongue on the adjacent end of the joining section.
2. The joint shall consist of a flat rubber gasket attached to the spigot end of the precast manhole sections and shall conform to Sections 6.1.6, 6.1.7 and 9 of ASTM Designation 443, latest revision.

Openings in manhole sections for sewer connections shall be cut at the point of manufacture and shall be circular or horseshoe shaped with grooved or roughened surfaces to improve mortar bond.

Manhole bases shall be cast-in-place concrete, reinforced as shown on the Standard Detail Sheet. Manhole bases shall be cast on a minimum of 6 inches of compacted crushed stone.

Manhole channels or inverts (flow lines) shall be preformed and poured with Class "B" concrete to the spring line of the connecting pipe. The finished invert shall be a semi-circular shaped smooth channel directing the flow to the downstream sewer.

Manhole frames and lids shall be of good quality cast iron, conforming to ASTM Designation A48 and as shown on Detail #2 on the Standard Detail Sheet (See Section 2-11 C-1). Unless specifically designated otherwise, manhole castings shall be the non-locking type. The joint between the casting frame and cone section shall be fully mortared or gasketed and coated with butyl rubber or a coal tar epoxy coating upon reaching its final set to because a watertight joint.

Manhole steps shall be made from a steel reinforcing rod encapsulated in a copolymer polypropylene resin. Steps shall be placed as shown on the drawings.



**TABLE 501-1**

| Typical Values of Manning's "n" | | |
|---|---|---|
| *Material* | *Manning's "n"* | *Maximum Velocities (feet/second)* |
| **Closed Conduits** | | |
| Concrete | 0.013 | 10 |
| Vitrified Clay | 0.013 | 10 |
| HDPE | 0.012 | 10 |
| PVC | 0.011 | 10 |
| **Circular CMP, Annular Corrugations, 2 2/3 x ½ inch** | | |
| Unpaved | 0.024 | 7 |
| 25% Paved | 0.021 | 7 |
| 50% Paved | 0.018 | 7 |
| 100% Paved | 0.013 | 7 |
| Concrete Culverts | 0.013 | 10 |
| HDPE or PVC | 0.012 | 10 |
| **Open Channels** | | |
| Concrete, Trowel Finish | 0.013 | 10 |
| Concrete, Broom Finish | 0.015 | 10 |
| Gunite | 0.018 | 10 |
| Riprap Placed | 0.030 | 10 |
| Riprap Dumped | 0.035 | 10 |
| Gabion | 0.028 | 10 |
| New Earth (1) | 0.025 | 4 |
| Existing Earth (2) | 0.030 | 4 |
| Dense Growth of Weeds | 0.040 | 4 |
| Dense Weeds and Brush | 0.040 | 4 |
| Swale with Grass | 0.035 | 4 |

*Source of manning "n" values: NIRPCC Stormwater Drainage Manual, July 1995.*
(1) New earth (uniform, seeded, clay soil)
(2) Existing earth (fairly uniform, with some weeds)



**TABLE 501-2**

| Maximum Distance Between Manholes | |
|---|---|
| Size of Pipe (Inches) | Maximum Distance (Feet) |
| All sizes | 400 |



SECTION 02750 - SEWER TELEVISING

PART 1 - GENERAL

1.1 GENERAL

A. This section covers all work necessary for the cleaning and televising of sanitary and storm sewers to determine the water tightness, connections, alignment, grades and locations of service.

B. The type equipment required for the work and the methods of accomplishing the work, as well as the type of materials to be incorporated into the work, are covered in this Section.

C. The Contractor shall introduce enough water into sewer pipe to indicate bellies or sags in line being televised.

PART 2 - PRODUCTS

2.1 EQUIPMENT REQUIRED

A. The Contractor shall furnish all labor, electronic equipment, and technicians to perform the closed circuit television inspection of the sewers. Operation of the equipment is to be controlled from above ground with a skilled technician at the control panel in the television studio, controlling the movement of the television camera through the sewer in either direction.

B. The color television camera shall be one specifically designed and constructed for the purpose of televising sewers. The color camera shall have a high resolution lens capable of spanning 360 degrees circumference and 270 degrees on horizontal axis to televise sewer lines 8 inches in diameter and larger. Focal distance shall be adjustable through a range of 1 inch to infinity. The purpose of the rotating head camera is to view all service connections and to locate all defects, as well as any questionable problem areas. The camera shall be mounted to a self-propelled crawler/transporter.

C. Camera lighting quality shall be suitable to provide a clear, continuously in focus picture of the entire inside periphery of the sewer pipe for all conditions encountered during the work. The camera shall be able to operate efficiently in 100% humidity conditions. The camera, television monitor, and all other necessary components of the video system shall be capable of producing a minimum 350-line resolution color video picture.



D. The view seen by the television camera shall be transmitted to a VCR and a color monitor of not less than 17 inches. The TV camera shall have the capability of transmitting a color picture with not less than 600 lines of resolution, the monitor and VCR shall have the capability of receiving same. The monitor and VCR shall be located inside a mobile TV studio.

E. Contractor shall supply digital video to client on 700 mb compact disks in the following format:

1. Minimum 640 x 480 pixel dimension
2. Minimum 24 fps (frames per second)
3. Indexed chapters to allow instant access to points of observation
4. Cross-platform compatible to allow for viewing on any operating system

F. The Contractor's mobile studio shall be large enough to accommodate up to three people for the purpose of viewing the monitor while the inspection is in progress. The Westfield Public Works Department or designee shall have access to view the television screen at all times.

G. The Contractor will provide two clear copies of the video/television inspection to the Westfield Public Works Department with complete log sheets.

H. The technician will provide audio input at the time of inspection pointing out cracks, root intrusion, broken tile, infiltration and any other items pertinent to the evaluation of the sewer line.

I. After completion of each section of the sewer inspection, the Contractor shall furnish to the Westfield Public Works Department a computerized report. This report will be generated by an onboard computer and printer and will provide commentary on footi areas. The report will also describe all other pertinent findings regarding service connections, breaks or cracks in pipes, bellies or sags, infiltration, and other items of interest.

PART 3 - EXECUTION

Not Used

END OF SECTION 02750



| DATE | MARK | REVISIONS | BY |
|---|---|---|---|

DAVID J. STOEPPELWERTH
REGISTERED
No. 19358
STATE OF INDIANA
PROFESSIONAL ENGINEER

THIS DRAWING IS NOT INTENDED TO BE REPRESENTED AS A RETRACEMENT OR ORIGINAL BOUNDARY SURVEY, A ROUTE SURVEY OR A SURVEYOR LOCATION REPORT.
CERTIFIED: 2/1/12

STOEPPELWERTH
ALWAYS ON
7965 East 106th Street, Fishers, IN 46038-2505
phone: 317.849.5935 fax: 317.849.5942

CONSTRUCTION SPECIFICATIONS
BRIDGEWATER APARTMENTS
WESTFIELD
HAMILTON COUNTY, INDIANA

DRAWN BY: KRG
CHECKED BY: BKR
SHEET NO. C805
S & A JOB NO. 56030JUSL1

S:\56030JUS-L1\DWG\C805-Specifications.dwg, 1/21/2013 4:50:56 PM, KGilison, 1:1

S:\56030JUS-L1\DWG\Bike Rack Site Plan.dwg, 3/26/2013 10:37:02 AM, kmitchell, 1:1

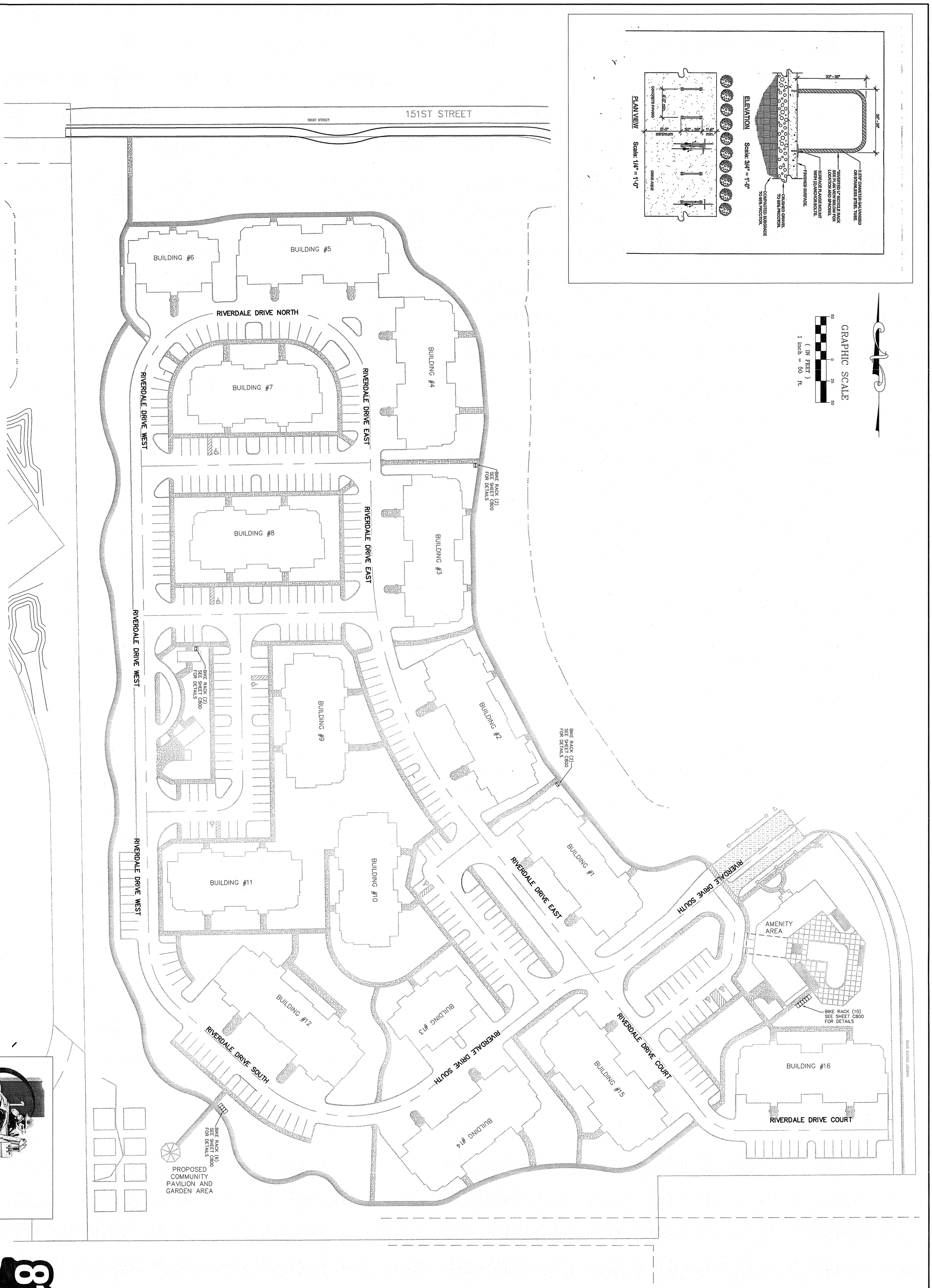


# BIKE RACK SITE PLAN

## BRIDGEWATER APARTMENTS

WESTFIELD — HAMILTON COUNTY, INDIANA

DRAWN BY: KRG
CHECKED BY: BKR
SHEET NO. 1
S & A JOB NO. 56030JUSL1


STOEPPELWERTH
ALWAYS ON
7965 East 106th Street, Fishers, IN 46038-2505
phone: 317.849.5935 fax: 317.849.5942


THIS DRAWING IS NOT INTENDED TO BE REPRESENTED AS A RETRACEMENT OR ORIGINAL BOUNDARY SURVEY, A ROUTE SURVEY OR A SURVEYOR LOCATION REPORT.

CERTIFIED: 2/1/12

David J. Stoeppelwerth

DAVID J. STOEPPELWERTH REGISTERED No. 19358 STATE OF INDIANA PROFESSIONAL ENGINEER

| DATE | MARK | REVISIONS | BY |
|---|---|---|---|