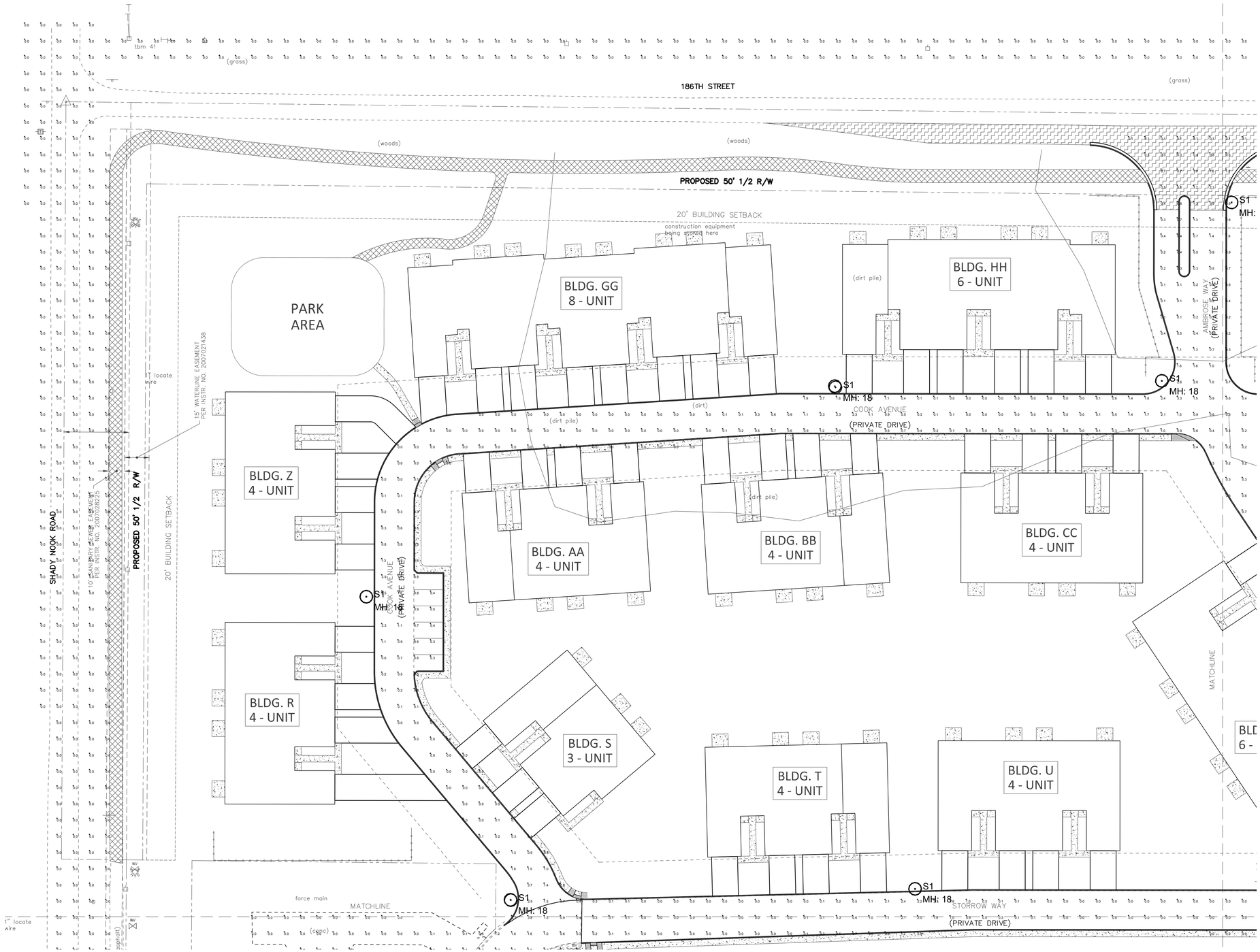

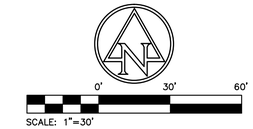

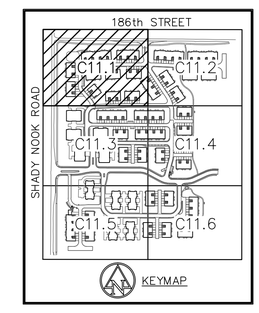

Luminaire Schedule						
Symbol	Qty	Label	Arrangement	Total Lamp Lumens	LLF	Description
⊙	16	S1	SINGLE	17500	0.720	LXS-PT-V-3-175-PSMH-F-MT-COLOR WITH 5RPN-S11G-20-4N-COLOR-DBC
⊙	14	S1-EXIS	SINGLE	17500	0.720	LXS-PT-V-3-175-PSMH-F-MT-COLOR WITH 5RPN-S11G-20-4N-COLOR-DBC

Calculation Summary							
Label	CalcType	Units	Avg	Max	Min	Avg/Min	Max/Min
CalcPts	Illuminance	Fc	0.21	3.9	0.0	N.A.	N.A.
DRIVEWAYS	Illuminance	Fc	0.31	3.9	0.0	N.A.	N.A.
PROP LINE	Illuminance	Fc	0.01	1.6	0.0	N.A.	N.A.
PROPERTY LINE	Illuminance	Fc	0.00	0.2	0.0	N.A.	N.A.

DESIGN NOTES:
1. LIGHT LEVELS ARE MAINTAINED WITH A 0.072 LIGHT LOSS FACTOR
2. LIGHT LEVELS ARE CALCULATED AT GRADE LEVEL
3. POLE HEIGHT = 16'-0"
   BASE HEIGHT = 2'-0"

7205 SHADELAND STATION
INDIANAPOLIS, IN 46256-3957
TEL 317.547.5580 FAX 317.543.0270
www.structurepoint.com
AMERICAN STRUCTUREPOINT INC.

CERTIFIED BY

SITE LIGHTING PLAN

PREPARED FOR:
REDWOOD ACQUISITION, LLC
23775 COMMERCE PARK
BEACHWOOD, OHIO

PROJECT:
REDWOOD AT ANDOVER
186th ST. & SHADY NOOK RD.
WESTFIELD, INDIANA

DATE:	03/29/2013
DRAWN BY:	JDZ
CHK'D BY:	WAB
JOB NO.	2012.01446

REVISIONS	
1 TAC COMMENTS	05/10/2013

SHEET NO.
C11.1
OF

2012.01446.CE.16.C11.1–11.6.SLP.dwg

PRINT DATE: 5/10/13
PLOT SCALE: 1:2.5849
EDIT DATE: 2/19/13 – 2:56 PM EDITED BY: HWINDHORST DRAWING FILE: P:\2012\01446\D. DRAWINGS\CIVIL\PLAN SET\2012.01446.CE.16.C11.1–11.6.SLP.DWG

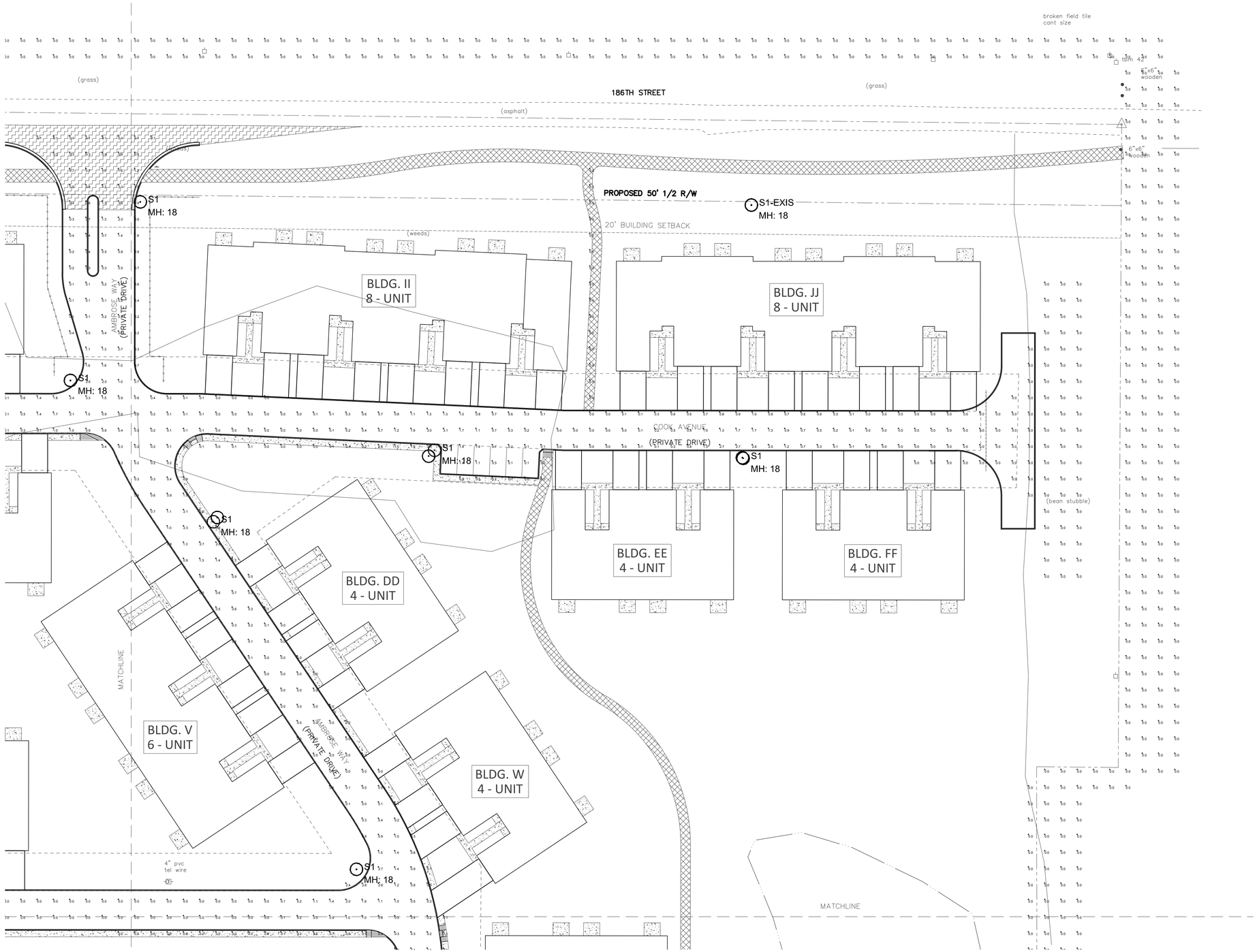

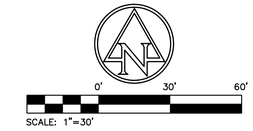

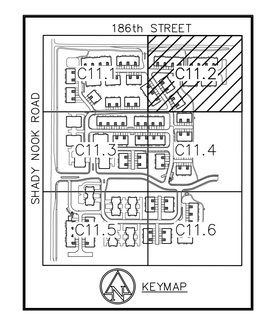

Luminaire Schedule						
Symbol	Qty	Label	Arrangement	Total Lamp Lumens	LLF	Description
⊙	16	S1	SINGLE	17500	0.720	LXS-PT-V-3-175-PSMH-F-MT-COLOR WITH 5RPN-S11G-20-4N-COLOR-DBC
⊙	14	S1-EXIS	SINGLE	17500	0.720	LXS-PT-V-3-175-PSMH-F-MT-COLOR WITH 5RPN-S11G-20-4N-COLOR-DBC

Calculation Summary							
Label	CalcType	Units	Avg	Max	Min	Avg/Min	Max/Min
CalcPts	Illuminance	Fc	0.21	3.9	0.0	N.A.	N.A.
DRIVEWAYS	Illuminance	Fc	0.31	3.9	0.0	N.A.	N.A.
PROP LINE	Illuminance	Fc	0.01	1.6	0.0	N.A.	N.A.
PROPERTY LINE	Illuminance	Fc	0.00	0.2	0.0	N.A.	N.A.

DESIGN NOTES:
1. LIGHT LEVELS ARE MAINTAINED WITH A 0.072 LIGHT LOSS FACTOR
2. LIGHT LEVELS ARE CALCULATED AT GRADE LEVEL
3. POLE HEIGHT = 16'-0"
   BASE HEIGHT = 2'-0"

7243 SHADELAND STATION
INDIANAPOLIS, IN 46256-3957
TEL 317.547.5580 FAX 317.543.0270
www.structurepoint.com
AMERICAN STRUCTUREPOINT INC.

CERTIFIED BY

SITE LIGHTING PLAN

PREPARED FOR:
REDWOOD ACQUISITION, LLC
23775 COMMERCE PARK
BEACHWOOD, OHIO

PROJECT:
REDWOOD AT ANDOVER
186th ST. & SHADY NOOK RD.
WESTFIELD, INDIANA

DATE:	03/29/2013
DRAWN BY:	JDZ
CHK'D BY:	WAB
JOB NO.	2012.01446

REVISIONS	
1 TAC COMMENTS	05/10/2013

SHEET NO.
C11.2
OF

2012.01446.CE.16.C11.1–11.6.SLP.dwg

PRINT DATE: 5/10/13
PLOT SCALE: 1:2.5849
EDIT DATE: 2/19/13 – 2:56 PM
EDITED BY: HWINDHORST
DRAWING FILE: P:\2012\01446\D. DRAWINGS\CIVIL\PLAN SET\2012.01446.CE.16.C11.1–11.6.SLP.DWG

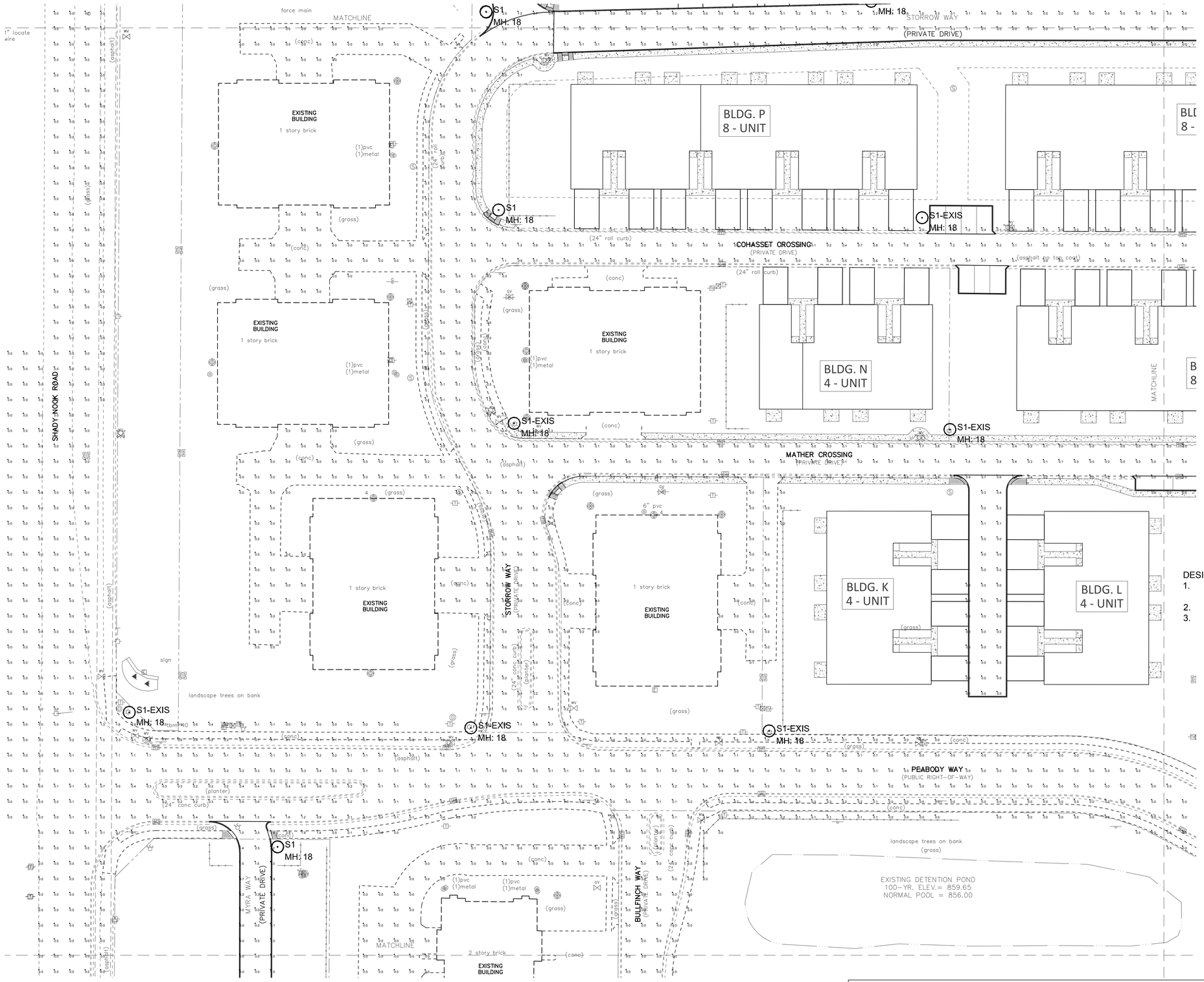

SCALE: 1"=30'

DESIGN NOTES:
1. LIGHT LEVELS ARE MAINTAINED WITH A 0.072 LIGHT LOSS FACTOR
2. LIGHT LEVELS ARE CALCULATED AT GRADE LEVEL
3. POLE HEIGHT = 16'-0"
   BASE HEIGHT = 2'-0"

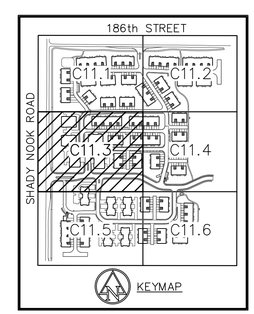

Luminaire Schedule						
Symbol	Qty	Label	Arrangement	Total Lamp Lumens	LLF	Description
	16	S1	SINGLE	17500	0.720	LXS-PT-V-3-175-PSMH-F-MT-COLOR WITH 5RPN-S11G-20-4N-COLOR-DBC
	14	S1-EXIS	SINGLE	17500	0.720	LXS-PT-V-3-175-PSMH-F-MT-COLOR WITH 5RPN-S11G-20-4N-COLOR-DBC

Calculation Summary							
Label	CalcType	Units	Avg	Max	Min	Avg/Min	Max/Min
CalcPts	Illuminance	Fc	0.21	3.9	0.0	N.A.	N.A.
DRIVEWAYS	Illuminance	Fc	0.31	3.9	0.0	N.A.	N.A.
PROP LINE	Illuminance	Fc	0.01	1.6	0.0	N.A.	N.A.
PROPERTY LINE	Illuminance	Fc	0.00	0.2	0.0	N.A.	N.A.

7265 SHADELAND STATION
INDIANAPOLIS, IN 46256-3957
TEL 317.547.5580 FAX 317.543.0270
www.structurepoint.com
AMERICAN STRUCTUREPOINT INC.

CERTIFIED BY

SITE LIGHTING PLAN

PREPARED FOR:
REDWOOD ACQUISITION, LLC
23775 COMMERCE PARK
BEACHWOOD, OHIO

PROJECT:
REDWOOD AT ANDOVER
186th ST. & SHADY NOOK RD.
WESTFIELD, INDIANA

DATE:	03/29/2013
DRAWN BY:	JDZ
CHK'D BY:	WAB
JOB NO.	2012.01446

REVISIONS	
1 TAC COMMENTS	05/10/2013

SHEET NO.
C11.3
OF

2012.01446.CE.16.C11.1–11.6.SLP.dwg

PRINT DATE: 5/10/13
PLOT SCALE: 1:2.5849
EDIT DATE: 2/19/13 – 2:56 PM EDITED BY: HWINDHORST DRAWING FILE: P:\2012\01446\D. DRAWINGS\CIVIL\PLAN SET\2012.01446.CE.16.C11.1–11.6.SLP.DWG

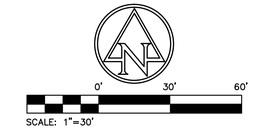

DESIGN NOTES:
1. LIGHT LEVELS ARE MAINTAINED WITH A 0.072 LIGHT LOSS FACTOR
2. LIGHT LEVELS ARE CALCULATED AT GRADE LEVEL
3. POLE HEIGHT = 16'-0"
   BASE HEIGHT = 2'-0"

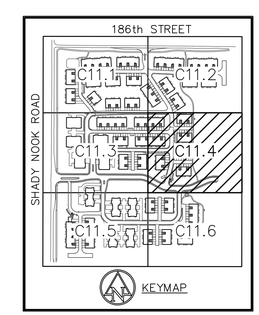

Luminaire Schedule						
Symbol	Qty	Label	Arrangement	Total Lamp Lumens	LLF	Description
	16	S1	SINGLE	17500	0.720	LXS-PT-V-3-175-PSMH-F-MT-COLOR WITH 5RPN-S11G-20-4N-COLOR-DBC
	14	S1-EXIS	SINGLE	17500	0.720	LXS-PT-V-3-175-PSMH-F-MT-COLOR WITH 5RPN-S11G-20-4N-COLOR-DBC

Calculation Summary							
Label	CalcType	Units	Avg	Max	Min	Avg/Min	Max/Min
CalcPts	Illuminance	Fc	0.21	3.9	0.0	N.A.	N.A.
DRIVEWAYS	Illuminance	Fc	0.31	3.9	0.0	N.A.	N.A.
PROP LINE	Illuminance	Fc	0.01	1.6	0.0	N.A.	N.A.
PROPERTY LINE	Illuminance	Fc	0.00	0.2	0.0	N.A.	N.A.

7243 SHADELAND STATION
INDIANAPOLIS, IN 46256-3957
TEL 317.547.5580 FAX 317.543.0270
www.structurepoint.com
AMERICAN STRUCTUREPOINT INC.

CERTIFIED BY

SITE LIGHTING PLAN

PREPARED FOR:
REDWOOD ACQUISITION, LLC
23775 COMMERCE PARK
BEACHWOOD, OHIO

PROJECT:
REDWOOD AT ANDOVER
186th ST. & SHADY NOOK RD.
WESTFIELD, INDIANA

DATE:	03/29/2013
DRAWN BY:	JDZ
CHK'D BY:	WAB
JOB NO.	2012.01446

REVISIONS	
1 TAC COMMENTS	05/10/2013

SHEET NO.
C11.4
OF

2012.01446.CE.16.C11.1–11.6.SLP.dwg

PRINT DATE: 5/10/13
PLOT SCALE: 1:2.5849
EDIT DATE: 2/19/13 – 2:56 PM EDITED BY: HWINDHORST DRAWING FILE: P:\2012\01446\D. DRAWINGS\CIVIL\PLAN SET\2012.01446.CE.16.C11.1–11.6.SLP.DWG

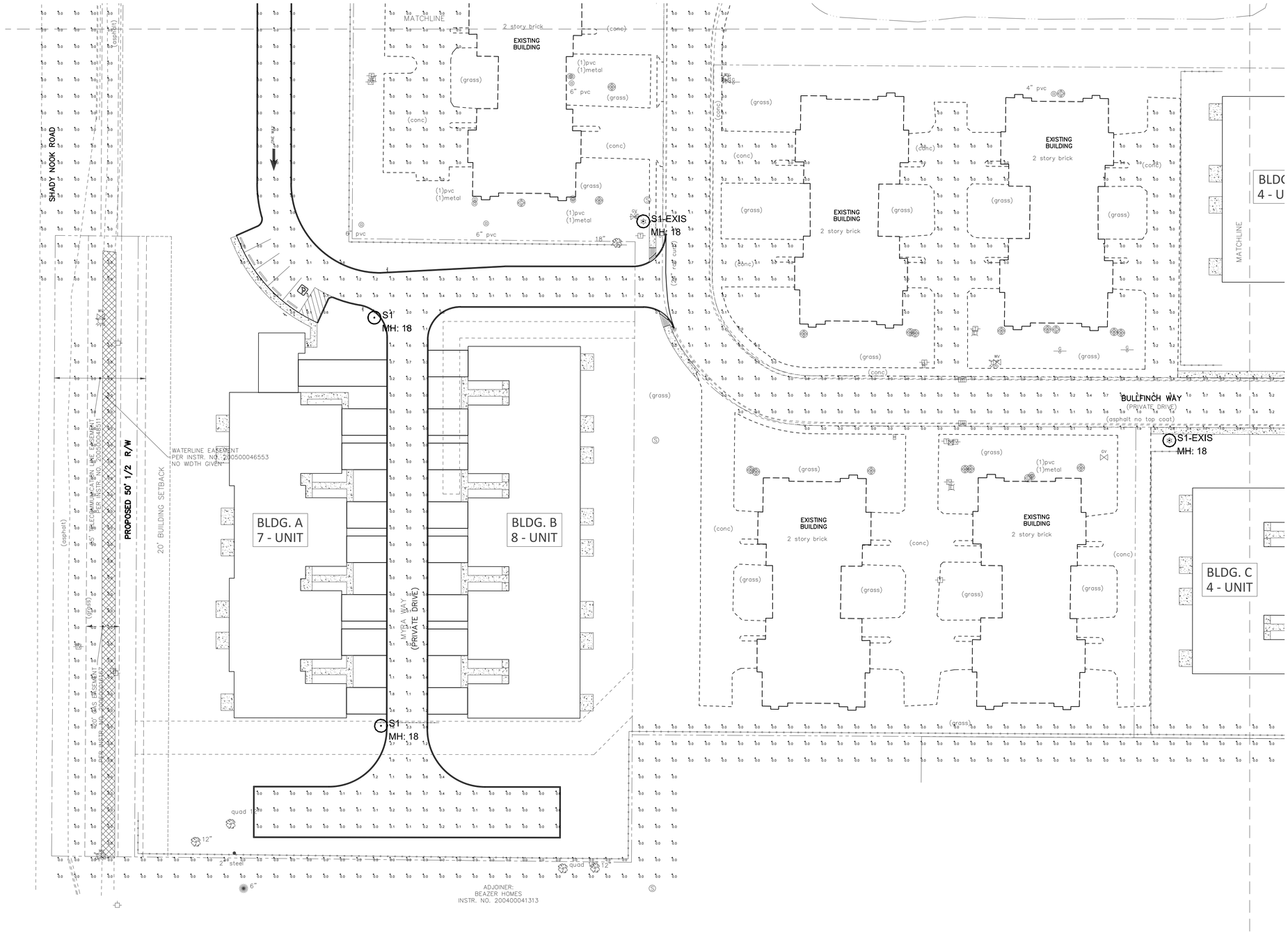

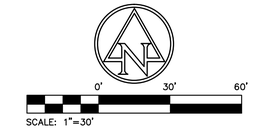

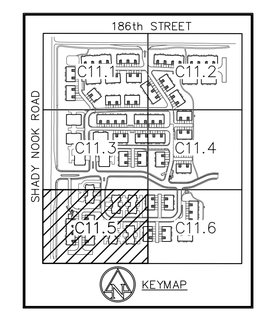

Luminaire Schedule						
Symbol	Qty	Label	Arrangement	Total Lamp Lumens	LLF	Description
⊙	16	S1	SINGLE	17500	0.720	LXS-PT-V-3-175-PSMH-F-MT-COLOR WITH 5RPN-S11G-20-4N-COLOR-DBC
⊙	14	S1-EXIS	SINGLE	17500	0.720	LXS-PT-V-3-175-PSMH-F-MT-COLOR WITH 5RPN-S11G-20-4N-COLOR-DBC

Calculation Summary							
Label	CalcType	Units	Avg	Max	Min	Avg/Min	Max/Min
CalcPts	Illuminance	Fc	0.21	3.9	0.0	N.A.	N.A.
DRIVEWAYS	Illuminance	Fc	0.31	3.9	0.0	N.A.	N.A.
PROP LINE	Illuminance	Fc	0.01	1.6	0.0	N.A.	N.A.
PROPERTY LINE	Illuminance	Fc	0.00	0.2	0.0	N.A.	N.A.

DESIGN NOTES:
1. LIGHT LEVELS ARE MAINTAINED WITH A 0.072 LIGHT LOSS FACTOR
2. LIGHT LEVELS ARE CALCULATED AT GRADE LEVEL
3. POLE HEIGHT = 16'-0"
   BASE HEIGHT = 2'-0"

7205 SHADELAND STATION
INDIANAPOLIS, IN 46256-3957
TEL 317.547.5580 FAX 317.543.0270
www.structurepoint.com
AMERICAN STRUCTUREPOINT INC.

CERTIFIED BY

SITE LIGHTING PLAN

PREPARED FOR:
REDWOOD ACQUISITION, LLC
23775 COMMERCE PARK
BEACHWOOD, OHIO

PROJECT:
REDWOOD AT ANDOVER
186th ST. & SHADY NOOK RD.
WESTFIELD, INDIANA

DATE:	03/29/2013
DRAWN BY:	JDZ
CHK'D BY:	WAB
JOB NO.	2012.01446

REVISIONS	
1 TAC COMMENTS	05/10/2013

SHEET NO.
C11.5
OF

2012.01446.CE.16.C11.1–11.6.SLP.dwg

PRINT DATE: 5/10/13
PLOT SCALE: 1:2.5849 EDIT DATE: 2/19/13 – 2:56 PM EDITED BY: HWINDHORST DRAWING FILE: P:\2012\01446\D. DRAWINGS\CIVIL\PLAN SET\2012.01446.CE.16.C11.1–11.6.SLP.DWG

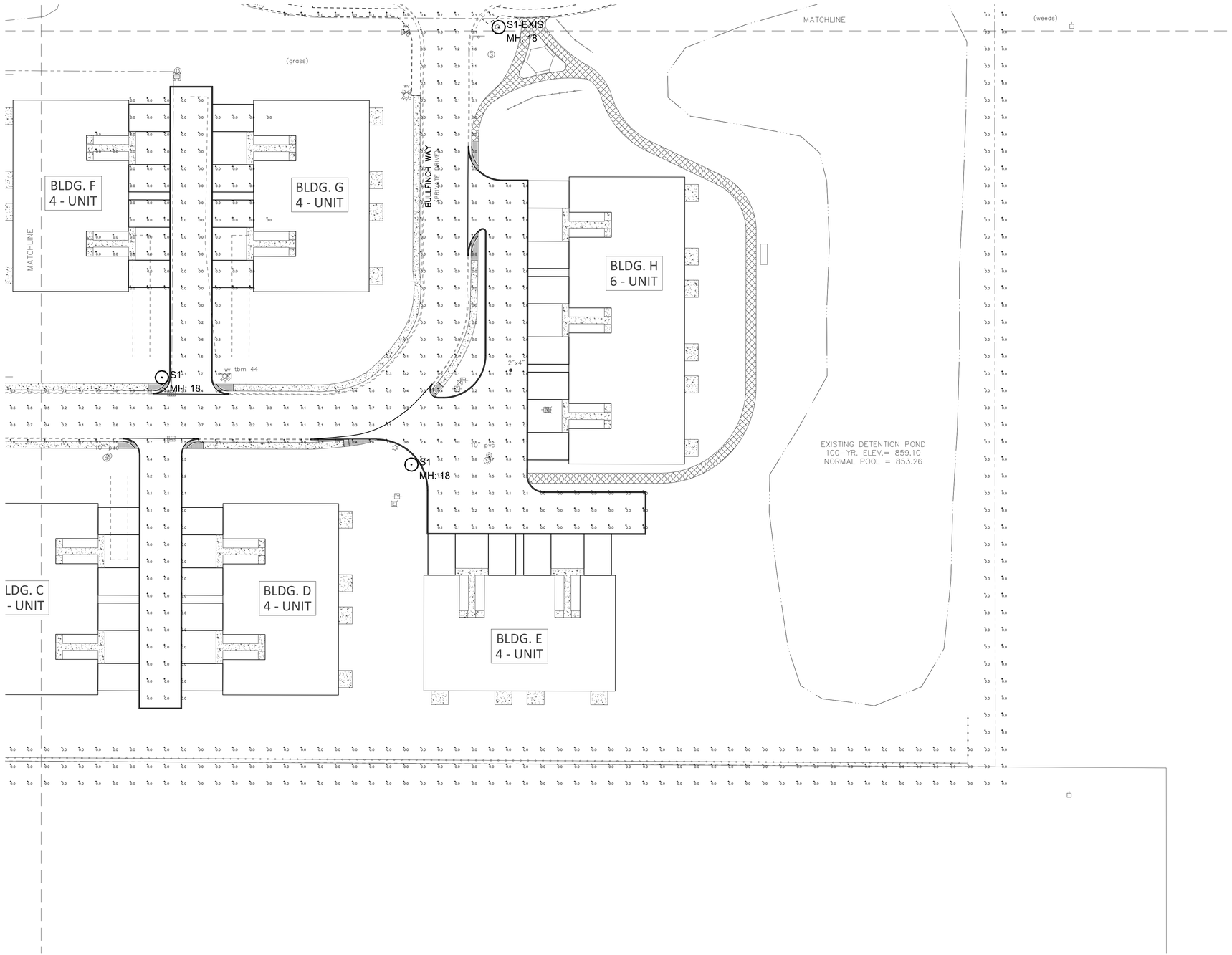

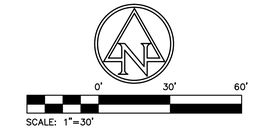

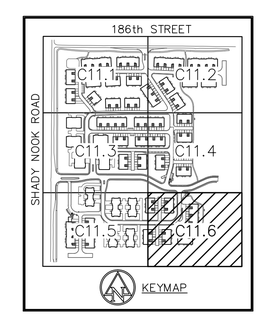

Luminaire Schedule						
Symbol	Qty	Label	Arrangement	Total Lamp Lumens	LLF	Description
⊙	16	S1	SINGLE	17500	0.720	LXS-PT-V-3-175-PSMH-F-MT-COLOR WITH 5RPN-S11G-20-4N-COLOR-DBC
⊙	14	S1-EXIS	SINGLE	17500	0.720	LXS-PT-V-3-175-PSMH-F-MT-COLOR WITH 5RPN-S11G-20-4N-COLOR-DBC

Calculation Summary							
Label	CalcType	Units	Avg	Max	Min	Avg/Min	Max/Min
CalcPts	Illuminance	Fc	0.21	3.9	0.0	N.A.	N.A.
DRIVEWAYS	Illuminance	Fc	0.31	3.9	0.0	N.A.	N.A.
PROP LINE	Illuminance	Fc	0.01	1.6	0.0	N.A.	N.A.
PROPERTY LINE	Illuminance	Fc	0.00	0.2	0.0	N.A.	N.A.

DESIGN NOTES:
1. LIGHT LEVELS ARE MAINTAINED WITH A 0.072 LIGHT LOSS FACTOR
2. LIGHT LEVELS ARE CALCULATED AT GRADE LEVEL
3. POLE HEIGHT = 16'-0"
   BASE HEIGHT = 2'-0"

7265 SHADELAND STATION
INDIANAPOLIS, IN 46256-1957
TEL 317.547.5580 FAX 317.543.0270
www.structurepoint.com
AMERICAN STRUCTUREPOINT INC.

CERTIFIED BY

SITE LIGHTING PLAN

PREPARED FOR:
REDWOOD ACQUISITION, LLC
23775 COMMERCE PARK
BEACHWOOD, OHIO

PROJECT:
REDWOOD AT ANDOVER
186th ST. & SHADY NOOK RD.
WESTFIELD, INDIANA

DATE:	03/29/2013
DRAWN BY:	JDZ
CHK'D BY:	WAB
JOB NO.	2012.01446

REVISIONS	
1 TAC COMMENTS	05/10/2013

SHEET NO.
C11.6
OF

2012.01446.CE.16.C11.1–11.6.SLP.dwg

PRINT DATE: 5/10/13
PLOT SCALE: 1:2.5849 EDIT DATE: 2/19/13 – 2:56 PM EDITED BY: HWINDHORST DRAWING FILE: P:\2012\01446\D. DRAWINGS\CIVIL\PLAN SET\2012.01446.CE.16.C11.1–11.6.SLP.DWG

ALUMINUM ROUND POLES

DIMENSIONS

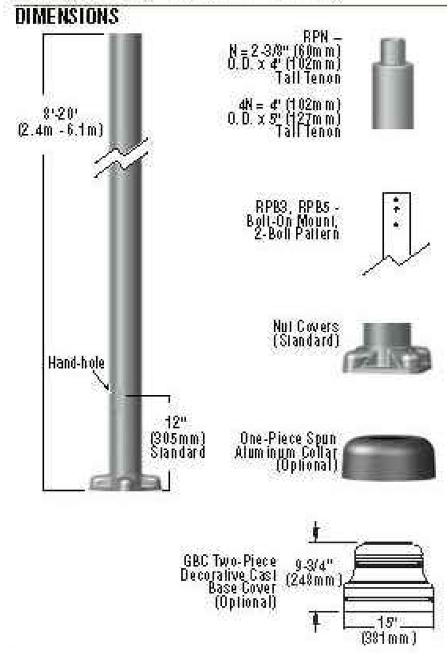

POLE SHAFT - The pole shaft is extruded from seamless alloy aluminum. On tenon mount poles, tenon is of high-strength pipe. Tenon N option is 2-3/8" O.D. x 4" tall. Tenon 4N option is 4" O.D. x 5" tall. Aluminum round poles are 4" and 5" in diameter.

HAND HOLE - Covered and gasketed 2" x 4" non-reinforced hand-hole is located 12" above bottom of pole base. For pole with greater EPA rating, reinforced hand hole is available as an option; consult factory. Optional festoon for GFI receptacle (with or without GFI Kit supplied) is available. Minimum height for location of festoon is 18" above standard hand hole.

BASE - Pole base is cast from 356 alloy aluminum. Completed assembly is heat-treated to a T6 temper. Aluminum nut covers are included with anchor base.

BASE COVERS - Aluminum nut covers are included with anchor base. Optional two-piece decorative die-cast aluminum (GBC) base covers or optional one-piece spun aluminum collars are available. Must be ordered separately.

ANCHOR BOLTS - Set of four anchor bolts conform to ASTM F1554 Grade 55. Each bolt is provided with two hex nuts and two flat washers. Bolts have an "L" bend on one end and are galvanized a minimum of 12" on the threaded end.

GROUND LUG - Ground lug is standard.

GROUND FAULT CIRCUIT INTERRUPTER - Ground fault circuit interrupter kit is optional. Pole Preparation (festoon) with GFI Kit must be ordered. Specify location in feet above base of pole and side orientation. Minimum height for location of festoon is 18" above standard hand hole.

FINISHES - Baked-on polyester-powder finish provides one year limited warranty.

DETERMINING THE LUMINAIRE/POLE COMBINATION FOR YOUR APPLICATION:

- Select luminaire from luminaire ordering information
- Select bracket configuration if required
- Determine EPA value from luminaire/bracket EPA chart
- Select pole height
- Select MPH to match wind speed in the application area (See windspeed map).
- Confirm pole EPA equal to or exceeding value from note above
- Confirm total luminaire/bracket weight does not exceed maximum weight shown in chart below
- Consult factory for special wind load requirements and banner brackets

DRILLING LOCATIONS

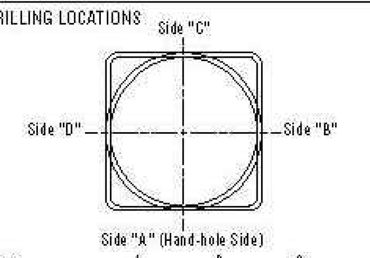

Sides	A	B	C	D
Hand-hole	X			
Single	X			
D180°		X		X
D90°	X			X
T90°	X	X		X
TN120°*	X			
Q90°	X	X	X	X

*Other two locations will be 120° to the left and right side of A.

POLE SELECTION CHART: 4" (102mm) and 5" (127mm) aluminum round poles

Height	EPA 70 MPH	EPA 80 MPH	EPA 90 MPH	EPA 100 MPH	Outside Dimensions	Material	Max Weight (lbs)[1]	Bolt Circle	Structure Weight (lbs)[2]
8' (2.4m)	10.7	7.9	6.0	4.7	4' (102mm)	0.125	75	E	19
10' (3.0m)	8.1	5.9	4.3	3.3	4' (102mm)	0.125	75	E	22
10' (3.0m)	15.4	11.5	8.9	7.1	5' (127mm)	0.125	100	F	27
12' (3.7m)	6.2	4.3	3.0	2.2	4' (102mm)	0.125	75	E	26
12' (3.7m)	12.2	9.0	6.9	5.5	5' (127mm)	0.125	100	F	32
12' (3.7m)	15.5	11.5	8.9	7.1	5' (127mm)	0.156	100	F	38
12' (3.7m)	18.8	14.0	10.9	8.7	5' (127mm)	0.188	100	F	46
14' (4.3m)	4.6	3.0	1.9	1.2	4' (102mm)	0.125	100	E	30
14' (4.3m)	9.7	6.9	5.3	4.1	5' (127mm)	0.125	100	F	36
14' (4.3m)	12.5	9.1	7.0	5.5	5' (127mm)	0.156	100	F	44
14' (4.3m)	15.3	11.2	8.7	6.9	5' (127mm)	0.188	100	F	52
16' (4.9m)	3.2	1.9	1.0	0.5	4' (102mm)	0.125	100	E	33
16' (4.9m)	7.4	5.1	3.8	3.0	5' (127mm)	0.125	100	F	41
16' (4.9m)	9.8	6.9	5.3	4.1	5' (127mm)	0.156	100	F	50
16' (4.9m)	12.2	8.7	6.7	5.3	5' (127mm)	0.188	100	F	58
18' (5.5m)	5.6	3.7	2.7	2.0	5' (127mm)	0.125	100	F	45
18' (5.5m)	7.7	5.2	3.9	3.0	5' (127mm)	0.156	100	F	55
18' (5.5m)	9.7	6.8	5.1	4.0	5' (127mm)	0.188	100	F	65
20' (6.1m)	4.1	2.4	1.7	1.2	5' (127mm)	0.125	100	F	50
20' (6.1m)	5.9	3.8	2.8	2.0	5' (127mm)	0.156	100	F	61
20' (6.1m)	7.6	5.2	3.8	2.9	5' (127mm)	0.188	100	F	72

EPA based on AASHTO LTS-3-94. For applications in Canada, areas using code requirements other than AASHTO LTS-3-94, and for banner brackets, consult factory. Designs are limited to top-mounted and side-mount luminaires. Variations from sizes above are available, consult factory. Satisfactory performance of poles is dependent upon the pole being properly attached to a supporting foundation of adequate design. Refer to EPA information on next page. Maximum luminaire/bracket weight is shown on the above chart.

1- Maximum weight of fixtures/brackets to be mounted to pole.
2- Structure weight is a nominal value which includes the pole shaft and base plate.

ARRA Funding Compliant — American Innovation American Made

Project Name ______ Fixture Type ______
Catalog # ______

© 2012 LSI INDUSTRIES INC.

ALUMINUM ROUND POLES

POLE ORDERING INFORMATION

TYPICAL ORDER EXAMPLE: 5RPB5 A188 20 S BRZ

Pole Series	Material	Height[3]	Mounting Configuration	Pole Finish	Options
Bolt-On Mount[1] - See selection guide following Steel Round Tapered Poles data sheet for patterns and fixture matches. 4RPB3 - 3' Reduced Drilling Pattern 5RPB3 - 3' Reduced Drilling Pattern 4RPB5 - 5' Traditional Drilling Pattern 5RPB5 - 5' Traditional Drilling Pattern	A125 - .125 Aluminum A156 - .156 Aluminum A188 - .188 Aluminum	8' 10' 12' 14' 16' 18' 20'	S - Single/Parallel D180° - Double D90° - Double T90° - Triple TN120° - Triple Q90° - Quad	BRZ – Bronze BLK – Black WHT – White SVG - Satin Verde Green MSV - Metallic Silver	RHH - Reinforced Hand Hole[4] FP - Festoon Outlet Provision Less GFI Kit[5] FPG - Festoon Outlet Provision With GFI Kit[5] LAB - Less Anchor Bolts
Tenon Mount - See selection guide following Steel Round Tapered Poles data page for tenon and fixture/bracket matches. 4RPN 5RPN[2]			N – Tenon Mount 4N - Tenon Mount (Available with 5RPN only. For 4" poles, use 4RPSF below)		
Greenlee Slipfit - Use with Greenlee Lifestyle CC, SC & CH mounting styles. Enterprise Intrepid & Lexington PT single mounting styles [2] 4RPSF	Consult Pole Selection Chart on opposite page		*		
Greenlee Universal Bracket[1] (No Drilling) - Use with Lifestyle UCLS and UCLD180 4RPI 5RPI					

FOOTNOTES:
1 - Standard pole cap provided. Domed Greenlee pole cap will ship with SA4 and SA5 Enterprise, Intrepid and Lexington fixtures, SA Lifestyle fixtures, BK SPT BO, BK MPT BO and UCL brackets.
2 - For Enterprise, Intrepid and Lexington D180° or other mounting configuration styles using BK SPT BO and BK MPT BO accessories, order 4RPB3 or 5RPB3 pole.
3 - Pole heights will have +/- 2" tolerance.
4 - Reinforced hand-holes are 2-3/8" x 4" on 4" dia. round poles and 3" x 5" on 5" dia. round poles. Both are located 18" above bottom of pole base.
5 - Specify location in feet above base of pole and side orientation. Minimum height is 18" above standard hand hole.

ACCESSORY ORDERING INFORMATION (Accessories are field installed)

Description	Order Number
4 / 5 GBC - Decorative Base Cover	483859C LR
4RSAC - 4" Round 1-Piece Spun Aluminum Collar	506859C LR
5RSAC - 5" Round 1-Piece Spun Aluminum Collar	506860C LR
BBB - Breakaway Banner Brackets+	Consult Factory+

+Banner Brackets will add EPA to pole.

BOLT CIRCLE

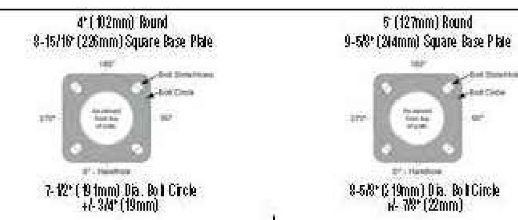

	E	F
Bolt Circle	7-1/2" +/- 3/4" (191mm +/- 19mm)	3-5/8" +/- 7/8" (2'9mm +/- 22mm)
Anchor Bolt Size	3/4" dia. x 17" x 3" hook (19mm x 432mm x 76 mm)	3/4" dia. x 17" x 3" hook (19mm x 432mm x 76mm)
Anchor Bolt Projection	3-1/4" (83mm)	3-1/4" (83mm)
Base Plate Dimensions	8-15/16" sq. x 5/8" thk. (226mm x 16mm)	9-5/8" sq. x 5/8" thk. (244mm x 16mm)

Note: Base plate illustrations may change without notice. Do not use for setting anchor bolts. Consult factory for the base plate templates.

EPA INFORMATION

All poles are guaranteed to meet the EPA requirements listed. Pole manufacturer is not responsible if a pole order has a lower EPA rating than the indicated wind-loading zone where the pole will be located.
CAUTION: This guarantee does not apply if the pole/bracket/fixture combination is used to support any other items such as flags, pennants, or signs, which would add stress to the pole. Pole manufacturer cannot accept responsibility for harm or damage caused in these situations.

NOTE: Pole calculations include a 1.3 gust factor over steady wind velocity. Example: poles designed to withstand 80 MPH steady wind will withstand gusts to 104 MPH. EPA's are for locations 100 miles away from hurricane ocean lines. Consult LSI for other areas. Note: Hurricane ocean lines are the Atlantic and Gulf of Mexico coastal areas. For applications in Canada, areas using code requirements other than AASHTO LTS-3-94, and for banner brackets, consult factory.

Project Name ______ Fixture Type ______
Catalog # ______

© 2012 LSI INDUSTRIES INC.

LEXINGTON (Various reflectors are protected by U.S. Patent No. 6,464,378.)

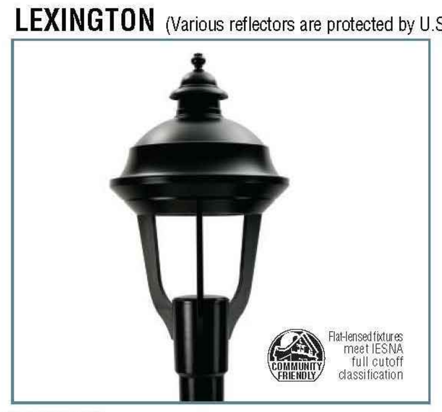

HOUSING - Modular fixture is available in small or medium sizes. One piece housing / support frame is die-cast aluminum. Pole top ballast enclosure, access cover and support arms are die-cast aluminum. Housing is sealed with an extruded silicone gasket.

HOUSING TOP CAP: Removable spun aluminum cap, which provides "Top Access" for relamping, is retained by captive stainless steel fasteners and safety cables. Housing and top cap interface is sealed with a one-piece extruded silicone gasket. Tool-less entry option is available.

LENS: Lens is flat tempered glass, which is sealed to the die-cast aluminum housing with an extruded, high temperature, silicone gasket and retained internally by zinc plated steel clips.

LAMPHOLDER: Matched to the lamp. Glazed porcelain in either medium or mogul base, 4KV pulse rated, with spring center contact. CFL fixtures have a one piece, 4-pin, thermoplastic lampholder.

LIGHT SOURCES: Pulse-Start Metal Halide, Pulse-Start Metal Halide Reduced Envelope, Ceramic Metal Halide, Metal Halide, High Pressure Sodium, and CFL-Compact Fluorescent. Lamps supplied as standard - HID - clear and compact fluorescent coated, 3500K.

BALLASTS: Ballast is mounted on removable power tray. Tool-less option is available. Electronic HID and dimmable electronic HID ballasts are available in select wattages for 120-277V current or 200-277V current (see ordering chart). Core and coil ballasts are high-power factor designed for -20°F operation. Terminal block, for easy wiring, is standard with all magnetic ballast types. CFL ballasts are universal electronic, with 0°F starting, which accommodate current from 120-277V in either 50HZ or 60HZ for worldwide operation.

OPTICS: Four available distributions – Type II, III, V, and FT-Forward Throw for perimeter applications. Reflectors may be rotated in 90° increments. Lamps may be vertically or horizontally oriented.

FASTENERS: All exposed fasteners are black oxide coated stainless steel. Internal fasteners are stainless steel or zinc electro-plated steel.

FINISH: Fixtures are finished with LSI's DuraGrip® polyester powder coat finishing process. The DuraGrip finish withstands extreme weather changes without cracking or peeling, and is guaranteed for five full years. Standard colors include bronze, black, platinum plus, graphite, satin verde green, metallic silver and white.

SHIELDING: Internal house side shields for small and medium are available.

PHOTOMETRICS - Please visit our web site at: **www.lsi-industries.com** for detailed photometric data.

DIMENSIONS

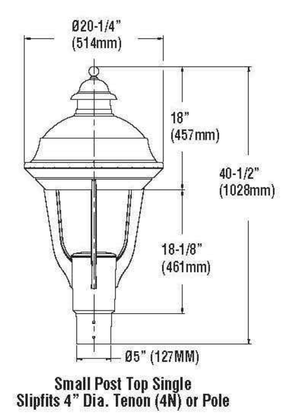

Small Post Top Single
Slipfits 4" Dia. Tenon (4N) or Pole

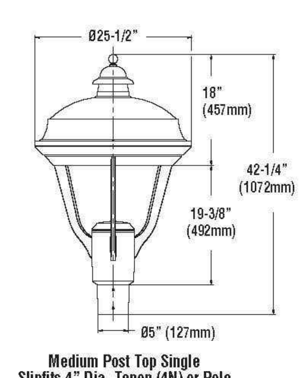

Medium Post Top Single
Slipfits 4" Dia. Tenon (4N) or Pole

cULus LISTED wet location — IP65 — ARRA Funding Compliant — American Innovation American Made

Also available in LED

SHIPPING WEIGHTS - Lexington	
Catalog Number	Est. Weight (kg/lbs.)
LXS (PT)	20/45
LXM (PT)	29/65

Project Name ______ Fixture Type ______
Catalog # ______

© 2012 LSI INDUSTRIES INC.

LEXINGTON

LUMINAIRE ORDERING INFORMATION

TYPICAL ORDER EXAMPLE: LXS PT H 5 100MH F MT MSV SQT

Luminaire Prefix	Mounting Style	Orientation	Optics	Lamp Wattage	Light Source	Lens	Voltage	Luminaire Finish	Options
LXS Small	PT - Post Top	H - Horizontal[1] V - Vertical[2]	2 - Type II 3 - Type III FT - Forward Throw 5 - Type V	39 50 70 100 150 175	PSMH - Pulse-Start Metal Halide[1] 175 Watt CMH - Ceramic Metal Halide[3] 150 Watt MH - Metal Halide 39[4], 50[4], 70, 100, 150 Watt HPS - High Pressure Sodium 50[4,5], 70, 100, 150 Watt	F - Flat	MT TT[5] 480[4]	BRZ – Bronze BLK – Black PLP – Platinum Plus WHT – White SVG - Satin Verde Green GPT - Graphite MSV - Metallic Silver	SQN - Standby Quartz (Non-Time Delay) SQT - Standby Quartz (Time Delay) PC120 - 120V Photocell PCHV - 208-277V Photocell PC347 - 347V Photocell TE - Tool-less Entry LL - Less Lamp
				39, 50, 70, 100, 150 Watt	EMH - Electronic Metal Halide[6]		UE (120-277) UEDIM(120-277)		**Accessories**
			5 - Type V - Only	26 32 42 57	CFL - Compact Fluorescent[2] Single 26, 32, 42, 57 Watt CFL2 - Compact Fluorescent[2] Double 26, 32, 42 Watt		UE(120-277)	MT – Multi Tap consists of 120V, 208V, 240V and 277V and is prepared for highest voltage. Alternate voltages will require field adjustment.	FK120, FK277, FK347 - Single fusing DFK208, DFK240, DFK480 - Double fusing IHSS - Internal House Side Shield WM - Wall Mount (PT only)
LXM Medium			2 - Type II 3 - Type III FT - Forward Throw 5 - Type V	200 250 320 350 400	PSMH - Pulse-Start Metal Halide 200, 250, 320, 350 Watt PSMHR - Pulse-Start Metal Halide Reduced 400 Watt HPS - High Pressure Sodium 250, 400 Watt		MT TT 480	TT – Tri-Tap consists of 120V, 277V and 347V and is shipped standard for Canadian applications and is prepared for highest voltage. Alternate voltages will require field adjustment.	BK SPT B04 - Small Bolt on Arm Bracket (for PT 180) For 4" Dia. Round Poles[8] BK SPT B05 - Small Bolt on Arm Bracket (for PT 180) For 5" Dia. Round Poles[8] BK MPT B04 - Medium Bolt on Bracket (for PT 180) For 4" Dia. Round Poles[8] BK MPT B05 - Medium Bolt on Bracket (for PT 180) For 5" Dia. Round Poles[8]
					EPSMH - Electronic Pulse-Start Metal Halide[7] 250, 320, 350 Watt EPSMHR - Electronic Pulse-Start Metal Halide Reduced[7] 400 Watt		UE (200-277) UEDIM(200-277)		

FOOTNOTES:
1- 175 Watt PSMH available with vertical orientation only
2- CFL & CFL2 light source available with horizontal orientation only.
3- Provided with Ceramic Metal Halide lamp.
4- 480 volt not available in 39MH, 50MH, or 50HPS.
5- TT not available in 50HPS.
6- Metal Halide lamp with electronic ballast.
7- Pulse-Start Metal Halide lamp with electronic ballast.
8- For correct mounting, order LSI poles with 3" reduced drilling pattern. For mounting configurations other than D180, consult factory. Order one bracket per fixture.

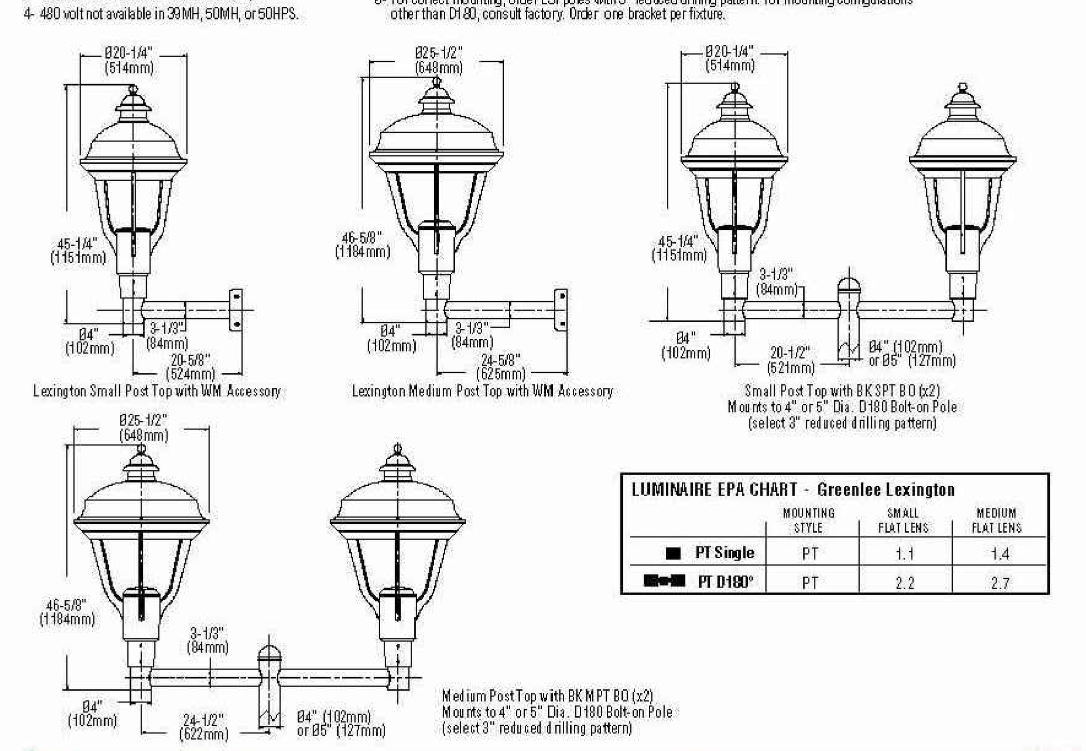

LUMINAIRE EPA CHART - Greenlee Lexington

	MOUNTING STYLE	SMALL FLAT LENS	MEDIUM FLAT LENS
PT Single	PT	1.1	1.4
PT D180°	PT	2.2	2.7

Project Name ______ Fixture Type ______
Catalog # ______

© 2012 LSI INDUSTRIES INC.

FOR PRICING INFORMATION, CONTACT CORBIN WAMPLER AT CBMC LIGHTING SOLUTIONS. 317-695-0782

AMERICAN STRUCTUREPOINT INC.
7260 SHADELAND STATION
INDIANAPOLIS, IN 46256-3957
TEL 317.547.5580 FAX 317.543.0270
www.structurepoint.com

CERTIFIED BY

SITE LIGHTING DETAILS

PROJECT:
REDWOOD AT ANDOVER
186th ST. & SHADY NOOK RD.
WESTFIELD, INDIANA

PREPARED FOR:
REDWOOD ACQUISITION, LLC
23775 COMMERCE PARK
BEACHWOOD, OHIO

DATE:	03/29/2013
DRAWN BY:	JDZ
CHK'D BY:	WAB
JOB NO.	2012.01446

REVISIONS	
1 TAC COMMENTS	05/10/2013

SHEET NO.
C11.7
OF

2012.01446.CE.16.C11.1-11.6.SLP.dwg

PRINT DATE: 5/10/13 EDIT DATE: 2/19/13 - 2:56 PM EDITED BY: HWINDHORST DRAWING FILE: P:\2012\01446\D. DRAWINGS\CIVIL\PLAN SET\2012.01446.CE.16.C11.1-11.6.SLP.DWG
PLOT SCALE: 1:2.5849

Incandescent **Roman Coach** **Outdoor**

Type _____

	-09EB	-19EB	-31EB	-33EB
P5766	☐	☐	☐	☐

Catalog No.	Finish: Brushed Nickel	Finish: Roman Bronze	Finish: Black	Finish: Cobble stone	Lamping	Dimensions (Inches) A	B	C	D
P5766	-09EB	-19EB	-31EB	-33EB	1-13w 4 pin CF Spiral or triple tube	6	9-7/8	7	3-1/2

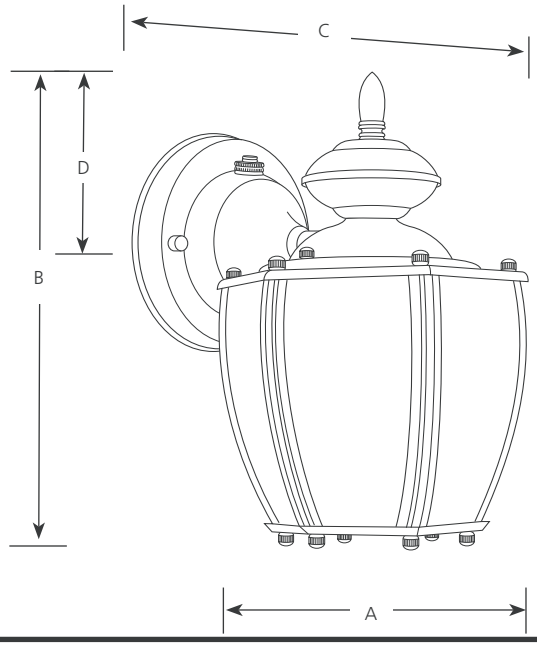

Specifications:

General

- Acorn style
- Solid brass construction
- Plated brushed nickel (-09), bronze (-19), painted black (-31), or cobblestone (-33) finishes
- Etched white glass panels
- Lamp replacement through bottom opening
- Matching wall units

Mounting

- Wall mounted outdoor.
- Covers standard recessed octagonal outlet box
- Mounting strap for outlet box and cap nuts included

Electrical

- GX24q-1 based socket
- 120v NPF electronic ballast
- Integral photocell turns unit off during daytime
- Unit will start down to 0 degrees F
- Pre-wired

Labeling

- UL-CUL wet location listed

Progress Lighting
701 Millennium Blvd.
Greenville, South Carolina
29607

www.progresslighting.com

Compact Fluorescent **Roman Coach** **Outdoor**

Type _____

	-09STR	-19STR	-31STR
P5985	☐	☐	☐
P5986	☐	☐	☐

Catalog No.	Finish: Brushed Nickel	Finish: Roman Bronze	Finish: Black	Lamping	Dimensions (Inches) A	B	C	D
P5985	-09STR	-19STR	-31STR	1 26w GU24 CF*	4-5/8	10	6-1/8	2-3/4
P5986	-09STR	-19STR	-31STR	1 13w GU24 CF*	4-5/8	8-1/2	6-1/8	2-3/4

*Spiral

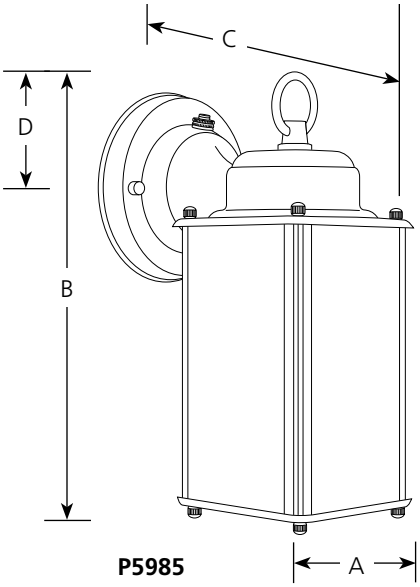

P5985

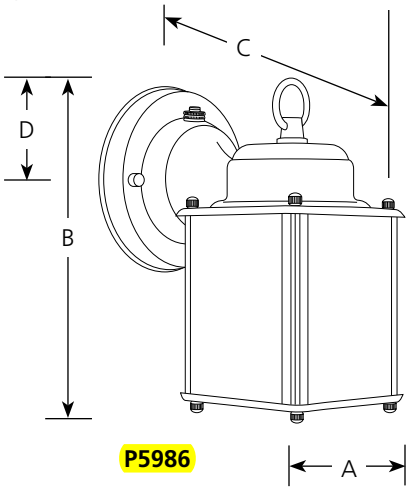

P5986

Specifications:

General

- Square style
- Solid brass construction
- Plated brushed nickel (-09) and roman bronze (-19); painted black (-31)
- Etched white glass panels
- Lamp replacement through bottom opening

Mounting

- Wall mounted outdoor.
- Covers standard recessed octagonal outlet box
- Mounting strap for outlet box and cap nuts included

Electrical

- GU24 base socket
- Integral photocell turns unit off during daytime
- Unit will start down to 0 degrees F
- Pre-wired

Labeling

- cCSAus "Wet Location" listed

Progress Lighting
701 Millennium Blvd.
Greenville, South Carolina
29607

www.progresslighting.com