LEFT ELEVATION - 4 UNIT

SCALE 1/8" = 1'-0"

REFER TO FRONT ELEVATION FOR CONDITIONS REGARDING ELEV.

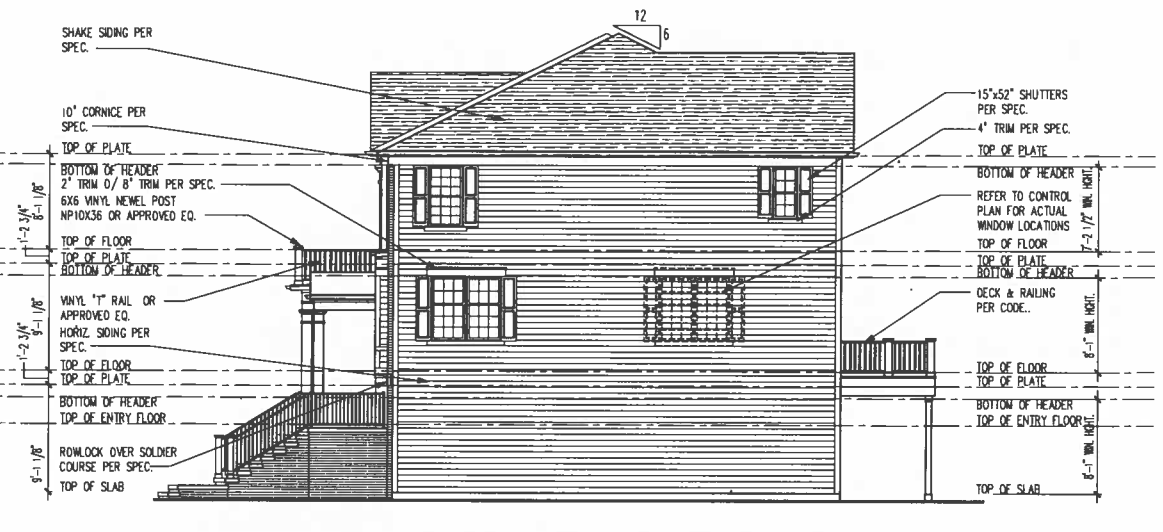

RIGHT ELEVATION - 4 UNIT

SCALE 1/8" = 1'-0"

REFER TO FRONT ELEVATION FOR CONDITIONS REGARDING ELEV.

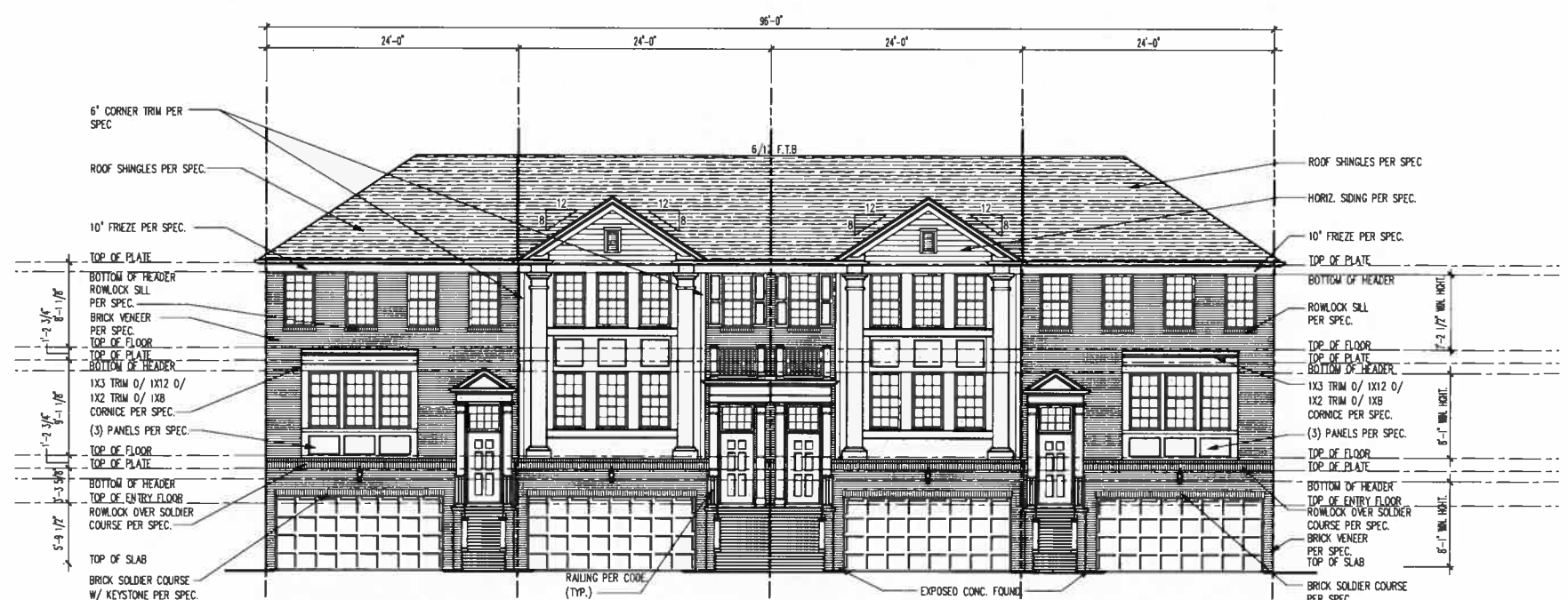

FRONT ELEVATION - 4 UNIT

SCALE 1/8" = 1'-0"

NOTE:

1. ADDRESS BLOCK SHALL BE ETCHED STONE OR BRASS PLATE – VERIFY FINAL LOCATION WITH VILLAGE.
2. ALL ROOF STYLE AND COLOR SHALL BE THE SAME FOR ALL BUILDINGS.

PLOTTED: November 28, 2013 / Luis Godoy / 0634-0635-N-VM-2-4-UNIT.DWG

(c) Copyright Pulte Home Corporation – 2013

Indiana Division
11590 North Meridian Street, Suite 530
Carmel, Indiana 46032

Pulte Homes

Front & Side Elevations - 4 Unit

PRODUCTION MANAGER
ANDY KUNZ
CURRENT RELEASE DATE: 11/18/2013

REV #	DATE / DESCRIPTION
△	– –
△	– –
△	– –
△	– –
△	– –
△	– –
△	– –
△	– –

PROJECT TYPE
Multi-FAMILY

COMMUNITY NAME
VIKING MEADOW 2
LAWSON COMMUNITY ID

GARAGE HANDING

SPECIFICATION LEVEL

PLAN NAME
CHADSWORTH & DERYRAUX
NPC PLAN NUMBER
0634/0635
LAWSON PLAN ID

LEGACY PLAN NUMBER / NAME

SHEET
4-7.00

NOTE: SCALES NOTED ON DRAWINGS RELATE TO FULL SIZE PLOTS ON 22x34 SHEETS – 11x17 SHEETS REPRESENT 1/2 SCALE PLOTS

ATTIC VENT SCHEDULE

CHADSWORTH - ELEV. 1

ROOF AREA "A"			SQ FTG	906	VENTILATION TYPE					
VENT LOCATION	SQ. FT. REQUIRED RANGE		SQ. FT. SUPPLIED	PERCENT OF TOTAL SUPPLIED	AT RIDGE			AT EAVE		
					POT 1	POT 2	RIDGE	EACH	CONT 1	CONT 2
					61.00	40.00	18.00	28.00	10.00	6.67
AT RIDGE	1.21	1.51	1.63	51.54	0	0	13.00	N/A	N/A	N/A
AT EAVE	1.81	1.51	1.53	48.46	N/A	N/A	N/A	0	22.00	0.00
TOTAL	3.02	3.02	3.15	100.00	CONTRACTOR TO VERIFY CORRECT VENTS USED IN FIELD					

VENT AREAS BASED ON AIR VENT MODELS: RVA 40 , R.P. SHINGLEVENT II, 4x34 SOFFIT VENT and SOVEREIGN SELECT SOFFIT

** CONTRACTORS INSTALLING VENTILATION SHALL BE RESPONSIBLE FOR VERIFYING CODE COMPLIANCE FOR ANY OPTIONS AFFECTING THESE CALCULATIONS

DEVERAUX - ELEV. 1

ROOF AREA "B"			SQ FTG	906	VENTILATION TYPE					
VENT LOCATION	SQ. FT. REQUIRED RANGE		SQ. FT. SUPPLIED	PERCENT OF TOTAL SUPPLIED	AT RIDGE			AT EAVE		
					POT 1	POT 2	RIDGE	EACH	CONT 1	CONT 2
					61.00	40.00	18.00	28.00	10.00	6.67
AT RIDGE	1.21	1.51	1.63	51.54	0	0	13.00	N/A	N/A	N/A
AT EAVE	1.81	1.51	1.53	48.46	N/A	N/A	N/A	0	22.00	0.00
TOTAL	3.02	3.02	3.15	100.00	CONTRACTOR TO VERIFY CORRECT VENTS USED IN FIELD					

VENT AREAS BASED ON AIR VENT MODELS: RVA 40 , R.P. SHINGLEVENT II, 4x34 SOFFIT VENT and SOVEREIGN SELECT SOFFIT

** CONTRACTORS INSTALLING VENTILATION SHALL BE RESPONSIBLE FOR VERIFYING CODE COMPLIANCE FOR ANY OPTIONS AFFECTING THESE CALCULATIONS

ATTIC VENTILATION NOTES

1. R806.2 MINIMUM VENT AREA.
THE MINIMUM NET FREE VENTILATING AREA SHALL BE 1/150 OF THE AREA OF THE VENTED SPACE.
EXCEPTION: THE MINIMUM NET FREE VENTILATION AREA SHALL BE 1/300 OF THE VENTED SPACE PROVIDED ONE OR MORE OF THE FOLLOWING CONDITIONS ARE MET:

1. IN CLIMATE ZONES 6, 7 AND 8, A CLASS I OR II VAPOR RETARDER IS INSTALLED ON THE WARM-IN-WINTER SIDE OF THE CEILING.

2. AT LEAST 40 PERCENT AND NOT MORE THAN 50 PERCENT OF THE REQUIRED VENTILATING AREA IS PROVIDED BY VENTILATORS LOCATED IN THE UPPER PORTION OF THE ATTIC OR RAFTER SPACE. UPPER VENTILATORS SHALL BE LOCATED NO MORE THAN 3 FEET (914 MM) BELOW THE RIDGE OR HIGHEST POINT OF THE SPACE, MEASURED VERTICALLY, WITH THE BALANCE OF THE REQUIRED VENTILATION PROVIDED BY EAVE OR CORNICE VENTS. WHERE THE LOCATION OF WALL OR ROOF FRAMING MEMBERS CONFLICTS WITH THE INSTALLATION OF UPPER VENTILATORS, INSTALLATION MORE THAN 3 FEET (914 MM) BELOW THE RIDGE OR HIGHEST POINT OF THE SPACE SHALL BE PERMITTED.

2. AN ICE BARRIER THAT CONSISTS OF AT LEAST TWO LAYERS OF UNDERLAYMENT CEMENTED TOGETHER OR OF A SELF-ADHERING POLYMER MODIFIED BITUMEN SHEET, SHALL BE USED IN LIEU OF NORMAL UNDERLAYMENT AND EXTENDED FROM THE EAVE'S EDGE TO A POINT AT LEAST 24 INCHES BEYOND THE INTERIOR SIDE OF THE EXTERIOR WALL LINE OF THE BUILDING PER I.R.C. SECTION R905.2.7.1. - SEE ALSO TYPICAL WALL SECTIONS.

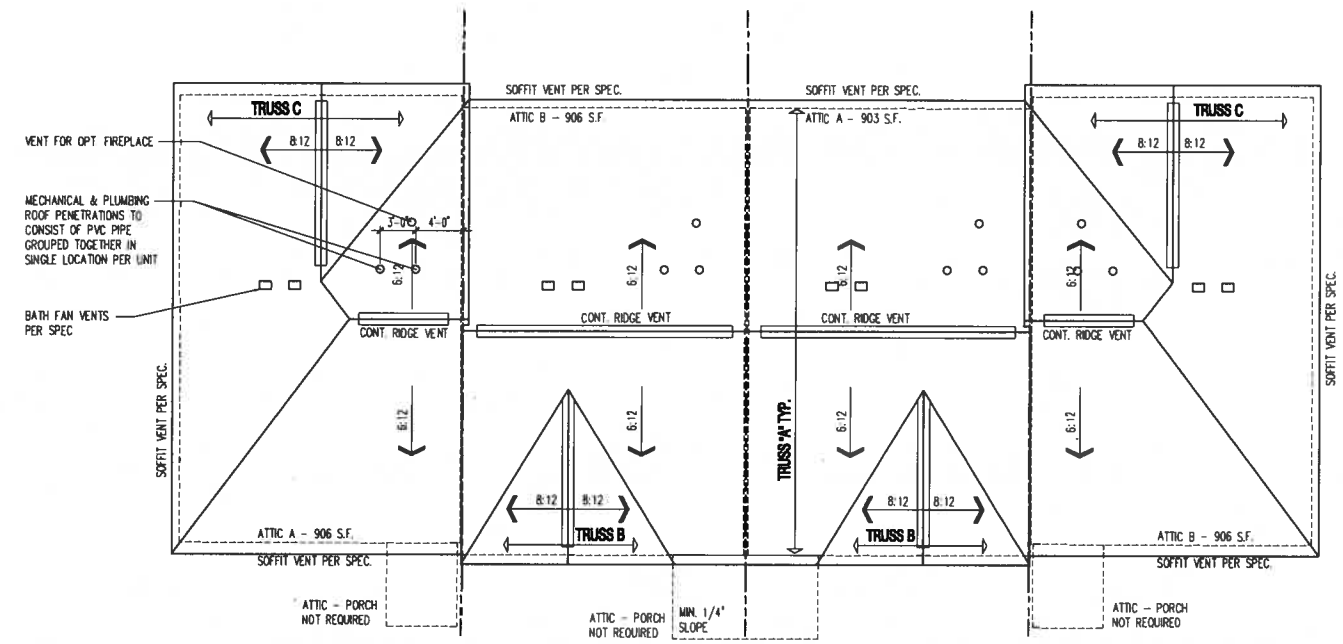

ROOF PLAN - 4 UNIT

SCALE 1/8" = 1'-0"

**CONT. RIDGE VENT PER SPEC. SEALED 48" EACH SIDE OF FIRE SEPERATION WALL (TYP.)

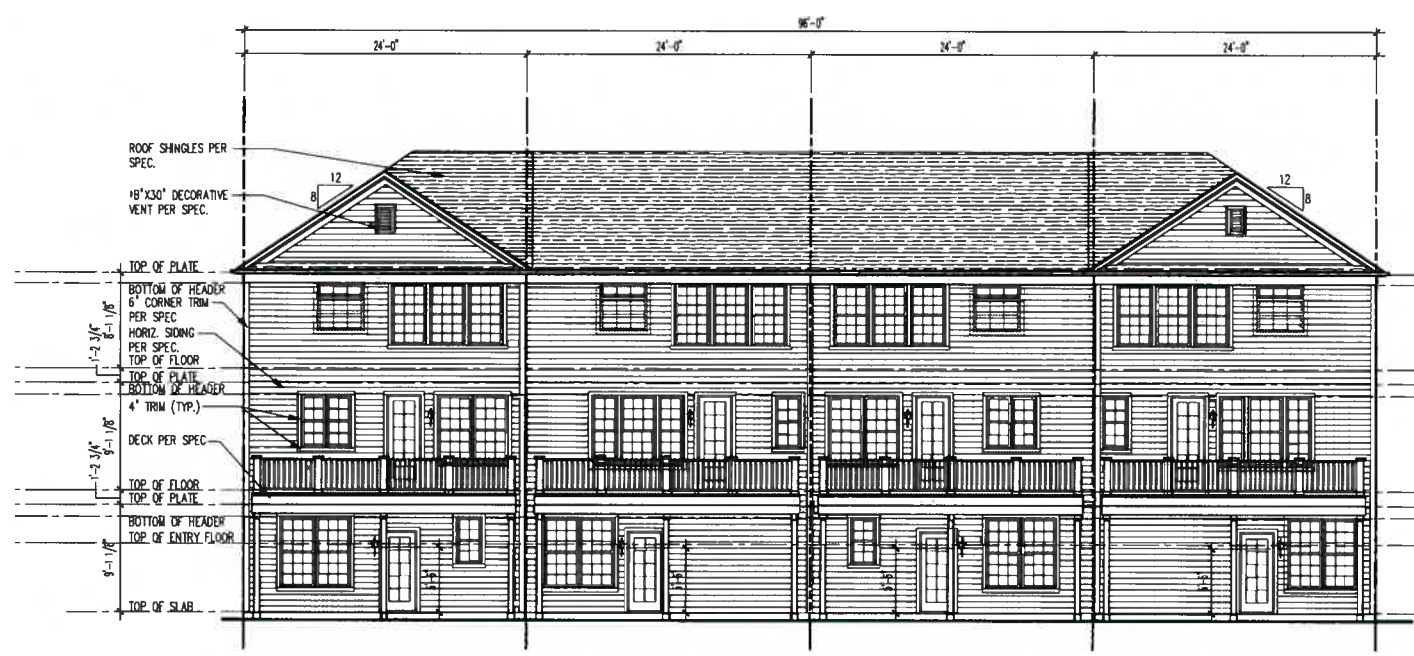

REAR ELEVATION - 4 UNIT

SCALE 1/8" = 1'-0"

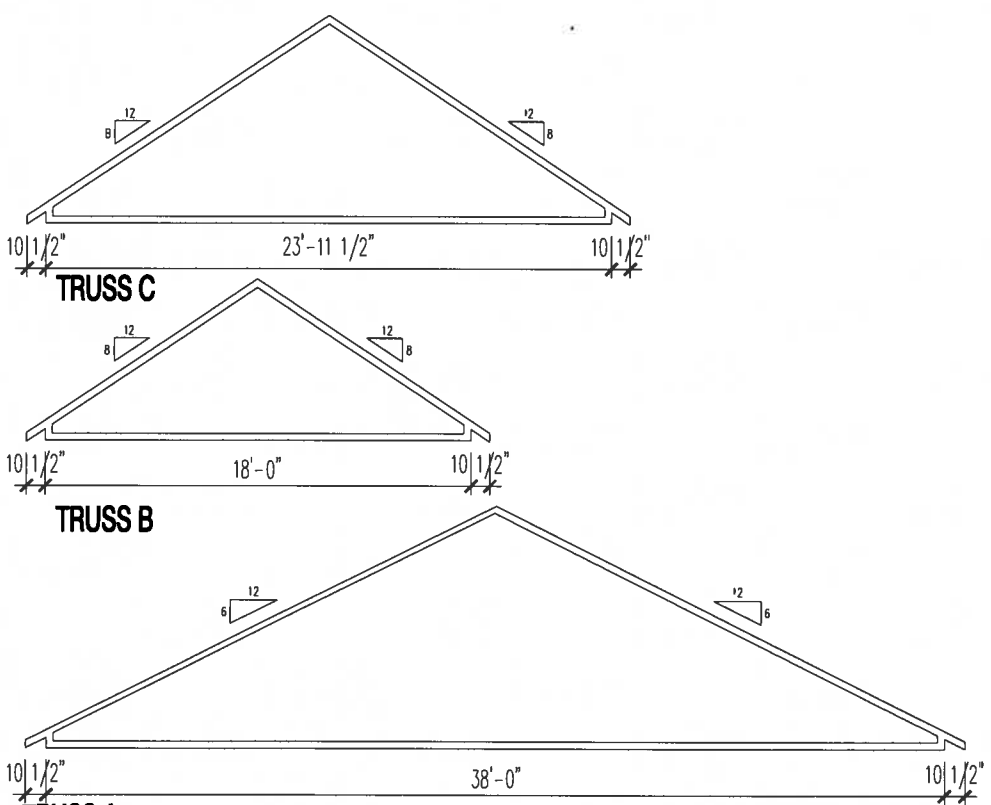

NOTE !!
THESE PROFILE DRAWINGS ARE TO INDICATE DESIGN INTENT ONLY. TRUSS MANUFACTURER IS RESPONSIBLE FOR VERIFYING SPANS - OVERHANGS - LOADS PITCHES - HEELS HGTS ETC.

SCHEMATIC ROOF TRUSS PROFILES

SCALE 1/4" = 1'-0"

NOTE:
1. ADDRESS BLOCK SHALL BE ETCHED STONE OR BRASS PLATE - VERIFY FINAL LOCATION WITH VILLAGE.
2. ALL ROOF STYLE AND COLOR SHALL BE THE SAME FOR ALL BUILDINGS.

PLOTTED: November 28, 2013 / Luis Codoco / 0634-0635-N-1M-2-4-UNIT.DWG

(c) Copyright Pulte Home Corporation - 2013

Indiana Division
11590 North Meridian Street, Suite 530
Carmel, Indiana 46032

Pulte Homes

Rear Elevation & Roof Plan - 4 Unit

PRODUCTION MANAGER
ANDY KUNZ
CURRENT RELEASE DATE: 11/18/2013

REV #	DATE / DESCRIPTION
△	- -
△	- -
△	- -
△	- -
△	- -
△	- -
△	- -
△	- -
△	- -

NOTE: SCALES NOTED ON DRAWINGS RELATE TO FULL SIZE PLOTS ON 22x34 SHEETS - 11x17 SHEETS REPRESENT 1/2 SCALE PLOTS

PROJECT TYPE
Multi-FAMILY

COMMUNITY NAME
VIKING MEADOW 2
LAWSON COMMUNITY ID

GARAGE HANDING

SPECIFICATION LEVEL

PLAN NAME
CHADSWORTH & DEVERAUX
NPC PLAN NUMBER
0634/0635
LAWSON PLAN ID

LEGACY PLAN NUMBER / NAME

SHEET
4-7.01

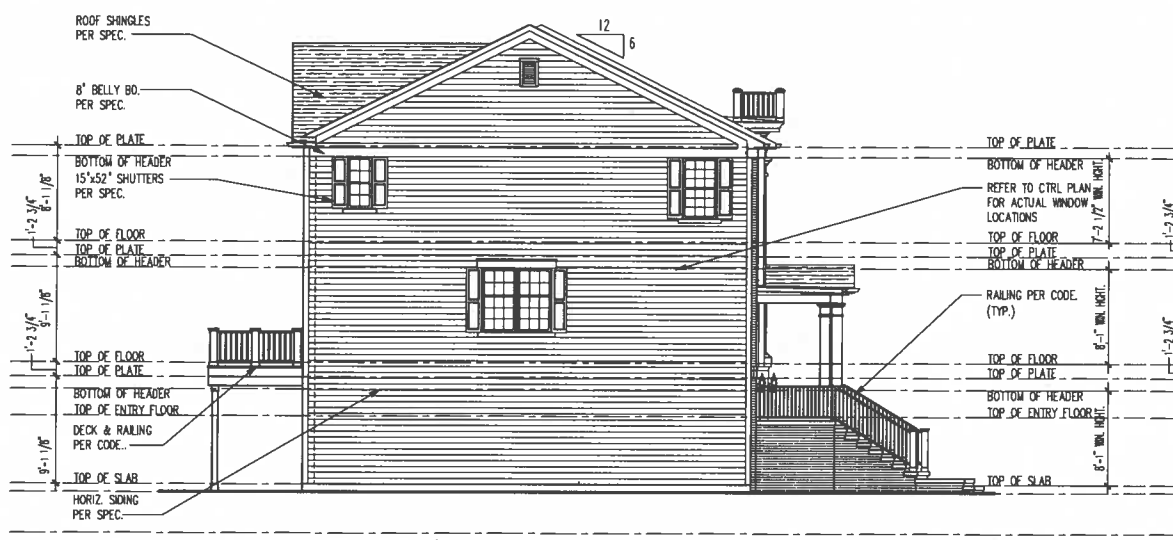

LEFT ELEVATION - 5 UNIT

SCALE 1/8" = 1'-0"

REFER TO FRONT ELEVATION FOR CONDITIONS REGARDING ELEV.

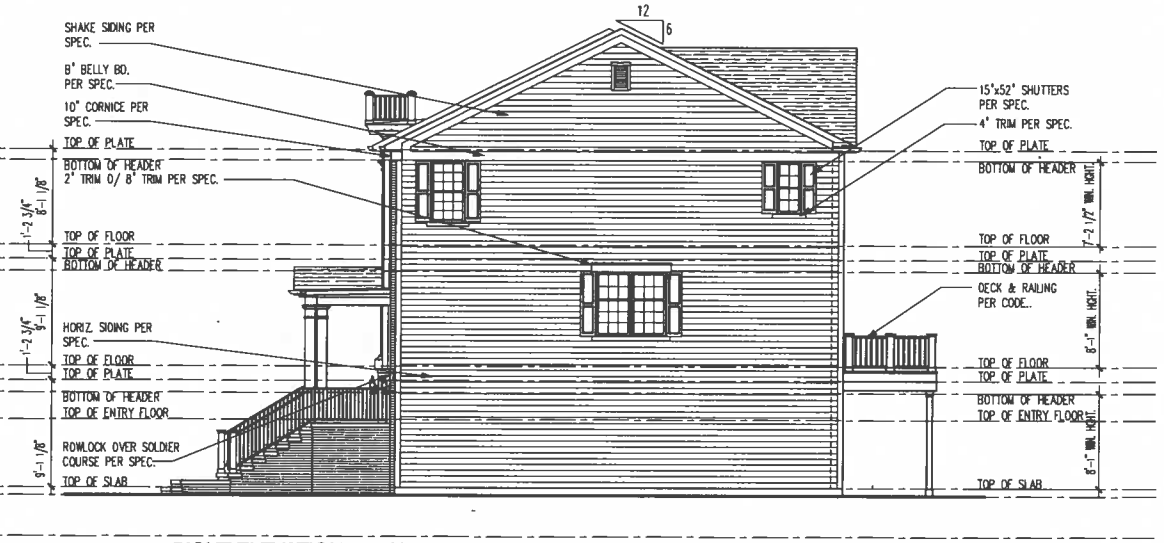

RIGHT ELEVATION - 5 UNIT

SCALE 1/8" = 1'-0"

REFER TO FRONT ELEVATION FOR CONDITIONS REGARDING ELEV.

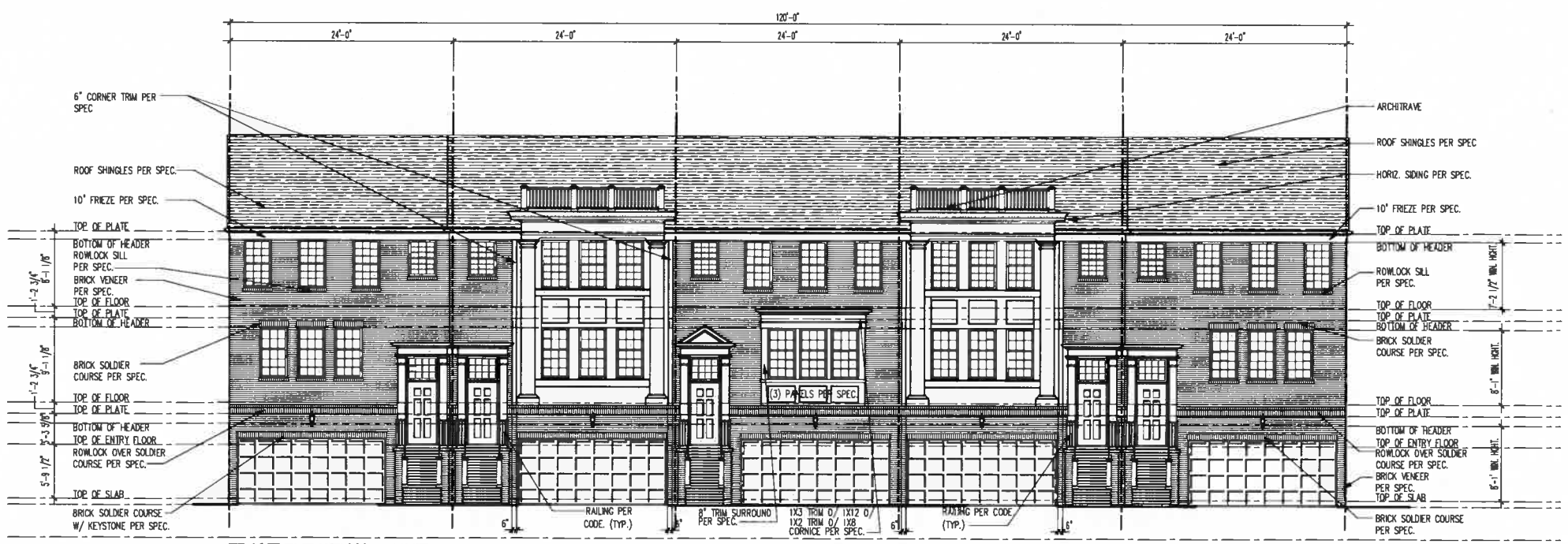

FRONT ELEVATION - 5 UNIT

SCALE 1/8" = 1'-0"

NOTE

1. ADDRESS BLOCK SHALL BE ETCHED STONE OR BRASS PLATE – VERIFY FINAL LOCATION WITH VILLAGE.
2. ALL ROOF STYLE AND COLOR SHALL BE THE SAME FOR ALL BUILDINGS.

PLOTTED: November 28, 2013 / Luis Coducos / 0634-0635-IN-VM-2-5-UNIT.DWG

(c) Copyright Pulte Home Corporation – 2013

Indiana Division
11590 North Meridian Street, Suite 530
Carmel, Indiana 46032

Pulte Homes

Front & Side Elevations - 5 Unit

PRODUCTION MANAGER
ANDY KUNZ
CURRENT RELEASE DATE: 11/18/2013

REV #	DATE / DESCRIPTION
△	
△	
△	
△	
△	
△	
△	
△	

PROJECT TYPE
Multi-FAMILY

COMMUNITY NAME
VIKING MEADOW 2

LAWSON COMMUNITY ID

GARAGE HANDING

SPECIFICATION LEVEL

PLAN NAME
CHATSWORTH & DERYMAUX

MPC PLAN NUMBER
0634/0635

LAWSON PLAN ID

LEGACY PLAN NUMBER / NAME

SHEET
5-7.00

NOTE: SCALES NOTED ON DRAWINGS RELATE TO FULL SIZE PLOTS ON 22x34 SHEETS – 11x17 SHEETS REPRESENT 1/2 SCALE PLOTS

ATTIC VENT SCHEDULE

CHADSWORTH - ELEV. 1

ROOF AREA "A - 1"			SQ FTG	906	VENTILATION TYPE					
VENT LOCATION	SQ. FT. REQUIRED RANGE		SQ. FT. SUPPLIED	PERCENT OF TOTAL SUPPLIED	AT RIDGE			AT EAVE		
					POT 1	POT 2	RIDGE	EACH	CONT 1	CONT 2
					61.00	40.00	18.00	28.00	10.00	6.67
AT RIDGE	1.21	1.51	1.63	51.54	0	0	13.00	N/A	N/A	N/A
AT EAVE	1.81	1.51	1.53	48.46	N/A	N/A	N/A	0	22.00	0.00
TOTAL	3.02	3.02	3.15	100.00	CONTRACTOR TO VERIFY CORRECT VENTS USED IN FIELD					

VENT AREAS BASED ON AIR VENT MODELS: RVA 49 , S.P. SHINGLEVENT II, 4x14 SOFFIT VENT and SOVEREIGN SELECT SOFFIT

** CONTRACTORS INSTALLING VENTILATION SHALL BE RESPONSIBLE FOR VERIFYING CODE COMPLIANCE FOR ANY OPTIONS AFFECTING THESE CALCULATIONS

CHADSWORTH - ELEV. 1

ROOF AREA "A - 2"			SQ FTG	901	VENTILATION TYPE					
VENT LOCATION	SQ. FT. REQUIRED RANGE		SQ. FT. SUPPLIED	PERCENT OF TOTAL SUPPLIED	AT RIDGE			AT EAVE		
					POT 1	POT 2	RIDGE	EACH	CONT 1	CONT 2
					61.00	40.00	18.00	28.00	10.00	6.67
AT RIDGE	1.20	1.50	1.63	51.54	0	0	13.00	N/A	N/A	N/A
AT EAVE	1.80	1.50	1.53	48.46	N/A	N/A	N/A	0	22.00	0.00
TOTAL	3.00	3.00	3.15	100.00	CONTRACTOR TO VERIFY CORRECT VENTS USED IN FIELD					

VENT AREAS BASED ON AIR VENT MODELS: RVA 49 , S.P. SHINGLEVENT II, 4x14 SOFFIT VENT and SOVEREIGN SELECT SOFFIT

** CONTRACTORS INSTALLING VENTILATION SHALL BE RESPONSIBLE FOR VERIFYING CODE COMPLIANCE FOR ANY OPTIONS AFFECTING THESE CALCULATIONS

DEVERAUX - ELEV. 1

ROOF AREA "B"			SQ FTG	899	VENTILATION TYPE					
VENT LOCATION	SQ. FT. REQUIRED RANGE		SQ. FT. SUPPLIED	PERCENT OF TOTAL SUPPLIED	AT RIDGE			AT EAVE		
					POT 1	POT 2	RIDGE	EACH	CONT 1	CONT 2
					61.00	40.00	18.00	28.00	10.00	6.67
AT RIDGE	1.20	1.50	1.63	51.54	0	0	13.00	N/A	N/A	N/A
AT EAVE	1.80	1.50	1.53	48.46	N/A	N/A	N/A	0	22.00	0.00
TOTAL	3.00	3.00	3.15	100.00	CONTRACTOR TO VERIFY CORRECT VENTS USED IN FIELD					

VENT AREAS BASED ON AIR VENT MODELS: RVA 49 , S.P. SHINGLEVENT II, 4x14 SOFFIT VENT and SOVEREIGN SELECT SOFFIT

** CONTRACTORS INSTALLING VENTILATION SHALL BE RESPONSIBLE FOR VERIFYING CODE COMPLIANCE FOR ANY OPTIONS AFFECTING THESE CALCULATIONS

ATTIC VENTILATION NOTES

1. R806.2 MINIMUM VENT AREA.
THE MINIMUM NET FREE VENTILATING AREA SHALL BE 1/150 OF THE AREA OF THE VENTED SPACE.
EXCEPTION: THE MINIMUM NET FREE VENTILATION AREA SHALL BE 1/300 OF THE VENTED SPACE PROVIDED ONE OR MORE OF THE FOLLOWING CONDITIONS ARE MET:

1. IN CLIMATE ZONES 6, 7 AND 8, A CLASS I OR II VAPOR RETARDER IS INSTALLED ON THE WARM-IN-WINTER SIDE OF THE CEILING.

2. AT LEAST 40 PERCENT AND NOT MORE THAN 50 PERCENT OF THE REQUIRED VENTILATING AREA IS PROVIDED BY VENTILATORS LOCATED IN THE UPPER PORTION OF THE ATTIC OR RAFTER SPACE. UPPER VENTILATORS SHALL BE LOCATED NO MORE THAN 3 FEET (914 MM) BELOW THE RIDGE OR HIGHEST POINT OF THE SPACE, MEASURED VERTICALLY, WITH THE BALANCE OF THE REQUIRED VENTILATION PROVIDED BY EAVE OR CORNICE VENTS. WHERE THE LOCATION OF WALL OR ROOF FRAMING MEMBERS CONFLICTS WITH THE INSTALLATION OF UPPER VENTILATORS, INSTALLATION MORE THAN 3 FEET (914 MM) BELOW THE RIDGE OR HIGHEST POINT OF THE SPACE SHALL BE PERMITTED.

2. AN ICE BARRIER THAT CONSISTS OF AT LEAST TWO LAYERS OF UNDERLAYMENT CEMENTED TOGETHER OR OF A SELF-ADHERING POLYMER MODIFIED BITUMEN SHEET, SHALL BE USED IN LIEU OF NORMAL UNDERLAYMENT AND EXTENDED FROM THE EAVE'S EDGE TO A POINT AT LEAST 24 INCHES BEYOND THE INTERIOR SIDE OF THE EXTERIOR WALL LINE OF THE BUILDING PER I.R.C. SECTION R905.2.7.1. - SEE ALSO TYPICAL WALL SECTIONS.

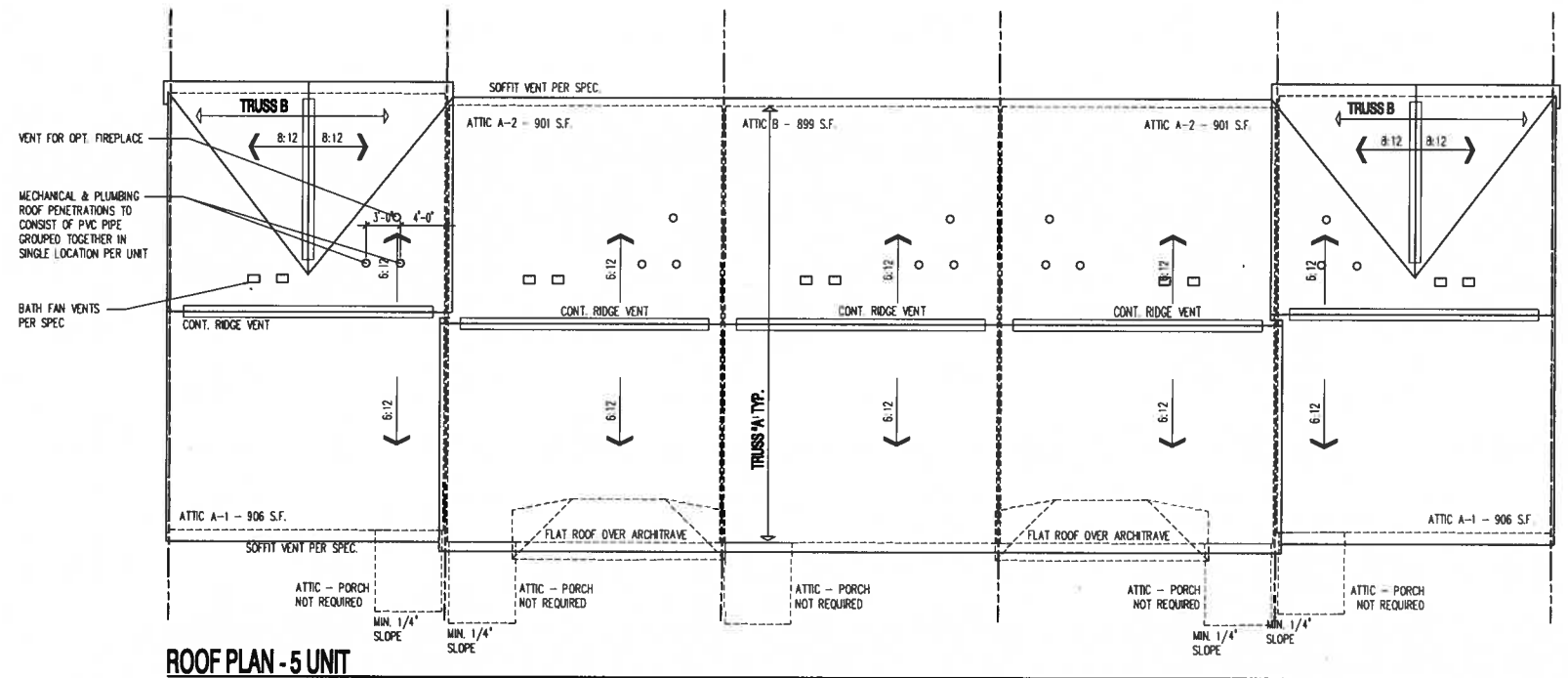

ROOF PLAN - 5 UNIT

SCALE 1/8" = 1'-0"

**CONT. RIDGE VENT PER SPEC. SEALED 48" EACH SIDE OF FIRE SEPERATION WALL (TYP.)

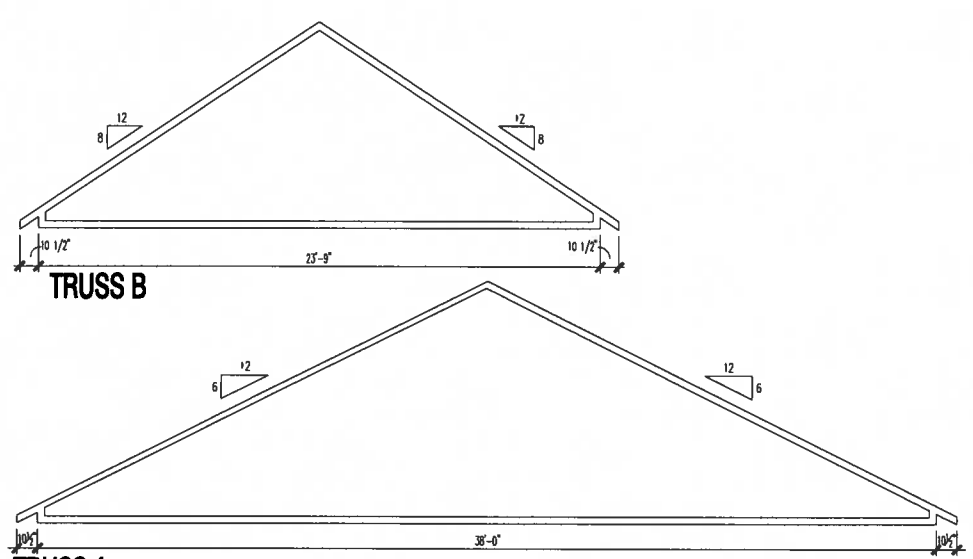

SCHEMATIC ROOF TRUSS PROFILES

SCALE 1/4" = 1'-0"

NOTE !!
THESE PROFILE DRAWINGS ARE TO INDICATE DESIGN INTENT ONLY. TRUSS MANUFACTURER IS RESPONSIBLE FOR VERIFYING SPANS - OVERHANGS - LOADS PITCHES - HEELS HGTS ETC.

REAR ELEVATION - 5 UNIT

SCALE 1/8" = 1'-0"

NOTE:

1. ADDRESS BLOCK SHALL BE ETCHED STONE OR BRASS PLATE - VERIFY FINAL LOCATION WITH VILLAGE.
2. ALL ROOF STYLE AND COLOR SHALL BE THE SAME FOR ALL BUILDINGS.

NOTE: SCALES NOTED ON DRAWINGS RELATE TO FULL SIZE PLOTS ON 22x34 SHEETS - 1x17 SHEETS REPRESENT 1/2 SCALE PLOTS

(c) Copyright Pulte Home Corporation - 2013

Indiana Division
11590 North Meridian Street, Suite 530
Carmel, Indiana 46032

Pulte Homes

Rear Elevation & Roof Plan - 5 Unit

PRODUCTION MANAGER
ANDY KUNZ
CURRENT RELEASE DATE: 11/18/2013

REV #	DATE / DESCRIPTION
△	--
△	--
△	--
△	--
△	--
△	--
△	--
△	--

PROJECT TYPE
Multi-FAMILY

COMMUNITY NAME
VIKING MEADOW 2

LANSON COMMUNITY ID

GARAGE HANDING

SPECIFICATION LEVEL

PLAN NAME
CHADSWORTH & DEVERAUX

NPC PLAN NUMBER
0634/0635

LANSON PLAN ID

LEGACY PLAN NUMBER / NAME

SHEET
5-7.01

PLOTTED: November 28, 2013 / Luis Coduco / 0634-0635-IN-IM-2-5-UNIT.DWG

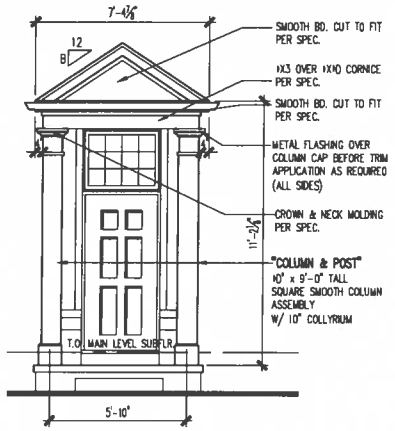

ENTRY DETAILS

SCALE 1/4" = 1'-0"

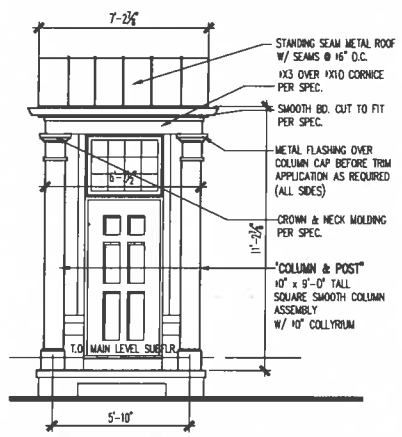

ENTRY DETAILS

SCALE 1/4" = 1'-0"

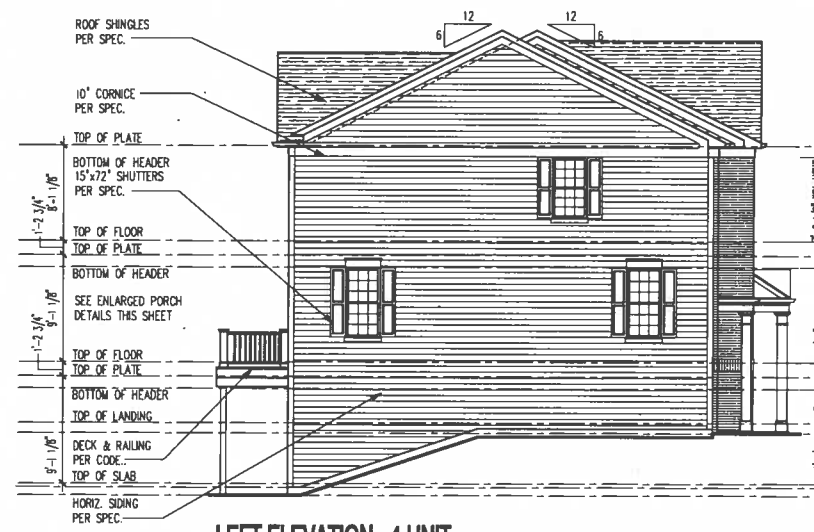

LEFT ELEVATION - 4 UNIT

SCALE 1/8" = 1'-0"

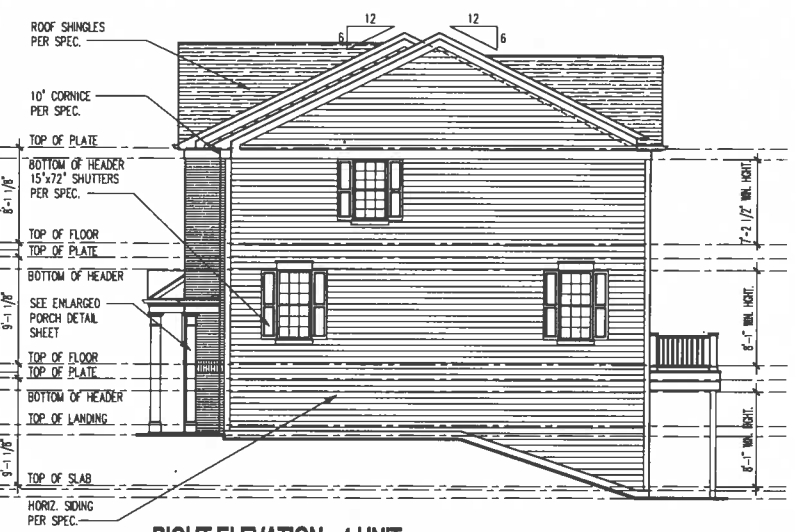

RIGHT ELEVATION - 4 UNIT

SCALE 1/8" = 1'-0"

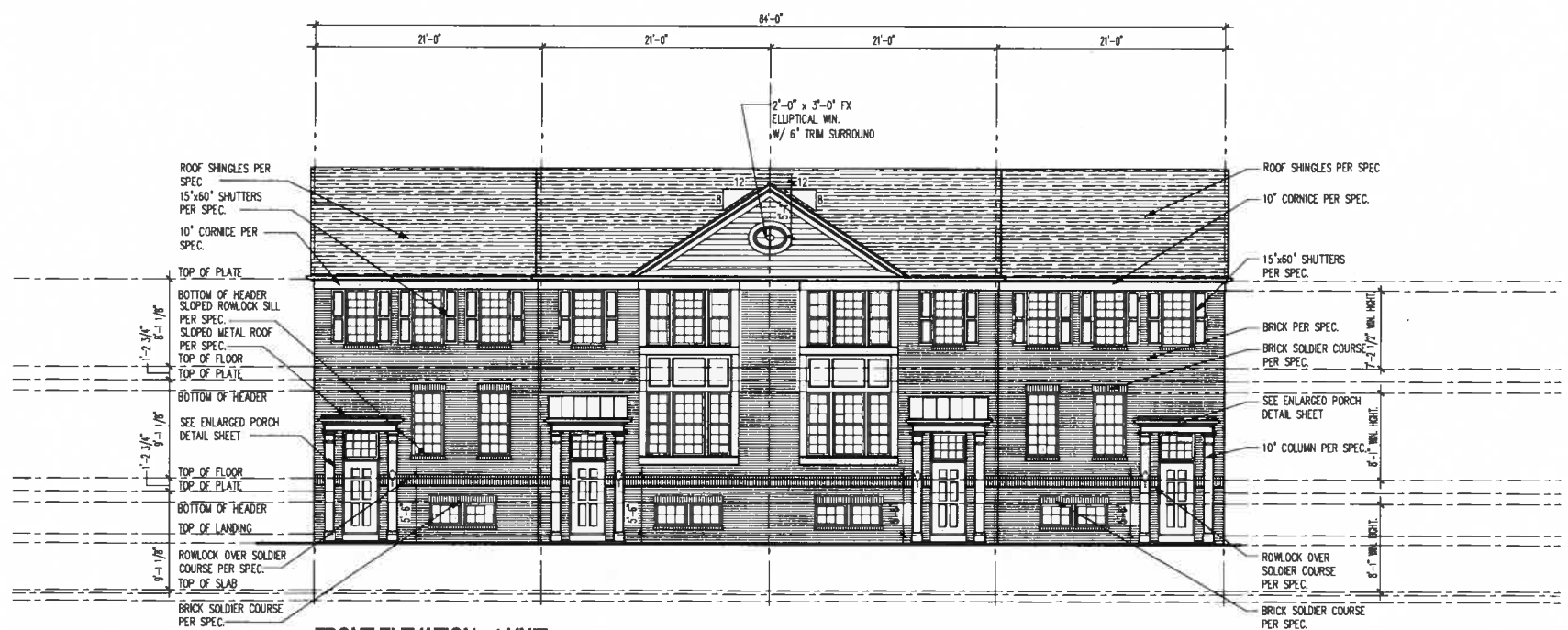

FRONT ELEVATION - 4 UNIT

SCALE 1/8" = 1'-0"

NOTE:

1. ADDRESS BLOCK SHALL BE ETCHED STONE OR BRASS PLATE - VERIFY FINAL LOCATION WITH VILLAGE.
2. ALL ROOF STYLE AND COLOR SHALL BE THE SAME FOR ALL BUILDINGS.

PLOTTED: November 14, 2013 / Luis Cadaco / 0837-IN-NM-1-4-UNIT.DWG

(c) Copyright Pulte Home Corporation - 2013

Indiana Division
11590 North Meridian Street, Suite 530
Carmel, Indiana 46032

Pulte Homes

Front & Side Elevations - 4 Unit

PRODUCTION MANAGER
ANDY KUNZ
CURRENT RELEASE DATE: 11/08/2013

REV #	DATE / DESCRIPTION
1	-
2	-
3	-
4	-
5	-
6	-
7	-
8	-
9	-

PROJECT TYPE
Multi-FAMILY

COMMUNITY NAME
VIKING MEADOW 1

LAWSON COMMUNITY ID

GARAGE HANDING

SPECIFICATION LEVEL

PLAN NAME
PROVIDENCE

NPC PLAN NUMBER
0837

LAWSON PLAN ID

LEGACY PLAN NUMBER / NAME

SHEET
4-7.00

NOTE: SCALES NOTED ON DRAWINGS RELATE TO FULL SIZE PLOTS ON 22x34 SHEETS - 11x17 SHEETS REPRESENT 1/2 SCALE PLOTS

ATTIC VENT SCHEDULE

PROVIDENCE - ELEV. 1 AND 2

ROOF AREA "A"			SQ FTG	756	VENTILATION TYPE					
VENT LOCATION	SQ. FT. REQUIRED RANGE		SQ. FT. SUPPLIED	PERCENT OF TOTAL SUPPLIED	AT RIDGE			AT EAVE		
					POT 1	POT 2	RIDGE	EACH	CONT 1	CONT 2
					61.00	40.00	18.00	28.00	10.00	6.67
AT RIDGE	1.01	1.26	1.50	51.92	0	0	12.00	N/A	N/A	N/A
AT EAVE	1.51	1.26	1.39	48.08	N/A	N/A	N/A	0	20.00	0.00
TOTAL	2.52	2.52	2.89	100.00	CONTRACTOR TO VERIFY CORRECT VENTS USED IN FIELD					

VENT AREAS BASED ON AIR VENT MODELS: RVA 40, S.P. SHINGLEVENT II, 4x16 SOFFIT VENT and SOVEREIGN SELECT SOFFIT

** CONTRACTORS INSTALLING VENTILATION SHALL BE RESPONSIBLE FOR VERIFYING CODE COMPLIANCE FOR ANY OPTIONS AFFECTING THESE CALCULATIONS

ROOF AREA "B"			SQ FTG	756	VENTILATION TYPE					
VENT LOCATION	SQ. FT. REQUIRED RANGE		SQ. FT. SUPPLIED	PERCENT OF TOTAL SUPPLIED	AT RIDGE			AT EAVE		
					POT 1	POT 2	RIDGE	EACH	CONT 1	CONT 2
					61.00	40.00	18.00	28.00	10.00	6.67
AT RIDGE	1.01	1.26	1.31	51.22	0	0	10.50	N/A	N/A	N/A
AT EAVE	1.51	1.26	1.25	48.78	N/A	N/A	N/A	0	18.00	0.00
TOTAL	2.52	2.52	2.56	100.00	CONTRACTOR TO VERIFY CORRECT VENTS USED IN FIELD					

VENT AREAS BASED ON AIR VENT MODELS: RVA 40, S.P. SHINGLEVENT II, 4x16 SOFFIT VENT and SOVEREIGN SELECT SOFFIT

** CONTRACTORS INSTALLING VENTILATION SHALL BE RESPONSIBLE FOR VERIFYING CODE COMPLIANCE FOR ANY OPTIONS AFFECTING THESE CALCULATIONS

ATTIC VENTILATION NOTES

1. R806.2 MINIMUM VENT AREA.
THE MINIMUM NET FREE VENTILATING AREA SHALL BE 1/150 OF THE AREA OF THE VENTED SPACE.
EXCEPTION: THE MINIMUM NET FREE VENTILATION AREA SHALL BE 1/300 OF THE VENTED SPACE PROVIDED ONE OR MORE OF THE FOLLOWING CONDITIONS ARE MET:

1. IN CLIMATE ZONES 6, 7 AND 8, A CLASS I OR II VAPOR RETARDER IS INSTALLED ON THE WARM-IN-WINTER SIDE OF THE CEILING.

2. AT LEAST 40 PERCENT AND NOT MORE THAN 50 PERCENT OF THE REQUIRED VENTILATING AREA IS PROVIDED BY VENTILATORS LOCATED IN THE UPPER PORTION OF THE ATTIC OR RAFTER SPACE. UPPER VENTILATORS SHALL BE LOCATED NO MORE THAN 3 FEET (914 MM) BELOW THE RIDGE OR HIGHEST POINT OF THE SPACE, MEASURED VERTICALLY, WITH THE BALANCE OF THE REQUIRED VENTILATION PROVIDED BY EAVE OR DORMICE VENTS. WHERE THE LOCATION OF WALL OR ROOF FRAMING MEMBERS CONFLICTS WITH THE INSTALLATION OF UPPER VENTILATORS, INSTALLATION MORE THAN 3 FEET (914 MM) BELOW THE RIDGE OR HIGHEST POINT OF THE SPACE SHALL BE PERMITTED.

2. AN ICE BARRIER THAT CONSISTS OF AT LEAST TWO LAYERS OF UNDERLAYMENT CEMENTED TOGETHER OR OF A SELF-ADHERING POLYMER MODIFIED BITUMEN SHEET, SHALL BE USED IN LIEU OF NORMAL UNDERLAYMENT AND EXTENDED FROM THE EAVE'S EDGE TO A POINT AT LEAST 24 INCHES BEYOND THE INTERIOR SIDE OF THE EXTERIOR WALL LINE OF THE BUILDING PER I.R.C. SECTION R905.2.7.1. - SEE ALSO TYPICAL WALL SECTIONS.

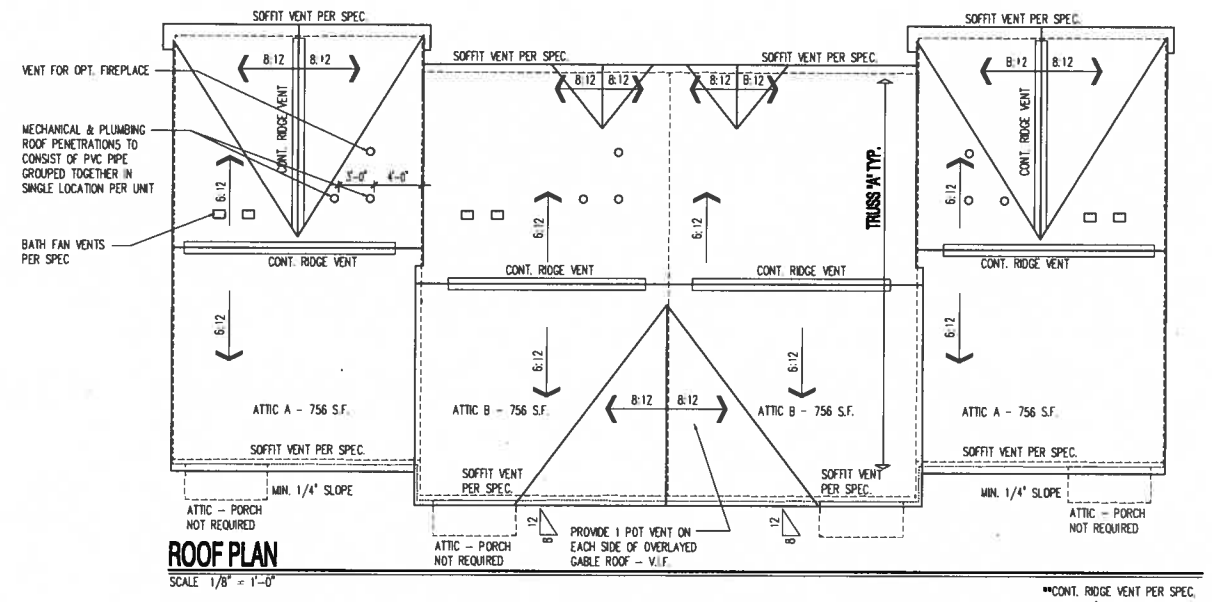

ROOF PLAN

SCALE 1/8" = 1'-0"

**CONT. RIDGE VENT PER SPEC. SEALED 48" EACH SIDE OF FIRE SEPERATION WALL (TYP.)

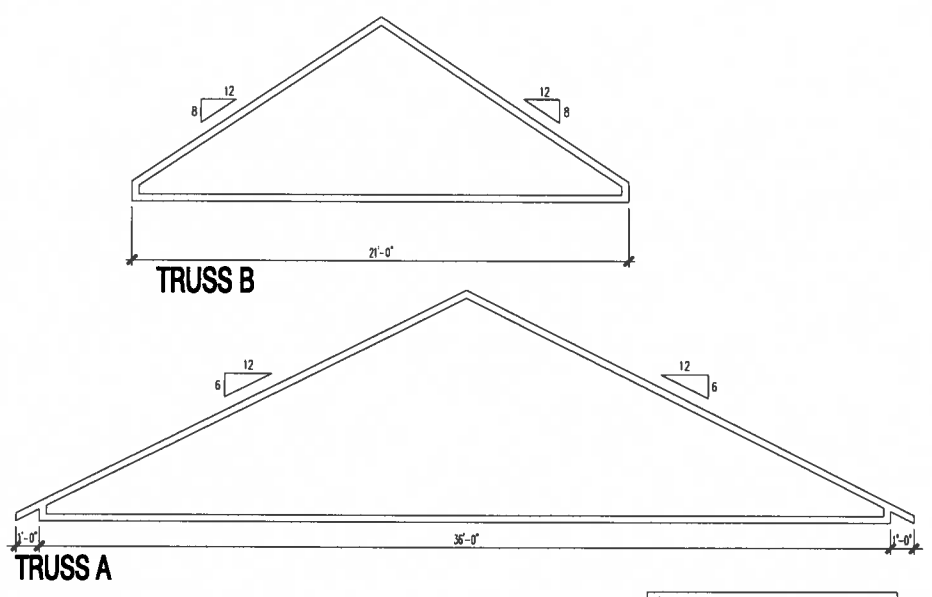

NOTE !!
THESE PROFILE DRAWINGS ARE TO INDICATE DESIGN INTENT ONLY. TRUSS MANUFACTURER IS RESPONSIBLE FOR VERIFYING SPANS - OVERHANGS - LOADS PITCHES - HEELS HGTS ETC.

SCHEMATIC ROOF TRUSS PROFILES

SCALE 1/4" = 1'-0"

REAR ELEVATION - 4 UNIT

SCALE 1/8" = 1'-0"

NOTE:

1. ADDRESS BLOCK SHALL BE ETCHED STONE OR BRASS PLATE - VERIFY FINAL LOCATION WITH VILLAGE.
2. ALL ROOF STYLE AND COLOR SHALL BE THE SAME FOR ALL BUILDINGS.

(c) Copyright Pulte Home Corporation - 2013

Indiana Division
11590 North Meridian Street, Suite 530
Carmel, Indiana 46032

Pulte Homes

Rear Elevation & Roof Plan - 4 Unit

PRODUCTION MANAGER
ANDY KUNZ
CURRENT RELEASE DATE: 11/08/2013

REV #	DATE / DESCRIPTION
△	-- --
△	-- --
△	-- --
△	-- --
△	-- --
△	-- --
△	-- --
△	-- --

PROJECT TYPE
Multi-FAMILY

COMMUNITY NAME
VIKING MEADOW 1
LAWSON COMMUNITY ID

GARAGE HANDING

SPECIFICATION LEVEL

PLAN NAME
PROVIDENCE
NPC PLAN NUMBER
0837
LAWSON PLAN ID

LEGACY PLAN NUMBER / NAME

SHEET
4-7.01

NOTE: SCALES NOTED ON DRAWINGS RELATE TO FULL SIZE PLOTS ON 22x34 SHEETS - 11x17 SHEETS REPRESENT 1/2 SCALE PLOTS

PLOTTED: November 14, 2013 / Luis Godoco / 0837-IN-VM-1-4-UNIT.DWG

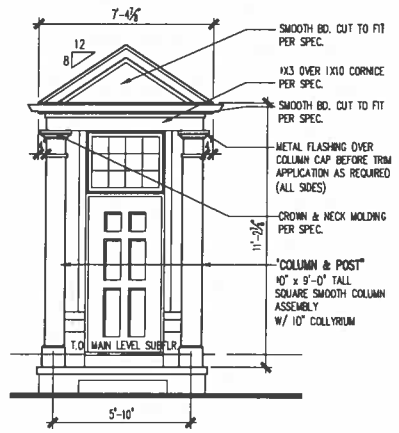

ENTRY DETAILS

SCALE 1/4" = 1'-0"

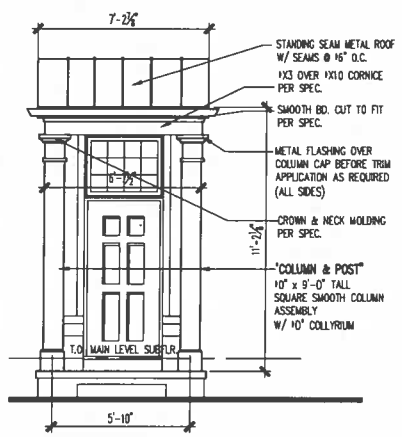

ENTRY DETAILS

SCALE 1/4" = 1'-0"

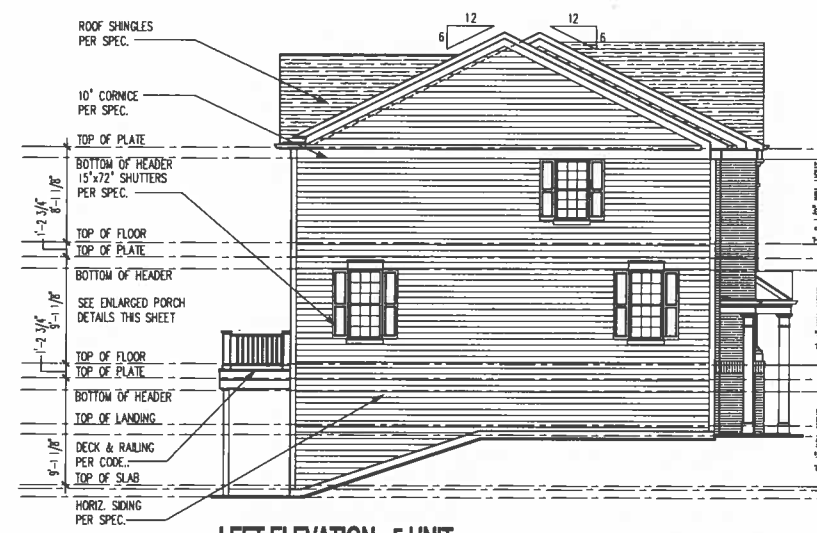

LEFT ELEVATION - 5 UNIT

SCALE 1/8" = 1'-0"

RIGHT ELEVATION - 5 UNIT

SCALE 1/8" = 1'-0"

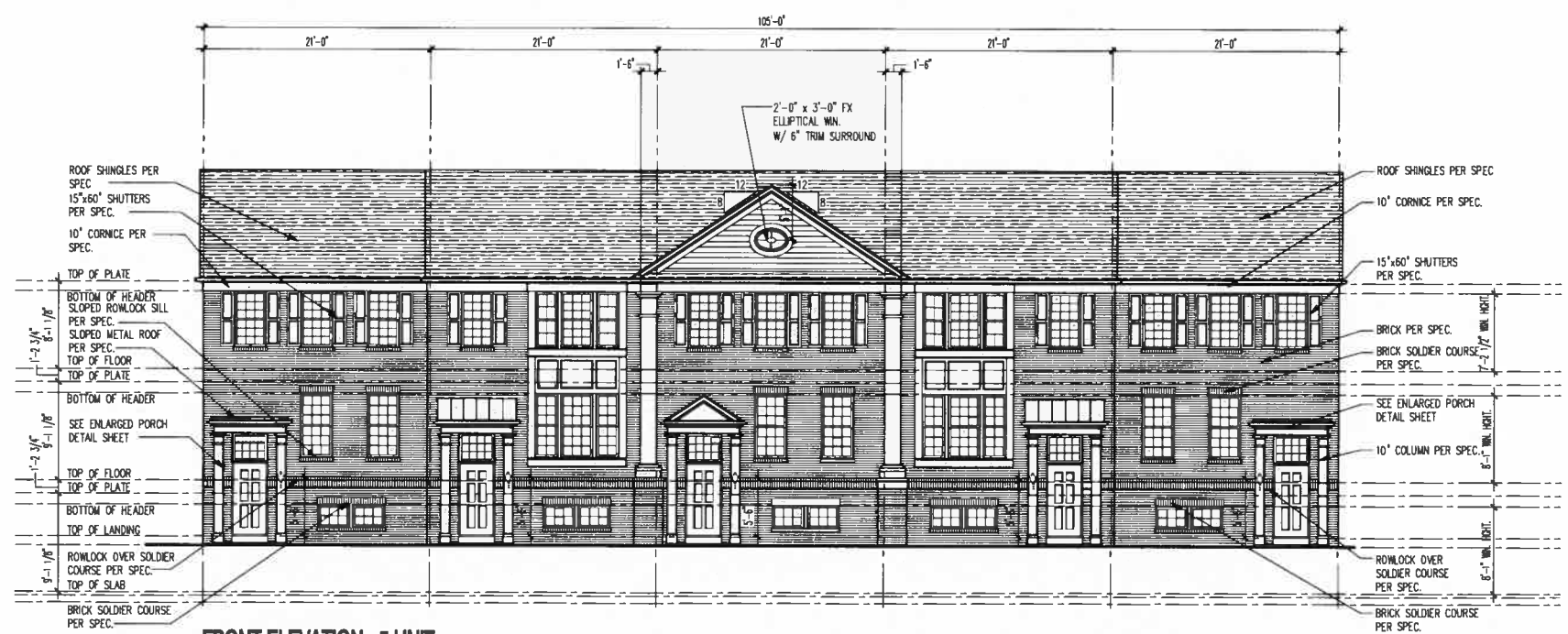

FRONT ELEVATION - 5 UNIT

SCALE 1/8" = 1'-0"

NOTE:

1. ADDRESS BLOCK SHALL BE ETCHED STONE OR BRASS PLATE - VERIFY FINAL LOCATION WITH VILLAGE.
2. ALL ROOF STYLE AND COLOR SHALL BE THE SAME FOR ALL BUILDINGS.

PLOTTED: November 14, 2013 / Luis Godoco / 0837-IN-1M-1-5-UNIT.DWG

(c) Copyright Pulte Home Corporation - 2013

Indiana Division
11590 North Meridian Street, Suite 530
Carmel, Indiana 46032

Pulte Homes

Front & Side Elevations - 5 Unit

PRODUCTION MANAGER
ANDY KUNZ
CURRENT RELEASE DATE: 11/08/2013

REV #	DATE / DESCRIPTION
△	- -
△	- -
△	- -
△	- -
△	- -
△	- -
△	- -
△	- -

NOTE: SCALES NOTED ON DRAWINGS RELATE TO FULL SIZE PLOTS ON 22x34 SHEETS - 11x17 SHEETS REPRESENT 1/2 SCALE PLOTS

PROJECT TYPE
Multi-FAMILY

COMMUNITY NAME
VIKING MEADOW 1
LAWSON COMMUNITY ID

GARAGE HANDING

SPECIFICATION LEVEL

PLAN NAME
PROVIDENCE
NPC PLAN NUMBER
0837
LAWSON PLAN ID

LEGACY PLAN NUMBER / NAME

SHEET
5-7.00

ATTIC VENT SCHEDULE

PROVIDENCE - ELEV. 1 AND 2

ROOF AREA "A"			SQ FTG	756	VENTILATION TYPE					
VENT LOCATION	SQ. FT. REQUIRED RANGE		SQ. FT. SUPPLIED	PERCENT OF TOTAL SUPPLIED	AT RIDGE			AT EAVE		
					POT 1	POT 2	RIDGE	EACH	CONT 1	CONT 2
					61.00	40.00	18.00	28.00	10.00	6.67
AT RIDGE	1.01	1.26	1.50	51.92	0	0	12.00	N/A	N/A	N/A
AT EAVE	1.51	1.26	1.39	48.08	N/A	N/A	N/A	0	20.00	0.00
TOTAL	2.52	2.52	2.89	100.00	CONTRACTOR TO VERIFY CORRECT VENTS USED IN FIELD					

VENT AREAS BASED ON AIR VENT MODELS: RVA 40, S.P. SHINGLEVENT II, 4x16 SOFFIT VENT and SOVEREIGN SELECT SOFFIT

** CONTRACTORS INSTALLING VENTILATION SHALL BE RESPONSIBLE FOR VERIFYING CODE COMPLIANCE FOR ANY OPTIONS AFFECTING THESE CALCULATIONS

ROOF AREA "B"			SQ FTG	756	VENTILATION TYPE					
VENT LOCATION	SQ. FT. REQUIRED RANGE		SQ. FT. SUPPLIED	PERCENT OF TOTAL SUPPLIED	AT RIDGE			AT EAVE		
					POT 1	POT 2	RIDGE	EACH	CONT 1	CONT 2
					61.00	40.00	18.00	28.00	10.00	6.67
AT RIDGE	1.01	1.26	1.31	51.22	0	0	10.50	N/A	N/A	N/A
AT EAVE	1.51	1.26	1.25	48.78	N/A	N/A	N/A	0	18.00	0.00
TOTAL	2.52	2.52	2.56	100.00	CONTRACTOR TO VERIFY CORRECT VENTS USED IN FIELD					

VENT AREAS BASED ON AIR VENT MODELS: RVA 40, S.P. SHINGLEVENT II, 4x16 SOFFIT VENT and SOVEREIGN SELECT SOFFIT

** CONTRACTORS INSTALLING VENTILATION SHALL BE RESPONSIBLE FOR VERIFYING CODE COMPLIANCE FOR ANY OPTIONS AFFECTING THESE CALCULATIONS

ATTIC VENTILATION NOTES

1. R806.2 MINIMUM VENT AREA.
THE MINIMUM NET FREE VENTILATING AREA SHALL BE 1/150 OF THE AREA OF THE VENTED SPACE.
EXCEPTION: THE MINIMUM NET FREE VENTILATION AREA SHALL BE 1/300 OF THE VENTED SPACE PROVIDED ONE OR MORE OF THE FOLLOWING CONDITIONS ARE MET.

1. IN CLIMATE ZONES 6, 7 AND 8, A CLASS I OR II VAPOR RETARDER IS INSTALLED ON THE WARM-IN-WINTER SIDE OF THE CEILING.

2. AT LEAST 40 PERCENT AND NOT MORE THAN 50 PERCENT OF THE REQUIRED VENTILATING AREA IS PROVIDED BY VENTILATORS LOCATED IN THE UPPER PORTION OF THE ATTIC OR RAFTER SPACE. UPPER VENTILATORS SHALL BE LOCATED NO MORE THAN 3 FEET (914 MM) BELOW THE RIDGE OR HIGHEST POINT OF THE SPACE, MEASURED VERTICALLY, WITH THE BALANCE OF THE REQUIRED VENTILATION PROVIDED BY EAVE OR CORNICE VENTS. WHERE THE LOCATION OF WALL OR ROOF FRAMING MEMBERS CONFLICTS WITH THE INSTALLATION OF UPPER VENTILATORS, INSTALLATION MORE THAN 3 FEET (914 MM) BELOW THE RIDGE OR HIGHEST POINT OF THE SPACE SHALL BE PERMITTED.

2. AN ICE BARRIER THAT CONSISTS OF AT LEAST TWO LAYERS OF UNDERLAYMENT CEMENTED TOGETHER OR OF A SELF-ADHERING POLYMER MODIFIED BITUMEN SHEET, SHALL BE USED IN LIEU OF NORMAL UNDERLAYMENT AND EXTENDED FROM THE EAVE'S EDGE TO A POINT AT LEAST 24 INCHES BEYOND THE INTERIOR SIDE OF THE EXTERIOR WALL LINE OF THE BUILDING PER I.R.C. SECTION R905.2.7.1. - SEE ALSO TYPICAL WALL SECTIONS.

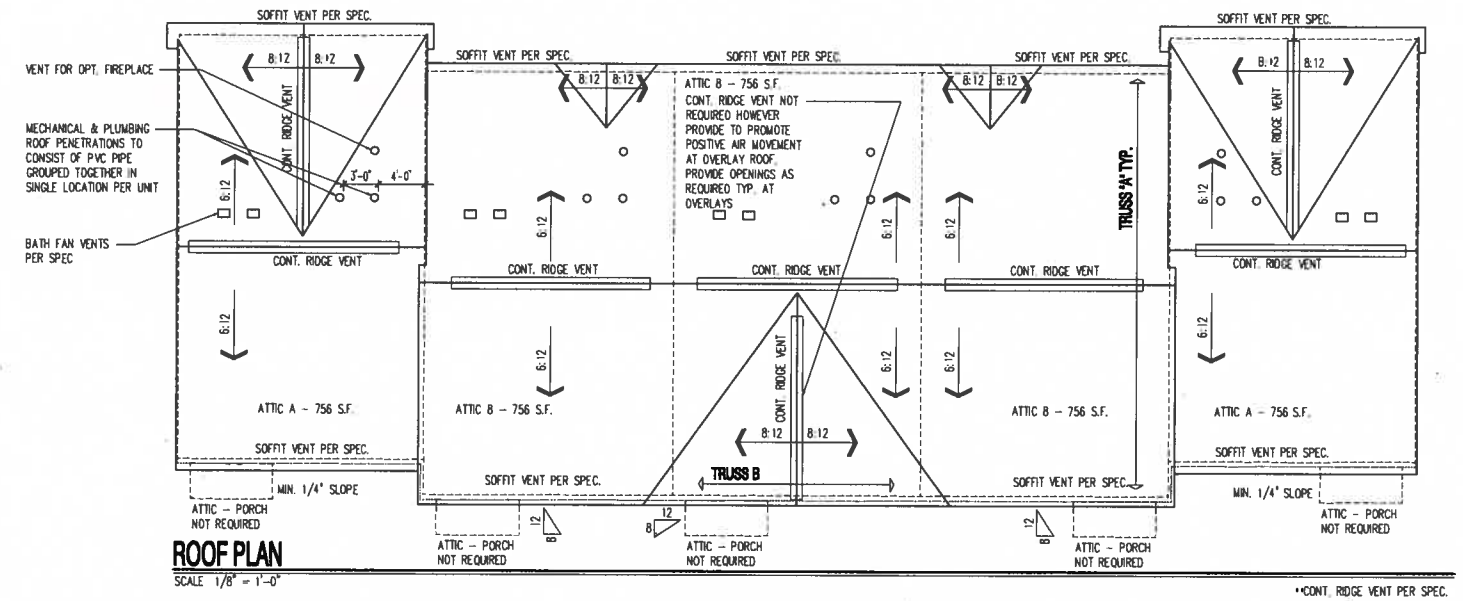

ROOF PLAN

SCALE 1/8" = 1'-0"

*CONT. RIDGE VENT PER SPEC. SEALED 48" EACH SIDE OF FIRE SEPERATION WALL (TYP.)

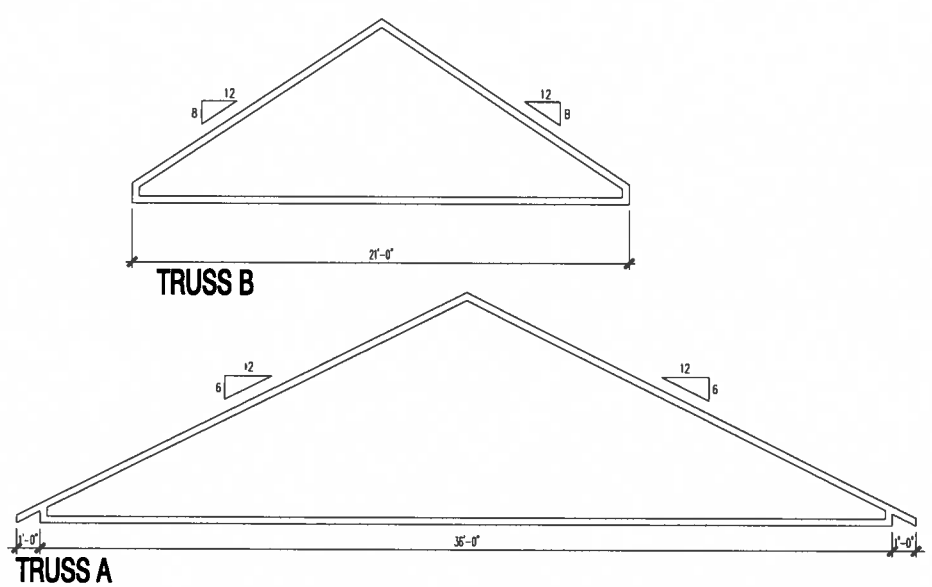

NOTE !!
THESE PROFILE DRAWINGS ARE TO INDICATE DESIGN INTENT ONLY. TRUSS MANUFACTURER IS RESPONSIBLE FOR VERIFYING SPANS - OVERHANGS - LOADS PITCHES - HEELS HGTS ETC.

SCHEMATIC ROOF TRUSS PROFILES

SCALE 1/4" = 1'-0"

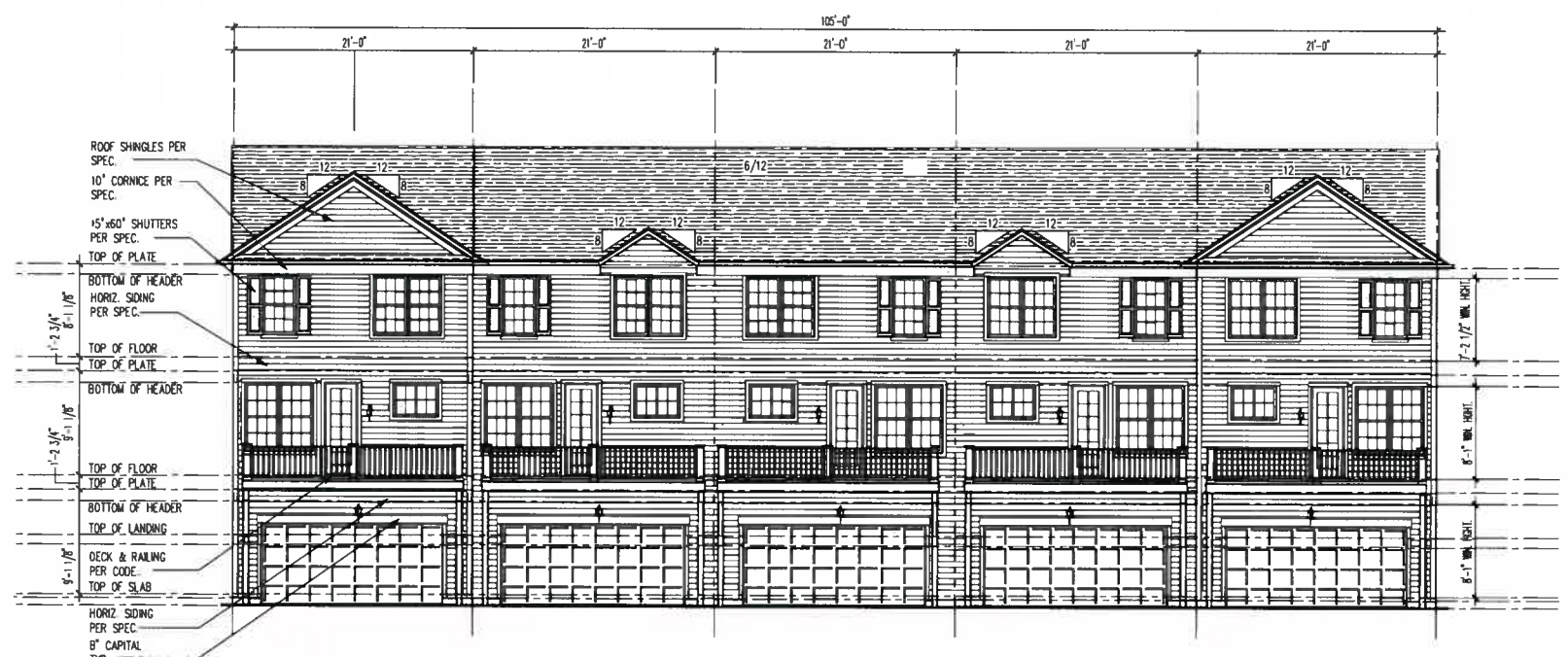

REAR ELEVATION - 5 UNIT

SCALE 1/8" = 1'-0"

NOTE:
1. ADDRESS BLOCK SHALL BE ETCHED STONE OR BRASS PLATE - VERIFY FINAL LOCATION WITH VILLAGE.
2. ALL ROOF STYLE AND COLOR SHALL BE THE SAME FOR ALL BUILDINGS.

(c) Copyright Pulte Home Corporation - 2013

Indiana Division
11590 North Meridian Street, Suite 530
Carmel, Indiana 46032

Pulte Homes

Rear Elevation & Roof Plan - 5 Unit

PRODUCTION MANAGER
ANDY KUNZ
CURRENT RELEASE DATE: 11/08/2013

REV #	DATE / DESCRIPTION

PROJECT TYPE
Multi-FAMILY

COMMUNITY NAME
VIKING MEADOW 1

LAWSON COMMUNITY ID

GARAGE HANDING

SPECIFICATION LEVEL

PLAN NAME
PROVIDENCE

HPC PLAN NUMBER
0837

LAWSON PLAN ID

LEGACY PLAN NUMBER / NAME

SHEET
5-7.01

NOTE: SCALES NOTED ON DRAWINGS RELATE TO FULL SIZE PLOTS ON 22x34 SHEETS - 11x17 SHEETS REPRESENT 1/2 SCALE PLOTS

PLOTTED: November 14, 2013 / Luis Godoco / 0837-IN-VM-1-5-UNIT.DWG