CONSTRUCTION PLANS
FOR
NORTHWALK RESIDENTIAL COMMUNITY
740 N. UNION STREET
WESTFIELD, INDIANA
PREPARED FOR:
THE ANDERSON CORPORATION
301 S. UNION STREET
WESTFIELD, IN 46074

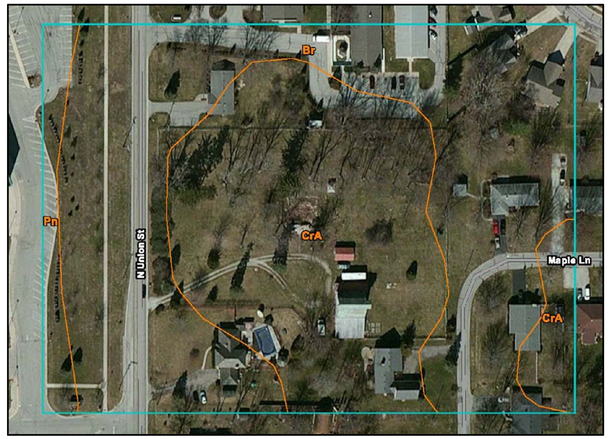

SOILS MAP
1" = 100'

CrA - Crosby Silt Loam
Br - Brookston Silty Clay Loam

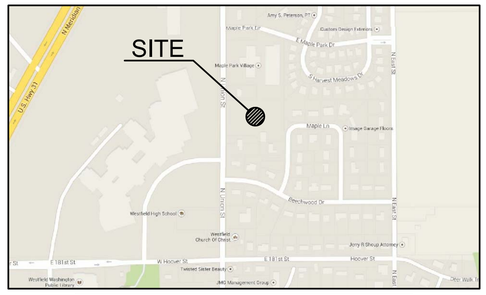

AREA MAP
1" = 500'

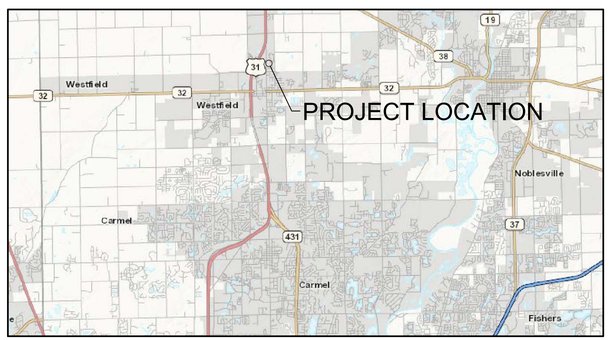

LOCATION MAP
1" = 10,000'

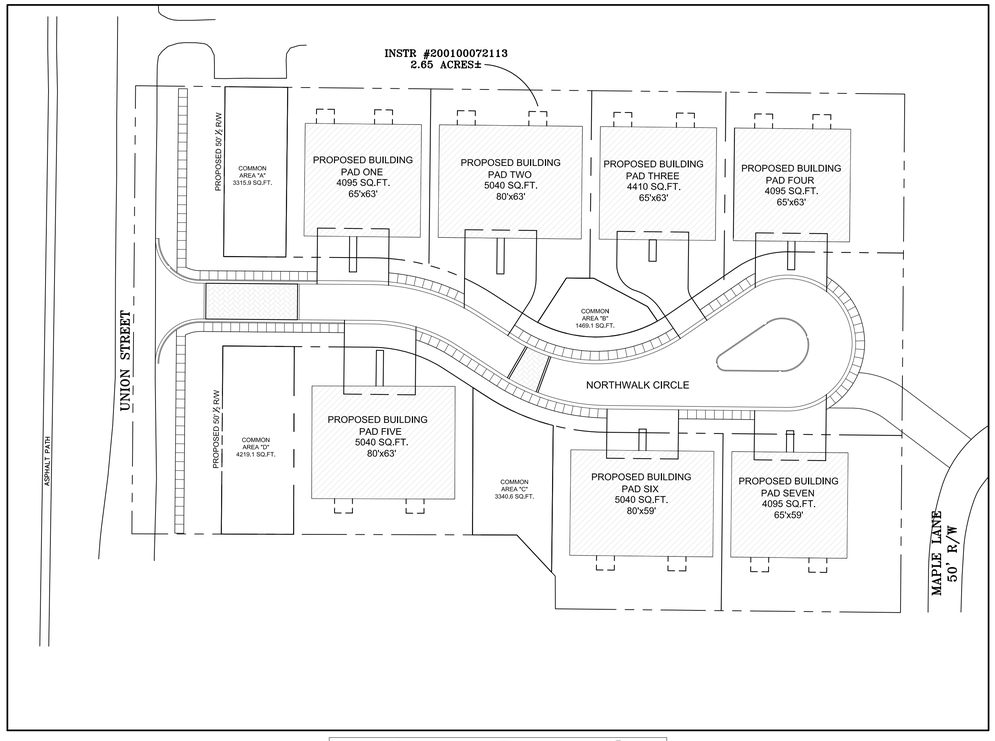

SITE LAYOUT
1" = 40'

PLAN INDEX		
	SHEET #	SHEET TITLE
●	C000	COVER SHEET
●	C001	SPECIFICATIONS
●	C002	SPECIFICATIONS
●	C003	SPECIFICATIONS
●	C004	SPECIFICATIONS
●	C005	SPECIFICATIONS
●	C006	SPECIFICATIONS
●	C007	SPECIFICATIONS
●	C008	SPECIFICATIONS
●	C009	GENERAL NOTES
●	1 OF 2	ALTA / LAND TITLE SURVEY (BY OTHERS)
●	2 OF 2	ALTA / LAND TITLE SURVEY (BY OTHERS)
●	C100	TREE PRESERVATION PLAN
●	C101	TRAFFIC MAINTENANCE PLAN
●	C200	SITE PLAN
●	C201	ROADWAY PLAN AND PROFILE
●	C300	GRADING PLAN
●	C301	DRAINAGE PLAN
●	C400	STORMWATER POLLUTION PREVENTION PLAN (SWPPP)
●	C401	EROSION CONTROL (SWPPP) NOTES
●	C402	EROSION CONTROL (SWPPP) NOTES
●	C403	EROSION CONTROL (SWPPP) DETAILS
●	C404	POST CONSTRUCTION (SWPPP)
●	C500	UTILITY PLAN
●	C501	SANITARY SEWER PLAN AND PROFILE
●	C700	SANITARY SEWER DETAILS
●	C701	SITE DETAILS
●	C702	SITE DETAILS
●	C703	SITE DETAILS
●	C704	UNDERGROUND DETENTION DETAILS
●	C705	UNDERGROUND DETENTION DETAILS
●	C706	UNDERGROUND DETENTION DETAILS
●	LP101	LANDSCAPE PLAN
●	LP102	LANDSCAPE DETAILS & SPECIFICATIONS

"●" INDICATES SHEETS INCLUDED

PLAN DATE: 5/9/14

UTILITY STATEMENT:

THE UTILITIES INDICATED ON THESE PLANS AND ON THE SURVEY HAVE BEEN LOCATED FROM FIELD SURVEY INFORMATION. THE SURVEYOR/ENGINEER MAKES NO GUARANTEES THAT THE UNDERGROUND UTILITIES COMPRISE ALL SUCH UTILITIES IN THE AREA, EITHER IN-SERVICE OR ABANDONED. THE SURVEYOR DOES CERTIFY THAT THEY ARE LOCATED AS ACCURATELY AS POSSIBLE FROM INFORMATION AVAILABLE. THE SURVEYOR/ENGINEER HAS NOT PHYSICALLY LOCATED THE UNDERGROUND UTILITIES.

811 Know what's below. Call before you dig.

PLANS PREPARED BY :
ELEMENTS ENGINEERING, LLC
6213 BEHNER WAY
INDIANAPOLIS, IN 46250
317-490-7054
www.elements-engineering.com

ELEMENTS Engineering, LLC

JENNIFER L RAMEY LICENSED PROFESSIONAL ENGINEER STATE OF INDIANA 19900 — APPROVED PENDING FOR CONSTRUCTION

05/09/14

PROJECT NUMBER
13-76-001

DESIGN PHASE
PLAN REVIEW

PLAN NUMBER
C000

TOWN OF WESTFIELD

DEPARTMENT OF PUBLIC WORKS

WESTFIELD, INDIANA

UTILITY AND INFRASTRUCTURE CONSTRUCTION STANDARDS AND SPECIFICATIONS

FOR

PAVING AND SURFACING
WATER MAINS
STORM SEWER
SANITARY SEWER
FORCE MAIN
SUBMERSIBLE LIFT STATION

October 2006

FOREWARD

The enclosed Standard Construction Standards Details and Specifications (standards and specifications) are provided to outline the Town of Westfield's (Town) minimum criteria for construction of infrastructure and appurtenances within the jurisdiction of the Westfield Public Works Department (WPWD).

All construction projects that are to become part of the Town's system for operation and maintained by the Town shall conform to the latest. Construction drawings and specifications must be stamped and signed by a registered professional engineer, in the State of Indiana, shall be approved by the WPWD, and be in accordance with these standards and specifications before construction begins. All construction plans must include a copy of these standards and specifications. A PDF version of this document can be obtained via the information below.

All construction plans and specifications must be submitted to the WPWD for review and will be stamped by the WPWD Plan Reviewer once the plans and specifications are found to be in compliance with all Town standards and specifications.

The Town now issues all sanitary sewer construction permits and water main extension permits. In addition, sanitary sewer plans and water main extension plans must be accompanied by the appropriate application and supporting documentation. There is a $300 permit fee for each permit. Any storm water storage or conveyance system must be submitted to the WPWD. For any storm water storage or conveyance system discharging to a drain regulated by the Hamilton County Surveyor must have plans submitted to that entity for approval as well as the WPWD.

Before any off-site (property not owned by the developer) utility construction can commence, all permanent and/or temporary easements shall be executed and conveyed to the Town.

Performance bonds for all infrastructure to be constructed shall be submitted to the WPWD and approved by the Town before construction can commence.

Construction observation shall be provided by the WPWD. A preconstruction conference is required a minimum of 48 hours notice shall be given prior to starting construction. A preconstruction conference can be scheduled by contacting the WPWD Plan Reviewer at 317-896-5452.

These standards were prepared with the intent of obtaining the highest quality of construction possible. As new materials become available and acceptable, the standards may be revised and updated.

Copies of the standards may be obtained from the Town of Westfield website via http://www.westfield.in.gov/egov/docs/1111162413893.htm or the Westfield Public Works Department (contact information below).

Westfield Public Works Department
2706 East 171st Street
Westfield, Indiana 46074
Phone: 317-896-5454
Fax: 317-867-0202

SECTION 00200 - INDEX

GENERAL SPECIFICATIONS

00100 Foreword
00200 Index
01001 General Requirements

DETAILED SPECIFICATIONS

Section	Description
02101	Temporary Erosion and Dust Control
02222	Earthwork for Utilities
02310	Horizontal Directional Drilling
02500	Paving and Surfacing
02501	Standards of Roadway Geometric Design
02502	Standards of Roadway Construction
02503	Standards for Utility Construction
02504	Adjacent Roadway Improvements
02558	Identification/Location Tape
02660	Water Mains
02721	Storm Sewers
02731	Gravity Sanitary Sewers
~~02732~~	~~Force Mains~~
02750	Sewer Televising
~~11319~~	~~Submersible Lift Station~~

SECTION 01001 - GENERAL REQUIREMENTS

1.1 DEFINITIONS

A. Whenever used in these specifications the following terms have the meanings indicated which are applicable to both the singular and plural thereof:

1. Town - The Town of Westfield, represented by the Town Council.
2. Westfield Public Works Department – An agency of the Town which manages public infrastructure within its jurisdiction. (WPWD)
3. Developer - Person or firm having control of the development site, and management of the project.
4. Contractor - The person, firm or corporation with whom the developer has entered into an agreement for construction of the project.
5. Project - The total construction of which the work to be provided may be the whole or part.
6. Work - The entire completed construction or the various separately identified parts thereof required to be furnished.

1.2 WORK TO BE PERFORMED

Work to be performed shall be in accordance with drawings and specifications approved by the Town.

1.3 SAFETY AND HEALTH REGULATIONS FOR CONSTRUCTION

The Contractor shall be solely responsible for all obligations prescribed as employer obligations under Chapter XVII of Title 29, Code of Federal Regulations, Part 1926, otherwise known as "Safety and Health Regulations for Construction." All contractors performing work within the Town's jurisdiction must meet with WPWD's Safety Coordinator as part of the required preconstruction conference prior to beginning work.

1.4 DISCOVERY OF HAZARDOUS MATERIAL

If, during the course of installing Town infrastructure, the existence of hazardous material, including asbestos containing material, is observed in the work area, the Contractor shall immediately notify the Developer in writing. The Contractor shall not perform any work pertinent to the hazardous material prior to receipt of

special instructions from the Town of Westfield. Asbestos containing material includes transite pipe.

1.5 EASEMENTS

A. The Developer will obtain utility and/or drainage easements over and through certain private lands for construction. The width or limits of such easements will be defined by the Town, and all permanent and/or temporary easements shall be executed and conveyed to the Town before any construction can commence. If the methods of construction employed by the Contractor are such as to require the use of land beyond the limits obtained, he shall make his own agreements with the property owners affected for the use of such additional land.

B. In all such utility and/or drainage easements, the Contractor shall be required to carefully remove the property owner's fences, or other obstacles to the construction procedure, and replace the same after the work is installed. The backfilling shall be to the grade of the existing ground level or to the grade as established by the property owner in the event the property owner permits the deposit of excess material upon such land.

C. The cost of all such restoration of property shall be borne by the Contractor.

1.6 OPERATIONS WITHIN RIGHT-OF-WAY

In public thoroughfares, all operations of the Contractor, including those of temporary nature, must be confined within the applicable right-of-way limits after having obtained approval of the Town or other Local Governing Entity. If the methods of the construction employed by the Contractor are such as to require the use of land beyond the public thoroughfares, he shall make his own agreements with the property owners affected for the use of such additional.

1.7 PERMITS

A. The Developer will obtain permits which relate to the completed facilities. Permits obtained by the Developer include permits from the following:

1. Town of Westfield
2. Department of Natural Resources
3. U.S. Army Corps of Engineers
4. Indiana Department of Fire Prevention & Building Safety
5. Indiana Department of Transportation
6. Railroads
7. Hamilton County Surveyor's Office

8. Hamilton County Highway Department

B. The Contractor shall obtain permits which relate to construction procedures.

1. All necessary permits or licenses required from the State, County, or Town or other Local Governing Entity in connection with construction procedures under or along existing highways shall be obtained by and at the expense of the Contractor. The construction shall be performed by the Contractor in full accordance with any and all requirements of the State Highway Commission, County Road Commission, WPWD, or other Local Governing Entity including those applying to barricades, watchmen, guarding, lighting, storage of supplies, equipment and excavated materials, method of backfilling, final grading, replacement of pavement or road surface, and all other conditions or requirements which may be stipulated by the State Highway Commission, County Road Commission, or WPWD, whether specifically shown on the drawings or mentioned in the specification.

1.8 MAINTAINING TRAFFIC

A. Before closing any thoroughfare, the Contractor shall notify and, if necessary, obtain a permit or permits from the duly constituted public authority having jurisdiction, state, county, city/town. The contractor will be responsible for notifying the local school corporation, all public safety agencies and the Town. The Contractor shall provide the WPWD a detour route plan for review prior to the road closure.

B. The Contractor shall notify the Town of his intention to close a particular street 72 hours in advance of the proposed closing. The Contractor shall place all proper detour signs and barricades prior to the actual street closing.

C. During the construction, the Contractor shall be responsible for maintaining and protecting the pedestrian and vehicular traffic at all times on all streets involved and providing access to all residential and commercial establishments adjacent to the construction area. The Contractor shall furnish and maintain signage, barricades, flares, etc., in accordance with the latest version of the Indiana Manual on Uniform Traffic Control Devices. The signage, barricades, etc., must be in good condition.

D. The Contractor shall conduct his work in such a manner as not to unduly or unnecessarily restrict or impede normal traffic through the streets of the community. Insofar as it is practicable, do not locate excavated material

and spoil banks in such manner as to obstruct traffic. Keep the traveled way of all street, roads, and alleys clear and unobstructed insofar as is possible. Do not use streets, roads, or alleys for the storage of construction materials, equipment supplies, or excavated earth, except when and where necessary. If required by duly constituted public authority, the Contractor shall, at his own expense, construct bridges or other temporary crossing structures over trenches so as not to unduly restrict traffic. Such structures shall be of adequate strength and proper construction and shall be maintained by the Contractor in such manner as not to constitute an undue traffic hazard. Private driveways shall not be closed, except when and where necessary, and then only upon due advance notice to the WPWD and Homeowner, and for the shortest practicable period of time, consistent with efficient and expeditious construction. The Contractor shall be liable for any damage to persons or property resulting from his work.

E. Streets in which excavation has occurred shall be temporarily restored to receive traffic as soon as possible. Permission to close additional streets shall be denied if, in the opinion of the Town, the restoration on streets where excavation has occurred has not progressed satisfactorily.

1.9 WALKS AND PASSAGEWAYS

The Contractor, when required, shall make provisions at cross streets for the free passage of vehicles and foot passengers, either by bridging or otherwise. Do not obstruct the sidewalks, gutters, or streets, or prevent in any manner the flow of water in streets. Use all proper and necessary means to permit the free passage of surface water along the gutters. The Contractor shall immediately remove all matter, exercising such precaution as may be directed by the Town. All material excavated shall be so disposed of as to inconvenience the public and adjacent tenants as little as possible and to prevent injury to trees, sidewalks, fences, and adjacent property of all kinds. The Contractor may be required to erect suitable barriers to prevent such inconvenience or injury.

1.10 WARNING LIGHTS AND ARROW BOARDS

The Contractor shall place sufficient warning lights and arrow boards on or near the work and keep them illuminated during periods of construction and reduced visibility (from twilight in the evening until sunrise) and shall be held responsible for any damages that any party or the Developer may sustain in consequences of neglecting the necessary precaution in prosecuting this work.

1.11 UTILITIES

A. Temporary Removal: All existing Town utility systems which conflict with the construction of the work herein which can be temporarily

removed and replaced shall be accomplished at the expense of the Developer with approval from the WPWD. Work shall be done by the WPWD unless the WPWD approves, in writing, that the work may be done by the Developer or Contractor.

B. Permanent Relocation of Utilities: Water mains, storm sewer, gas lines, wire lines, service connections, water and gas meter boxes, water and gas valve boxes, light and traffic standards, cable ways, signals, and other utility appurtenances located in the public right-of-way which would permanently interfere with the proposed improvements will be moved by the utility involved and paid for by the Developer.

1.12 SUBMITTALS - CERTIFICATE OF COMPLIANCE

The Developer shall upon request of the Town Council or the WPWD, submit to the WPWD a Certificate of Compliance from the manufacturer and/or supplier of each and every specified material or manufactured equipment item. The Certificate shall state that the material or the item of equipment to be furnished has been manufactured with materials in accordance with the applicable sections of all required codes, specifications, and standards as required by the specifications.

1.13 MANUFACTURER'S SERVICE TIME

A. When a lift station or other equipment is to be furnished by the Developer or Contractor and maintained in the future by the WPWD, service by the manufacturer is required to be furnished as part of the work and shall be at the Contractor's expense.

B. The service provided shall be by a qualified representative to check the completed installation, place the equipment in operation, and instruct the Town's operators in the operation and maintenance procedures.

C. The services shall further demonstrate to the Town's complete satisfaction that the equipment will satisfactorily perform the functions for which it has been installed.

1.14 DIGITAL AS-BUILTS/RECORD DRAWINGS

The Developer will be responsible for preparation and submittal of digital as-builts/record drawings as required by the requirements set forth in the Town's Digital As-built requirements. A copy of the most recent requirements are available on the Town's website at http://www.westfield.in.gov/egov/docs/1157135335_990447.pdf. Additional information can also be received from the WPWD GIS Division.

END OF SECTION 01001

SECTION 02101 - TEMPORARY EROSION AND DUST CONTROL

PART 1 - GENERAL

1.1 Please see chapter 600 of the Town of Westfield Stormwater Manual.

END OF SECTION 02101

SECTION 02222 - EARTHWORK FOR UTILITIES

PART 1 - GENERAL

1.1 DESCRIPTION

A. Scope: Specifications for the stripping of topsoil and vegetation, excavation, trenching, bedding, filling, backfilling, compaction, and related work in connection with the installation of water mains, gravity sanitary sewers, storm sewers, and force mains are included in this Section.

B. Definitions

1. Excavation: Removal of earth and rock to form a trench for the installation of a water main, gravity sanitary sewer, storm sewer, or force main.
2. Earth: Unconsolidated material in the crust of the Earth derived by weathering and erosion. Earth includes:

a. Materials of both inorganic and organic origin;
b. Boulders less than 1/3 cubic yard in volume, gravel, sand, silt, and clay;
c. Materials which can be excavated with a backhoe, trenching machine, drag line, clam shell, bulldozer, highlift, or similar excavating equipment without the use of explosives, rock rippers, rock hammers, or jack hammers.

3. Rock: A natural aggregate of mineral particles connected by strong and permanent cohesive forces. Rock includes:

a. Limestone, sandstone, dolomite, granite, marble, and lava;
b. Boulders 1/3 cubic yard or more in volume;
c. Materials which cannot be excavated by equipment which is used to remove earth overburden without the use of explosives, rock rippers, rock hammers, or jack hammers;
d. Materials which cannot be excavated with a backhoe, trenching machine, drag line, clam shell, bulldozer, high-lift, or similar excavating equipment without the use of explosives, rock rippers, rock hammers, or jack hammers.

4. Undercutting: Excavation of rock and unsuitable earth below the bottom of the pipe or conduit to be installed in the trench.
5. Subgrade: Undisturbed bottom of a trench.
6. Bedding: Earth placed in trench to support pipe and conduit.

7. Backfill and Fill: Earth placed in trench from the top of bedding to finished grade, or to subbase of pavement.
8. Topsoil: Earth containing sufficient organic materials to support the growth of grass.

1.2 SITE CONDITIONS

Existing storm sewers, sanitary sewers, water mains, gas mains, electric ducts, fiber optic ducts, telephone ducts, steam mains and other under-ground structures, lines, and their house connections are to been shown on the plans according to the best available information. The exact location and protection of these facilities and structures, their support and maintenance in operation during construction (in cooperation with the proper authorities), is the responsibility of the Contractor.

PART 2 - PRODUCTS

2.1 BEDDING

A. Class I bedding shall be angular 6 to 12 mm (1/4 to 1/2 inch) graded stone, coral, crushed stone or crushed shells.

B. Class II bedding shall be coarse sands and gravels with maximum particle size of 20 mm (3/4 inch). Class II bedding includes variously graded sands and gravels containing small percentage of fines generally granular and non-cohesive, either wet or dry. Soil types GW (well-graded gravel), SW (well-graded sand), and SP (pea gravel and/or crushed stone mixed with sand) are included in this class.

2.2 BACKFILL

A. General: Backfill shall be earth of such gradation and moisture content that the soil will compact to the specified density and remain stable. Unsuitable materials shall not be used.

B. Cover Material: Pipe cover material shall consist of durable particles ranging in size from fine to coarse (No. 200 to 1 inch) in size in a substantially uniform combination. Unwashed bank run sand and crushed bank-run gravel will be considered generally acceptable. Bedding material may be used for cover material.

C. Granular Backfill - Special Backfill: Granular backfill, when indicated on the plans or as ordered by the Engineer, shall be used for backfilling providing it meets the following soils classified by the Unified Soils Classification System ASTM D-2487 or the Indiana State Highway Standard Specification Section 211 - Special Fill and Backfill ("B" Borrow).

Group Symbols	Typical Names
GW	Well-graded gravels and gravel-sand mixtures, little or no fines
GP	Poorly graded gravels and gravel-sand mixtures, little or no fines
SW	Well-graded sands and gravelly sands, little or no fines
SP	Poorly graded sands and gravelly sands, little or no fines

D. Suitable Excavated Materials as Backfill: Excavated material shall be used when earth backfill is specified on the plans or where granular backfill or flowable fill is not specifically specified, provided that such material consists of loam, clay, or other materials which, are suitable for backfilling. Unsuitable backfill or frozen backfill material shall not be used. Suitable backfill shall be the following soils, classified by the Unified Soil Classification System, ASTM D-2487:

Group Symbols	Typical Names
GW	Well-graded gravels and gravel-sand mixtures, little or no fines
GP	Poorly graded gravels and gravel-sand mixtures, little or no fines
GM	Silty gravels, gravel-sand-silt mixtures
GC	Clayey gravels, gravel-sand-clay mixtures
SW	Well-graded sands and gravelly sands, little or no fines
SP	Poorly graded sands and gravelly sands, little or no fines
SM	Silty sands, sand-silt mixtures
SC	Clayey sands, sand-clay mixtures

ML	Inorganic silts, very fine sands, rock flour, silty or clayey fine sands
CL	Inorganic clays of low to medium plasticity, gravelly clays, sandy clays, silty clays, lean clays

E. Unsuitable Materials: Materials which are unsuitable for backfill include stones greater than 8 inches in their largest dimension, pavement, rubbish, debris, wood, metal, plastic, and the following soils, classified by the Unified Soil Classification System, ASTM D-2487:

Group Symbols	Typical Names
OL	Organic silts and organic silty clays of low plasticity
MH	Inorganic silts, micaceous or diatomaceous fine sands or silts, elastic silts
CH	Inorganic clays of high plasticity, fat clays
OH	Organic clays of medium to high plasticity
PT	Peat, muck, and other highly organic soils

F. Concrete Backfill: Concrete used for backfill around sewers, water mains, or other utility piping shall be Class B concrete.

G. Cellular Concrete: Light weight cellular concrete may be used for filling of abandoned sewers as a grouting mixture for filling voids and as a substitute for backfill concrete in tunnels or casing pipes. The cellular concrete shall be produced by blending preformed foam with cement-sand grout slurry to produce a concrete having a fresh weight per cubic foot of not less than 75 pounds.

H. Flowable Fill

1. Flowable fill shall be in accordance with INDOTSS Section 213 and as specified herein.

a. Unconfined Compressive Strength (28 day): 50-150 psi
b. Flow Test - Diameter of Spread: 8 inches ± 1 inch

2. Design: Mix design shall be required to be submitted and approved by the WPWD or designated engineer. A trial batch

CITY OF WESTFIELD SPECIFICATIONS CAN BE FOUND AT: http://www.westfield.in.gov/egov/apps/document/center.egov?view=item;id=50

ELEMENTS
Engineering, LLC
6213 Behner Way
Indianapolis, IN 46250
(317) 490-7054

THE ANDERSON CORPORATION
301 S. UNION STREET
WESTFIELD, IN 46074

NORTHWALK RESIDENTIAL COMMUNITY
740 N. UNION STREET
WESTFIELD, IN 46074

CITY OF WESTFIELD SPECIFICATIONS

JENNIFER L. ROBERTS REGISTERED PE19900155 STATE OF INDIANA PROFESSIONAL ENGINEER
APPROVAL PENDING NOT FOR CONSTRUCTION

DATE:

DWN BY:	CC
CHKD. BY:	JR
SCALE:	N/A
DATE:	4/4/2014

PROJECT NUMBER
13-76-001

DESIGN PHASE
PLAN REVIEW

PLAN NUMBER
C001

demonstration may be required. The mix design shall include a list of all ingredients, the source of all materials, the gradation of all aggregates, the names of all admixtures and dosage rates, and the batch weights. Except for adjustments to compensate for routine moisture fluctuations, minor mix design changes after the trial batch verification shall be documented and justified prior to implementation by the Contractor. A change in the source of materials or addition or deletion of admixtures or cementitious materials will require the mix design to be re-submitted for approval. The Contractor shall be required to provide test data from a laboratory which shows that the proposed mix design is in accordance with the requirements listed in this specification.

PART 3 - EXECUTION

3.1 EXISTING UTILITIES, STRUCTURES, AND PROPERTY

A. All poles, fences, sewer, fiber optic, gas, water or other pipes, wires, conduits and manholes, railroad tracks, buildings, structures and property along the routes of water mains, force mains, and sewers shall be supported and protected from damage by the Contractor.

B. Movable items such as mail boxes may be temporarily relocated during construction. Place movable items in their original location immediately after backfilling is completed, unless otherwise shown on the drawings. Replace movable items which are damaged during construction.

C. The Contractor shall proceed with caution in the excavation and preparation of trenches so that the exact location of underground utilities and structures, both known and unknown, may be determined. The Contractor shall be responsible for the repair of utilities and structures when broken or otherwise damaged.

D. Whenever, in the opinion of the WPWD, it is necessary to explore and excavate to determine the location of underground structures, the Contractor shall make explorations and excavations for such purpose.

E. Wherever sewer, gas, water, or other pipes or conduits cross the trench, the Contractor shall support said pipes and conduits without damage to them. The manner of supporting such pipes, etc., shall be subject to the approval of the owner of the utility involved.

F. When utility lines that have to be removed or relocated are encountered within the areas of operations, the Contractor shall notify the WPWD or

the owner of that utility in ample time for the necessary measure to be taken to prevent interruption of the service.

G. The Contractor shall so conduct the work that no equipment, material, or debris will be placed or allowed to fall upon private property in the vicinity of the work unless he shall have first obtained the property owner's written consent thereto and shall have shown said written consent to the Town.

H. All excavated material shall be piled in a manner that will avoid obstructing sidewalks and driveways. Hydrants under pressure, valve pit covers, valve boxes, curb stop boxes, fire and police call boxes, or other utility controls shall be left unobstructed and accessible until the work is completed. Gutters shall be kept clear or other satisfactory provisions made for street drainage, and natural watercourses shall not be obstructed.

I. All streets, alleys, pavements, parkways, and private property shall be thoroughly cleaned of all surplus materials, earth, and rubbish placed thereon by the Contractor.

3.2 CLEARING

A. Clear and remove logs, stumps, brush, vegetation, rubbish, and other perishable matter from the project site as required to perform work.

B. Do not remove or damage trees that do not interfere with the work. Completely remove trees required to be removed, including stumps and roots. Properly treat damaged trees which can be saved.

C. Debris from the tree removal, including trunk, branches, leaves, roots and stumps, shall not be buried or burned on the job site, but must be completely hauled away and disposed of at the Contractor's expense.

D. Clear and remove trees, logs, stumps, brush, vegetation, rubbish, and other perishable matter from the existing and proposed right of way.

3.3 STRIPPING AND STOCKPILING OF TOPSOIL

A. Strip topsoil and vegetation from the excavated areas. Clean topsoil may be stockpiled for reuse as the upper 6 inches of the areas to be seeded.

3.4 PAVEMENT AND WALK REMOVAL

A. Remove existing pavement and walks from the excavated areas. Remove excavated asphaltic and concrete materials from the job site as these materials are excavated.

B. The width of pavement removed along the normal trench for the installation of pipe and structures shall not be less than two (2) feet on either side of the trench and be in accordance with Standard Detail P-18. Remove all existing pavement when the excavation requires the removal of 75% or more of the total existing pavement width. If over 50% of one travel lane is disturbed, restoration must be extended to the centerline of the roadway..

C. Remove walks completely when excavation is along the length of a walk and requires the removal of part of the walk. Remove walks to existing joints in the walks when excavation crosses walks. If there are no joints in an existing walk, the width of walk removed shall not exceed the width of the trench by more than 12 inches on each side of the trench.

D. Use methods to remove pavement and walks that will assure the breaking or cutting of pavement and walks along straight lines. The face of the remaining pavement and walk surfaces shall be approximately vertical.

E. All concrete sidewalk and asphalt multiuse path removed must be replaced per the WPWD Standards Section 02500 and Standard Details P-10, P-11, and P-16. All restoration work is subject to inspection by WPWD.

3.5 EXCAVATING

A. General: After stripping of topsoil and vegetation, perform excavations of every description regardless of material encountered within the grading limits of the project to lines and grades as indicated on the drawings or as otherwise specified.

1. Materials removed below the depths indicated shall be replaced to the indicated excavation grade with satisfactory bedding materials placed and compacted. The Contractor will minimize over excavation.

B. Dewatering: Keep excavations free from water until the water mains, force mains, sewers, structures, and appurtenances to be constructed in the excavations are completed and will safely withstand forces from water. Provide sufficient dewatering equipment and make satisfactory arrangements for the disposal of the water without undue interference with other work, damage to property, or damage to the environment.

1. Operate dewatering equipment ahead of pipe laying and keep the water level below the pipe invert until the pipe is secured by backfill.

C. Trenching: Trees, boulders, and other surface encumbrances, located so as to create a hazard to employees involved in excavation work or in the vicinity thereof at any time during operations, shall be removed or made safe before excavating is begun.

1. Do not open more than 100 feet of trench in advance of the installed pipe, unless otherwise directed or permitted by the WPWD or designee. Excavate the trench within 6 inches of full depth for a distance of at least 30 feet in advance of the pipe laying, unless otherwise directed or permitted.
2. Contractor shall be responsible for the determination of the angle of repose of the soil in which the trenching is to be done. Excavate all slopes to at least the angle of repose except for areas where solid rock allows for line drilling or presplitting, or where shoring or trench box is to be used.
3. Sides, slopes, and faces of all excavations shall meet accepted engineering requirements by scaling, benching, barricading, rock bolting, wire meshing, or other equally effective means. Give special attention to slopes which may be adversely affected by weather or moisture content.
4. Flatten the trench sides when an excavation has water conditions, silty materials, loose boulders, and areas where erosion, deep frost action, and slide planes appear.
5. Shoring, sheeting, trench box, or other means shall be used to support sides of trenches in hard or compact soil when the trench is more than 5 feet in depth and 8 feet or more in length. Sides of trenches shall include embankments adjacent to trenches. In lieu of shoring, the sides of the trench above the 5-foot level may be sloped to preclude collapse, but shall not be steeper than a 1-foot rise to each 1/2-foot horizontal. Provide a bench of 4 feet minimum at the toe of the sloped portion of the trench wall when the outside diameter of the pipe to be installed is greater than 6 feet.
6. Use diversion ditches, dikes, or other suitable means to prevent surface water from entering an excavation and to provide adequate drainage of the area adjacent to the excavation. Do not allow water to accumulate in an excavation. If possible, the grade should be away from the excavation.
7. Excavations shall be inspected by a competent Contractor's representative after every rainstorm or other hazard-increasing

occurrence, and the protection against slides and cave-ins shall be increased, if necessary.
8. Do not store excavated or other material nearer than 4 feet from the edge of any excavation. Store and retain materials as to prevent materials from falling or sliding back into the excavation. Install substantial stop log or barricades when mobile equipment is utilized or allowed adjacent to excavations.
9. The width of trenches in earth for water main pipe, sewers, basin connections, house connections, and other drains up to and including 33 inches in internal diameter shall provide a clearance of not less than 8 inches or more than 10 inches on each side of the pipe. Trenches for pipe larger than 33 inches in internal diameter shall provide a clearance of not less than 10 inches or more than 14 inches on each side of the pipe.
10. The maximum clear width of trenches in earth for manholes shall be the greatest external width of the structure plus the space necessary for the construction and removal of the forms and construction of masonry work.
11. The design of the water main, force main, and/or sewer pipe and structures is predicated upon the width of trench specified in this Article. The Contractor shall be responsible for the provision and installation, at his own expense, of such remedial measures as may be directed by the WPWDor designee; should the trench width limits specified in this Article be exceeded.
12. Test the air in excavations in locations where oxygen deficiency or gaseous conditions are possible. Establish controls to assure acceptable atmospheric conditions. Provide adequate ventilation and eliminate sources of ignition when flammable gases are present. Attended emergency rescue equipment, such as breathing apparatus, a safety harness and line, and basket stretcher, shall be readily available where adverse atmospheric conditions may exist or develop in an excavation.
13. Provide walkways or bridges with guardrails where employees or equipment are required or permitted to cross over excavations.
14. Provide ladders where employees are required to be in trenches 4 feet deep or more. Ladders shall extend from the floor of the trench to at least 3 feet above the top of the excavation. Locate ladders to provide means of exit without more than 25 feet of lateral travel.
15. Provide adequate barriers and physically protect all remotely located excavations. Barricade or cover all wells, pits, shafts, and similar excavations. Backfill temporary wells, pits, shafts, and similar excavations upon completion of exploration and similar operations.

D. Quicksand: Carry on the work with utmost vigor and proceed with the work expeditiously when running sand, quicksand, or other bad or treacherous ground is encountered. Install bedding to support the pipe as directed.

E. Blasting: Removal of rock from the excavation may be facilitated by the use of controlled explosives.

1. Blasting supervision and Blasting Monitoring and Control Programs shall meet the requirements of this Section.
2. Storage procedures for explosives shall be developed by the Contractor and submitted to the Engineer before explosives are brought to the job site.

3.6 SHEETING

A. The Contractor shall be responsible for construction means, methods, techniques, and procedures, and for providing a safe place for the performance of the work by the Contractor, Subcontractors, suppliers and their employees, and for access use, work, or occupancy by all authorized persons.

B. The Contractor shall be solely responsible for all obligations prescribed as employer obligations under Chapter XVII of Title 29, Code of Federal Regulations, Part 1926, otherwise known as "Safety and Health Regulations for Construction."

C. Adequate supporting systems, such as sheeting, shoring, piling, cribbing, and bracing shall be furnished and installed by the Contractor as required to protect existing buildings, utilities, and property from damage during the progress of the work.

3.7 STORAGE AND REMOVAL OF EXCAVATED MATERIAL

A. Suitable excavated material required for filling and backfilling operations may be stockpiled in on-site locations, at the discretion of the WPWD or designee, until the material is ready to be placed.

B. Remove unsuitable materials from the job site as unsuitable materials are excavated. Remove surplus suitable materials from the job site as trenches are backfilled.

3.8 TEMPORARY PLUGS

Prevent foreign matter from entering pipe while it is being installed. Do not place debris, tools, clothing, or other material in the pipe. Close the open ends of pipe by securing watertight plugs when pipe laying is not in progress. Remove any earth or other material that enters pipe, lateral pipe, or appurtenances through any open pipe end.

3.9 BACKFILLING WATER MAIN AND FORCE MAIN TRENCHES

A. Backfilling of water main and force main trenches shall meet the requirements of ANSI/AWWA C600, unless otherwise specified in this Section.

B. Do not backfill trenches and excavations until all utilities have been inspected by the WPWD or designee and until all underground utilities and piping systems are installed in accordance with the requirements of the specifications and the drawings. Required hydrostatic tests may be applied to the line either before and after the trench is backfilled, subject to approval of the WPWD or designee.

C. Place and tamp bedding and backfill in a manner which will not damage pipe coating, wrapping, or encasement.

D. Material from the trench subgrade to the centerline of the pipe shall be Class II bedding. Place bedding by hand or approved mechanical methods in layers of 8 inches loose depth. Compact bedding by hand tamping or with a power operated hand vibrating compactor. Deposit bedding in the trench for its full width on each side of the pipe simultaneously.

E. Place pipe cover material from the centerline of the pipe to 12 inches over the pipe. Compact pipe cover material to the density required to allow backfill over the pipe cover material to be compacted to the density specified in this Article.

F. Do not use the following materials for backfill:

1. Unsuitable materials;
2. Frozen materials;
3. Materials which are too wet or too dry to be compacted to the densities specified in this Article.

G. Where the edge of the trench is within 5 feet of the existing roadway pavement, it shall be backfilled with Flowable Backfill. Where the trench is located within existing pavement or any trench specifically indicated on the drawings shall be backfilled with Flowable Backfill. Where the edge of the trench is within 5 feet or crosses a proposed roadway pavement, it shall be backfilled with Flowable Backfill. Place Flowable Backfill in lifts. In all areas, cuts and trenches shall be backfilled with Flowable backfill to within 1 ½" inches of the existing asphalt paved surface The remainder of the trench is to be filled with crushed stone and compacted in place, prior to opening the street to traffic. The Contractor shall add crushed stone and grade until sufficient settlement has taken place and final restoration is made.

3.10 BACKFILLING SANITARY SEWER AND STORM SEWER TRENCHES

A. Do not backfill trenches and excavations until all utilities have been inspected by the WPWDor designee and until all underground utilities and piping systems are installed in accordance with the requirements of the specifications and the drawings.

B. Place and tamp bedding and backfill in a manner which will not damage pipe coating, wrapping, or encasement.

C. Bedding procedures for sanitary sewers and storm sewers shall be as specified in Manufacturer's recommendation, or WPWD specifications. The more stringent specification will apply..

D. If bedding does not cover the pipe, place pipe cover material from the top of bedding to 12 inches over the pipe. Compact pipe cover material to the density required to allow backfill over the pipe cover material to be compacted to the density specified in this Article.

E. Do not use the following materials for backfill:

1. Unsuitable materials;
2. Frozen materials;
3. Materials which are too wet or too dry to be compacted to the densities specified in this Article.

F. Where the edge of the trench is within 5 feet of or crosses the existing roadway pavement, it shall be backfilled with Flowable Backfill. Backfill any trench specifically indicated on the drawings with Flowable Backfill.

G. Trenches Not Requiring Special Backfill: Backfill trenches not requiring granular backfill with suitable excavated material. Place and compact backfill to produce an adequate foundation for the applicable paved or unpaved surface treatment. Fill and restore any settlement of the backfill. In paved areas, backfill shall be maintained to subbase elevation. In unpaved areas, backfill shall be mounded above finish grade to allow for settlement. Grade unpaved area to be restored 6 inches below finish grade after settlement of backfill and immediately before restoration of vegetated areas. Place 6 inches of topsoil over area to be restored.

H. Trenches in Traveled Pavements: All cuts and trenches in paved streets or other paved areas shall be backfilled with flowable fill material.

3.11 MAINTAINING TRAFFIC

A. Before closing any thoroughfare, the Contractor shall notify and, if necessary, obtain a permit or permits from the duly constituted public authority having jurisdiction, state, county, city/town, school corporation, and public safety agencies.

B. The Contractor shall notify the Town of his intention to close a particular street 72 hours in advance of the proposed closing. The Contractor shall place all proper detour signs and barricades prior to the actual street closing.

C. During the construction, the Contractor shall be responsible for maintaining and protecting the pedestrian and vehicular traffic at all times on all streets involved and providing access to all residential and commercial establishments adjacent to the construction area. The Contractor shall furnish and maintain signage, barricades, flares, etc., in accordance with the latest version of the Indiana Manual on Uniform Traffic Control Devices. The signage, barricades, etc., must be in good condition.

D. The Contractor shall conduct his work in such a manner as not to unduly or unnecessarily restrict or impede normal traffic through the streets of the community. Insofar as it is practicable, do not locate excavated material and spoil banks in such manner as to obstruct traffic. Keep the traveled way of all street, roads, and alleys clear and unobstructed insofar as is possible. Do not use streets, roads, or alleys for the storage of construction materials, equipment supplies, or excavated earth, except when and where necessary. If required by duly constituted public authority, the Contractor shall, at his own expense, construct bridges or other temporary crossing structures over trenches so as not to unduly restrict traffic. Such structures shall be of adequate strength and proper construction and shall be maintained by the Contractor in such manner as

not to constitute an undue traffic hazard. Private driveways shall not be closed, except when and where necessary, and then only upon due advance notice to the WPWD and Homeowner, and for the shortest practicable period of time, consistent with efficient and expeditious construction. The Contractor shall be liable for any damage to persons or property resulting from his work.

3.12 WALKS AND PASSAGEWAYS

The Contractor, when required, shall make provisions at cross streets for the free passage of vehicles and foot passengers, either by bridging or otherwise, and shall not obstruct the sidewalks, gutters, or streets, nor prevent in any manner the flow of water in the latter, but shall use all proper and necessary means to permit the free passage of surface water along the gutters. The Contractor shall immediately cart away all offensive matter, exercising such precaution as may be directed by WPWD or designee. All material excavated must be so disposed of as to inconvenience the public and adjacent tenants as little as possible and to prevent injury to trees, sidewalks, fences, and adjacent property of all kinds. The Contractor may be required to erect suitable barriers to prevent such inconvenience or injury.

3.13 WARNING LIGHTS

The Contractor shall place sufficient warning lights on or near the work and keep them illuminated during periods of reduced visibility (from twilight in the evening until sunrise) and will be held responsible for any damages that any party or the Town may sustain in consequences of neglecting the necessary precaution in prosecuting this work.

3.14 CLEANUP AND MAINTENANCE

A. Cleanup the job site as backfilling is completed. Remove excess earth, rock, bedding, materials, and backfill materials. Remove unused piping materials, structure components, and appurtenances. Restore items moved, damaged, or destroyed during construction. Grade area to be restored. Leave backfill mounded over trenches which are not backfilled with Special Backfill. Cleanup and restoration specified in this paragraph shall be completed within 1,000 feet of excavation.

B. Restoration of grass, bushes, trees, and other plants shall be completed by Contractor to original or better condition.

C. Restoration of pavement and walks shall be specified in Section 02500, Paving and Surfacing. A temporary driving surface, such as crushed stone, shall be compacted in place in the trench area as backfilling is complete. Cold-mix asphalt patching material may be used as a temporary

driving surface at the Contractor's option or when specifically called for in the plans or specifications. Temporary pavement shall not be more than 1,000 feet behind the excavation. When no existing pavement remains after excavation, a temporary compacted aggregate surfacing may be provided instead of the permanent pavement or a temporary cold-mix asphalt pavement.

D. Maintain the job site until the work has been completed and accepted. Fill trenches which settle when settlement is visible. Restore items damaged by construction or improper restoration. Keep dust conditions to minimum by the use of water.

END OF SECTION 02222

SECTION 02310 – HORIZONTAL DIRECTIONAL DRILLING

PART 1 – GENERAL

1.1 DESCRIPTION OF WORK

The CONTRACTOR shall provide all investigation, planning, geotechnical work, equipment, labor, etc. necessary to properly install the proposed directional bores as indicated on the construction using horizontal directional drilling (directional boring) technology. Pipe materials shall match those indicated on the plans.

1.2 SUBMITTALS

Shop drawings and manufacturer's literature shall be submitted to the WPWD Engineer for approval.

PART 2 – PRODUCTS:

2.1 PRESSURE PIPE AND FITTINGS FOR HORIZONTAL DIRECTIONAL DRILLING

A. Ductile iron pipe for horizontal directional drilling

1. Ductile Iron Pipe for horizontal directional drilling shall be restrained and boltless flexible joint pipe as approved by the WPWD Engineer.

2. The Ductile Iron Pipe material shall meet the minimum requirements of Technical Specification Section 02550. Additionally, the joints shall meet the requirements of ANSI/AWWA C111/A21.11.

3. Approved manufacturer includes the American Cast Iron Pipe Company and Griffin Pipe Products Company.

B. Polyvinyl chloride pipe (pvc) for horizontal directional drilling

1. Products delivered under this specification shall be manufactured only from water distribution pipe and couplings conforming to AWWA C900 or AWWA C905, as appropriate for the size of the watermain indicated on the plans. Pipe materials and joints shall be rated for 200 psi or greater.

2. Pipe and couplings shall be made from unplasticized PVC compounds having a minimum cell classification of 12454-B, as defined in ASTM D1784. Pipe, couplings, and locking splines shall be completely non-metallic. The compound shall qualify for a Hydrostatic Design Basis

(HDB) of 4000 psi for water at 73.4°F, in accordance with the requirements of ASTM D2837.

3. Pipe shall be joined using non-metallic couplings to form an integral system for maximum reliability and interchangeability. High-strength, flexible thermoplastic splines shall be inserted into mating, precision-machined grooves in the pipe and coupling to provide full 360° restraint with evenly distributed loading.

4. Couplings shall be designed for use at or above the rated pressures of the pipe with which they are utilized, and shall incorporate twin elastomeric sealing gaskets meeting the requirements of ASTM F477. Joints shall be designed to meet the leakage test requirements of ASTM D3139.

5. Approved manufacturer includes C900/RJ™ PVC restrained-joint pipe or C905/RJ™ PVC restrained-joint pipe from CertainTeed Corporation and any other manufacturer approved by WPWD Engineer.

C. High-density polyethylene (HDPE) for horizontal directional drilling

1. Pipes: HDPE forcemain pipe shall meet the requirements for Type III, Grade P345 Polyethylene Material as defined in ASTM Specification D-1248 (PE 3408). The minimum pressure class/SDR rating acceptable shall be Class 200/SDR 11. The pipe shall be DIPS and shall have an interior diameter no less than the piping that it is connected to.

2. Joints: Joints shall be of a heat fusion joining system. Pipe and fittings shall be thermal butt fusion, saddle fusion, or socket fusion in accordance with manufacturer recommended procedures and ASTM D-2161. At the point of fusion, the outside diameter and minimum wall thickness of the fitting shall match the outside diameter and minimum wall thickness specifications of ASTM D-1248 for the same size pipe.

Joining of the pipes and fittings shall be performed in accordance with ASTM D-2774. Depending upon the installation requirements and site location, joining shall be performed within or outside the excavation. Joints of the pipe sections shall be smooth on the inside and internal projection beads shall not be greater than 3/16 inch.

The tensile strength at yield of the butt-fusion joints shall not be less than the pipe. A specimen of the pipe cut across the butt-fusion joints shall be tested in accordance with ASTM D-638

The manufacturer shall provide fusion training. The contractor and the onsite joint inspector shall be trained by the manufacturer or manufacturer's authorized representative.

The fusion equipment and operator shall be required to demonstrate successful field experience. Regarding fusion over 36" capability, the fusion unit shall be field tested for a period of five years and the fusion operator shall have pipe size experience of the same size pipe on this project for five years or longer.

3. Fittings: All fitting shall be provided as indicated on the plans. HDPE Fittings shall be of the same material and class as the pipe and shall be manufactured by the manufacturer of the pipe. HDPE Elbows, tees, and wyes shall be manufactured by mitered fabrication. The manufacturer shall have a written specification for all standard mitered fittings, which establishes Quality Control criteria and tolerances. The manufacturer may be required to demonstrate its ability to produce product required by this specification.

Mechanical joint anchor fittings (MJ Adapter or Harvey Adapter) shall be used to transition from ductile iron to HDPE and from HDPE to PVC. The fitting shall be stronger than the pipe in that when it is subjected to tensile stress the pipe will pull apart before the fitting will pull out and the pipe will blow before the fitting will rupture under pressure.

The MJ Adapter shall have a pre-installed stainless steel stiffener, in accordance with Plastic Pipe Institute (PPI) recommendations, to neutralize point-loading, ACQ, creep and loss of gasket seal due to diameter contraction. The stiffener shall be engineered sufficiently thick to avoid redial buckling due to gasket pressure.

The MJ Adapter requires longer bolts and shall be sold with the modified longer bolt kit to avoid construction crew delays or improper installation with too short bolts.

All fittings for forcemains or pressure rated fittings shall be rated according to the manufacturer's written specifications, and clearly labeled on the fittings as such.

4. Installation: The installation shall conform to the requirements of the manufacturer, the AWWA Standard, and as indicated on the plans and specified herein.

5. Marking and Certification: Each length of HDPE sanitary sewer shall

be clearly marked with the Manufacturer's Name, Tradename or Trademark, Nominal pipe size, Pipe Stiffness, Production Code/Extrusion Code, Material Cell Class Designation and ASTM number.

The pipe manufacturer shall provide certification that the stress regression testing has been performed on the specific product. The said certification shall include a stress live curve per ASTM D-2837. The stress regression testing shall have been performed in accordance with ASTM D-2837, and the manufacturer shall provide a product supplying a minimum Hydrostatic Design Basis of 1,600 psi as determined by ASTM D-2837. This certification shall also state that the pipe was manufactured from one specific resin in compliance with these specifications. The certificate shall state the specific resin used and its source.

PART 3 – EXECUTION:

3.1 MATERIALS

A. Piping and conduits installed by horizontal directional drilling (directionally bore) shall be HDPE, PVC, DI or Steel as indicated in the plans and other sections of these specifications.

3.2 INSTALLATION

A. Depths of all existing utilities must be confirmed by the CONTRACTOR prior to the crossing to avoid conflicts. Equipment shall be utilized that does not require the conventional bore and receiving pits due to space constraints. Proper connection to the piping at each end shall be done by standard excavation. The CONTRACTOR shall be responsible to provide a slurry containment pit and shall remove all excess material and dispose of appropriately off-site upon completion. All erosion control facilities shall be provided to contain any solids from migrating beyond the project site. If the CONTRACTOR utilizes a subcontractor for this work, they shall provide proof of adequate comprehensive general liability insurance covering underground collapse and explosion and experience to the ENGINEER and OWNER for prior approval. The CONTRACTOR shall be required to provide all necessary water in accordance with other applicable sections of these specifications.

B. In all cases the manufacturer's recommendations and procedures shall be followed regarding the installation of their pipe material by horizontal directional drilling.

CITY OF WESTFIELD SPECIFICATIONS CAN BE FOUND AT: http://www.westfield.in.gov/egov/apps/document/center.egov?view=item;id=50

ELEMENTS
Engineering, LLC
6213 Behner Way
Indianapolis, IN 46250
(317) 490-7054

THE ANDERSON CORPORATION
301 S. UNION STREET
WESTFIELD, IN 46074

NORTHWALK RESIDENTIAL COMMUNITY
740 N. UNION STREET
WESTFIELD, IN 46074

CITY OF WESTFIELD SPECIFICATIONS

APPROVAL PENDING NOT FOR CONSTRUCTION

DATE:

DWN BY:	CC
CHKD. BY:	JR
SCALE:	N/A
DATE:	4/4/2014

PROJECT NUMBER
13-76-001

DESIGN PHASE
PLAN REVIEW

PLAN NUMBER
C002

C. Subsurface investigation, if deemed necessary, shall be provided prior to bids by the CONTRACTOR. No additional payments will be made if rock is encountered or if soil conditions require additional construction time and equipment. Proper equipment and methods shall be used in rock and soil bores to insure proper grades, elevations and separations.

D. All directional drilling operations shall be performed by a qualified directional drilling CONTRACTOR with at least (3) years experience involving work of a similar nature to the work required of this project. The CONTRACTOR must have installed a minimum of 10,000 linear feet of pipe (4-inch diameter or greater) using directional drilling operations. A list of project references and proof of contractor experience shall be presented to the ENGINEER, upon request by the ENGINEER.

E. The requirements of all applicable local and state authorities shall be followed by the CONTRACTOR.

F. The piping shall be installed at the minimum depths indicated in the plans and shall deviate no more than six inches along the vertical axis and 2' along the horizontal alignment.

G. The CONTRACTOR shall provide accurate As-Built data based on downhole survey data or a walkover location system that indicates x, y and z coordinates of the pipe at least every thirty (30) feet along the alignment or at a midpoint if the bore length is less than thirty (30) feet.

END OF SECTION 02310

SECTION 02500 – PAVING AND SURFACING

PART 1 - GENERAL

1.1 DESCRIPTION

A. Scope: This section covers all work involved in the installation of new pavement, walks, and curbs, and the repair and replacement of existing streets, roads, highways, drives, parking areas, curbs, gutters, sidewalks, and other paved areas damaged or destroyed during construction.

B. Related Work Specified in the following Section

1. Section 02222 Earthwork for Utilities Subgrade Preparation

C. Codes, specifications, and standards referred to by number or title shall form a part of this specification to the extent required by the reference thereto. Except as specifically modified in this specification, paving and surfacing operations, materials and testing will comply with the most current revisions of applicable sections per the latest version of the Indiana Department of Transportation Standard Specifications.

D. Definitions

1. Abbreviations

a. INDOTSS Indiana Department of Transportation's Standard Specifications.
b. AASHTO American Association of State Highway & Transportation Officials.
c. ACI American Concrete Institute.
d. ASTM American Society for Testing & Materials.
e. NRMCA National Ready Mix Concrete Association.

2. Rock: A natural aggregate of mineral particles connected by strong and permanent cohesive forces. Rock includes limestone, sandstone, dolomite, granite, marble, and lava.
3. Subgrade: The prepared and compacted soil immediately below the pavement or walk system and extending to such depth as will affect the structural design.
4. Subbase: The layer of specified or selected material of designed thickness placed on a subgrade to support a base course and surface course.

5. Base Course: The layer of specified or selected material of designed thickness placed on a subbase to support a binder or surface course.
6. Binder Course: The layer of specified or selected material of designed thickness placed on a base course to support a surface course.
7. Surface Course: The layer of specified or selected material of designed thickness placed on a subbase or base course to support the traffic load.

1.2 QUALITY ASSURANCE

A. The Developer/Contractor shall employ, at the request of the Westfield Public Works Department or designee, and pay for the services of an independent testing laboratory (unless otherwise noted) to perform specific services and necessary field density tests. The Developer/Contractor shall demonstrate to the Town of Westfield Public Works Department or designee that proper compaction has been obtained and proper asphalt and concrete mix designs are in compliance with the specifications.

B. Mixing Plant: Prior to placing any hot asphalt concrete pavement or Portland cement concrete pavement, the Contractor shall provide the Westfield Public Works Department or designee the name and location of the bituminous mixing or concrete mixing plant and the type and composition of mixes the Contractor proposes to use in the work.

C. Paving and surfacing shall comply with the tolerances specified in Sections 401.16 (Bituminous), 501.15, 501.16 and 501.23 of INDOTSS.

1. Subgrade and subbase shall be within 1/2 inch of dimensions indicated on drawings.
2. Bituminous base shall not vary longitudinally more than 1/4 inch from a 10-foot straightedge. Bituminous and concrete surfaces shall not vary more than 1/8 inch from a 10-foot straightedge.
3. Finished surface shall be within 1/4 inch of dimensions indicated on drawings.

D. Asphalt and concrete pavement shall be installed by a contractor whose prime business is asphalt or concrete paving.

1.3 JOB CONDITIONS

A. Do not place paving and surfacing materials on a wet surface, pumping subbase or when weather conditions would prevent the proper construction of paving and surfacing.

B. Do not place aggregates on frozen subgrade or subbase. Do not place aggregates when ambient air temperature is below 35°F.

C. Bituminous materials are to be placed in accordance with INDOTSS 402, 405.04, and 406.05.

D. When air temperatures are at or below 35 degrees F, an admixture is required to be added to the concrete to prevent freezing.

E. Do not place paving and surfacing materials when natural light is not sufficient to properly observe work or operations.

1.4 GRADE ADJUSTMENT OF EXISTING STRUCTURES

A. When grade adjustment of existing structures is required, the manhole frames, covers and gratings, and the gas and water valve boxes and covers, shall be removed and reconstructed to grade as required.

B. On resurfacing work, the castings and boxes shall be adjusted to grade after the last binder course has been laid and before placing the surface course.

C. All castings, frames and valve boxes adjusted to grade shall be done in advance of the final paving and shall be paid for by the Contractor as part of the project.

1.5 CONTRACTOR'S ORGANIZATION

A. The Contractor shall be a firm who's prime business is asphalt or concrete paving. The Contractor shall have a competent supervisor on the site during the progress of the work, acting for the Contractor in all matters concerning the work. He shall have the authority to receive directions and act upon them for the Town through the Westfield Public Works Department or designee.

B. The Contractor shall keep a set of Plans and Specifications available on the site and in good condition.

1.6 TRAFFIC CONTROL

The Developer's Engineer shall plan construction operations so that existing local traffic access can be maintained. During the construction, The Contractor will also maintain appropriate use of barricades, lights, flagmen and other protective devices, whether specified for the project or required by the local governing authority. Traffic control devices used for maintenance of traffic shall comply with the latest version of the Indiana Manual on Uniform Traffic Control Devices.

PART 2 - PRODUCTS

2.1 AGGREGATE

A. Fine aggregates shall consist of natural sand or manufactured sand produced by crushing rock, shells, air-cooled blast furnace slag, or wetbottom boiler slag.

1. Fine aggregates used in Portland cement concrete and bituminous pavements shall be free from injurious amounts of organic impurities. When subjected to the colorimetric test for organic impurities and a color darker than the standard is produced, it shall be tested for effect of organic impurities on strength of mortar in accordance with AASHTO T 71. If the relative strength at 7 and 28 days, calculated in accordance with section 10 of T 71, is less than 95%, it shall be rejected.

B. Coarse aggregates shall consist of clean, tough, durable fragments of crushed rock, crushed or uncrushed gravel or shells, or crushed and processed air-cooled blast furnace slag. These materials shall not contain more than 15% flat or elongated pieces and shall not contain particles with an adherent coating. Flat or elongated pieces will be described as pieces having a length in excess of four times its width.

C. Coarse aggregates shall comply with INDOTSS, Section 904.03. Fine aggregates shall comply with INDOTSS, Section 904.02.

2.2 BITUMINOUS MATERIALS

A. Petroleum asphalt cement shall be homogeneous, free from water, and shall not foam when heated to 347°F.

1. Petroleum asphalt cement shall be PG Binder, grade PG 64-22.
2. Petroleum asphalt emulsion shall be AE-60.

B. Bituminous materials for prime coat shall consist of:

1. Cut-back asphalt - MC-70; or
2. Asphalt emulsion - AE-P.
3. Materials shall conform to INDOTSS Sections 902.01 and 902.03.

C. Bituminous materials for tack coat shall consist of:

1. Asphalt emulsion - AE-T.
2. Materials shall conform to INDOTSS 902.01.

D. Bituminous materials for seal coat shall consist of:

1. Asphalt emulsion - RS-2, AE-90, AE-150, HFRS-2.
2. Materials shall conform to INDOTSS Sections 902.01.

E. Cover aggregate shall consist of:

1. Coarse aggregates, Class A or B, size no. 8, 9, 11 or 12.
2. Fine aggregate (natural sand only), size no. 23 or 24.
3. Materials shall conform to INDOTSS Sections 904.01 and 904.03, respectively.

2.3 HOT MIX ASPHALT (HMA)

A. Hot mix asphalt (HMA) shall consist of an intimate mixture of coarse aggregate, fine aggregate (including mineral filler if required), and asphalt cement or emulsion combined in proportions specified in INDOTSS Section 402.07.

B. When the use of one type or source of aggregate or binder is started, the use of that same type or source shall be continued for the entire lift being constructed, unless otherwise directed by the Engineer.

C. The use of recycled materials, RAP or ARS, shall not be permitted unless otherwise directed and approved by Engineer.

D. Preparation of HMA mixtures shall comply with the requirements of INDOTSS Section 402.07.

2.4 PORTLAND CEMENT CONCRETE

A. Cement shall be Portland cement and shall meet the requirements of ASTM Specification C 150, ACI 301, and ACI 318. Cement shall be Type 1 for normal use, Type 1A where air entrainment is desired, or Type III or Type IIIA where high early strength is desired and authorized by the Engineer. Blended hydraulic cements which meet the requirements of ASTM Specification C 595 Type 1P Portland pozzolan cement may be

used where a more watertight concrete is required. Fly ash may also be used as a partial cement replacement for Types 1 or 1A. Cement shall meet requirements specified in INDOTSS Section 901.

B. Regular fine and coarse aggregates shall meet the requirements of ASTM Specification C 33. Aggregate shall be crushed limestone with a maximum size of 3/4 inch, except in mass concrete the maximum size may be 11/2 inches.

1. Lightweight fine and coarse aggregates shall meet the requirements of ASTM Specification C 330.
2. Insulating fine and coarse aggregates shall meet the requirements of ASTM Specification C 332.

C. Water shall be potable, clean, and free from injurious amounts of oils, acids, alkalis, organic materials, or other substances that may be deleterious to concrete or steel. A maximum of 500 mg/L of chloride ion may be present in the water.

D. Air entraining admixtures shall meet the requirements of ASTM Specification C 260.

1. Water reducing and retarding admixtures shall meet the requirements of ASTM C494, Type A or Type D; however, they shall contain no chlorides, be nontoxic after 30 days and compatible with the air entraining admixtures. The amount of admixture added to the concrete shall be in accordance with the manufacturer's requirements. Furnish a compliance statement that the admixture used satisfies all requirements of this specification. Evidence that the admixture is included in the approved list of the INDOTSS Division of Materials and Tests, in accordance with INDOTSS Section 912.03, will satisfy the requirement for a compliance statement.
2. Fly ash shall meet the chemical and physical requirements of ASTM C 618 for mineral admixture Class F, except loss on ignition shall not exceed 6%. Fly ash shall be sampled and tested in accordance with ASTM C 311 prior to use.

E. Reinforcing steel shall meet the requirements of ASTM Specification A 615, Grade 60.

1. Welded wire fabric or wire mesh shall meet the requirements of ASTM A 185.
2. Reinforcing steel and appurtenances shall follow INDOTSS Section 910.01.

F. Preformed expansion joint filler shall meet the requirements of ASTM Specification D 1752, Type III.

1. Hot-poured elastic joint filler shall meet the requirements of ASTM Specification D 1190.
2. Waterproof expansion joint filler shall meet the requirements of ASTM Specification D 1850.
3. Joint materials specified in INDOTSS Section 906 may be used, approved by the Engineer.

G. Concrete pavement shall be wet cured by using burlap, waterproof blankets, or ponding; or by using a membrane compound. If the membrane method is used, the compound shall be Type 2, complying with AASHTO M148 for white pigmented compound. A pressure sprayer capable of applying a continuous uniform film to the pavement surfaces will be required.

H. Dowel bars shall be smooth, round bars of plain billetsteel conforming to ASTM A615, Grade 40, and free of any deformation or foreign material that would restrict slippage in concrete. Dowel bars shall be coated as required by INDOTSS. For expansion joints, each bar shall be provided with a metal cap, or approved plastic cap, on one end that will provide for ample movement of the slabs.

1. Dowel bars and assemblies shall conform to the requirements of INDOTSS Section 501.14 (f).

I. Concrete base shall meet the requirements of INDOTSS Section 305.

J. Reinforced concrete pavement shall meet the requirements of INDOTSS Section 501.

K. Reinforced concrete for sidewalks and steps shall meet the requirements of INDOTSS Section 604.

L. Reinforced concrete for curbing shall meet the requirements of INDOTSS Section 605.

2.5 UNDERDRAINS

Underdrain material shall be 6-inch polyethylene perforated subsurface drain pipe.

PART 3 - EXECUTION

3.1 GENERAL

A. The Contractor is responsible to provide equipment, workmanship and materials required to achieve a finished product that meets these specifications.

B. Use compaction equipment suitable to the material being placed. Compacting equipment shall include at least one piece of equipment capable of providing a smooth even surface on the pavement surface course.

C. Prior to placing paving and surfacing materials, shape subgrade as required to produce finished pavement grades and cross-sections shown on drawings.

D. Do not place paving and surfacing material before subgrade is reviewed (proof roll) and accepted by the Westfield Public Works Department or designee. Do not place paving and surfacing materials on a frozen or muddy subgrade.

E. Compact subgrade to not less than 100% of its maximum density as determined in accordance with AASHTO T99.

F. Provide adequate drainage at all times to prevent water from standing on subgrade, pavement or walks.

3.2 SUBGRADE

The subgrade material and testing shall comply with INDOTSS Section 207, before placement of subbase.

3.3 SUBBASE PREPARATION

Provide 8 inches of subbase in locations where pavement is to be placed on a material other than Special Backfill. Subbase shall meet the requirements of INDOTSS Section 302.

3.4 AGGREGATE BASE, SURFACE, OR SHOULDERS

A. Aggregate base, surface, or shoulders shall consist of crushed rock or gravel. The aggregate type shall be suitable for the area in which the project is located. The aggregate thickness shall be as shown on the drawings and as specified herein.

B. Aggregate shall be Type "A" mix, unless otherwise specified by the Westfield Public Works Department or designee.

C. Compacted aggregate materials and construction shall conform to INDOTSS Section 303.

D. If the required thickness of the aggregate (Type A) exceeds 4 inches, the material shall be placed and compacted in separate lifts no less than 2 inches nor more than 4 inches of compacted depth. If Type P aggregate is used, it may be placed in individual lifts with a thickness of up to 6 inches.

E. If spreading devices are used which will ensure proper depth and alignment, forms will not be required; otherwise, forms shall be required. Forms shall be of wood or steel, adequate in depth, straight, of uniform dimensions and equipped with positive means for holding the form ends rigidly together and in line. Segregation of material shall be avoided by any spreading method used. No payment will be made for aggregate placed beyond the dimensions shown on the drawings.

F. Compact material in each lift after material is spread and shaped. Compact material to not less than 100% of maximum dry density as determined by AASHTO T99. Use construction procedures, including sufficient wetting and number of passes, to ensure specified density is attained.

G. The Contractor shall employ an independent testing laboratory to perform field density tests to demonstrate proper compaction of aggregate surface pavement, if requested by the Westfield Public Works Department or designee.

H. In a brick surfaced street, unless specifically excepted and pending the structural adequacy of any remaining brick, the Contractor may remove all brick and enough base material to allow full width repaving using either a bituminous or concrete pavement; or of providing a HMA base and HMA intermediate for the full depth of the brick across the trench and then replace the entire street with 1 inch of HAC surface.

I. Unless otherwise shown on the drawings, the minimum section (excluding subgrade) of reinforced concrete shall be 6 inches of compacted #53, Type "A" aggregate base and 6 inches of 4,000 psi reinforced concrete.

J. Unless otherwise shown on the drawings, for a street with a brick base and an asphalt surface, the replacement section shall be full depth asphalt from the bottom of the brick base to the top of the asphalt surface. The top 1

inch shall be #11 HMA surface.

K. Unless otherwise shown on the drawings, for a street with a concrete base and an asphalt surface, the replacement section shall be a new concrete base, not less than 6 inches thick with #5 HMA base to within 1 inch of the existing grade and then 1 inch of #11 HMA surface.

L. Unless otherwise shown on the drawings, chip and seal pavements shall have 8 inches of compacted aggregate base (#53, Type "A" crushed stone) and 1 inch processed bituminous coated aggregate pavement placed and rolled.

M. Unless otherwise shown on the drawings, gravel pavement shall be replaced with 6 inches of #53, Type "A" compacted stone or gravel aggregate.

3.5 HOT MIX ASPHALT

A. This work shall consist of constructing one or more courses of HMA base, intermediate, and wedge leveling or surface mixtures on a prepared foundation in accordance with these specifications and in reasonably close conformance with the lines, grades, thicknesses, and typical cross sections shown on the plans or established by the Engineer.

1. If the required finished depth of any course is to exceed three times the top size of the aggregate used as shown by actual screen analysis, the course shall be constructed in two or more lifts, as directed.
2. Mix type shall be as indicated on the drawings, without exception, unless otherwise approved in writing by the Engineer.

a. Job mix formulas shall be prepared and submitted for approval in accordance with INDOTSS 402. The job mix formula shall include standard bituminous mixture information including, but not limited to, aggregate gradation, binder content, maximum specific gravity, and air voids.

3. Materials and construction requirements shall comply with the requirements of INDOTSS Section 402.

B. If the previously constructed course is granular, a prime coat will be required.

1. Apply prime coat uniformly at a rate of 0.25 to 0.80 gallon per square yard depending on condition of surface and amount of loose aggregate.
2. Apply prime coat with a pressure distributor. Temperature of prime coat shall not exceed 150°F.
3. Squeegee excess prime coat from the subbase surface. Correct deficient or skipped area.
4. Prime coat shall be placed in accordance with INDOTSS Section 405.07.

C. Place and spread bituminous base mixture with a bituminous paver. In areas inaccessible to a paving machine, place and spread bituminous base mixture by other acceptable mechanical or hand methods.

D. Tack coat shall be placed on existing bituminous or concrete surfaces before a new lift of bituminous material is added. Apply tack coat uniformly at a rate of 0.06 gallon per square yard (0.000252 ton per square yard).

1. Patch and clean existing surface. The surface shall be free of irregularities and provide a reasonably smooth and uniform surface to receive the tack coat. Remove and replace unstable corrugated areas with suitable patching materials.
2. Tack coat shall be placed in accordance with INDOTSS Sections 406.03 through 406.05.

E. Placement and compaction of hot mix asphalt (HMA) shall conform to INDOTSS Sections 402.10 through 402.16.

F. Place binder used for wedging or leveling, approaches and feathering by mechanical methods or acceptable hand methods for placing and spreading in accordance with INDOTSS Section 400.

3.6 SEAL COAT AND COVERING AGGREGATE (CHIP AND SEAL)

A. Application shall be as follows

Seal Type	Cover Aggregate Size Number	Rate of Application Per Square Yard: Aggregate Pounds	Rate of Application Per Square Yard: Bituminous Material Gallons at 60°F
1-Single Application (only AE-90 or AE-150)	23, 24	12-15	0.12-0.16
2-Single Application	12	14-17	0.29-0.33
5-First Application	11	16-20	0.36-0.40
Second Application	12	16-19	0.33-0.37

B. Seal coat and covering aggregate shall be placed in accordance with INDOTSS Sections 404.04 through 404.08.

3.7 PORTLAND CEMENT CONCRETE PAVEMENT

A. Portland cement concrete pavement shall consist of a coarse aggregate base (if required) and a reinforced or unreinforced Portland cement concrete surface, as shown on the drawings

1. Use No. 53, Type "A" coarse aggregate for subbase, unless otherwise shown or specified.
2. Pavement cross-section shall be as shown on drawings.

B. Where an aggregate base course is shown or specified, it shall be constructed in accordance with Article 3.3 of this specification.

C. Portland cement concrete pavement operations and materials shall comply with INDOTSS Section 501 unless otherwise specified by the Engineer.

1. Alternate equipment to that specified in INDOTSS, Section 501 shall be allowed provided that line, grade, surface, smoothness and other requirements of the specifications are met. The equipment used shall be subject to the approval of a Professional Engineer licensed in the State of Indiana.
2. Expansion and contraction joints shall be installed as indicated on the drawings or as required by INDOT standards. Expansion joints shall be required whenever new concrete abuts fixed objects or existing concrete surfaces, whether or not shown on the drawings.
3. Keyway construction, load transfer devices, tie bars and slab and ear reinforcement shall be installed as indicated on the drawings.
4. Unless otherwise shown on the drawings, the final finish of concrete pavement shall be by brooming, as set out as Method 1 in INDOTSS Section 504.03, to form a transverse skid-resistant finish.

5. The Contractor shall always have materials available to protect the surface of concrete against rain. These materials shall consist of burlap, curing paper or plastic sheeting.
6. New concrete pavement shall be protected by the Contractor until opening to traffic is approved by a Professional Engineer licensed in the State of Indiana. It shall not be opened to traffic until the field-cured concrete has attained a flexural strength of 550 psi, or a compressive strength of 3,500 psi. If such tests are not conducted, the pavement shall not be opened to traffic until 14 days after the concrete was placed. Before opening to traffic, the pavement shall be cleaned and permanent lane markings applied to the pavement.

3.8 WALKS

A. Walks shall consist of a coarse aggregate subbase and a reinforced concrete surface. Use No. 24 fine aggregate for subbase, unless otherwise shown. Concrete shall be Class "A", 4,000 psi concrete.

B. Subbase shall be 2 inches thick, and concrete shall be 4 inches thick, unless crossing driveways, of which it will be 6 inches thick, as shown on detail P-10..

C. Compact subbase to not less than 95% of maximum dry density, as determined in accordance with AASHTO T99.

D. Proportion, mix, and place concrete as specified in INDOTSS Sections 604 and 702. Walks shall have a broom surface finish. Edge all outside edges of walk and all joints with a 1/4inch radius edging tool.

E. Unless otherwise shown on the drawings, walks shall be divided into sections not more than five feet in length by dummy joints formed by a jointing tool with a 1/4-inch radius.

F. Form construction joints around all abutting structures and appurtenances such as manhole, utility poles, hatches, and hydrants. Install 1/2inch thick pre-molded expansion joint filler in construction joints. Expansion joint material shall extend for the full depth of the walk.

G. If existing sidewalk is to be removed and replaced with new sidewalk or new sidewalk extended from existing sidewalk, the existing sidewalk shall be removed to the nearest joint of suitable quality or as directed by the Westfield Public Works Department.

3.9 CURBS

A. The construction of curbs, combination curb and gutter, and integral curb and gutter shall be in accordance with these specifications and as shown on the plans and shall be in reasonably close conformance with the lines and grades shown on the plans or as directed by a Professional Engineer licensed in the State of Indiana.

B. Excavation for curbs shall be made to the required depth, and the subgrade or base upon which the curb is constructed shall be compacted to a firm, even surface to not less than 95% of maximum dry density as determined in accordance with AASHTO T99.

C. Concrete for curbs shall be Class A, 4,000 psi, as specified previously for Concrete Pavement.

D. The curbs shall be constructed by the use of wood or metal forms; or, if approved by a Professional Engineer licensed in the State of Indiana, the curb may be constructed using a curb slipform machine. Forms, if used, shall be straight, free from warped or bent sections, and shall extend for the entire depth of the curb and shall be securely held in place so that no deviation from alignment and grade will occur during placement of concrete. The concrete shall be consolidated by vibration or other acceptable methods. The top of the curb shall be floated smooth and the top outer corner rounded to a 1/4inch radius.

E. The face, top, and gutter of curbs shall not have deviations or irregularities of more than 1/4inch when checked with a 10-foot straightedge.

F. Construction joints shall be placed at 10-foot intervals, unless otherwise shown or directed by a Professional Engineer licensed in the State of Indiana. The joint shall be uniform, of 1/8 to 1/4 inch in width, and to a depth of approximately 2-1/2 inches. The joint may be formed using concrete tools, saw cut or formed by approved removable strips providing a straight joint at right angles to the length of curb. Joints shall be filled with specified bituminous joint filler material. Construction joints shall be formed around all abutting structures such as inlets and shall be as specified previously.

G. As soon as possible after placing and finishing of concrete, the curbing shall be moistened and kept moist for three days, or cured with the use of a specified membrane compound.

H. If existing curb is to be removed and replaced with new curb or new curb extended from existing curb, the existing curb shall be removed to the nearest joint.

CITY OF WESTFIELD SPECIFICATIONS CAN BE FOUND AT: http://www.westfield.in.gov/egov/apps/document/center.egov?view=item;id=50

ELEMENTS
Engineering, LLC
6213 Behner Way
Indianapolis, IN 46250
(317) 490-7054

THE ANDERSON CORPORATION
301 S. UNION STREET
WESTFIELD, IN 46074

NORTHWALK RESIDENTIAL COMMUNITY
740 N. UNION STREET
WESTFIELD, IN 46074

CITY OF WESTFIELD SPECIFICATIONS

APPROVAL PENDING NOT FOR CONSTRUCTION

DATE:

DWN BY: CC
CHKD. BY: JR
SCALE: N/A
DATE: 4/4/2014

PROJECT NUMBER
13-76-001

DESIGN PHASE
PLAN REVIEW

PLAN NUMBER
C003

I. During the placement of new concrete curb, utility marking shall be embossed into the top of the curb. The marking shall be a 2" high letter stamped into the concrete before the concrete sets up. The letters shall be located perpendicular from the utility feature that is being marked.

The letters shall be as follows:

G = Gas
C = Conduit
SS = Sewer Service Lateral
MH = Sanitary Manhole
W = Water
V = Water Valve
D = Subsurface Drain
S = Storm

3.10 LANE STRIPING

A. Lane striping is to be in accordance with all applicable standards of INDOTSS 808 and the construction plans.

B. Parking lots are to be striped with standard white road paint. Spaces to be striped shall be 10 feet 0 inches wide by 20 feet 0 inches long with 4 inch wide stripes.

C. Contractor will clean the new pavement surface to remove all dust, dirt, mud and debris prior to striping.

3.11 TESTING FOR HOT MIX ASPHALT (HMA)

A. At the discretion of the Westfield Public Works Department the Developer/Contractor shall employ and pay for the services of a competent independent testing laboratory to take cores at selected locations and perform described tests. Compaction requirements for HMA mixtures placed in accordance with INDOTSS Section 402 shall be controlled by in place density determined from cores cut from the compacted pavement. A minimum of two cores per section shall be cut for each course of each material or as directed by the Westfield Public Works Department. Sections are defined as a maximum of 1000 Mg (1041 ton) of HMA base or intermediate or 600 Mg (624 ton) of HMA surface. The transverse core location shall be located so that the edge of the core will be no closer than 75 mm (3 inches) from a confined edge or 150 mm (6 inches) from a non-confined edge of the course being placed.

B. For compaction of HMA mixtures with quantities less than 100 Mg (104 ton) per day, acceptance may be visual as determined by the Engineer.

C. The Contractor along with their independent testing lab representative shall obtain cores in the presence of the Westfield Public Works Department with a device that shall produce a uniform 150 mm (6 inches) in diameter pavement sample. Each HMA course shall be cored within one workday of placement. Damaged core(s) shall be discarded and replaced with a core from a nearby location as selected by the Engineer.

D. The Contractor, in the presence of the Westfield Public Works Department, shall mark the core to define the course to be tested. If the defined area is less than 1.5 times the maximum particle size, the core will be discarded and a core from a new random location will be selected for testing as determined by the Engineer. Within one work day of coring operations the Contractor shall clean, dry, refill and compact the core holes with suitable material approved by the Engineer.

E. The Contractor's testing lab representative shall take immediate possession of the cores. If the cores are subsequently damaged, additional coring within the specific section(s) will be required at locations to be determined by the Westfield Public Works Department.

F. Each core shall be tested within one work day of coring operation to determine thickness, bulk specific gravity, aggregate gradation and binder content. Test results shall then be transmitted either verbally or by other means to both the Contractor and the Westfield Public Works Department for verification before each subsequent bituminous lift is placed.

1. Average thickness of the cores shall not vary from the plan thickness more than 12.5 mm (0.5 inch) for HMA base and intermediate course(s) and 6.25 mm (0.25 inch) for HMA surface course(s) for acceptance in accordance with INDOTSS section 105.03.

2. The bulk specific gravity shall be determined in accordance with AASHTO T166 or AASHTO T 275. The in place density of a section for a mixture shall be expressed as:

Density % = (BSG/MSG) * 100

Where:
BSG = bulk specific gravity as determined from independent testing laboratory
MSG = maximum specific gravity as reported on job mix formula.

3. The calculated density of the cores shall not be less than 90% nor more than 96% a set out above. Test results which are outside stated limits shall be considered and adjudicated as a failed material in accordance with INDOTSS Section 105.03.

G. The Contractor's independent testing laboratory representative shall determine the aggregate gradation and binder content of the core samples in accordance with ITM 571. Aggregate gradation shall be within tolerances set forth in INDOTSS Section 402.04 and binder content shall be within ±0.5 percent from the job mix formula. Test results which are outside the stated limits shall be considered and adjudicated as a failed material in accordance with INDOTSS Section 105.03.

H. A copy of all core test results shall be submitted to the Engineer for verification of specification compliance within one calendar week of core testing.

I. The Contractor shall make the following tests at their cost and they shall be as specified in this Article and requested by the Engineer. Perform tests in accordance with the following ASTM Specifications:

Test	ASTM Specification
Slump	C143
Air Content	C173
Test Cylinders	C31 or C513
Core Samples	C42
Fly Ash	C311

1. Measure slump each time test beams or cylinders are to be made and at any other time requested by the Westfield Public Works Department. The slump shall be as specified in INDOTSS Section 501.03, or as otherwise specified herein, unless specifically excepted by the Westfield Public Works Department.
2. Measure air content each time test beams or cylinders are to be made and at any other time requested by the Westfield Public Works Department. The field test may be omitted if the air content is known prior to taking samples. The field test may not be omitted if fly ash is used in the mix.

3. Concrete paving mixes shall comply with guidelines of INDOTSS Section 501.04 and shall meet the testing requirements of Section 501.04 (a). However, in lieu of forming test beams as described in Section 501.04 (a) 2, the Contractor may substitute cylinder tests as follows:

a. Make test cylinders in sets of four. Field cure one cylinder and break at seven days. Laboratory cure the remaining three cylinders and break at 28 days. The Contractor shall be responsible for handling and transportation of cylinders.
b. If fly ash is used in the mix, a total set of seven cylinders shall be taken. The additional three cylinders shall be laboratory cured and broken at 56 days, if the 28-day strength does not meet specifications.
c. Make one set of test cylinders for each 100 cubic yards, or fraction of 100 cubic yards, of concrete placed; or at other times requested by the Westfield Public Works Department.
d. Unless otherwise specified, concrete shall have a 28-day compressive strength of 4,000 psi, as demonstrated by laboratory tests of cylinders.

3.12 PROTECTION

A. Maintain compacted aggregate subbase and surface true to line and grade and required density. Maintain subbase until prime coat is placed. Maintain surface until job is complete.

B. Do not permit vehicular traffic of any kind on any bituminous course until the bituminous mixture has hardened sufficiently not to be distorted beyond specified tolerances. Remove any foreign material which is on the surface of any course before the course is rolled or any subsequent course is placed.

C. Do not permit traffic on concrete pavement or walks until concrete has developed sufficient strength not to be marked or damaged. Do not permit vehicular traffic on concrete for at least 14 days.

D. Repair or replace damaged pavement and walks to the satisfaction of the Westfield Public Works Department Director or designee.

3.13 CLEANUP

Clean up the job site following pavement and surfacing restoration. Remove all rubbish, excess materials, temporary structures, and equipment. Leave the work in a neat and presentable condition.

SECTION 02501 - STANDARDS OF ROADWAY GEOMETRIC DESIGN

PART 1 - GENERAL

1.1 Secondary Plats shall conform to the following requirements and standards:

A. Minimum Pavement Width

1. Minimum pavement widths, to be installed at the subdivider's expense, shall be as follows:

a. Primary Arterials: Four (4) lanes at 12 feet, 16 feet center turn lane, plus two (2) feet curb and gutter.
b. Secondary Arterials: Four (4) lanes at 12 feet, or two (2) lanes at 12 feet plus two (2) parking lanes at ten (10) feet, plus two (2) feet curb and gutter.
c. Collector Streets: 36 feet back of curb to back of curb (2 feet curb and gutter).
d. Local Streets: 31 feet back of curb to back of curb (2 feet curb and gutter).
e. Subdivision Streets: Per standard drawings G-1, G-2, G-5 through G-9.
f. The pavement of a turning circle at the end of cul-de-sacs shall have a minimum outside diameter of 76 feet for local cul-de-sacs and 100 feet for all others.
g. Alleys: Per standard drawing G-10.
h. In all commercial areas, the minimum pavement width shall be 36 feet back of curb to back of curb or as approved by variance by the WPWD Engineer.

2. In all industrial areas, the minimum pavement width shall be 24 feet with 8 feet of shoulder on each side of the pavement with "No Parking" on the shoulders.

B. Street Grades, Curves, and Sight Distances

1. The minimum vertical grade for all streets shall be 0.5%.
2. Maximum Vertical Grades

a. The maximum vertical grade for Primary Arterials and Secondary Arterials shall be 5.0%.
b. The maximum vertical grade for Collectors shall be 8%.
c. The maximum vertical grade for Local Roads or Streets shall be 8%.
d. The first 25 feet of an intersecting roadway, from the outer edge of a through roadway, shall be designed with a two percent (2%) downward grade. With a sag vertical curve

situation, the two percent grade shall connect with the remaining street profile grade using a minimum vertical curve length of 50 feet. This sag vertical curve may start at the edge of the through roadway. With a crest vertical curve at the approach to an intersection, the two percent downward grade shall extend 25 feet from the edge of the through roadway and the crest vertical curve can begin at that point. The length of the crest vertical curve shall meet the requirements of the 1990 AASHTO Standards for crest vertical curves.

3. Vertical curves shall be designed to meet or exceed 1990 AASHTO Standards for sag and crest vertical curves as shown in Tables III-40 and III-42.

a. Local Roads or Streets shall have a design speed of 30 mph.
b. Collectors shall have a design speed of 30 mph.
c. Primary Arterials and Secondary Arterials shall have a minimum design speed of 40 mph.

4. Horizontal centerline curve radius shall meet or exceed 1990 AASHTO Standards and shall correspond to the following design speeds:

a. Subdivision Roads shall have a design speed of 30 mph and require a 150 foot minimum centerline radius. Any variances to this standard must be requested in writing and approved by the WPWD Engineer.
b. Local Roads or Streets and Collectors shall have a design speed of 30 mph and require a 300 foot minimum centerline radius.
c. Primary Arterials and Secondary Arterials shall have a design speed of 40 mph and require a 675 foot minimum centerline radius.
d. Tangent distance between reverse curves shall be 100 feet.

5. The maximum length cul-de-sac length shall be 600 feet measured along the centerline from the intersection at the origin to the center of circle. Each cul-de-sac shall have a terminus of circular shape with minimum right-of way diameter of 100 feet for residential use and 120 feet for industrial use. Reference Figure P-12.

C. Intersections

1. At street and alley intersections, property line corners shall be rounded by an arc, the minimum radius of which shall be 20 and

ten (10) feet respectively. In business districts, a chord may be substituted for such arc.
2. Street curb intersections shall be rounded by radii of at least 25 feet. A radius of 40 feet shall be used at the intersection with a Primary Arterial, Secondary Arterial or Collector street.
3. The above minimum radii shall be increased when the angle of street intersection is less than 90 degrees.
4. Intersections of more than two (2) streets at one point will not be allowed.
5. Street jogs with centerline offsets of less than 125 feet shall not be permitted.
6. All streets shall intersect at 90 degrees whenever possible for a minimum distance of 100 feet; however, in no instance shall they intersect at less than 80 degrees onto Primary Arterials, Secondary Arterials, or Collectors; or at less than 70 degrees onto Local Roads or Streets.
7. The following paragraphs shall be required as provisions of restrictive covenants of all Secondary Plats to which they apply:

a. No fence, wall, hedge, tree or shrub planting which obstructs sight lines and elevations between three (3) and nine (9) feet above the street shall be placed or permitted to remain on any corner lot within the triangular area formed by the street right-of-way lines and a line connecting points 40 feet from the intersection of said street lines 40 feet for Collectors and Local Roads and Streets; and 75 feet for Primary Arterials and Secondary Arterials, or in the case of a rounded property corner, from the intersection of the street right-of-way lines extended.
b. The same sight line limitations shall apply to any lot within ten (10) feet of the intersection of a street right-of-way line with the edge of the driveway pavement or alley line. No driveway shall be located within 75 feet of the intersection of two streets.

8. At the intersection of any proposed Subdivision Road or Local Road or Street with a Primary Arterial, Secondary Arterial, or Collector, acceleration and deceleration lanes, passing blisters or left turn lanes shall be provided on the Primary Arterial, Secondary Arterial, or Collector. Reference Figure G-13.

D. Easements

1. Where alleys are not provided, easements for utilities shall be provided. Such easements shall have minimum widths of 20 feet, and where located along lot lines, one-half the width shall be taken from each lot.

2. Where a subdivision is traversed by a watercourse, drainage ditch, channel, or stream, adequate areas for storm water or drainage easements shall be allocated for the purpose of widening, deepening, sloping, improving or protecting said watercourses in accordance with the requirements of the Hamilton County Drainage Board and/or the Westfield Utilities Department.
3. The subdivider shall be encouraged to design for the placement of utility lines underground, following the required standards and specifications established by each utility company. The location of each underground utility system shall be shown by appropriate easement lines on the proposed plat.

E. Obstruction Free Zones

The obstruction free zone is defined as the roadside area next to the travelway which should be free from hazards and obstructions. Obstacles within the obstruction free zone limits should be removed, made breakaway, or shielded with guardrail. The obstruction free zone values given below are minimums and should be extended where accident experience indicates a wider zone would further enhance safety.
The following obstruction free zones apply to roadway projects:

1. Rural and Urban Arterials with Shoulders. Where the design speed is 50 mph or greater and the design ADT is over 1500, the minimum obstruction free zone is 20 ft from the edge of the through traffic lanes or to the right-of-way line, whichever is less. For roadways where the design speed is less than 50 mph, and the design ADT is less than 1500, the minimum obstruction free zone from the edge of through traffic lanes is 10 ft plus the usable shoulder width provided, or to the right-of-way line, whichever is less.

2. Rural and Urban Collectors with Shoulders. Where the design speed is 50 mph or greater and the design ADT is over 1500, the minimum obstruction free zone from the edge of the through traffic lanes is 10 ft plus the usable shoulder width provided, or to the right-of-way line, whichever is less. For Roadways where the design speed is less than 50 mph and design ADT is less than 1500, the minimum obstruction free zone from the edge of through traffic lanes is 6.5 ft, plus the usable shoulder width provided, or to the right-of-way line, whichever is less.

3. Rural and Urban Local Roads and Streets with Shoulders. The minimum obstruction free zone from the edge of the through

traffic lane is 6.5 ft plus the usable shoulder width provided, or to the right-of-way line, whichever is less.

4. Curbed Roadways. Where curbs are 6 in. or higher and the posted speed limit is less than 50 mph, the minimum obstruction free zone from the face of the curb should be 1.6 ft. However, for traffic signal supports the minimum obstruction free zone should be 2.6 ft. Where the curbs are less than 6 in. in height or the posted speed limit is 50 mph or greater regardless of curb height, the minimum obstruction free zone will be the same as defined in Items A, B, or C above.

5. Appurtenance-Free Area. Roadways for all functional classifications should have a 1.6 ft appurtenance-free area from the face of curb or from the edge of the travel lane if there is no curb. For traffic signal supports, a 2.6 ft clearance should be provided. The appurtenance free area is defined as a space in which nothing, including breakaway safety appurtenances, should protrude above the paved or earth surface. The objective is to provide a clear area adjacent to the roadway in which nothing will interfere with extended side-mirrors on trucks, with the opening of vehicular doors, etc.

6. On-Street Parking. The following obstruction-free zone requirements will apply to facilities with on-street parking.

a. Continuous 24-Hour Parking. No obstruction-free zone is required on facilities where there is continuous 24-hour parking, except that the appurtenance-free area as shown in Figure 55-5A should be provided from the face of the curb or edge of the parking lane if there is no curb.
b. Parking Lane Used as a Travel Lane. The obstruction-free zone should be determined assuming the edge of the parking lane as the right edge of the farthest right travel lane.

7. Application

a. The designer should eliminate or modify the following hazards, according to the above treatments, if they are within the obstruction free zone:
b. Tree Removal. Trees that will mature to a diameter of 4 in. or more should be removed from the obstruction free zone, unless shielded by a protective device required for other purposes. Trees on back slopes may generally

remain if they are unlikely to be impacted by errant vehicles.
c. Obstructions. Obstructions within the obstruction free zone, such as rough rock cuts, boulders, headwalls, foundations, etc., with projections that extend more than 4 in. above the ground line should be removed, relocated, made breakaway or shielded with guardrail as appropriate. A rough rock cut is one that presents a potential vehicular snagging problem.
d. Sign and Light Supports. Sign posts and light poles to remain within the obstruction free zone will be made breakaway. In urban areas where pedestrian traffic is prevalent, breakaway light supports should not be used. However, these supports should, as a minimum, be offset beyond the obstruction free zone value as presented in Section 02501 – 1.1 – E or desirably behind the sidewalk. In other areas where pedestrian traffic is prevalent, the use of breakaway supports will be considered on a case-by-case basis by the field review team.
e. Traffic Signals. Traffic signal supports should be placed to provide the obstruction-free zone through the area where the traffic signal supports are located. However, the following exceptions will apply:
f. Channelized Islands. Installation of signal supports in channelizing islands should be avoided, if practical, however, if a signal support must be located in a channelizing island, a minimum clearance of 30 ft should be provided from all travel lanes (including turn lanes) in rural areas and in urban areas where the posted speed is greater than 45 mph. In urban areas where the island is bordered by a barrier curb and the posted speed is 45 mph or less, a minimum clearance of 10 ft should be provided from all travel lanes (including turn lanes).
g. Non-Curbed Facilities (Posted Speeds $\geq$ 50 mph and ADT > 1500). Where conflicts exist such that the placement of the signal supports outside of the obstruction-free zone is impractical (e.g., conflicts with buried or utility cables), the signal supports should be located at least 10 ft beyond the outside edge of the shoulder.
h. Non-Curbed Facilities (Posted Speeds < 50 mph or ADT $\leq$ 1500). Where conflicts exist such that the placement of the signal supports outside of the obstruction-free zone is impractical (e.g., conflicts with buried or utility cables), the signal supports should be

located at least 6.5 ft beyond the outside edge of the shoulder.
i. Culverts. Culvert ends are considered to be within the obstruction free zone if the point at which the top of the culvert protrudes from the slope is within the obstruction free zone. Transverse Slopes on Side Roads and Private Drives. Steep transverse slopes on side roads and private entrances should be considered for flattening, if practical. Desirably these slopes should be 6:1 or flatter, but in no case should they be steeper than 4:1. Transverse slopes on median crossovers will be 10:1 or flatter.
j. Curbs. Curbs should generally be removed on rural highways where posted speeds are greater than 45 mph. The proper placement of traffic control devices must be considered in reviewing the removal of corner island curbs where such devices are located. This item is not intended to cover divisional (channelizing) islands separating two-way traffic or curbs at the edge of shoulder for drainage. In the latter two cases, sloping curbs should be used on highways with posted speeds greater than 45 mph. Curbs higher than 4 in. should not be used in conjunction with guardrail. The face of curbs, used in conjunction with guardrail, should desirably be behind the face of the rail. If this cannot be achieved, the face of the curb may be located flush with the face of the rail.
k. Utility Poles. Utility poles within the obstruction free zone which are not owned by the Town of Westfield or INDOT often constitute a significant hazard and should be removed or relocated. Utility companies should be requested to relocate utility poles that are located in high vulnerability areas such as channelizing islands, or where the accident history indicates there has been a utility pole accident problem. The Development Construction Division, based on their judgment, will determine where such work is warranted.
l. Non-Traversable Hazards. Fill slopes steeper than 1:1 with a height greater than 2 ft within the obstruction-free zone should be flattened to the extent practical. If any part of a drainage ditch appears within the obstruction-free zone, it should be relocated.

PART 2 - PRODUCTS

Not Applicable

SECTION 02502 - STANDARDS OF ROADWAY CONSTRUCTION

PART 1 - GENERAL

1.1 Road construction shall conform to the following requirements and standards:

A. Streets, General

1. Streets and alleys shall be graded, surfaced, and improved to the dimensions required by the cross-sections and the work shall be performed in the manner prescribed in Section 02500 and the Indiana Department of Transportation (INDOT) Standard Specifications.
2. Prior to placing the street and alley surfaces, adequate subsurface drainage (underdrains) for the street shall be provided by the subdivider. Underdrain pipe shall conform to Section 02500 and the INDOT Standard Specifications.
3. Concrete and bituminous asphalt paving mixes shall comply with specifications contained in Section 02500.
4. Before any bond covering a street installation is released, the Westfield Public Works Director or duly authorized representative may request that core borings of the street be provided, at the subdivider's expense, for thickness and/or compaction determination.
5. Prior to the acceptance of asphalt streets, the subdivider shall employ and pay for the services of an independent testing laboratory to take cores at selected locations and perform Marshall stability, flow and density test, and percent of compaction determination on completed asphalt work if so directed by the Westfield Public Works Director or duly authorized representative.
6. Prior to acceptance of concrete streets, subdividers must provide satisfactory test results from an independent testing laboratory to the Westfield Public Works Director or duly authorized representative
7. A developer may request permission from the Westfield Public Works Director to delay the installation of the 1-inch surface layer of asphalt until the binder layer of asphalt has had sufficient time to prove its durability under the stress of heavy construction traffic, but not to exceed one (1) year. The developer shall be required to submit a separate performance bond to cover the cost of the installation of the 1-inch surface layer of asphalt.
8. All traffic control devices shall comply with guidelines and requirements of the current edition of the Indiana Manual on Uniform Traffic Control Devices.

B. Subgrade for Street Pavements

1. Preparation

a. After all earth work is substantially complete and all drains installed, the subgrade shall be brought to the lines and grades shown on the plans.
b. Unless otherwise provided, the upper six (6) inches of all subgrade shall be uniformly compacted to at least 95 percent standard density as determined by the provisions of AASHTO, T99, "Compaction and Density of Soils". During subgrade preparation and after its completion, adequate drainage shall be provided at all times to prevent water from standing on the subgrade. Subgrades shall be so constructed that it will have uniform density throughout. After compaction and final grading, the subgrade shall be finished with a three-wheel roller weighting not less than ten (10) tons. For areas not accessible to the roller, the required compaction shall be obtained by using mechanical tampers.
c. All soft yielding or otherwise unsuitable material which will not compact properly shall be removed. All rock encountered shall either be removed or broken off to conform with required cross sections. Any holes or depressions resulting from the removal of such unsuitable material shall be filled with approved material and compacted to conform with the surrounding subgrade surface. No placement of pavement shall be permitted on uninspected or unapproved subgrade and, at no time, when the subgrade is frozen or muddy. No hauling shall be done nor equipment moved over the subgrade when its condition is such that undue distortion results. If these conditions are present, the subgrade shall be protected with adequate plank runways, mats, or other satisfactory means if hauling is to be done thereon.
d. The subgrade shall be prepared sufficiently in advance to facilitate proper inspection of final elevations and compactions by the Westfield Public Works Director or duly authorized representative.
e. All utility and drainage excavations under pavement shall be backfilled with flowable fill. These locations shall be illustrated on construction drawings submitted to the Westfield Department of Public Works.

2. Rigid Pavement Construction - When concrete is placed, the subgrade shall be properly dampened. Concrete pavement shall be

constructed in accordance with Section 02500 and INDOT Standard Specifications.

C. Pavement Section - Typical pavement sections shall conform to the cross sections shown by Figures P-1 through P-3. The use of alternative cross sections shall be approved by the Westfield Public Works Director.

D. Curbs and Gutters

1. Developers shall provide curbs and gutters on each side of the street in proposed development.
2. Curbs and gutters shall comply with standard details shown by Figure P-8. As an alternate, curb sections which comply with INDOT standard details will be permitted upon approval of the Westfield Department of Public Works.
3. All curb and gutter sections placed on Primary Arterials, Secondary Arterials, or Collectors shall be of the barrier type. Roll-type curb and gutter sections will be permitted for Local Roads and Streets.
4. Curbs and gutters shall be constructed according to Section 02500:

a. The minimum grade of any street gutter shall be not less than three-tenths percent (0.3%).
b. Inlet grates shall be heavy duty type recommended for bicycle traffic. Reference Section 2721.

E. Sidewalks, Pedestrian Paths, Jogging Paths, and Bicycle Paths

1. Sidewalks shall be at least six (6) inches thick at drives and at least four (4) inches thick at all other locations. Sidewalks shall be at least five (5) feet wide adjacent to Primary Arterials, Secondary Arterials, Collectors and in commercial, industrial or multi-family developments. Sidewalks shall be at least five (5) feet wide at all other locations. Sidewalks shall be concrete in accordance with Section 02500. Expansion joints shall be located every 48 feet and control joints every six (6) feet.
2. Curb ramps shall comply with the most current INDOT and ADA requirements.
3. Pedestrian paths, other than sidewalks, shall be constructed to a minimum width of five (5) Feet. The paths shall be constructed of asphalt, crushed stone, bark chips, paving stones, or other similar surface material.
4. Bicycle ways/jogging paths shall be constructed to a minimum width of eight (8) feet with a maximum grade of eight percent (8%). The ways/paths shall be constructed of concrete or asphalt. Concrete ways/paths shall be at least four (4) inches thick and shall

include wire fabric reinforcing of a size "6 x 6 - W2 x W2". Asphalt ways/paths shall be constructed using the following as a minimum requirement:

a. Four (4) inches Compacted Aggregate Size No. 53, stone base
b. Two (2) inches Bituminous Binder No. 8 or 9
c. One (1) inch Bituminous Surface No. 11

5. All ways/paths shall be placed on properly prepared and compacted subgrades. Materials shall be furnished and installed in accordance with Section 02500 and INDOT Standard Specifications.
6. When sidewalks or pathways cross major street intersections within or adjacent to a subdivision, necessary traffic control devices such as painted crosswalks and signs shall be installed at the subdivider's expense at the discretion of the Westfield Town Council or the Westfield Public Works Director or designee.
7. If not located within public rights-of-way, easements of at least ten (10) feet in width shall be provided for sidewalks, pedestrian paths, or bicycle paths.

F. Easements - Whenever possible, easements for poles or underground conduits for electrical power, or telephone lines shall be provided along rear lot lines.

G. Plans - Construction plans for improvements to be installed shall be furnished in accordance with the specifications of the Westfield Department of Public Works and/or, when appropriate, to the Hamilton County Highway Department. Such plans must receive all appropriate approvals before improvements are installed. Upon completion of streets and alleys improvements, as-built plans shall be filed with the Westfield Department of Public Works and when appropriate, to the proper governing body of Hamilton County. All construction plans shall include the following:

1. Horizontal geometry of each proposed street, with centerline and curb radii shown.
2. The profile of each proposed street, with grades indicated, and lengths of vertical curves.
3. The cross-section of each proposed street, showing the width of pavement, the location and width of sidewalks, and the location and size of utility mains.

H. Inspection - Prior to starting any construction, arrangements shall be made for inspection of work to ensure compliance with plans and specifications

CITY OF WESTFIELD SPECIFICATIONS CAN BE FOUND AT: http://www.westfield.in.gov/egov/apps/document/center.egov?view=item;id=50

ELEMENTS
Engineering, LLC
6213 Behner Way
Indianapolis, IN 46250
(317) 490-7054

THE ANDERSON CORPORATION
301 S. UNION STREET
WESTFIELD, IN 46074

NORTHWALK RESIDENTIAL COMMUNITY
740 N. UNION STREET
WESTFIELD, IN 46074

CITY OF WESTFIELD SPECIFICATIONS

JENNIFER L. ROBERTS
REGISTERED
PE19900
STATE OF INDIANA
PROFESSIONAL ENGINEER

APPROVAL PENDING
NOT FOR CONSTRUCTION

DATE:

DWN BY:	CC
CHKD. BY:	JR
SCALE:	N/A
DATE:	4/4/2014

PROJECT NUMBER
13-76-001

DESIGN PHASE
PLAN REVIEW

PLAN NUMBER
C004

approved by the Westfield Department of Public Works or, when appropriate, the Hamilton County Highway Department.

I. All construction must be approved by the Westfield Public Works Director and notice of construction must be given to the Westfield Public Works Director, or duly authorized representative, 48 hours prior to beginning work.

J. Allowable Modifications - Where unusual or exceptional factors or conditions exist, the Westfield Department of Public Works may allow minor modifications of any provision of this Section. When such modifications are allowed, a detailed written statement of the reasons for such modifications shall be attached to all copies of construction plans.

1.2 For pedestrian trails located on the Monon Trail and Midland Trace Trail systems.

A. Definitions

1. Accessible Route – A continuous unobstructed path connecting all accessible elements and spaces of a building or facility. Exterior accessible routes may include parking access aisles, curb ramps, crosswalks at vehicular ways, walks, ramps, an lifts.
2. Outdoor Access Route – A continuous unobstructed path designated for pedestrian use that connects accessible elements within a picnic area, camping area, or designated trailhead.
3. Trail – A route designed, designated, or constructed for recreational pedestrian use or provided as a pedestrian alternative to vehicular routes within a transportation system.
4. Designated Trailhead – A designated point of access that may contain a parking area, information kiosks, restrooms, water hydrants, and may be reached by vehicular or pedestrian access.

B. General

1. Prior to the acceptance of asphalt trails, the subdivider shall employ and pay for the services of an independent testing laboratory to take cores at selected locations and perform Marshall stability, flow and density test, and percent of compaction determination on completed asphalt work if so directed by the Westfield Public Works Director or duly authorized representative.
2. Prior to acceptance of concrete streets, subdividers must provide satisfactory test results from an independent testing laboratory to the Westfield Public Works Director or duly authorized representative

3. All work shall comply with Town Requirements as listed in Section 02500, Parts 1.1, 1.2, and 1.3.

C. Design Speed

1. The minimum design speed for these trails is 20 mph.

D. Trail Slopes

1. Cross Slope = 2% Max.
2. Running Slope
   a. 8.33% slope for 300 feet
   b. 10% Slope for 30 feet
   c. 12% Slope for 10 feet
   d. No more than 30% of the trail length shall exceed 1:12 (8.33% Slope)

E. Resting Intervals

1. Occurrence
   a. At intervals no greater than permitted by running slope
   b. 60" (5 feet) length minimum
   c. less than 1:20 (5%) Slope
   d. As wide as the widest trail segment adjacent to it.

F. Typical Multi-Use Trail Section

1. Asphalt Surface
   a. 110#/SYS HMA, Type A, Surface 9.5mm
   b. 220#/SYS HMA, Type A, Intermediate, 19.0mm
   c. 4" Compacted Aggregate Base, No. 53
   d. Trail Width
   e. 12 feet
2. Shoulders
   a. 4 foot desirable
   b. 2 foot minimum
3. Side Slopes
   a. Cut = 3:1 (2:1 Maximum with Railing)
   b. Fill = 3:1 (2:1 Maximum with Railing)

G. Typical Equestrian Trail Section

1. Stone Surface
   a. 8" Compacted Aggregate Base, No. 53
2. Trail Width

   a. 10 feet
3. Shoulders
   a. Side Slopes
   b. Cut = 3:1
   c. Fill = 3:1

H. Obstruction Free Zone

1. 3 feet Minimum
2. Less requires adequate physical barrier

I. Horizontal Control

1. Minimum Radius = 100 feet

J. Vertical Control

1. Vertical Curve – Minimum Length
2. 60 feet (3 x design speed)

K. K Values: Stopping Sight Distance

1. Crest = 7 (minimum)
2. Sag = 17 (minimum)

L. Signage

1. Roadway
   a. Sign Type W11-2, (500 feet from cross walk)
   b. Sign Type W16-2 with W11-2
   c. Sign Type W11A-2, 500 feet from cross walk
   d. Pavement message marking "XING 100 feet from W11A-2
   e. Pavement message marking "PED" 40 feet from "XING"
   f. Signs W11-2, W11A-2, and W16-2 shall be fluorescent yellow-green, diamond grade.
2. Pathway
   a. "Stop" (R1-1) at 10 feet from edge of street
   b. "No Motor Vehicles" (R5-3) with R1-1
   c. "Cross Traffic Does Not Stop" (W4-4P) with R1-1
   d. "Stop Ahead" (W3-1) 150 feet from "Stop" (R1-1) sign
   e. Warning Signs (i.e., curve ahead) 100 feet from hazard condition

   f. "Pavement Ends" 150 feet from end of trail

M. Road Crossings

1. Type 1
   a. Judgment based on traffic, clear zone, visibility
   b. Rural Local Roads, Urban Local Streets
   c. Trail Warning Signs: "STOP", "STOP AHEAD"
   d. Crosswalk pavement markings at crossing point
2. Type 2
   a. Judgment based on traffic, clear zone, visibility
   b. Rural Arterials, Rural Collectors, Two-Lane Urban Arterials, Urban Collectors
   c. All treatments of Type 1 Road Crossing apply
   d. Overhead Flashing Yellow Warning Signal
3. Type 3
   a. Judgment based on traffic, clear zone, visibility
   b. Multi-Lane Urban Arterials
   c. All treatments of Type 1 and Type 2 Road Crossing apply
   d. Refuge Island

N. Curb Ramps

1. 1:12 Slope
2. Flared sides if traffic must walk across, slope flared at 10:1
3. If ramp has less than 48 inches of walk behind it, flared sides must be 1:12
4. Becomes a standard ramp if more than a 6" vertical change
5. 2 foot flat area at intersections

O. State Highway Crossing

1. Case by case basis
2. MUTCD
3. Acceptable gaps
4. Must be coordinated with INDOT

P. Path in Road Right-of-Way

1. 5 feet separation from edge of path pavement to edge of road
2. Less than 5 feet requires suitable physical barrier
   a. 6" curb with wood railing

   b. Guardrail and wood railing, with no curb or mountable curb (4")
3. Clear Zone Requirements
   a. 18" clear zone minimum for obstructions in ROW
   b. Shy lines for guardrails

Q. Unpaved Road Crossings

1. Pave 10 feet on either side of trail to reduce gravel on trail.

R. Overhead Vertical Clearance

1. 10 feet

S. Edge Protection for Slopes

1. Required where there is less than 5 feet of separation from edge of path to top of slope and the slope is greater than 3:1
2. Drop offs greater than 2 feet and within 5 feet of edge of trail.
3. Location should be at edge of the shoulder.

T. Bollards

1. At road crossings
2. Permanently reflectorized and brightly painted
3. Collapsible
4. Out of roadway clear zone
5. Installed in center of bike path with envelope painted around it.
6. If more than 1, there should be an odd number at a 5 foot spacing.

U. Bridges

1. Clear Width
   a. As wide as the widest approach trail width plus the minimum 2 foot wide clear areas.
   b. Minimum 10 feet.
2. Railing
   a. 54 inches in height
   b. Design loading shall be W=50 pounds per linear foot transversely and vertically, acting simultaneously on each rail.
3. Opening in Horizontal Railing Elements
   a. Lower 27 inches shall not allow a 6" diameter sphere to pass through

   b. Above 27 inches shall not allow a 8" diameter sphere to pass through

4. Approach Railing
   a. 42'-2" in length
   b. Step down in height
5. Decking
   a. Structural concrete slab
   b. Timber decking
   c. Simulated Wood Products. Alternatives must be sent to Public Works and Parks Department for evaluation. These alternatives must also be accompanied by a data sheet, provided by the manufacturer, stating that the product is designed for the proposed use.

V. Overlooks and viewing areas

1. Maneuvering space of
   a. 60" diameter
   b. 1:50 (2% slope) Maximum in any direction
2. Unrestricted viewing area
   a. Accommodates eye level between 32" minimum and 51" maximum

W. Railroads

1. Crossings
   a. Geometry
      - Optimal is 90 degrees to the rail
      - Minimum is 45 degrees to the rail, and may require widened shoulder
   b. Signage
      - Rail warning sign (W10-1) 115 feet from nearest rail
      - Crossbuck (R15-8) 15 feet from the nearest rail
      - If more than one track, R15-2 with R15-1
      - 24" Stop Bar (pavement marking) 15 feet from the nearest rail (with R15-1)
      - Railroad pavement message marking 65 feet from the nearest rail
      - Where existing arms exist (at road crossings) a new pedestrian gate shall be placed if the path must go outside the existing post.

   c. Crossing Materials
      - Optimal material is rubber panel or concrete
      - Asphalt (with formed flangeway) or wood can be used
      - Surface shall be level and flush with the rail top at the outer edge and between the rails except for a maximum 2-1/2" gap on the inner edge of each rail to permit passage of wheel flanges.
2. Corridors
   a. Low Speed / Low Density Rail
      - Recommended Separation: 20 feet or more
      - Minimum separation: 10 feet with fence or other separation technique
   b. Medium Speed / Medium Density
      - Recommended Separation: 25 feet or more
      - Minimum Separation: 15 feet with fence or other separation technique
   c. High Speed / High Density
      - Recommended Separation: 25 feet or more, with fence or other separation technique
      - Minimum Separation: 15 feet with adequate separation technique

X. Hydraulics

1. Culvert Design – Pathway
   a. Type 3 Pipe
   b. Design Storm Frequency
      - Backwater: Q_{100} with trail overflow
      - Serviceability: Q_{10} = 1' below edge of pavement
      - Allowable Velocity: Q_{10}

PART 2 - PRODUCT

Not Applicable

PART 3 - EXECUTION

Not Applicable

SECTION 02503 - STANDARDS OF UTILITY CONSTRUCTION

PART 1 - GENERAL

1.1 MINIMUM STANDARDS FOR SANITARY SEWERS

A. Wherever possible, sanitary sewer systems along streets shall be located on the opposite side of the street from water mains.

B. As the sanitary sewer system is installed, sewer lines shall be marked with a 2" x 4" or other acceptable stake, with a height allowing a minimum of 6'-0" above grade. Stake shall have the uppermost section painted green, and marked with the letters "SS" to indicate sewer line placement.

C. During the placement of new concrete curb, utility marking shall be embossed into the top of the curb. The marking shall be 2-inch high letters and be "SS" for a sanitary sewer lateral and "MH" for a sanitary manhole. The stamp shall be placed into the concrete before the concrete sets up. The letters shall be located perpendicular from the utility feature that is being marked.

D. All Street castings must be black asphalt dipped.

1.2 MINIMUM STANDARDS FOR WATERMAINS

A. Water main supply system for subdivisions and industrial/business parks shall be "looped" to allow for both a primary and secondary water supply to the site.

B. Wherever possible, water main systems along streets shall be located on the opposite side of the street from sanitary sewer lines.

C. Lateral connections should be installed in conjunction with installation of water mains. The water main system shall be designed to wrap around not less than 75% of the outside turning circle of the cul-de-sac.

D. As the water main system is installed, water lines shall be marked with a 2" x 4" or other acceptable stake, with a height allowing a minimum of 6'-0" above grade. Stake shall have the uppermost section painted blue, and marked with the letter "W" to indicate water line placement.

E. After water mains, hydrants, and valves are installed, there shall be a raised pavement marker installed along the center line of the street perpendicular to each hydrant. The raised pavement marker "RPM" shall

be a blue reflector and as specified in the INDOT Specification Standards, Section 808.10. See Figure P-21 and P-22 in Specification Section 02500.

F. During the placement of new concrete curb, utility marking shall be embossed into the top of the curb. The marking shall be 2-inch high letters and be "WM" for a water meter and "V" for a water valve. The stamp shall be placed into the concrete before the concrete sets up. The letters shall be located perpendicular from the utility feature that is being marked.

G. All Street castings must be black asphalt dipped.

1.3 MINIMUM STANDARDS FOR STORM SEWERS

A. As the storm sewer system is installed, storm sewer lines shall be marked with a 2" x 4" or other acceptable stake, with a height allowing a minimum of 6'-0" above grade. Stake shall have the uppermost section painted red, and marked with the letters "D" to indicate subsurface drain line placement.

B. During the placement of new concrete curb, utility marking shall be embossed into the top of the curb. The marking shall be a 2-inch high letter and be a "D" for a subsurface drain. The stamp shall be placed into the concrete before the concrete sets up. The letters shall be located perpendicular to the utility feature that is being marked.

C. All Street castings must be black asphalt dipped.

PART 2 - PRODUCT

Not Applicable

PART 3 - EXECUTION

Not Applicable

END OF SECTION 02503

SECTION 02504 – ADJACENT ROADWAY IMPROVEMENTS

PART 1 - GENERAL

1.1 Roadways adjacent to proposed developments shall conform to the following requirements and standards:

A. Adjacent Roadway Improvements

1. Developers shall be responsible for improvements to the existing roadway(s) that front their property. These improvements shall include, but are not limited to, the following items:
   a. Construction of acceleration lanes, deceleration lanes, and passing blisters for each entrance or street intersection. Reference Figure G-13.
   b. In order to construct adequate passing blisters, right-of-way shall be obtained which has a width consistent with the most current accepted Thoroughfare Plan. A minimum of 500 feet full width right-of-way centered on the entrance or street intersection shall be obtained. Reference Figure G-2 and Figure G-3. The developer is responsible for the purchase of the right-of-way, at fair market value. The Town will offer assistance in obtaining right-of-way if the initial purchase offer is unsuccessful. A written offer to the property owner is required.
   c. The existing two (2)-lane roadway(s) that front the property shall be widened and overlaid in accordance with Figure G-13.
2. Additional improvements may be required depending on field conditions and as determined by the Town Public Works Director or his representative.

PART 2 - PRODUCTS

Not Applicable

PART 3 - EXECUTION

Not Applicable

END OF SECTION 02504

SECTION 02558 - IDENTIFICATION/LOCATION TAPE AND WIRE

PART 1 - GENERAL

1.1 SCOPE

A. Furnish and install identification and warning tape over the centerline of all buried metallic and non-metallic piping. See Figure W-1 for detail.

B. Furnish and install location wire for all buried non-metallic piping. See Figure W-1 for detail.

PART 2 - PRODUCTS

2.1 IDENTIFICATION TAPE

A. Identification/Location Tape

1. Identification/location tape shall be manufactured of inert polyethylene so as to be highly resistant to alkalis, acids and other destructive agents found in soil, and shall have a minimum thickness of four mils. Tape width shall be a minimum of three inches and a maximum of six inches and shall have background color specified below, imprinted with black letters. Imprint shall be as specified below and shall repeat itself a minimum of once every two feet for entire length of tape.
2. Warning tape shall be as described above except no solid foil is required.

B. Tape background colors and imprints shall be as follows:

Imprint	Background Color
"Caution – Water Line Buried Below"	Blue
"Caution – Sanitary Force Main Buried Below"	Green

C. Identification tape shall be as follows:

1. For PVC Water Pipe: Terra Tape Sentry Line or approved equal.
2. For PVC Sanitary Force Main Pipe: Terre Tape Sentry Line or approved equal.

D. Products above are as manufactured by Reef Industries, Inc., Houston, Texas or equivalent manufacture.

2.2 LOCATOR WIRE

Locator wire shall be #10 solid copper wire.

PART 3 - EXECUTION

3.1 INSTALLATION OF IDENTIFICATION TAPE

A. Identification tape shall be installed over all buried piping in accordance with the manufacture's installation instructions and as specified herein.

B. Identification tape shall be installed one foot over centerline of pipe unless otherwise noted on plans.

C. Warning tape shall be installed two feet below final grade over centerline of pipe.

3.2 INSTALLATION OF LOCATOR WIRE FOR NON-METALLIC PIPE

A. For water mains, locator wire shall be installed along the top and taped to the pipe. The wire shall be extended from valves to valves and valve to hydrants. Install the wire in each valve box and extend to cap. When terminating at hydrants, extend wire 6 inches above grade against hydrant.

B. For sanitary force main, locator wire shall be installed along the top and taped to the pipe. Access points for the locator wire shall be placed every 400 feet. Access points shall be 4-inch diameter PVC with threaded metallic caps painted green. Pipe shall be flush with grade. Wire shall be pulled to within 6-inches of the top of the pipe.

C. For open-cut (trench) installations, one locator wire should be used. For trenchless installations (jack and bore or directional drilling) two locator wires should be used.

END OF SECTION 02558

SECTION 02660 - WATER MAINS

PART 1 - GENERAL

1.1 DESCRIPTION

A. Scope: Furnish and install pipe, fittings, valves, hydrants and appurtenances necessary to complete work shown or specified.

B. Codes, specifications and standards referred to by title or number in this specification shall be adhered to, and latest revisions shall apply in all cases.

C. Definitions

1. Abbreviations
   a. ANSI - American National Standards Institute.
   b. ASTM - American Society for Testing & Materials.
   c. AWWA - American Water Works Association.
2. All pipe, fitting and valve sizes and references to pipe diameter on the drawings or in the specifications are intended to be nominal size or diameter and shall be interpreted as such.

1.2 QUALITY ASSURANCE

A. Mark pipe, fittings, valves and hydrants according to the applicable specification or standard. Each length of pipe shall bear the name or trademark of the manufacturer, the location of the plant, and the date of manufacture. Each length shall likewise be marked to designate the class or strength of the pipe. The marking shall be made on the exterior or interior of the pipe barrel near the bell or groove end and shall be plainly visible. Pipe shall have permanently extruded stripes on three (3) or four (4) sides according to the following schedule:

Water Main: Blue Stripes

B. The Contractor shall test and disinfect water mains constructed under this Contract, as specified in this Section.

C. The Town shall collect samples of water from water mains constructed after the piping has been disinfected. The Town will submit the samples to the applicable regulatory agency for bacteriological analysis. Collection and submittal of these samples shall meet the requirements of

the applicable regulatory agency. If samples do not pass the requirements of the bacteriological analysis, the water main will be disinfected and sampled again. This procedure will be followed until the samples pass the analysis.

D. A performance test may be required by the Public Works Director, at any time, for each crew installing water mains. The Contractor shall perform these tests at no additional cost to the Owner. When required by the Public Works Director, the Contractor shall test a given section of water main installed by a given crew. The section shall be a continuous section of water main which can be isolated by valves shown on the drawings. The Contractor shall not install water mains in other sections until the first section has been successfully tested.

PART 2 - PRODUCTS

2.1 GENERAL

All pipe, fittings, valves, hydrants and appurtenances shall be as shown on the drawings or as required by the manufacturer's and ANSI/AWWA specifications. All pipe, fittings, valves, hydrants and appurtenances shall be new and unused.

2.2 BURIED WATER MAIN PIPE AND FITTINGS

A. Ductile Iron Water Mains (3" and Larger)

1. Pipe
   a. Ductile iron pipe shall meet the requirements of ANSI/AWWA C151/A21.51-91. Design and manufacture pipe for the pressure class listed plus 100 psi surge pressure. Additionally, a safety factor of 2.0 and a depth of cover, indicated on the drawings or as required by the manufacturer's and ANSI/AWWA specifications, shall be included. Minimum thickness class shall be as follows:

Size Range	Pressure Class
4" – 12"	350
14" – 20"	250

   b. Pipe joints shall be push-on type. Joints shall meet the requirements of ANSI/AWWA C111/A21.11. Restrained joints shall be Lok-Ring, Lok-Fast, Lok-Tyte, or equal,
2. Fittings

   a. Fittings shall be ductile iron. Fittings for standard size pipe shall meet the requirements of ANSI/AWWA C110/A21.10-93. Compact or short body fittings 3 inches through 16 inches shall meet the requirements of ANSI/AWWA C153/A21.53-94. Design and manufacture fittings for a pressure rating of at least 150 psi.
   b. Fitting joints shall be mechanical joints or restrained push-on joints. Joints shall meet the requirements of ANSI/AWWA C111/A21.11. Thrust block all mechanical joints as indicated on the drawings or as required by the manufacturer's and ANSI/AWWA specifications. Pipe connecting to restrained joint fittings shall be restrained as indicated on the drawings or as required by the manufacturer's and ANSI/AWWA specifications.
3. Adapters
   a. Adapters from ductile iron water mains to flange joint valves or fittings shall be ductile iron. Adapters shall meet the requirements of ANSI/AWWA C110/A21.10-93. Design and manufacture adapters for a pressure class rating of 150 psi.
   b. Adapter ends connecting to ductile iron water mains shall be one of the following: plain end, push-on joint, mechanical joint or restrained push-on joint. Adapters with plain ends, push-on joints or mechanical joints may be used where restrained joints are not required. Adapters shall have restrained push-on joints where restrained joint piping is required, as indicated on the drawings. Mechanical joints and restrained push-on joints shall meet the requirements of ANSI/AWWA C111/A21.11. Restrained joints shall be Lok-Ring, Lok-Fast, Lok-Tyte or as approved by the Public Works Director.
   c. Adapter ends connecting to flange joint valves or fittings shall have joints complying with the specifications for the applicable valves or fittings.
4. Line the inside surfaces of all pipe, fittings and adapters with single layer cement mortar lining. Cement mortar lining and seal coating shall meet the requirements of ANSI/AWWA C104/A21.4-95. Coat the outside surfaces of all pipe, fittings and adapters with a bituminous coating, complying with ANSI/AWWA C151.
5. Gaskets for mechanical joints and push-on joints shall meet the requirements of ANSI/AWWA C111/A21.11.
6. Nuts and Bolts

CITY OF WESTFIELD SPECIFICATIONS CAN BE FOUND AT: http://www.westfield.in.gov/egov/apps/document/center.egov?view=item;id=50

ELEMENTS
Engineering, LLC
6213 Behner Way
Indianapolis, IN 46250
(317) 490-7054

THE ANDERSON CORPORATION
301 S. UNION STREET
WESTFIELD, IN 46074

NORTHWALK RESIDENTIAL COMMUNITY
740 N. UNION STREET
WESTFIELD, IN 46074

CITY OF WESTFIELD SPECIFICATIONS

JENNIFER L. ROBERTS
REGISTERED
STATE OF
INDIANA
PROFESSIONAL ENGINEER

APPROVAL PENDING
NOT FOR
CONSTRUCTION

DATE:

DWN BY:	CC
CHKD. BY:	JR
SCALE:	N/A
DATE:	4/4/2014

PROJECT NUMBER
13-76-001

DESIGN PHASE
PLAN REVIEW

PLAN NUMBER
C005

a. Nuts and bolts for mechanical joints shall be high strength, heat treated, alloy steel. Nuts shall be hexagon nuts, bolts shall be tee head bolts. Nuts and bolts shall meet the requirements of ANSI/AWWA C111/A21.11.
b. Nuts and bolts for restrained push-on joints shall meet the requirements of the joint manufacturer.

7. Polyethylene encasement for ductile iron water mains shall be installed and shall meet the requirements of ANSI/AWWA C105/A21.5. Installation of the polyethylene encasement shall be omitted if written approval is made by the ductile iron pipe manufacturer and/or the Public Works Director. Contractor/Developer shall be required to provide soils testing results for corrosivity at no additional charge to the Town if omission of the polyethylene encasement is proposed.

B. Polyvinyl Chloride Water Mains (3" to 8")

1. Pipe

a. Polyvinyl chloride pipe shall meet the requirements of ANSI/AWWA C900, Class 150/DR18. Design and manufacture pipe for a working pressure of 150 psi plus 100 psi surge pressure. Additionally, a safety factor of 2.0 and a depth of cover, indicated on the drawings or as required by the manufacturer's and ANSI/AWWA specifications, shall be included.
b. Polyvinyl chloride pipe shall have ductile-iron-pipe-equivalent outside diameter.
c. Pipe joints shall be push-on type and meet the requirements of ANSI/AWWA C900. Do not use solvent-cement joints.

2. Fittings

a. Fittings shall be ductile iron and meet the requirements of ANSI/AWWA C110/A21.10. Design and manufacture fittings for a pressure rating of 150 psi.
b. Line the inside surfaces of fittings with cement mortar lining and bituminous seal coating shall meet the requirements of ANSI/AWWA C104/A21.4. Coat outside surfaces of fittings with bituminous coating. Outside coating shall meet the requirements of ANSI/AWWA C110/A21.10.

c. Fitting joints shall be mechanical joints. Mechanical joints shall meet the requirements of ANSI/AWWA C111/A21.11.
d. Mark each fitting. Marking shall meet the requirements of ANSI/AWWA C110/A21.10.

3. Adapters

a. Adapters from polyvinyl chloride water mains to victaulic, flange joint valves or fittings shall be ductile iron. Adapters shall meet the requirements of ANSI/AWWA C110/A21.10. Design and manufacture adapters for a pressure rating of 150 psi.
b. Line the inside surfaces of adapters with a single cement mortar lining. Cement mortar lining and seal coating shall meet the requirements of ANSI/AWWA C104/A21.4. Coat outside surfaces of adapters with bituminous coating, complying with ANSI/AWWA C110/A21.10.
c. Adapter ends connecting to polyvinyl chloride water mains shall have plain ends or mechanical joints. Mechanical joints shall meet the requirements of ANSI/AWWA C111/A21.11.
d. Adapter ends connecting to victaulic, flange joint valves or fittings shall have joints complying with the specifications for the applicable valves or fittings.

4. Gaskets

a. Gaskets for polyvinyl chloride push-on joints shall meet the requirements of ANSI/AWWA C900.
b. Gaskets for mechanical joints shall meet the requirements of ANSI/AWWA C111/A21.11 and ASTM F477.

5. Nuts and bolts for mechanical joints shall be high strength, heat treated, alloy steel. Nuts shall be hexagon nuts, and bolts shall be tee head bolts. Nuts and bolts shall meet the requirements of ANSI/AWWA C111/A21.11.

C. High-density polyethylene (HDPE) for Water Mains (3" or larger)

1. Pipes: Polyethylene piping and fittings shall be made of a high density polyethylene pipe compound with extra high molecular weight that meets the requirements for Type III, Grade P345 Polyethylene Material as defined in ASTM D-1248 (PE 3408). The minimum pressure class/SDR rating acceptable shall be Class 160/SDR 11. The pipe shall be DIPS and shall have an interior diameter no less than the

piping that it is connected to.

2. Joints: Joints shall be of a heat fusion joining system. Pipe and fittings shall be thermal butt fusion, saddle fusion, or socket fusion in accordance with manufacturer recommended procedures and ASTM D-2161. At the point of fusion, the outside diameter and minimum wall thickness of the fitting shall match the outside diameter and minimum wall thickness specifications of ASTM D-1248 for the same size pipe.

Joining of the pipes and fittings shall be performed in accordance with ASTM D-2774. Depending upon the installation requirements and site location, joining shall be performed within or outside the excavation. Joints of the pipe sections shall be smooth on the inside and internal projection beads shall not be greater than 3/16 inch.

The tensile strength at yield of the butt-fusion joints shall not be less than the pipe. A specimen of the pipe cut across the butt-fusion joints shall be tested in accordance with ASTM D-638

The manufacturer shall provide fusion training. The contractor and the onsite joint inspector shall be trained by the manufacturer or manufacturer's authorized representative.

The fusion equipment and operator shall be required to demonstrate successful field experience. Regarding fusion over 36" capability, the fusion unit shall be field tested for a period of five years and the fusion operator shall have pipe size experience of the same size pipe on this project for five years or longer.

3. Fittings: All fitting shall be provided as indicated on the plans. HDPE Fittings shall be of the same material and class as the pipe and shall be manufactured by the manufacturer of the pipe. HDPE Elbows, tees, and wyes shall be manufactured by mitered fabrication. The manufacturer shall have a written specification for all standard mitered fittings, which establishes Quality Control criteria and tolerances. The manufacturer may be required to demonstrate its ability to produce product required by this specification.

Mechanical joint anchor fittings (MJ Adapter or Harvey Adapter) shall be used to transition from ductile iron to HDPE and from HDPE to PVC. The fitting shall be stronger than the pipe in that when it is subjected to tensile stress the pipe will pull apart before the fitting will pull out and the pipe will blow before the fitting will rupture under pressure.

All pressure rated fittings shall be rated according to the manufacturer's written specifications, and clearly labeled on the fittings as such.

2.3 PIPE AND FITTINGS SMALLER THAN 3-INCH

A. Pipe shall be Type K drawn copper and shall meet the requirements of ASTM B88. Cooper pipe must be used for all piping to the meter pit.

B. Fittings and couplings shall be cast bronze and shall meet the requirements of ASTM B16.18. Construct and manufacture fittings and couplings for a pressure rating of 150 psi.

C. Unions shall be bronze and shall meet the requirements of ASTM B16.18. Design and manufacture unions for a pressure rating of 150 psi.

D. Flanges for connection of screwed joint pipe to flange joint valves or fittings shall be 125-16 cast iron, screwed companion flanges, complying with both ASTM A126 and ANSI B16.1.

E. Tape for screwed joints shall be teflon.

F. Gaskets for flange joints shall be 1/16-inch thick, full face and conform to ANSI/AWWA C111/A21.11. Gaskets shall be rubber or as approved by the Public Works Director.

G. Bolts for flange joints shall be steel, heavy hexagon head machine bolts. Nuts shall be steel, semi-finished, heavy hexagon nuts. Nuts and bolts shall meet the requirements of ASTM A307 for Grade B and be zinc-coated alloy steel.

2.4 VALVES

A. Butterfly Valves

1. Butterfly valves and operators shall meet the requirements of AWWA Standard C504. Valves and operators shall be Class 150B.
2. Buried butterfly valves shall have mechanical joints. Mechanical joints shall meet the requirements of AWWA C111. Butterfly valves installed above ground or in structures shall have flange joints as specified in AWWA Standard C504. Nuts, bolts, and gaskets for flange joints shall meet the requirements of ANSI/AWWA C110/A21.10. Nuts and bolts shall be cadmium plated. Gaskets shall be full face and shall be red rubber, or equal.

3. Each buried butterfly valve shall have a manual operator and a 2-inch operating nut. Valve opening direction shall be consistent with operation of existing valves in the waterworks in which the valves are installed, unless otherwise directed by the Engineer.
4. Each butterfly valve installed above ground or in a structure shall have a manual operator and handwheel.

B. Gate Valves

1. Buried gate valves 4-inches and larger shall be full ductile iron body, epoxy fusion bonded inside and out, non-rising stem gate valves. Valves shall meet the requirements of ANSI/AWWA C500 or C509 and have mechanical joint ends. Mechanical joints and joint accessories shall comply with ANSI/AWWA C111/A21.11. Valve opening direction shall be consistent with operation of existing valves in the waterworks where the valves are installed, unless otherwise directed by the Public Works Director.
2. Three-inch buried gate valves shall be full ductile iron body, epoxy fusion bonded inside and out, non-rising stem gate valves. Valves shall meet the requirements of ANSI/AWWA C500 or C509; except, ends shall be screwed. Screwed ends shall conform to ANSI B16.3. Valve opening direction shall be consistent with operation of existing valves in the waterworks where the valves are installed, unless otherwise directed by the Public Works Director.
3. Gate valves 4-inches and larger installed above ground or in structures shall be full ductile iron body, epoxy fusion bonded inside and out, outside screw and yoke gate valves. Valves shall correspond to ANSI/AWWA C500 or C509. Outside screw and yoke gate valves shall have flange joint ends and malleable iron handwheels. Flange joints and accessories shall be as specified in ANSI/AWWA C110/A21.10. Nuts and bolts shall be zinc-coated alloy steel. Gaskets shall be full face and rubber, or as approved by the Public Works Director.
4. Gate valves smaller than 4-inch installed above ground or in structures shall be bronze, 125 lb. S.W.P. double disc, screwed-in bonnet, rising stem, inside screw gate valves with screwed ends and malleable iron handwheels. Valves shall meet the requirements of federal specifications WASTEWATER-V-54d for Class A, Type III Valves.

C. Buried valves 2-inch and smaller shall be curb stops. Curb stops shall meet the applicable requirements of ANSI/AWWA C800, ASTM B-62 for 85-5-5-5 composition bronze, and USAS B2.1. Curb stops shall be Mueller H-10283, Ford B11 Series, or as approved by the Public Works Director.

D. Tapping Valves

1. Tapping valves shall comply with both ANSI/AWWA C500 or C509 and have flange mechanical joint ends. Double disc gate valve gates, gate rings and body-seat rings shall be oversized to permit entry and exit of tapping machine cutters.
2. Valve end connecting to tapping sleeve shall have a flange for bolting to the sleeve. The flange shall have a tongue which fits a recess in the sleeve. Tongues shall meet the requirements of MSS SP-60. Resilient seated gate valves having a port diameter equal to or exceeding 1/4 inch over nominal diameter shall not require a tongue. Flange dimensions and drilling shall meet the requirements of ANSI B16.1. Nuts, bolts, and gaskets for flange joints shall meet the requirements of ANSI/AWWA C110/A21.10-93. Nuts and bolts shall be zinc-coated alloy steel, and gaskets shall be rubber, or as approved by the Public Works Director. Mechanical joints and accessories shall meet the requirements of ANSI/AWWA C111/A21.11. A full nominal diameter cutter shall be used for tapping.
Tapping valves 14-inch and smaller shall be installed vertically. Tapping valves 16-inch and larger shall be installed horizontally and shall have bypass valves. Tapping valves installed horizontally shall have rollers and tracks. Valves 16-inch and larger shall have gear operators with enclosed gear cases suitable for buried service. Gear cases shall be extended type or totally enclosed type. Extended type gear cases shall have bolted side plates to cover stem and stuffing box.

E. Air and Vacuum Valves: Air and vacuum valves shall be as follows:

Size	Specification
½"	Apco No. 141WD, Val-Matic 100DWS, or equal
1"	Apco No. 142WD, Val-Matic 101DWS, or equal
2"	Apco No. 144WD, Val-Matic 102DWS, or equal
3"	Apco No. 146WD, Val-Matic 103DWS, or equal
4"	Apco No. 1604/152, Val-Matic 104DWS, or equal
6"	Apco No. 1606/153, Val-Matic 106DWS, or equal

2.5 VALVE BOXES

A. Valve boxes for butterfly valves and gate valves shall be cast iron. Valve boxes shall be two piece or three piece type. Each two piece box shall be complete with bottom section, top section and cover. Each three piece box shall be complete with base, center section, top section and cover. Valve boxes shall be extension type with slide or screw type adjustment.

Each base and bottom section shall be the proper size for the valve served. Each valve box assembly shall be the proper length for the valve served. The minimum thickness of metal shall be 3/16-inch. Cast the word "WATER" in each valve box cover.

2.6 FIRE HYDRANTS

A. Fire hydrants shall be dry-barrel, compression shutoff, traffic model and comply with AWWA C502. Main valve size shall be 5-1/4 inch. Inlets shall be 6-inch mechanical joint. Each hydrant shall have two 2-1/2-inch nozzles and one 5-inch Storz pumper nozzle. Nozzle threads and hydrant opening direction shall be consistent with existing fire hydrants in the waterworks in which the fire hydrants are installed, unless otherwise directed by the Public Works Director. Each hydrant shall be the proper length for the water main to which the hydrant is connected. Fire hydrant coating shall meet the requirements of AWWA C502. Fire hydrants shall be MAB Fire Protection Red (7068), within the Westfield Washington Fire Department jurisdiction or MAB Caution Yellow (7077), within the Noblesville Fire Department jurisdiction. Hydrants shall be Model No. A423, as manufactured by Mueller Company.

B. Fire Hydrant Placement – Fire Hydrants shall be placed no farther apart than 300 feet in all residential subdivisions, subdivision sections, and other residential areas in which dwelling density meets or exceeds three dwelling units per gross acre. Fire hydrants shall be placed no further apart than 300 feet in all Industrial, Business, and Commercial areas, and all Industrial, Business, and Commercial uses. Such requirement shall be in full force and effect unless explicitly exempted by the Chief of the local fire department. For residential uses with densities less than three dwelling units per gross acre, the requirements as established in Table No. III-B-A of the Uniform Fire Code shall apply. Where there is any ambiguity or dispute concerning the interpretation of this requirement, the decision of the Chief of the local fire department shall prevail subject to appeal.

2.7 SPRINKLER SYSTEMS

Multi-family developments, duplexes, and hotels/motels shall be required to have sprinkler systems installed in the attics of said structure as approved by the Chief of the local fire department. Such requirement shall be in full force and effect unless explicitly exempted by the Chief of the local fire department. Where there is any ambiguity or dispute concerning the interpretation of this requirement, the decision of the Chief of the local fire department shall prevail subject to approval.

2.8 TAPPING SLEEVES

A. Tapping sleeves shall be stainless steel split sleeves. Each sleeve shall have a branch connection with a flange end. The inside diameter of each branch shall be over-sized to permit entry and exit of tapping machine cutters. Each flange shall have a recess to center a tapping valve. Recesses shall meet the requirements of MSS SP-60. Flange dimensions and drilling shall meet the requirements of ANSI B16.1. The sleeve dimensions shall be such that the sleeves will not leak when installed on cast iron, ductile iron, or polyvinyl chloride pipe with outside diameters shown in ANSI/AWWA Standards.

B. Tapping sleeves for 4-inch through 16-inch pipe shall be mechanical joint type. Design and manufacture tapping sleeves for a working pressure of 200 psi.

C. Tapping sleeves for 18-inch and larger pipe shall be mechanical joint type. Design and manufacture tapping sleeves for a working pressure of 150 psi.

2.9 TAPPING SADDLES

A. Design and manufacture tapping saddles for a working pressure of 200 psi. Saddle bodies shall be stainless steel. Saddle straps shall be corrosion resistant steel alloy. Saddle gaskets shall be positively confined O-ring gasket. The sleeve dimensions shall be such that the sleeves will not leak when installed on cast iron, ductile iron, or polyvinyl chloride pipe with outside diameter shown in ANSI/AWWA Standards.

B. Each saddle used for making a wet connection shall have a branch connection with a flange end. The inside diameter of each branch shall be oversized to permit entry and exist of tapping machine cutters. Each flange shall have a recess to center a tapping valve. Recesses shall meet the requirements of MSS SP-60. Flange dimensions and drilling shall meet the requirements of ANSI B16.1.

C. Each saddle used for making a dry connection shall have a branch connection with a flange or mechanical joint end. Flange dimensions and drilling shall meet the requirements of ANSI B16.1. Nuts and bolts for flange joints shall meet the requirements of ANSI/AWWA C110/A21.10 and be zinc-coated alloy steel. Gaskets shall comply with ANSI/AWWA C110/A21.10, be full face and rubber, or as approved by the Public Works Director. Mechanical joints and accessories shall meet the requirements of ANSI/AWWA C111/A21.11.

D. Gaskets used to seal joints between saddle bodies and tapped pipes shall be O-ring type, circular in cross section, and made of natural or synthetic rubber with a Durometer Hardness of 70 ± 5.

2.10 FLANGE-MECHANICAL JOINT ADAPTERS

Flange-mechanical joint adapters shall be Dresser Style 127, Smith-Blair Type 912 or as approved by the Public Works Director.

2.11 AIR AND VACUUM VALVE CHAMBERS

A. Air and vacuum valve chambers shall be 4-foot diameter precast concrete manhole barrels with precast concrete flat slab tops. Precast manhole barrels shall meet the requirements of ASTM C478.

B. Air and vacuum valve chamber access frames and cover shall be Neenah R-1915-G, or equal. Cast the word "WATER" in each cover.

2.12 WATER SERVICES

A. Pipe shall be seamless copper tubing and shall meet the requirements of ASTM B88, Type "K."

B. Fittings and Couplings: Couplings for copper tubing shall be copper to copper or copper to iron, as required, and shall meet the applicable requirements of AWWA C800, ASTM B-62 for 85-5-5-5 composition bronze, and ANSI B2.1. Fittings and couplings shall be Ford Products, Pack Type Compression Joints, or equal.

C. Service connections made to a PVC water main shall be made using a stainless steel saddle with a corporation stop.

PART 3 - EXECUTION

3.1 INSPECTION

Inspect water main pipe, fittings, valves, hydrants, and appurtenances prior to installation. Promptly remove damaged or unsuitable products from the job site. Replace damaged or unsuitable products with undamaged and suitable products.

3.2 LAYING OF WATER MAINS

A. Proper tools and facilities shall be provided and used by the Contractor for safe working conditions.

B. Lay and maintain pipe to the lines and grades shown on the drawings or to the minimum depth specified in this Article. Install fittings, valves and hydrants in the locations shown on the drawings.

C. When the exact location of buried utilities is unknown and piping is to be constructed parallel and close to said utilities, adjust the alignment of the piping to least interfere with these utilities. This applies unless otherwise shown on the drawings or specified by the Public Works Director.

D. All crossings of water mains and sanitary sewers or storm sewers must be in accordance with 327 IAC 8-3.2-9. Water mains shall be laid at least 10 feet horizontally from any existing sanitary sewer, sewage force main, or storm sewer. The distance shall be measured from outside edge of water main to outside edge of the sanitary sewer or storm sewer. Water mains crossing sanitary sewer, sewage force mains, or storm sewer shall be laid to provide a minimum vertical distance of 18 inches between the outside of the water main and the outside of the sanitary sewer, force main, or storm sewer. The 18-inch separation shall apply whether the water main is over or under the sewer or force main. Lay water mains at crossings of sewers and force mains so a full length of water main pipe is centered on the sewer or force main whenever possible.

E. No watermains shall be within eight (8) feet of a sanitary sewer manhole, a storm sewer manhole, or a drainage grate support structure as measured from the outside edge of the water main to the outside edge of the sanitary sewer manhole, storm sewer manhole, or drainage grate support structure, per 327 IAC 8-3.2-9.e.

F. All piping shall be laid at a depth that provides at least 4'-6" of cover. Cover shall be measured as the vertical distance from the top of the pipe to the finish grade elevation.

G. Laying of water mains shall meet the requirements of ANSI/AWWA C600, unless otherwise specified in this Section.

H. Shape the bottom of the trench to give uniform circumferential support of the lower quarter of each pipe.

I. Do not lay pipe in water or when the trench or weather conditions are unsuitable for proper installation.

J. As each length of pipe is placed in a trench, joint the pipe being laid to the previously laid pipe. Bring the pipe to correct line and grade. Secure the pipe in place with bedding tamped under the pipe. Tamp bedding up to the centerline of the pipe.

K. Deflection from a straight line or grade shall not exceed the limits specified in this Section. If the alignment requires joint deflections in excess of the allowable deflection per joint, furnish and install fittings or a sufficient number of shorter lengths of pipe.

L. Provide thrust restraint at horizontal and vertical deflection fittings and at tees, plugs, tapping sleeves and tapping saddles. Restraint shall be concrete thrust blocking or restrained joint piping.

M. Where concrete thrust blocking is used, cover the fitting to be blocked with visqueen or a heavy duty grease to prevent adherence of the concrete to the fitting.

N. Block the open end of the pipe at the close of each day's work to prevent contamination from dirt or rain water and entry of any animal or foreign material.

O. Lower pipe, fittings, valves and hydrants into the trench by hand, hoists or ropes or other suitable tools or equipment that will not damage products, coatings or linings. Do not drop or dump pipe, fittings, valves, or hydrants into the trench.

P. Water main designs that require crossing a county legal drain shall be approved and constructed per the latest standards of the Hamilton County Surveyor's Office.

3.3 SETTING VALVES, VALVE BOXES AND FIRE HYDRANTS

A. Clean the interiors of valves and hydrants of foreign matter before installation. Tighten stuffing boxes. Inspect valves and hydrants in opened and closed positions to ensure all parts are in working condition.

B. Set valves and valve boxes plumb. Center valve boxes on the valves or valve operators. Locate valves outside the area of roads and streets where feasible. Tamp backfill around each valve box to a distance of 4 feet on all sides of the box or to the undisturbed trench face if less than 4 feet.

C. Set hydrants plumb with the pumper nozzle facing the street. The centerline of the outlet nozzles shall be at least 18 inches or at most 30 inches above finished grade at a hydrant. Install hydrant extensions where required to bring hydrant to proper elevation. Set each hydrant upon a slab of stone or concrete not less than 4 inches thick and 15 inches square. Wedge the side of each hydrant opposite the pipe connection against the undisturbed trench face to prevent the hydrant from blowing off the branch connection. Compact the backfill around each hydrant to finish grade. Furnish and install a gate valve and valve box in each hydrant branch connection. In the field, (Westfield) apply two coats of MAB Fire Protection Red (7068), (Noblesville) MAB Caution Yellow (7077) to the fire hydrants installed. All installed hydrants meeting the requirement of Section 2660; Para. 2.6 (a), shall be painted by the contractor either MAB

Fire Protection Red (7068), within the Westfield Washington Fire Department jurisdiction or MAB Caution Yellow (7077), within the Noblesville Fire Department jurisdiction. A three (3) foot clear space shall be maintained around the circumference of fire hydrants except as otherwise required or approved.

D. All inline water valve box caps should be painted blue. All hydrant valve caps should be painted MAB Fire Protection Red (7068).

3.4 CONNECTING TO EXISTING MAINS

A. The Contractor shall locate and verify exact size of all existing mains, both horizontally and vertically. Additionally, allow adequate time, after location and prior to making new connections, for changes in the connection location and size. Backfill excavation immediately after main is located and measured.

B. Make each wet connection with a tapping valve and tapping sleeve. Install and hydrostatically test each tapping valve and tapping sleeve assembly prior to tapping existing water main. Inspect each tapping valve prior to tapping existing water main. Open and close tapping valves, and inspect tapping valves in opened and closed positions to ensure all parts are in working condition. Inspect each tapping valve immediately before connecting tapping machine to ensure the tapping valve is open. Install watertight plug on the tapping valve outlet and backfill excavation if existing water main is not tapped within 48 hours after installing tapping valve and tapping sleeve or tapping saddle assembly. Install watertight plug on the tapping valve outlet and backfill excavation if new water main is not connected to tapping valve within 48 hours after making tap in existing water main.

C. Make each dry connection with fittings and valves indicated on the drawings. Furnish and install sleeves required to complete connections. All required pipe, fittings, valves, tools, and equipment shall be at the connection site prior to starting connection. Wash interior of new pipe, fittings, and valves with a solution containing 50 mg/1 of chlorine prior to making connection. Make connections at night and on weekends when required. The Owner will operate existing valves. Install sufficient water main and restrain joints so existing water mains can be up in service immediately after connection is completed. Inspect joints and eliminate leaks immediately after connection is completed and existing mains are put in service. Install watertight plugs on open ends of pipe and valves, and backfill excavation if new water main is not connected to dry connection within 48 hours after completing dry connection.

3.5 JOINTING

A. Ductile Iron Push-on Joints

1. Pipe must be cleaned and installed as specified by the manufacturer and ANSI/AWWA C600 requirements. Additionally, all lumps, blisters, excess bituminous coating and foreign material must be removed from the bell and spigot end of each pipe.
2. For restrained push-on joints, move the loose retainer ring into position against the retainer bar on the spigot end of the pipe being installed. Loosely assemble the joint bolts and nuts.
3. Deflect pipe after jointing, if deflection is required. The amount of deflection shall not exceed the limits shown in the following table:

Pipe Size	Maximum Deflection Angle	Maximum Deflection Based Upon 18-Foot Pipe Length
4"	5°	18-1/2"
6"	5°	18-1/2"
8"	5°	18-1/2"
10"	5°	18-1/2"
12"	5°	18-1/2"

4. For restrained push-on joints, pull the nuts to a uniform tightness by hand or with a short wrench. Do not pull the spigot of the pipe being installed against the back of the bell of the receiving pipe. Engage at least a full nut on each bolt when joint deflection is required.

B. Polyvinyl Chloride Push-on Joints

1. Pipe must be cleaned and installed as specified by the manufacturer's requirements. Additionally, all joints must be free of all foreign material.
2. Deflect the pipe after jointing, if deflection is required. The amount of deflection shall not exceed the limits recommended by the pipe.

C. Mechanical Joints

1. Pipe must be cleaned and installed as specified by the manufacturer and AWWA C600 requirements. Additionally, all

lumps, blisters, excess bituminous coating and foreign material must be removed from the bell and spigot end of each pipe.
2. Evenly tighten the nuts using a torque wrench. The torque shall be within the range listed in the following table:

Pipe Size	Bolt Size	Torque Range
4" thru 24"	3/4"	75 to 90 ft.-lb.

3. Deflect pipe, fittings or valves after jointing, if deflection is required. The amount of deflection shall not exceed the limits shown in the following table:

Pipe Size	Maximum Deflection Angle	Maximum Deflection Based Upon 18-Foot Pipe Length
4"	8° - 18'	31"
6"	7° - 7'	27"
8"	5° - 21'	20"
10"	5° - 21'	20"
12"	5° - 21'	20"
14"	3° - 35'	13-1/2"
16"	3° - 35'	13-1/2"
18"	3° - 0'	11"
20"	3° - 0'	11"
24"	2° - 23'	9"

D. Shouldered Type Joints

1. Pipe must be cleaned and installed as specified by the manufacturer and AWWA C600 requirements. Additionally, all lumps, blisters, excess bituminous coating and foreign material must be removed from the bell and spigot end of each pipe.
2. The tightening torque shall not exceed the limits recommended by the joint manufacturer.
3. Deflect pipe, fittings, adapters or valves after jointing, if deflection is required. The amount of deflection shall not exceed the limits recommended by the joint manufacturer.

E. Threaded Joints

1. Pipe must be cleaned and installed as specified by the manufacturer and AWWA C600 requirements. Additionally, all lumps, blisters, excess bituminous coating and foreign material must be removed from the bell and spigot end of each pipe.

2. Do not overtighten joints.
3. Backing off made-up threaded joints to facilitate fit-up or alignment will not be permitted

F. Flange Joints

1. Pipe must be cleaned and installed as specified by the manufacturer and AWWA C600 requirements. Additionally, all lumps, blisters, excess bituminous coating and foreign material must be removed from the bell and spigot end of each pipe.
2. Do not overtorque nuts and bolts.

3.6 RESTRAINING AND SUPPORTS

A. Thrust Blocking

1. Construct thrust blocks of concrete having a 28-day compressive strength of at least 2,000 psi.
2. Lubricate fitting surfaces to prevent bonding between fittings and thrust blocks.
3. Construct thrust blocks between fittings and undisturbed soil. The area of thrust blocking bearing on undisturbed soil shall be at least the area indicated on the drawings. Construct thrust blocking so pipe and joints are accessible for repair and joint flexibility is not impaired.

B. Restrained joint piping shall be as specified in this Section. Distance from fitting to end of restraint shall not be less than that indicated on the drawings.

C. Mechanical Joint Rod Restraint

1. Mechanical joint rod restraint shall be from fitting to fitting.
2. The number of rods shall conform to the following table:

Pipe Size	Rod Size	Minimum No. of Rods
4"	3/4"	2
6"	3/4"	2
8"	3/4"	4
10"	3/4"	4
12"	3/4"	6
14"	3/4"	6
16"	3/4"	8

CITY OF WESTFIELD SPECIFICATIONS CAN BE FOUND AT: http://www.westfield.in.gov/egov/apps/document/center.egov?view=item;id=50

ELEMENTS
Engineering, LLC
6213 Behner Way
Indianapolis, IN 46250
(317) 490-7054

THE ANDERSON CORPORATION
301 S. UNION STREET
WESTFIELD, IN 46074

NORTHWALK RESIDENTIAL COMMUNITY
740 N. UNION STREET
WESTFIELD, IN 46074

CITY OF WESTFIELD SPECIFICATIONS

JENNIFER L. ROBERTS REGISTERED PE19900155 STATE OF INDIANA PROFESSIONAL ENGINEER
APPROVAL PENDING NOT FOR CONSTRUCTION

DATE:

DWN BY:	CC
CHKD. BY:	JR
SCALE:	N/A
DATE:	4/4/2014

PROJECT NUMBER
13-76-001

DESIGN PHASE
PLAN REVIEW

PLAN NUMBER
C006

18"	3/4"	8
20"	3/4"	10
24"	3/4"	16

D. Pipe Supports

1. Furnish and install supports required to hold pipe, fittings and valves at the lines and grades indicated on the drawings, without causing strain upon pipe, fittings and valves.
2. Support piping by suitable saddle stands, concrete piers or hangers.
3. Locate supports where necessary, at least 8 feet on center.

3.7 AIR AND VACUUM VALVE CHAMBERS

A. Install air and vacuum valve chambers as indicated on the drawings.

B. Mortar for joints and plastering shall consist of one part Portland Cement and two parts fine sand. Lime may be added to the mortar used for brick work. Add lime in an amount of not more than 20% of the volume of cement. Complete fill joints between precast chamber sections. Joints shall be smooth and free from surplus mortar on the inside surface of the chamber. Plaster brick at the top of chambers with 1/2-inch of mortar.

C. Set frames and covers so the top of the cover will be flush with finished grade.

D. Vent air and vacuum valve outlets to the surface. Terminate vent outlets 3 feet above finished grade. Screen vents to prevent the entrance of insects. Paint air and vacuum valve vents yellow.

3.8 HYDROSTATIC TEST

A. Hydrostatic tests shall be performed on all water mains installed. The Contractor shall make arrangements with the Town Engineer and/or Town Representative for scheduling each test. Each test shall be performed on the day mutually agreed upon and in the presence of the Town Engineer and/or Town Representative.
B. The Contractor shall furnish equipment, temporary piping, pumps, fittings, gauges, and operating personnel necessary to conduct the tests. Water for testing may be obtained from the Owner.

C. The water mains may be tested in sections between valves when there is one or more intermediary valves in a water main.

D. Test procedures shall meet the requirements of AWWA Standard C600.

E. Each section of water main shall be complete, and thrust blocks shall have been in place for not less than 10 days prior to being tested.

F. Expel all air from the water main test section during the filling of the main and prior to the application of test pressure. Tap the water main at high points, if necessary, to release all air from the water main. Plug taps after the test is successfully completed. Plugs shall be watertight.

G. Test water mains at a static pressure of 150 pounds per square inch over a period of two consecutive hours. The test will be considered successful when the pressure drop over the test period is 5 pounds per square inch or less. If the pressure drop exceeds 5 pounds per square inch, repair leaks and repeat the test until the pressure drop over the test period is 5 pounds per square inch or less.

3.9 FLUSHING

A. Flush water mains and fire hydrants prior to disinfection. Flush water mains with a flushing velocity of at least 2.5 feet per second. Following are flows required to provide a flushing velocity of 2.5 feet per second:

Pipe Size	Inside Diameter	Flow at a Velocity of 2.5 Feet per Second
½"	0.622"	2.4 gpm
¾"	0.824"	4.2 gpm
1"	1.05"	6.8 gpm
1¼"	1.38"	12 gpm
1½"	1.61"	16 gpm
2"	2.07"	27 gpm
2½"	2.47"	38 gpm
3"	3.07"	58 gpm
4"	4"	98 gpm
6"	6"	220 gpm
8"	8"	390 gpm
10"	10"	620 gpm
12"	12"	880 gpm
14"	14"	1,200 gpm
16"	16"	1,600 gpm
18"	18"	2,000 gpm
20"	20"	2,500 gpm
24"	24"	3,600 gpm

B. Flush water mains and hydrants until the water discharged is clear.

3.10 DISINFECTION

A. Disinfect all new and repaired water mains prior to placing them in service. Disinfect pipe, fittings, valves and hydrants with a chlorine solution containing 50 mg/l ± 5 mg/l of available chlorine.

B. The chlorinating material shall be calcium hypochlorite . Calcium hypochlorite shall have 70% available chlorine by weight, and sodium hypochlorite shall have 5.25% to 14.7% available chlorine. Placing chlorine tablets in the mains during construction is not an acceptable method of disinfection. The following table shows the quantity of hypochlorite required to produce 50 mg/l of available chlorine per 100 feet of pipe.

Pipe Size	Inside Diameter	Chlorine Gas	Pounds Cal. Hycl. (70%)	Ounces Cal. Hycl. (70%)
½"	0.622"	0.00066	0.0094	0.015
¾"	0.824"	0.0012	0.0017	0.026
1"	1.05"	0.0019	0.0027	0.043
1 ¼"	1.38"	0.0032	0.0046	0.074
1 ½"	1.61"	0.0044	0.0063	0.10
2"	2.07"	0.0073	0.010	0.17
2 ½"	2.47"	0.010	0.015	0.24
3"	3.07"	0.016	0.023	0.37
4"	4"	0.027	0.039	0.62
6"	6"	0.061	0.087	1.4
8"	8"	0.11	0.16	2.5
10"	10"	0.17	0.24	3.9
12"	12"	0.24	0.35	5.6
14"	14"	0.33	0.48	7.6
16"	16"	0.44	0.62	10
18"	18"	0.55	0.79	13
20"	20"	0.68	0.97	16
24"	24"	0.98	1.40	22
30"	30"	1.5	2.2	34
36"	36"	2.2	3.1	50
42"	42"	3.0	4.3	69
48"	48"	3.9	5.6	90
54"	54"	5.0	7.2	110

C. Tap water mains where required to inject chlorine solution into all pipe, fittings, valves and hydrants installed and repaired. Inject chlorine solution into water mains. Leave the chlorine solution in the water mains for 24 hours or longer. Open and close valves in lines being disinfected several times during contact period. Following the contact period, flush

the water mains with potable water until the chlorine residual is 1.0 mg/l or less.

D. Bacteriological Tests - The water main shall be tested for bacteriological quality after disinfection and final flushing. Two or more successive sets of bacteriologically satisfactory samples taken at 24-hour intervals must be recorded before the facilities are released for use. Bacteriological testing shall meet the requirements of the applicable regulatory agency. Disinfection shall be repeated if the piping is not bacteriologically acceptable. Repeat disinfection and testing until the mains are approved for service by the applicable regulatory agency.

E. Hose connections on fire hydrants shall not be used for collecting samples. Contact the applicable regulatory agency for sampling criteria and procedures.

F. The time for disinfection, bacteriological testing, and approval of the main for service shall be included in the contract time.

G. The Contractor shall be responsible for disposal of chlorinated disinfection waters. If the water is discharged in an open channel or storm sewer, the Contractor shall dechlorinate the disinfection waters to 0.05 mg/L of total chlorine.

3.11 COMPLETION SCHEDULING

Complete water mains as they are installed. Test, flush, sterilize, and place in service each part of the water main which is complete and can be placed in service without preventing work to continue on uncompleted parts of the new water mains.

SECTION 02721 - STORM SEWERS

PART 1 - GENERAL

1.1 Please see chapters 100, 400, and 500 of the Town of Westfield Stormwater Manual.

END OF SECTION 02721

SECTION 02731 - GRAVITY SANITARY SEWERS

PART 1 - GENERAL

1.1 GENERAL

A. This section covers all work necessary for the installation of gravity sanitary sewers and related items complete, including manholes, junction chambers, diversion chambers, house services, and miscellaneous concrete structures.

B. Sewer pipe shall be the size shown on the drawings and shall meet all requirements of these specifications and 327 IAC 3.

C. If a material type is shown on the drawings, that material shall be used in the installation unless otherwise noted and as approved by Westfield Public Works.

1.2 PIPE MARKING

Each length of pipe shall bear the name or trademark of the manufacturer, the location of the plant, and the date of manufacture. Each length shall likewise be marked to designate the class or strength of the pipe. The marking shall be made on the exterior or interior of the pipe barrel near the bell or groove end and shall be plainly visible. Pipe shall have permanently extruded stripes on three (3) or four (4) sides according to the following schedule:

Sanitary Sewer: Green Stripes

1.3 SUBMITTALS

Before construction and preferably before fabrication, the Contractor shall submit to the Westfield Public Works Department for approval calculations on the thickness or strength class and drawings showing pipe lengths, joints, and other construction and installation details. All pipe furnished shall be fabricated only in accordance with the drawings and these specifications.

1.4 QUALITY ASSURANCE

A. Performance Tests: The Contractor shall test all gravity sewers constructed. The Contractor shall constantly check horizontal and vertical alignment. Testing for vertical deflection in the case of non-rigid pipe and sewer watertightness testing in the case of all gravity sewers and hydrostatic testing of ductile iron pipe shall be as specified in this Section.

B. Line and Grade Requirements: The Contractor shall provide assurance to the Westfield Public Works Department's representative that the sewer is laid accurately to the required line and grade as shown on the drawings. The Contractor shall utilize a laser beam instrument to lay and check the alignment and grade between manholes. Before proceeding with the next section of sewer, the last section shall be checked for proper line and grade. Variations from a uniform line and grade as shown on the drawings and described below shall be cause for the line to be rejected.

1. Variance from established line and grade shall not be greater than 1/32 of an inch per inch of pipe diameter and not to exceed 1/2 inch, provided that such variation does not result in a level or reverse sloping invert; provided also that the variation in the invert elevation between adjoining ends of pipe, due to non-concentricity of joining surface and pipe interior surfaces, does not exceed 1/64 inch per inch of pipe diameter or 1/2 inch maximum.

C. Test Sections

1. Initial Performance Test: An initial performance and leakage test will be performed on the first sections of sanitary sewer constructed of approximately 600 feet in length of each size and type sewer material installed. No additional sewer pipe shall be installed until the first section of sewer of each size and type of sewer material has satisfactorily passed the test for line and grade and the leakage test.
2. Subsequent Performance Testing: After the initial performance test and leakage test and as work progresses, the Westfield Public Works Department or designee may designate additional sections for testing as conditions in his opinion warrant. If a review of the Contractor's workmanship leads the Westfield Public Works Department or designee to question whether or not the tolerances and standards specified are being met, the Westfield Public Works Department or designee, reserves the right to select other locations and lengths to be tested. The Westfield Public Works Department or designee shall notify the Contractor of the location where a test is to be required not later than 15 days after the sewer installation has been completed. Unless otherwise authorized, the Contractor shall arrange to commence the test within 15 days after the sewer has been installed or 15 days after receiving notification by the Westfield Public Works Department, whichever date is later.
3. Final Performance Testing for Acceptance: Before acceptance for all new sanitary sewers, the Contractor and the Westfield Public Works Department or designee shall check all sewers, even if previously checked, for accurate alignment and grade. Also, all sanitary sewers shall be tested as specified in Articles 3.10 through

3.14 of this Section for watertightness. The program of testing whether by infiltration, exfiltration, air testing, or vacuum testing shall be determined by the Westfield Public Works Department.

1.5 LENGTH OF OPEN TRENCH

Except by permission of the Westfield Public Works Department not more than 450 feet of trench shall be opened at any one time. Not more than 30 feet of trench may be opened in advance of the completed pipe laying operation, and not more than one street crossing may be obstructed by the same trench at any one time.

1.6 RELATION TO WATER MAINS AND STORM SEWERS

A. All storm sewer crossings must be in accordance with the Town of Westfield's Stormwater Technical Standards Manual, Section 501.01. Should specific conditions prevent this separation, the Contractor shall notify the Westfield Public Works Department for specific instructions regarding the treatment of the separation.

B. All water main crossings must be in accordance with 327 IAC 3-6-9 and 327 IAC 8-3.2-9.

C. Sewers must be laid at least 10 feet horizontally from any existing or proposed water main. The distance is to be measured outside edge to outside edge. Should specific conditions prevent this separation, the Contractor shall notify the Westfield Public Works Department for specific instructions regarding the treatment of the separation. Special conditions may allow installation of the sewer closer to a water main, provided that the water main is in a separate trench or on an undisturbed earth shelf located on one side of the sewer and at an elevation so the bottom of the water main is at least 18 inches above the top of the sewer. It will be necessary to install 150 psi water main pipe and joints as sewer pipe for the congested areas.

D. Whenever the sewer crosses a water main, it should be laid at least 18 inches below the main, or the water main should be relaid with fittings to cross over the sewer. The crossing shall be arranged so that the sewer joints will be equidistant and as far as possible from the water main joints. Any joints within a distance of 10 feet from either side of the crossing must be compression joints. All crossings must be at a minimum of 45 degrees from center lines of the sanitary sewer and the water main.

E. When it is impossible to obtain proper horizontal and vertical separation as stipulated above, the sewer shall be designed and constructed equal to water pipe, and shall be pressure tested to assure watertightness prior to

backfilling. Maximum distance between sewer pipe joints and water pipe shall be provided where vertical separation is a problem.

PART 2 - PRODUCTS

2.1 MATERIALS

A. Sewers 15 Inches or Smaller

1. Sewers 15 inches in diameter or smaller shall be PVC composite pipe, polyvinyl chloride pipe or ductile iron pipe.
2. PVC Composite Sewer Pipe and Fittings: PVC composite sewer pipe and fittings shall conform to ASTM D2680, latest revision.
3. Polyvinyl Chloride Pipe and Fittings

a. Polyvinyl chloride pipe and fittings shall conform to ASTM D3034 SDR 35, Type PSM, latest revision.
b. Maximum diameter of PVC sewer pipe to be used is 15 inches.

4. Ductile Iron Pipe and Fittings: Ductile iron pipe and fittings shall conform to the requirements of ANSI/ASTM A746, Ductile Iron Gravity Sewer Pipe.

a. Thickness class requirements of ductile iron pipe to be used in conveyance of sanitary sewage by gravity shall be minimum thickness of Class 350 unless otherwise noted for standard length pipe.
b. Outside surfaces of the pipe and fittings shall be bituminous coated complying with ANSI/AWWA A21.51/C151 and ANSI/AWWA A2110/C110.
c. Inside surfaces of all pipe, fittings and adapters shall be lined with cement mortar and a bituminous seal coat. Cement mortar lining and bituminous seal coat shall meet the requirements of ANSI/AWWA A21.4/C104.
d. Ductile iron pipe and fittings shall be push-on type conforming to ANSI A21.11 (AWWA C111), latest revision. Fittings shall be ductile iron and shall comply with ANSI Specification A21.10, latest revision, with mechanical joints for 150 psi working pressure.

5. Joints for PVC Sewer Pipe

a. Joints on PVC sewer pipe shall be the integral bell type gasketed joint designed so that when assembled the elastomeric gasket inside the bell is compressed radially on

the pipe spigot to form a positive seal. The joint shall be so designed to avoid displacement of the gasket when installed in accordance with manufacturer's recommendations. The joint shall comply with the physical requirements of ASTM D3212, and the gasket shall be the only element depended upon to make the joint flexible and watertight.
b. All PVC Pipe entering a manhole shall have a manhole waterstop gasket as supplied by the manufacturer firmly clamped around the pipe at the manhole. If flexible entry type manhole system is used, the waterstop gasket is not required.

B. Sewers Greater than 15 inches

1. Ductile Iron Pipe and Fittings: Ductile iron pipe and fittings shall conform to the requirements of ANSI/ASTM A746, Ductile Iron Gravity Sewer Pipe.

a. Thickness class requirements of ductile iron pipe to be used in conveyance of sanitary sewage by gravity shall be minimum thickness of Class 350 unless otherwise noted for standard length pipe.
b. Outside surfaces of the pipe and fittings shall be bituminous coated complying with ANSI/AWWA A21.51/C151 and ANSI/AWWA A2110/C110.
c. Inside surfaces of all pipe, fittings and adapters shall be lined with cement mortar and a bituminous seal coat. Cement mortar lining and bituminous seal coat shall meet the requirements of ANSI/AWWA A21.4/C104.
d. Ductile iron pipe and fittings shall be push-on type conforming to ANSI A21.11 (AWWA C111), latest revision. Fittings shall be ductile iron and shall comply with ANSI Specification A21.10, latest revision, with mechanical joints for 150 psi working pressure.

C. Fittings

1. Fittings such as wyes and bends shall be made in such a manner as will provide strength and watertightness at least equal to the class of the adjacent main line pipe to which they are jointed and shall conform to all other requirements specified for pipe of corresponding class and internal diameter. Joints shall be of the same type as used on the adjoining pipe.
2. Fabricated branches for wyes and tees shall be securely attached to the wall of the pipe in a watertight manner and shall be flush with

the inside surface of the pipe. The branches shall have their axes perpendicular to the longitudinal axis of the pipe. Wye branches shall have their axes approximately 60 degrees for clay pipe and 45 degrees for concrete pipe from the longitudinal axis of the pipe, measured from the bell end. Pipe reinforcement shall not be interrupted beyond a radial distance of 3 inches outside of the fitting.

D. Manholes and Other Structures: Manholes shall be constructed of monolithic concrete or precast manhole sections. Precast manhole sections shall conform to requirements of ASTM Specification C478, latest revision.

1. Materials for manholes, junction chambers, diversion chambers, and miscellaneous concrete structures shall comply with the following:

a. Concrete for precast manhole sections shall be 3000 psi concrete. Monolithic manholes shall use 4000 psi concrete. Ready-mix concrete shall conform to ASTM C94 Alternate 2. Maximum size of aggregate shall be 1-1/2 inches. Slump shall be between 2 and 4 inches.
b. Forms for chamber and structures shall be plywood or other approved material. Steel forms shall be used for the inside face of monolithic concrete manholes.
c. Reinforcing steel shall conform to ASTM A615, Grade 40 deformed bars, or ASTM A616, Grade 40 deformed bars.
d. Mortar Materials

(1) Sand - ASTM Designation C144, passing a No. 8 sieve.
(2) Cement - ASTM Designation C150, Type 1.
(3) Water - shall be potable.

e. All joints shall be fully sealed and waterproofed. Rubber gaskets for precast concrete manhole sections shall meet the requirements of ASTM C443. The gasket shall be the sole element depended upon to make the joint flexible and watertight.
f. The manufacturer of the precast manholes shall provide core-drilled openings to produce a smooth, uniform, cylindrical hole of the proper size to accommodate a resilient connector meeting the requirements of ASTM C 923 for all sewers entering and leaving the manhole. The resilient connectors shall be either Press-Seal Gasket Corp., which provides PSX gasket or Press Wedge II; or similar

flexible manhole sleeves furnished by Kor-N-Seal by NPG Systems, Inc.; or equal.
g. Precast manhole sections shall be steam cured and shall not be shipped from the point of manufacture for at least five days after having been cast. The exterior surface of each section shall be thoroughly coated with a coal tar epoxy type coating as manufactured by TNEMEC Co, Tnemec-46H413 Hi-Build Tneme-Tar; or approved equal by the Engineer. Final dry mils thickness shall be a minimum of 12 mils. Monolithic concrete manholes and other concrete structures shall be cured for a minimum of seven days and then coated in the field with a coal tar epoxy type coating as mentioned above.
h. Manhole castings shall be of good quality cast iron and/or ductile iron, conforming to ASTM Designation A48. Castings shall have a total weight of not less than 335 pounds and shall conform to the design of the manhole casting as shown on the standard detail sheet. Castings shall have three bolt holes equally spaced around base of frame and shall be securely anchored to cone section to provide a water tight-fit with three 3/8-inch stainless steel bolts and expansion shields. Unless specifically designated otherwise, manhole castings shall be the non-locking type.
i. Manhole steps shall be made from a steel reinforcing rod encapsulated in a copolymer polypropylene resin. The manhole steps shall equal or exceed OSHA requirements. Manhole steps manufactured by M. A. Industries, Inc., PS-I-PF, Clay & Bailey Mfg. Co., or equal, are acceptable.
j. Any other special manholes, junction chambers, diversion chambers, and miscellaneous concrete structures shall be constructed as detailed on the drawings.
k. The Contractor may, at his option, furnish and install a combination precast concrete base and first section with precut openings for services. Detailed drawings shall be submitted to the Westfield Public Works Department prior to manufacture.
l. Precast manhole sections shall have a lifting eye cast into the wall for lifting the section. Lifting holes through the precast section will not be allowed.

E. Grease Trap: Grease trap tank shall be constructed of 6000 psi concrete. All tank joints shall be sealed watertight with butyl rubber extrudible preformed gasket material. All outside riser ring surfaces shall be waterproofed 1/8" with trowelable grade butyl rubber back plaster.

PART 3 - EXECUTION

3.1 INSPECTION AND REJECTION OF PIPE

A. The quality of all materials, the process of manufacture, and the finished pipe shall be subject to inspection and approval by the Westfield Public Works Department. Such inspection may be made at the place of manufacture or on the work after delivery, or at both places; and the pipe shall be subject to rejection at any time on account of failure to meet any of the specifications' requirements even though sample pipes may have been accepted as satisfactory at the place of manufacture.

B. Prior to being lowered into the trench, each pipe shall be carefully inspected, and those not meeting the specifications shall be rejected and at once removed from the work.

C. The Westfield Public Works Department or designee shall have the right to cut cores from such pieces of the concrete pipe as desired for such inspection and test as may apply. The cost to cut the cores and administer appropriate test shall be paid by the developer.

D. Holes left by the removal of cores shall be filled in an approved manner by and at the expense of the manufacturer of the pipe.

E. The Westfield Public Works Department or designee shall also have the right to take samples of concrete after it has been mixed, or as it is being placed in the forms or molds, and to make such inspection and tests thereof as desired. The cost to administer appropriate test shall be paid by the developer.

F. Any pipe which has been damaged after delivery will be rejected and replaced solely at the Contractor's expense.

3.2 HANDLING PIPE

Each pipe section shall be handled into its position in the trench only in such manner and by such means as the Westfield Public Works Department or designee approves as satisfactory. As far as practicable, the Contractor will be required to furnish slings, straps, and other approved devices to permit satisfactory support of all parts of the pipe when it is lifted.

3.3 NOTICE TO WESTFIELD PUBLIC WORKS DEPARTMENT

The Westfield Public Works Department or designee shall be notified when the pipes are to be laid in the trench. At least 15 feet of the pipe shall, under ordinary circumstances, be laid before covering begins.

3.4 LAYING PIPE

A. All pipe shall be reinspected for soundness and damage due to handling immediately before being lowered into the trench. Any pipe found to be unsound or damaged will be rejected and shall be removed immediately from the site of the work.

B. All pipe shall be laid accurately to the required line and grade as shown on the drawings, and in the manner prescribed by the pipe manufacturer and appropriate ASTM Specifications, to form a close, concentric joint with the adjoining pipe and to bring the invert of each section to the required grade. The supporting of pipe on block will not be permitted.

C. Pipe laying shall proceed upgrade, beginning at the lower end of the sewer.

D. All sewers shall be designed and constructed to give mean velocities, when flowing full, of not less than 2.0 feet per second (0.6 m/s), based on Manning's formula using an "n" value of 0.013. The following are the recommended minimum slopes which should be provided; however, slopes greater than these are desirable. Refer to 327 IAC 3-6-12 for anchoring requirements for extremely steep slopes.

Nominal Sewer Size		**Minimum Slope in Feet Per 100 Feet (m/100m)**
8 inch	(200 mm)	0.40
10 inch	(250 mm)	0.28
12 inch	(300 mm)	0.22
14 inch	(350 mm)	0.17
15 inch	(375 mm)	0.15
16 inch	(400 mm)	0.14
18 inch	(450 mm)	0.12
21 inch	(525 mm)	0.10
24 inch	(600 mm)	0.08
27 inch	(675 mm)	0.067
30 inch	(750 mm)	0.058
33 inch	(825 mm)	0.052
36 inch	(900 mm)	0.046
39 inch	(975 mm)	0.041
42 inch	(1050 mm)	0.037

E. Watertight work in conformance with 327 IAC 3 is required, and the Contractor shall construct the sewers with the type of joint specified therein.

F. All pipe shall be laid to the line and grade as shown on the drawings. Variations from a uniform line and grade as shown on the drawings shall be cause for the line to be rejected.

G. The ends of the pipe shall be satisfactorily cleaned just before laying, and the joint shall be made in a satisfactory manner in accordance with the recommendations of the manufacturer on particular type of joint. All joint work shall be done by experienced workmen.

H. PVC (polyvinyl chloride) gravity sewer pipe and fittings, ASTM Designation D3034 SDR 35, shall be installed in accordance with the directions contained in ASTM Designation D2321. Only materials classified as Class I will be acceptable for bedding, haunching, and initial backfill of the pipe placed and compacted in accordance with ASTM D2321.

I. Joints on PVC pipe shall be the integral bell type gasketed joint designed so that when assembled the elastomeric gasket inside the bell is compressed radially on the pipe spigot to form a positive seal. The joint shall be so designed to avoid displacement of the gasket when installed in accordance with the manufacturer's recommendations. The gasket shall be the only element depended upon to make the joint flexible and watertight.

J. All PVC pipe entering a manhole shall have manhole waterstop gasket as supplied by the manufacturer firmly clamped around the pipe. If flexible entry type manhole system is used, the waterstop gasket is not required.

K. All PVC pipe shall have a deflection test performed by the Contractor in the presence of the Westfield Public Works Department or designee.

L. All pipe shall be bedded as described in this specification under Pipe Bedding. Bell holes shall be excavated in advance of pipe laying so the entire pipe barrel will bear uniformly on the prepared subgrade.

M. Each length of pipe shall be mechanically pulled "home" with a winch or come-along against the section previously laid and held in place until the trench and bedding are prepared for the next pipe section. Care shall be taken in laying the pipe so not to damage the bell end of the pipe. Mechanical means consisting of a cable placed inside the pipe with a winch, jack, or come-along shall be considered to pull the pipe home where pushing the pipe will not result in a joint going completely home and staying in place. Pushing the pipe home shall be done by means of a block and push bar. Use of hydraulic excavating equipment as the means of pushing or moving the pipe to grade will not be permitted.

CITY OF WESTFIELD SPECIFICATIONS CAN BE FOUND AT: http://www.westfield.in.gov/egov/apps/document/center.egov?view=item;id=50

ELEMENTS
Engineering, LLC
6213 Behner Way
Indianapolis, IN 46250
(317) 490-7054

THE ANDERSON CORPORATION
301 S. UNION STREET
WESTFIELD, IN 46074

NORTHWALK RESIDENTIAL COMMUNITY
740 N. UNION STREET
WESTFIELD, IN 46074

CITY OF WESTFIELD
SPECIFICATIONS

JENNIFER L. ROBERTS REGISTERED PE19900150 STATE OF INDIANA PROFESSIONAL ENGINEER

APPROVAL PENDING NOT FOR CONSTRUCTION

DATE:

DWN BY:	CC
CHKD. BY:	JR
SCALE:	N/A
DATE:	4/4/2014

PROJECT NUMBER
13-76-001

DESIGN PHASE
PLAN REVIEW

PLAN NUMBER
C007

N. The Contractor shall use laser beam equipment to maintain accurate alignment and grade. A qualified operator shall handle the equipment during the course of construction. If bending of the laser beam due to air temperature variations or dust in the air is apparent "within the pipe" units, a fan shall be provided to circulate the air. However, air velocity shall not be so excessive as to cause pulsating or vibrating of the beam. Survey instruments may be used for checking alignment and grade if questions arise about the accuracy of the work.

O. Open excavation shall be satisfactorily protected at all times. At the end of each day's work, the open ends of all pipes shall be protected against the entrance of animals, earth, or debris by bulkheads or stoppers. The bulkheads or stoppers shall be perforated to allow passage of water into the installed pipe line to prevent flotation of the pipe line. Any earth or other material that may find entrance into the main sewer or into any lateral sewer through any such open end of unplugged branch must be removed at the Contractor's expense.

P. The Contractor shall conduct a leakage test as described in Sewer Tests of the specification on the first section of sewer of each size and type sewer material installed. No additional sewer pipe shall be installed until the first reach of sewer of each size and each type sewer material has satisfactorily passed the leakage test.

Q. The Contractor shall prevent all ground water and surface water from entering the existing sewer system during construction of a new sewer or force main extension.

R. Sanitary sewer designs that require crossing a county legal drain shall be approved and constructed per the latest standards of the Hamilton County Surveyor's Office.

3.5 PIPE BEDDING AND HAUNCHING

A. Each pipe section shall be laid in a firm foundation of bedding material and haunched and backfilled with care.

B. Prior to pipe installation, carefully bring bedding material to grade along the entire length of pipe to be installed. To provide adequate support for the pipe, the following bedding procedures are recommended.

1. When Class I material is used for bedding, little or no compaction is necessary due to the nature of the angular particles. A depth of 4 to 6 inches is generally sufficient to provide uniform bedding.

C. Bedding material shall have a minimum thickness beneath the pipe of 4 inches (100 mm) or one-eighth of the outside diameter of the pipe, whichever is greater, and shall extend up the sides of the pipe one-sixth of the outside diameter of the pipe.

D. For rigid pipe, such as concrete or ductile iron, backfill between the bedding material and a plane 12 inches (300 mm) over the top of the pipe shall be hand-placed finely divided earth, free from debris and stones, or granular backfill if required.

E. For flexible pipe such as PVC, the placement of embedment material, consisting of bedding, haunching, and initial backfill, must be done with care. The ability of the pipe to withstand loading in a trench depends a large part on the method employed in its installation. Class I material, as defined in specification Section 02222, Article 2.1, paragraph A, shall be used as embedment material for flexible pipe. Bedding thickness shall be as specified in paragraph C of this Section. The haunching material (the material from the bedding to the pipe springline) and initial backfill (the material from the pipe springline to a plane 12-inches over the top of pipe), shall be hand placed. Care must be taken to not cause damage by compacting the material directly over the pipe.

F. In yielding subsoils, the trench bottom shall be undercut to the depth necessary and backfilled with graded, crushed stone to form a firm foundation.

G. Where excavation occurs in rock or hard shale, the trench bottom shall be undercut and a minimum of 6 inches (150 mm) crushed stone bedding placed prior to pipe installation. Additional payment for rock excavation shall be made on "unit cost" projects only, and as prescribed under basis for payment.

3.6 MANHOLES AND OTHER STRUCTURES

A. Manholes shall meet all requirements of 327 IAC 3-6-10.

B. Manholes and other structures are to be constructed at locations shown on the drawings and in accordance with the following specifications:

1. Precast concrete manhole sections shall conform to ASTM Designation C478, except as modified herein:

a. The joint design of the precast sections shall consist of a bell or groove on one end of the unit of pipe and a spigot or tongue on the adjacent end of the joining section.

b. The joint shall consist of a round rubber gasket confined in a groove in the spigot end of the precast manhole section and shall conform to Sections 6.1.6, 6.1.7 and 9 of ASTM Designation C443, latest revision and a 6 inch wide flexible butyl rubber joint sealant between the outside joints. Inside manhole joints are to be sealed with hydroplug or non-shrink grout and brushed smooth.

2. Openings in manhole sections for sewer connections shall be core-drilled at the point of manufacture and shall be done to produce a smooth, uniform, cylindrical hole of proper size to accommodate a resilient connector meeting requirements of ASTM C 923. The resilient connectors shall be either Press-Seal Gasket Corp., PSX Gasket or Press-Wedge II; or similar flexible manhole sleeves furnished by Kor-N-Seal by NPC Systems, Inc.; or equal.
3. Manhole bases shall be cast-in-place concrete, reinforced as shown on the Standard Detail Sheet, or monolithic base and first section combination. Manhole bases shall be cast or placed on a minimum of 6 inches of compacted crushed stone.
4. Manhole channels or inverts shall be preformed and poured with Class "H" concrete to the spring line of the connecting pipe. The finished invert shall be a semi-circular shaped smooth channel directing the flow to the downstream sewer.
5. Monolithic concrete manholes, junction chambers, and other cast-in-place concrete structures shall be cured for a minimum of seven days. The exterior surfaces shall then be coated thoroughly with a coal tar epoxy type coating as manufactured by TNEMEC Co., Tnemec-46H413 Hi-Build Tnemc-Tar; or approved equal by the Westfield Public Works Department. Coating shall be 12 mil minimum dry film thickness. Each joint of precast concrete manhole sections, lifting holes, and holes left by the removal of cores shall be fully mortared and shall be coated with a 12 mil minimum dry film thickness of coal tar epoxy as specified upon reaching its final set.
6. Any additional holes cut in the field shall be drilled with a core-drill or in a manner approved by the Westfield Public Works Department or designee.
7. Manhole frames and lids shall weigh not less than 335 pounds and be of good quality cast iron, conforming to ADTM Designation A48. Unless specifically designated otherwise, manhole castings shall be the non-locking type. All manhole frames shall be cast or drilled with two cast or drilled with three holes equally spaced around base of frame and shall be securely anchored to cone section with three 3/8-inch stainless steel bolts, nuts, and washers. The joint between the casting frame and cone section shall be first sealed with cement mortar and then coated with a pliable butyl

rubber or a coal tar epoxy coating upon reaching its final set to become a watertight joint.
8. Manhole steps shall be made from a steel reinforcing rod encapsulated in a copolymer polypropylene resin. Steps shall be placed as shown on the approved drawings.

3.7 HOUSE/BUILDING SERVICES

A. The Contractor shall install 6-inch diameter house/building service sewer shall be installed as shown on the Standard Detail Sheet. The house/building service shall extend from a "wye" or "tee" fitting in the main sewer line to the property line or easement line, unless stated otherwise.

B. A backwater prevention valve shall be provided for each sanitary sewer lateral. The backwater prevention valve shall be located on the inside of basements or crawl spaces and readily accessible at all times. The backwater prevention valve for buildings located on slabs shall be installed on the building side of the clean out.

C. The Contractor shall contact the individual property owners for the preferred location of the house/building service to best suit the property owner's needs. If the Contractor is unable to contact the property owner in advance of laying the main sewer by or across the property, the Contractor shall re-notify the Westfield Public Works Department or designee in writing.

D. Fittings for house/building service connections on a main line sewer 15 inches in diameter or smaller shall be tees or 45-degree wyes and shall be of the same material as the main line sewer, unless otherwise approved by the Westfield Public Works Department.

E. House/building services and connections on main line sewers greater than 15 inches in diameter shall be of a type that will maintain the structural integrity of the main line sewer and provide a watertight connection. Intrusion of house/building services into the flow way of the main line sewer should not be permitted.

F. Six-inch lateral pipe shall connect to the main line sewer at an angle of 15 degrees to 45 degrees from the spring line and shall include the necessary bends and straight pipe sections to reach the property line at the elevations specified. A pipe stopper or a bell cap shall be placed on/in the last bell. This stopper or bell cap should be compatible with the type of infiltration/exfiltration test performed on the sewer.

G. The Contractor shall furnish and use the proper fittings, couplings, and adapters suited to make the transition between different pipe materials which will maintain the structural integrity and the watertightness of the entire sewer system.

H. At the discretion of the Westfield Public Works Department, when and where improper installation practices are suspected or questionable bedding materials and methods are employed, or where the installations are severe, the Contractor will have to perform deflection testing on the 6-inch house laterals as specified in Article 3.9.

I. Backfill around fittings and lateral pipe shall be carefully placed and compacted to prevent damage from backfill settlement and shall be installed in same manner as described for sewer installation.

J. The Contractor shall keep accurate horizontal and vertical location measurements of each house/building service installed. The location of all house/building services shall be shown on digital as-builts as described in Section 01001, Article 1.14. . The accuracy of the measurements shall be the Contractor's responsibility.

3.8 STUBS, CONNECTIONS, BULKHEADS, AND MISCELLANEOUS ITEMS OF WORK

A. Where special junction chambers are to be constructed or where existing sewers carrying sanitary sewage are encountered, the Contractor shall provide and maintain temporary connections to prevent a nuisance.

B. Where called for shop connections and stubs for future sewer connections shall be provided.

C. New sewer connections to existing manholes shall be neatly made by cutting a hole in the existing structure, concreting the sewer in place, and providing a watertight connection.

D. The Contractor shall not connect any existing sewers or house/building services prior to the completion of the exfiltration/infiltration tests, air tests, and acceptance of the sewer without the permission of the Westfield Public Works Department.

3.9 VERTICAL DEFLECTION TESTING

For PVC pipe, the entire length of installed mainline pipe shall be tested for acceptance with an approved go-no-go mandrel under the observation of the design engineer and a Westfield Public Works representative. The testing shall be conducted after the final backfill has been in place for at least 30 days. No

pipe shall exceed a deflection of 5%. The deflection test shall be run using a mandrel having a diameter equal to 95% of the inside diameter of the pipe in accordance with ASTM D-3034 Appendices. The pipe shall be measured in compliance with ASTM D-2122. All pipe exceeding the allowable deflection shall be replaced, repaired, and retested.

3.10 INFILTRATION LIMITS

A. Maximum infiltration/exfiltration limits for all new sanitary sewers shall not exceed 200 gallons per inch of diameter per mile of pipe per 24 hours for any section of the system. All sections of the sewer shall be tested, and any sections not meeting this infiltration standard shall be repaired and retested.

B. The Contractor shall note the special provision under Article 3.4, Paragraph P, that the first section of sewer of each size and type of sewer shall be given a satisfactory leakage test before proceeding with any additional construction.

3.11 SEWER WATERTIGHTNESS TESTING

A. Infiltration testing must be performed in accordance with 327 IAC 3-6-19.d. Tests for watertightness shall be conducted on all installed sewers in the presence of and in the manner accepted by the Westfield Public Works Department or designee. The Contractor shall furnish and install all equipment necessary for the sewer tests.

B. Watertightness tests shall be conducted on short sections of the sewer as soon as the manholes have been constructed and the backfilling completed.

C. Where the section tested is in excess of the allowable limits, the Contractor shall correct the construction of the sewer so that the section tested is within the allowable limit. All methods and materials used in the repair shall be approved by the Westfield Public Works Department or designee.

D. The program of testing shall fit the conditions as determined by the Westfield Public Works Department or designee using Air Test for Leakage. When ductile iron pipe with push-on type joints are used for sewer construction, a hydrostatic pressure test shall be performed.

A few key manholes shall have a one-half inch diameter threaded pipe nipple installed through the manhole wall directly on top of one of the sanitary sewers entering the manhole. Every manhole need not have a pipe nipple installed. The design engineer shall designate the manholes to

be used for gauging the ground water level. The pipe nipples shall be sealed with a treaded one-half inch cap.

Immediately before air testing, the ground water level shall be determined by removing the treaded caps(s) from the nipple(s) nearest the section to be tested, blowing air through the pipe nipple(s) to remove any obstructions, and then connecting clear plastic tube(s) to the pipe nipple(s). Each plastic shall be held vertically to allow groundwater to rise in it. After the water level in the tube has stopped rising, a measurement of the height in feet of water over the invert of the sewer pipe shall be taken. If the section to be tested is not immediately adjacent to an installed pipe nipple, the groundwater height shall be estimated based upon nearby height readings and the pipe's invert elevation.

Alternate groundwater monitoring methods shall require the prior written approval of the WPWD Director.

1. The Air Test for Leakage

a. The air test for leakage shall be used to test sewer watertightness on all sewer pipe unless otherwise noted.
b. The ends of the sewer section being tested shall be sealed and properly blocked. The seal at one end shall have an orifice through which to pass air into the pipe. An air supply shall be connected to the orifice at one end of the section. The air supply line will contain an off-on gas valve and a pressure gauge having a range from 0 to 25 psi. The gauge shall have minimum divisions of 0.10 psi and shall have an accuracy of the nearest ±0.1 psi. The seals at each manhole shall be properly blocked to prevent displacement while the line is under pressure.

2. Procedure for Conducting a Low Pressure Air Test

a. Clean pipe to be tested by propelling a snug fitting inflated ball through the pipe by water pressure or other adequate method. This step is important because it not only flushes out construction debris but the water used to flush the pipe dampens the pipe wall. The rate of air loss through pipe wall permeation can be significant on dry pipes.
b. Plug all pipe outlets with pneumatic plugs having a sealing length equal to or greater than the diameter of the pipe to be tested. The pneumatic plug shall be able to resist internal testing pressures without requiring external bracing.

c. The groundwater level surrounding the section of sewer under testing shall be determined by one of the procedures previously outlined in paragraph D. If the groundwater table is above the pipe, then test pressures shall be increased by the corresponding increment (e.g., if the groundwater table is above the lowest crown of the pipe, the air pressure should be increased 0.433 times each foot of water.)
d. Once the pipe outlet plugs are securely in place, pressurized air is introduced to the system. The air shall be fed through a single control panel with three individual hose connections as follows:

(1) from control panel to pneumatic plugs for inflation in sewer pipe;
(2) from control panel to sealed line for introducing the pressurized air;
(3) from sealed line to control panel. This line will enable continuous monitoring of the air pressure rise in the sealed line.

e. The air shall be introduced slowly to the section of pipe under evaluation until the internal air pressure is raised to 4.0 psig greater than the hydrostatic pressure head created by the existence of groundwater that is over the pipe section.
f. A minimum of two minutes shall be provided for the air pressure to stabilize to conditions within the pipe. (This stabilization period is necessary for variations in temperature to adjust to the interior pipe conditions.) Air may be added slowly to maintain a pressure from 3.5 to 4.0 psig for at least two minutes.
g. After the stabilization period, when the pressure reaches exactly 3.5 psig, the stopwatch shall be started; and when the pressure reaches 2.5 psig, it is stopped. The portion of the line being tested shall be acceptable if the time in minutes for the air pressure to decrease from 3.5 psig to 2.5 psig is greater than the time shown in the following table:

Pipe Diameter (Inches)	Time (Minutes)
4	2.0
6	3.0
8	4.0
10	5.0
12	5.5
15	7.5
18	8.5
21	10.0
24	11.5

h. In areas where the groundwater is above the top of the pipe, the test pressures shall be increased by 0.433 per foot of groundwater (e.g., if the groundwater is 11-1/2 feet, the 3.5 to 2.5 pressure drop will be increased by 5 psi; the time then will be measured for a pressure drop from 8.5 psi to 7.5 psi.)

3. Safety Precautions During Air Test

a. The air test may be dangerous if, because of ignorance or carelessness, a line is improperly prepared. It is extremely important that the various plugs be installed and braced in such a way as to prevent blowouts. Inasmuch as a force of 250 pounds is exerted on an 8-inch plug by an internal pipe pressure of 5 psi, it should be realized that sudden expulsion of a poorly installed plug or of a plug that is partially deflated before the pipe pressure is released can be dangerous.
b. As a safety precaution, pressurizing equipment should include a regulator set at perhaps 10 psi to avoid over-pressurizing and damaging an otherwise acceptable line. No one shall be allowed in the manholes during testing.

3.12 HYDROSTATIC TESTING

A. A hydrostatic test on ductile iron pipe with push-on type joints has two purposes: one is to set the gaskets in place, and the other is to provide a leakage test.

B. Said test shall include all ductile iron sewer pipe with push-on type joints installed by the Contractor. The Contractor shall make arrangements with the Westfield Public Works Department or designee for scheduling the test after the sewer pipe has been accepted as being ready for testing. The test shall be performed in the presence of the Westfield Public Works Department or designee on the day mutually agreed upon.

C. Water for testing may be obtained from the Westfield Public Works Department or designee. The cost of the water supplied for such testing is to be paid by the Developer. The Contractor shall furnish all necessary

equipment, piping, pumps, fittings, gauges, and operating personnel to properly conduct the test.

D. Hydrostatic test on ductile iron pipe with push-on type joints installed as gravity sewers and siphons shall be in accordance with the following provisions:

1. The ends of the sewer section being tested shall have test plugs or caps adapted with a tap of adequate diameter to fill and pressurize the system with water.
2. When a section is terminated at a manhole with a plain end (spigot), the pipe must extend into the manhole of sufficient length to accommodate a restraining cap. The benchwall shall be formed in the manhole after the test section has been approved.
3. Water shall be introduced into the section to be tested at the lower end. The upper end shall have an orifice at the top of the plug or cap to expel air when filling the system with water. All air shall be expelled from the pipe.
4. The test plugs or caps shall be capable of withstanding an internal pressure of 175 psi.
5. The system shall be tested in conformance with Section 13 of AWWA Specifications 600, at 50 pounds per square inch over a period of not less than one hour. The system will not be acceptable until all leaks have been repaired.
6. Hydrostatic test may be dangerous if, because of ignorance or carelessness, a line is improperly prepared. It is extremely important that the various plugs be installed in such a way as to prevent blowouts. Inasmuch as a force of 2500 pounds is exerted on an 8-inch plug by an internal pipe pressure of 50 psi, it should be realized that sudden expulsion of a poorly installed plug or cap can be dangerous. As a safety precaution, no one shall be allowed in the manholes when the pipe is pressurized.

E. A hydrostatic test on ductile iron pipe with push-on type joints installed as force main shall be in accordance with Article 3.12, paragraph D., with the following exception:

1. The force main shall be subjected to an internal pressure equal to 50% more than the maximum operating pressure, but in no case less than 50 psig or greater than 120 psig.

3.13 MANHOLE VACUUM TESTING

A. A vacuum test shall be conducted by the Contractor on all manholes to ensure watertightness and manhole integrity.

B. The equipment required to conduct a vacuum test on manholes includes inflatable pipe plugs, test head, vacuum pump, flexible air hose, and a vacuum gage. The test equipment shall be capable of drawing a vacuum of 10-inch Hg. The equipment shall be designed specifically for the purpose of testing manholes and shall be as manufactured by P.A. Glazier, Inc., Worchester, Massachusetts 10002, or equal.

C. The procedure for conducting an air test on manholes shall be in accordance with these specifications and ASTM C1244-05a. :

1. Each manhole shall be tested immediately after assembly and prior to setting the casting or backfilling around the structure.
2. All lift holes shall be plugged with non-shrink grout.
3. All pipes entering the manhole shall be securely plugged and adequately braced against the inside of the manhole to prevent being drawn out of the pipe.
4. The test head shall be placed on the inside of the cone section and sealed with an inflatable seal or per manufacturer's recommendation.
5. A vacuum of 10 inches of mercury (Hg) shall be drawn, the vacuum line closed, and the vacuum pump shut off. With the valves closed, the time shall be measured for the vacuum to drop to 9 inches. The manhole shall pass if the time is greater than the following:

Minimum Test Times for Various Manhole Diameters in Seconds
ASTM C 1244-05a

Depth, ft.	Diameter, in.								
	48	54	60	66	72	78	84	90	96
<4	10	12	13	15	16	18	19	21	23
6	15	18	20	22	25	26	29	31	34
8	20	23	26	29	33	35	38	41	45
10	25	29	33	36	41	44	48	52	56
12	30	35	39	43	49	53	57	62	67
14	35	41	46	51	57	62	67	72	78
16	40	46	52	58	67	70	76	83	89
18	45	53	59	65	73	79	86	93	100
20	50	53	65	72	81	88	95	103	111
22	55	64	72	79	89	97	105	114	122
24	59	64	78	87	97	106	114	124	133
26	64	75	85	94	105	114	124	134	144
28	69	81	91	101	113	123	133	145	155
30	74	87	98	108	121	132	143	155	166

3.14 CLOSED CIRCUIT TELEVISION INSPECTION

A. All sections of sewers shall be inspected by closed circuit television.

B. All unacceptable conditions found during television inspection must be corrected by the Contractor and re-televised.

C. Unacceptable conditions are conditions that adversely affect the ability of the system to function as designed or to be properly maintained and may include, but are not limited to, the following:

1. Protruding taps
2. Cracked or faulty pipe
3. Misaligned or deformed pipe
4. Debris in line
5. Infiltration / exfiltration
6. Excessive gaps at joints
7. Bellies or sags with a depth greater than or equal to 10% (or a maximum of 1-1/2 inches) of pipe diameter and/or a length greater than 25 feet.

D. See Specification Section 02750 Sewer Televising for procedures.

3.15 DIGITAL AS-BUILTS/RECORD DRAWINGS

A. The Developer shall prepare or be responsible for the preparation and submittal of digital as-builts as described in Section 01001, Article 1.14.

SECTION 02750 - SEWER TELEVISING

PART 1 - GENERAL

1.1 GENERAL

A. This section covers all work necessary for the cleaning and televising of sanitary and storm sewers to determine the water tightness, connections, alignment, grades and locations of service.

B. The type equipment required for the work and the methods of accomplishing the work, as well as the type of materials to be incorporated into the work, are covered in this Section.

C. The Contractor shall introduce enough water into sewer pipe to indicate bellies or sags in line being televised.

PART 2 - PRODUCTS

2.1 EQUIPMENT REQUIRED

A. The Contractor shall furnish all labor, electronic equipment, and technicians to perform the closed circuit television inspection of the sewers. Operation of the equipment is to be controlled from above ground with a skilled technician at the control panel in the television studio, controlling the movement of the television camera through the sewer in either direction.

B. The color television camera shall be one specifically designed and constructed for the purpose of televising sewers. The color camera shall have a high resolution lens capable of spanning 360 degrees circumference and 270 degrees on horizontal axis to televise sewer lines 8 inches in diameter and larger. Focal distance shall be adjustable through a range of 1 inch to infinity. The purpose of the rotating head camera is to view all service connections and to locate all defects, as well as any questionable problem areas. The camera shall be mounted to a self-propelled crawler/transporter.

C. Camera lighting quality shall be suitable to provide a clear, continuously in focus picture of the entire inside periphery of the sewer pipe for all conditions encountered during the work. The camera shall be able to operate efficiently in 100% humidity conditions. The camera, television monitor, and all other necessary components of the video system shall be capable of producing a minimum 350-line resolution color video picture.

D. The view seen by the television camera shall be transmitted to a VCR and a color monitor of not less than 17 inches. The TV camera shall have the capability of transmitting a color picture with not less than 600 lines of resolution, the monitor and VCR shall have the capability of receiving same. The monitor and VCR shall be located inside a mobile TV studio.

E. Contractor shall supply digital video to client on 700 mb compact disks in the following format:

1. Minimum 640 x 480 pixel dimension
2. Minimum 24 fps (frames per second)
3. Indexed chapters to allow instant access to points of observation
4. Cross-platform compatible to allow for viewing on any operating system

F. The Contractor's mobile studio shall be large enough to accommodate up to three people for the purpose of viewing the monitor while the inspection is in progress. The Westfield Public Works Department or designee shall have access to view the television screen at all times.

G. The Contractor will provide two clear copies of the video/television inspection to the Westfield Public Works Department with complete log sheets.

H. The technician will provide audio input at the time of inspection pointing out cracks, root intrusion, broken tile, infiltration and any other items pertinent to the evaluation of the sewer line.

I. After completion of each section of the sewer inspection, the Contractor shall furnish to the Westfield Public Works Department a computerized report. This report will be generated by an onboard computer and printer and will provide commentary on fault areas. The report will also describe all other pertinent findings regarding service connections, breaks or cracks in pipes, bellies or sags, infiltration, and other items of interest.

PART 3 - EXECUTION

Not Used

END OF SECTION 02750

ELEMENTS
Engineering, LLC
6213 Behner Way
Indianapolis, IN 46250
(317) 490-7054

THE ANDERSON CORPORATION
301 S. UNION STREET
WESTFIELD, IN 46074

NORTHWALK RESIDENTIAL COMMUNITY
740 N. UNION STREET
WESTFIELD, IN 46074

CITY OF WESTFIELD SPECIFICATIONS CAN BE FOUND AT: http://www.westfield.in.gov/egov/apps/document/center.egov?view=item;id=50

CITY OF WESTFIELD
SPECIFICATIONS

DATE:

DWN BY:	CC
CHKD. BY:	JR
SCALE:	N/A
DATE:	4/4/2014

PROJECT NUMBER
13-76-001

DESIGN PHASE
PLAN REVIEW

PLAN NUMBER
C008

SITE LAYOUT NOTES:

1. ALL CONSTRUCTION METHODS AND MATERIALS MUST CONFORM TO CURRENT STANDARDS AND SPECIFICATIONS OF THE FEDERAL, STATE, COUNTY, CITY OR LOCAL REQUIREMENTS, WHICHEVER HAS JURISDICTION.
2. INFORMATION ON DETAIL DRAWINGS TAKES PRIORITY OVER ALL GENERAL DRAWINGS AND SCHEDULES. CONFLICTS SHALL BE BROUGHT TO THE ATTENTION OF THE ENGINEER FOR RESOLUTION.
3. THE CONTRACTOR SHALL VERIFY ALL DIMENSIONS AND ELEVATIONS IN THE FIELD PRIOR TO THE START OF CONSTRUCTION. THE CONTRACTOR SHALL BE RESPONSIBLE FOR ALL FIELD DIMENSIONS AND ELEVATIONS DURING THE ENTIRE CONSTRUCTION SCHEDULE. IF ANY DISCREPANCIES ARE FOUND IN THESE ENGINEERING PLANS FROM ACTUAL FIELD DIMENSIONS, THE CONTRACTOR SHALL CONTACT THE ENGINEER IMMEDIATELY.
4. ALL DIMENSIONS ARE TO EDGE OF PAVEMENT OR FACE OF CURB WHERE APPLICABLE. ALL BUILDING DIMENSIONS ARE TO OUTSIDE FACE OF BRICK OR FACING MATERIAL, WHERE APPLICABLE.
5. ALL RADII INDICATED SHALL BE CONSTRUCTED AS CIRCULAR ARCS.
6. ALL RADII FOR PAVED AREAS AND FACE OF CURBS SHALL BE 5' UNLESS NOTED OTHERWISE.
7. ALL DIMENSIONS ARE PARALLEL AND PERPENDICULAR TO BASE LINES, PROPERTY LINES OR BUILDING LINES UNLESS OTHERWISE NOTED.
8. PROVIDE SMOOTH TRANSITION FROM NEWLY PAVED AREAS TO EXISTING AREAS AS NECESSARY. IN LOCATIONS WHERE PROPOSED PAVEMENT MEETS EXISTING PAVEMENT, THE EXISTING EDGE OF OF PAVEMENT SHALL BE FREE OF ALL LOOSE DEBRIS. THE EDGE OF EXISTING ASPHALT PAVEMENT SHALL BE PROPERLY SEALED WITH A TACK COAT MATERIAL IN ALL AREAS WHERE NEW ASPHALT PAVEMENT IS INDICATED TO JOIN EXISTING.
9. AFTER CONSTRUCTION WORK IS COMPLETE IT IS THE CONTRACTOR'S RESPONSIBILITY TO RESURFACE OR RECONSTRUCT AT LEAST TO ORIGINAL CONDITONS ALL AREAS WHERE TRAFFIC BY CONTRACTORS, SUBCONTRACTORS OR SUPPLIERS HAVE DAMAGED EXISTING PAVEMENT, LAWNS OR OTHER IMPROVEMENTS DURING CONSTRUCTION.
10. ALL UTILITY TRENCHES WITHIN 5 FEET OF PAVEMENT SHALL BE COMPLETELY BACKFILLED WITH GRANULAR BACKFILL.
11. ALL EXCAVATED AREAS TO BE SEEDED AND/OR SODDED AFTER FINISH GRADING UNLESS OTHERWISE NOTED. ALL NEWLY SEEDED/SODDED AREAS SHALL HAVE A MINIMUM OF 4" OF TOPSOIL. HOLD SOIL DOWN 1" FROM PAVEMENT ELEVATION. CONTRACTOR TO SUPPLY STRAW MULCH WHERE GRASS SEED HAS BEEN PLANTED.
12. THESE SITE LAYOUT NOTES SHALL APPLY FOR THE ENTIRE SET OF PLANS REGARDLESS OF THE PARTICULAR PLAN SHEET ON WHICH THEY APPEAR.
13. REFER TO CITY OF WESTFIELD DESIGN AND CONSTRUCTION STANDARDS FOR SPECIFICIATIONS FOR CONSTRUCTION.
(SEE WEBSITE: http://www.westfield.in.gov/egov/apps/document/center.egov?view=item;id=50&fDD=-0)
14. ALL EXISTING PEDESTRIAN AND VEHICULAR TRAFFIC PATTERNS SHALL BE MAINTAINED DURING CONSTRUCTION. IT SHALL BE THE RESPONSIBILITY OF THE CONTRACTOR TO ENSURE SAFE ACCESS TO, FROM, AND AROUND THE SITE EXITS DURING CONSTRUCTION.
15. ALL EXISTING AND NEW POWER POLES AND UTILITY PEDESTALS SHALL BE MOVED OUTSIDE OF THE RIGHT OF WAY PER CITY OF WESTFIELD CONSTRUCTION STANDARDS SECTION 02501.

SITE DEMOLITION NOTES:

1. SEE DEMOLITION PLAN PROVIDED BY OWNER.
2. DEMOLITION SHALL AT ALL TIMES BE BE UNDER SUPERVISION OF QUALIFIED DEMOLITION PERSONNEL SO EMPLOYED BY THE CONTRACTOR.
3. DEMOLITION ITEMS SHALL INCLUDE: UTILITY DISCONNECTIONS AND REMOVAL OF EXISTING BUILDINGS, PIPING, DRAINAGE STRUCTURES, FENCING, POLES, CONCRETE, PAVEMENT AND CAPPING WATER WELLS.
4. AS IT PERTAINS TO DEMOLITION WORK, CONTRACTOR SHALL SECURE ALL PERMITS AND PAY ALL FEES REQUIRED BY THE UTILITY COMPANIES, LOCAL AND/OR STATE AUTHORITIES.
5. CONTRACTOR SHALL PROVIDE WRITTEN STATEMENT FROM UTILITY COMPANIES INDICATING THAT POWER AND GAS HAVE BEEN TURNED OFF, DISCONNECTED, OR DO NOT EXIST ON PROPERTY.
6. CONTRACTOR TO PROVIDE AS-BUILT PLANS WHICH TIE IN UTILITY DISCONNECTION POINTS, ALL REMOVALS AND DEMOLITIONS.
7. THE CONTRACTOR SHALL NOT PERMIT OR ALLOW DEBRIS OR WASTE MATERIAL TO BE BURNED ON THE SITE, AND SHALL USE EVERY PRECAUTION TO ELIMINATE CONDITIONS WHICH MIGHT CAUSE SPONTANEOUS COMBUSTION OR OTHER FIRES.
8. CONTRACTOR SHALL IN ALL CIRCUMSTANCES EMPLOY SAFE AND WORKMANLIKE METHODS TO PROTECT LIFE AND PROPERTY. SAFETY PROVISIONS OF APPLICABLE LAWS SHALL BE OBSERVED BY THE CONTRACTOR AT ALL TIMES. UNDER NO CIRCUMSTANCES WILL THE USE OF EXPLOSIVES BE ALLOWED IN ANY PHASE OF DEMOLITION OPERATION.
9. CONTRACTOR SHALL BE ENTIRELY RESPONSIBLE FOR ALL APPARATUS, EQUIPMENT AND APPURTENANCES FURNISHED IN CONNECTION WITH THIS WORK.
10. NO ATTEMPT IS MADE TO STIPULATE EVERY REQUIRED ITEM OF DEMOLITION EITHER ON DRAWINGS OR IN SPECIFICATIONS. THE CONTRACTOR MUST VISIT AND STUDY PHYSICAL CONDITIONS AT SITE, REVIEW DRAWINGS, AND REACH THEIR OWN CONCLUSIONS ON WORK NECESSARY TO ACCOMPLISH INTENDED RESULT DESCRIBED BY DRAWINGS AND SPECIFICATIONS.
11. ITEMS TO BE DEMOLISHED SHALL BE REMOVED AND LEGALLY DISPOSED OF OFF-SITE. NO ON-SITE BURNING IS ALLOWED. NO DEBRIS SHALL BE LEFT ON SITE OR IN FILLS.
12. CONTRACTOR SHALL BE LIABLE FOR DAMAGE CAUSED TO STREETS, SIDEWALKS, OTHER STRUCTURES, AND ADJACENT AREAS CAUSED BY DEMOLITION OR HAULING OPERATIONS.

GRADING NOTES:

1. ALL CONSTRUCTION METHODS AND MATERIALS MUST CONFORM TO CURRENT STANDARDS AND SPECIFICATIONS OF THE FEDERAL, STATE, COUNTY, CITY OR LOCAL REQUIREMENTS, WHICHEVER HAS JURISDICTION.
2. INFORMATION ON DETAIL DRAWINGS TAKES PRIORITY OVER ALL GENERAL DRAWINGS AND SCHEDULES. CONFLICTS SHALL BE BROUGHT TO THE ATTENTION OF THE ENGINEER FOR RESOLUTION.
3. THE CONTRACTOR SHALL VERIFY ALL DIMENSIONS AND ELEVATIONS IN THE FIELD PRIOR TO THE START OF CONSTRUCTION. THE CONTRACTOR SHALL BE RESPONSIBLE FOR ALL FIELD DIMENSIONS AND ELEVATIONS DURING THE ENTIRE CONSTRUCTION SCHEDULE. IF ANY DISCREPANCIES ARE FOUND IN THESE ENGINEERING PLANS FROM ACTUAL FIELD DIMENSIONS, THE CONTRACTOR SHALL CONTACT THE ENGINEER IMMEDIATELY.
4. THE CONTRACTOR SHALL NOTIFY ALL UTILITY COMPANIES 72 HOURS BEFORE CONSTRUCTION IS TO START TO VERIFY IF ANY UTILITIES ARE PRESENT ON SITE. ALL VERIFICATIONS (LOCATION, SIZE AND DEPTH) SHALL BE MADE BY THE APPROPRIATE UTILITY COMPANIES. WHEN LOCATION OF EXCAVATION WORK IS NEAR OR AT EXISTING UTILITY LOCATION, THE CONTRACTOR MUST NOTIFY THE UTILITY COMPANY SO A REPRESENTATIVE OF THAT UTILITY COMPANY MAY BE PRESENT TO INSTRUCT AND OBSERVE DURING CONSTRUCTION.
5. THE EXCAVATING CONTRACTOR MUST TAKE PARTICULAR CARE WHEN EXCAVATING IN AND AROUND EXISTING UTILITY LINES AND EQUIPMENT. VERIFY COVER REQUIREMENTS BY UTILITY CONTRACTORS AND/OR UTILITY COMPANIES TO AVOID CAUSING DAMAGE TO UTILITIES.
6. THE EXCAVATING CONTRACTOR MUST TAKE PARTICULAR CARE WHILE EXCAVATING AROUND EXISTING TREES SO THAT TREES THAT ARE TO REMAIN ARE NOT DISTURBED AND ROOT SYSTEMS ARE NOT DAMAGED.
7. AFTER STRIPPING TOPSOIL MATERIAL, PROOFROLL WITH A MEDIUM WEIGHT ROLLER TO DETERMINE LOCATIONS OF ANY POCKETS OF UNSUITABLE MATERIAL. THE NECESSITY FOR SUBDRAINS AND/OR REMOVAL OF ANY UNSUITABLE MATERIAL WITHIN THE PROPOSED PARKING AREAS WILL BE DETERMINED AT THE TIME OF CONSTRUCTION.
8. TRENCHES FOR ALL STORM DRAIN LINES WITHIN 5 FEET OF PAVEMENT SHALL BE BACKFILLED COMPLETELY WITH ENGINEERED GRANULAR MATERIAL.
9. PROVIDE POSITIVE DRAINAGE IN ALL AREAS. PAVING CONTRACTOR SHALL TEST FOR ANY PONDING CONDITIONS AFTER INSTALLATION AND CORRECT.
10. ALL EXCAVATED AREAS TO BE SEEDED AND/OR SODDED AFTER FINISH GRADING UNLESS OTHERWISE NOTED. ALL NEWLY SEEDED/SODDED AREAS SHALL HAVE A MINIMUM OF 4" OF TOPSOIL. HOLD SOIL DOWN 1" FROM PAVEMENT ELEVATION. CONTRACTOR TO SUPPLY STRAW MULCH WHERE GRASS SEED HAS BEEN PLANTED.
11. AFTER CONSTRUCTION WORK IS COMPLETE IT IS THE CONTRACTOR'S RESPONSIBILITY TO RESURFACE OR RECONSTRUCT AT LEAST TO ORIGINAL CONDITONS ALL AREAS WHERE TRAFFIC BY CONTRACTORS, SUBCONTRACTORS OR SUPPLIERS HAVE DAMAGED EXISTING PAVEMENT, LAWNS OR OTHER IMPROVEMENTS DURING CONSTRUCTION.
12. ALL PROPOSED SPOT ELEVATIONS ARE THE FINAL PAVEMENT AND FINAL GRADE ELEVATIONS.
13. SEE THIS SHEET FOR LOCATION OF ELEVATIONS PERTAINING TO CURBS AND STORM STRUCTURES.
14. FLOW LINE ELEVATIONS ARE GIVEN AT THE END OF THE PIPE END SECTION.
15. SEE APPROPRIATE DETAILS TO DETERMINE SUBGRADE ELEVATIONS BELOW THE FINISH GRADE ELEVATIONS INDICATED.
16. ALL STORM STRUCTURES TO UTILIZE UNDERDRAINS. SEE DETAIL SHEETS FOR LOCATION, LENGTH AND DIAMETER.
17. CONTRACTOR TO VERIFY EXISTING SURVEY PRIOR TO CONSTRUCTION. CONTRACTOR TO VERIFY EXISTING GRADES TO WHICH THE PROPOSED RETAINING WALLS AT THE SOUTHEAST CORNER OF THE PROJECT WILL CONNECT. CONTRACTOR TO NOTIFY ENGINEER IF EXISTING GRADES DO NOT MATCH THOSE SHOWN.
18. THESE GRADING NOTES SHALL APPLY FOR THE ENTIRE SET OF PLANS REGARDLESS OF THE PARTICULAR PLAN SHEET ON WHICH THEY APPEAR.

WATER GENERAL NOTES:

1. ALL FIRE HYDRANTS TO BE PAINTED, BEFORE DELIVERY AND AFTER INSTALLATION, WITH 2 COATS OF FIRE PROTECTION RED (F63RL15) FOR MUELLER AND (M4104) FOR WATEROUS.
2. FIRE HYDRANTS TO HAVE 5" STORZ'S CONNECTION (MUELLER MODEL 290220 FOR CASTING AND 290221 CAP OR COMPARABLE TO AND APPROVED BY WPWD). HYDRANTS SHALL BE PLACED PER DIRECTION OF WFD.
3. POSI CAPS WILL BE INSTALLED ON ALL VALVES.
4. MAIN SHALL BE SADDLE TAPPED AND BEDDED WITH SAND 6 INCHES UNDER AND 12 INCHES OVER THE PIPE WITH MARKING TAPE INSTALLED 2' ABOVE THE MAIN.
5. NUMBER TWELVE (#12) GAUGE LOCATING WIRE SHALL BE TAPED TO THE TOP OF THE MAIN AND PULLED THROUGH ALL VALVE BOXES (TO THE SURFACE) FOR LOCATING PURPOSES. IF DUCTILE IRON PIPE IS USED, THE MAIN MUST BE POLY WRAPPED AND MARKING TAPE INSTALLED 2' ABOVE THE WATER MAIN.
6. ALL WATERMAIN SHALL BE INSTALLED WITH A MIN. OF 8'-0" OF SEPARATION BETWEEN THE MAIN AND SEWER STRUCTURES AND A MIN. OF 10'-0" OF SEPARATION BETWEEN WATER SANITARY AND STORM PIPE.
7. THERE IS TO BE NO WATER VALVES OR MANHOLES WITHIN THE PAVEMENT, CURBS, SIDEWALKS, OR TRAILS.
8. ALL SERVICE LINES TO BE STUBBED A MIN. OF 2' BEHIND THE SIDEWALK.
9. ALL MAIN AND LATERAL ROAD CROSSINGS TO BE FULL DEPTH GRANULAR BACKFILL.
10. FIRE HYDRANTS ARE DIAGAMMATIC AS TO LOCATION RELATIVE TO WALK AND PROPERTY LINES. FIRE HYDRANTS SHALL BE INSTALLED BETWEEN SIDEWALK AND CURB SO AS TO NOT INTERFERE WITH WALK AND TO PROVIDE A MINIMUM OF 18" CLEARANCE FROM BACK OF CURB. SEE DETAILS. ALL 2" SERVICES TO BE POLY WITH NUMBER TWELVE (#12) GAUGE LOCATING WIRE TAPED TO THE TOP OF THE PIPE.
11. ALL MATERIALS AND WORKMANSHIP SHALL MEET THE LATEST STANDARDS AND SPECIFICATIONS OF THE TOWN OF ZIONSVILLE PER THE CITIZENS WATER MAIN STANDARDS AND REQUIREMENTS.WATER TO BE SUPPLIED BY CITIZENS WATER.
12. ALL PIPE SHALL BE LAID ON A SUITABLE FOUNDATION. WHEN UNSUITABLE SUBGRADE IS ENCOUNTERED, ADDITIONAL TRENCH DEPTH SHALL BE EXCAVATED AND REFILLED WITH SUITABLE FOUNDATION MATERIAL. LEDGE ROCK, BOULDERS AND LARGE STONES SHALL BE REMOVED TO PROVIDE SIX INCHES OF SAND BEDDING ON ALL SIDES OF THE PIPE.
13. ALL BACKFILL SHALL MEET THE CITIZENS WATER STANDARDS AND SPECIFICATIONS.
14. ALL TRENCHES WITHIN PAVED AND/OR TRAFFIC BEARING AREAS SHALL BE BACKFILLED WITH GRANULAR MATERIAL TO A POINT 2' BEYOND THE BACK OF CURB OR TRAFFIC BEARING AREA.
15. ALL BACKFILL SHALL BE PLACED IN MAXIMUM LIFTS OF 6 INCHES AND COMPACTED TO A STANDARD PROCTOR DENSITY OF 95%.
16. ALL WATER MAINS SHALL BE INSTALLED WITH A MINIMUM COVER OF 54 INCHES FROM THE TOP OF PIPE.
17. WHENEVER SEWERS CROSS UNDER WATER MAINS, THE SEWER SHALL BE LAID AT SUCH AN ELEVATION THAT THE TOP OF THE SEWER IS AT LEAST 18 INCHES BELOW THE WATER MAIN. WHEN THE ELEVATION OF THE SEWER CANNOT BE BURIED TO MEET SAID REQUIREMENTS, IT SHALL BE RECONSTRUCTED WITH MECHANICAL JOINT CAST IRON OR DUCTILE IRON WATER GRADE PIPE FOR A DISTANCE OF 10 FEET ON EACH SIDE OF THE WATER MAIN. ONE FULL LENGTH OF WATER MAIN SHOULD BE CENTERED OVER THE SEWER SO THAT BOTH JOINTS WILL BE AS FAR FROM THE SEWER AS POSSIBLE.
18. ALL MAINS MUST BE DISINFECTED ACCORDING TO THE CITIZENS WATER STANDARDS AND AWWA C651-86.
19. WATER MAIN MATERIALS INCLUDING BUT NOT LIMITED TO FIRE HYDRANTS, VALVES SHALL BE INSTALLED PER THE STATE OF INDIANA 327-IAC-8 REQUIREMENTS AND ANY LOCAL REQUIREMENTS.

UTILITY NOTES:

1. THE UTILITIES INDICATED ON THESE PLANS AND ON THE SURVEY ARE BASED ON THE BEST INFORMATION AVAILABLE AND MAY NOT BE A COMPLETE INVENTORY OF ALL OF THE EXISTING UTILITIES PRESENT ON AND AROUND THE SITE. THE LOCATION AND SIZE OF THESE UTILITES MAY BE APPROXIMATE. THE ENGINEER SHALL NOT BE HELD LIABLE FOR ANY INACCURATE UTILITY INFORMATION INDICATED, IMPLIED, OR NOT INDICATED ON THESE PLANS.
2. IT SHALL BE THE CONTRACTOR'S RESPONSIBILITY TO VERIFY THE UTILITY SIZE AND LOCATION PRIOR TO CONSTRUCTION. IF ANY DEVIATION IS FOUND IN THE EXISTING UTILITY SIZE OR LOCATION THE CONTRACTOR SHALL NOTIFY THE ENGINEER IMMEDIATELY.
3. THE CONTRACTOR SHALL VERIFY ALL DIMENSIONS AND ELEVATIONS IN THE FIELD PRIOR TO THE START OF CONSTRUCTION. THE CONTRACTOR SHALL BE RESPONSIBLE FOR ALL FIELD DIMENSIONS AND ELEVATIONS DURING THE ENTIRE CONSTRUCTION SCHEDULE. IF ANY DISCREPANCIES ARE FOUND IN THESE ENGINEERING PLANS FROM ACTUAL FIELD DIMENSIONS, THE CONTRACTOR SHALL CONTACT THE ENGINEER IMMEDIATELY.
4. IT SHALL BE THE CONTRACTOR'S RESPONSIBILITY TO LOCATE AND MAINTAIN IN SERVICE ALL EXISTING UTILITIES ENCOUNTERED DURING CONSTRUCTION UNLESS OTHERWISE INDICATED IN THE PLANS. ANY PIPING WHICH CAN BE REMOVED DURING CONSTRUCTION WITHOUT UNDUE INTERRUPTION OF SERVICE MAY BE REMOVED AND REPLACED BY THE CONTRACTOR, AT HIS EXPENSE WITH THE PERMISSION OF THE OWNER.
5. PRIOR TO WORKING WITH OR NEAR EXISTING UTILITIES, THE APPLICABLE UTILITY COMPANY SHALL BE CONTACTED BY THE CONTRACTOR.
6. FOR CLARITY OF THESE PLANS, PIPES MAY NOT BE DRAWN TO SCALE OR EXACTLY LOCATED.
7. WHEN CONNECTIONS ARE TO BE MADE TO EXISTING PIPING AND STRUCTURES OR WHERE CONSTRUCTION IS IN THE VICINITY OF EXISTING PIPING, THE LOCATION AND ELEVATION OF THE EXISTING PIPING SHALL BE FIELD VERIFIED AND NOTIFICATION GIVEN TO THE OWNER IF THE EXISTING PIPING IS FOUND TO BE DIFFERENT THAN THAT SHOWN ON THE DRAWINGS.
8. ALL UTILITY TRENCHES WITHIN 5 FEET OF PAVEMENT SHALL BE COMPLETELY BACKFILLED WITH GRANULAR BACKFILL.
9. A MINIMUM OF 18 INCHES OF VERTICAL CLEARANCE SHALL BE PROVIDED BETWEEN NEW WATER AND SANITARY SEWER LINES. IF 18 INCHES OF CLEARANCE IS NOT PROVIDED THEN THE SEWER MUST BE CONSTRUCTED OF WATER WORKS GRADE DUCTILE IRON PIPE WITH MECHANICAL JOINTS OR PVC (SDR-26) PIPE WITH GASKETTED, COMPRESSION-TYPE JOINTS WITHIN TEN FEET OF THE WATER LINE.
10. NEW 6" SANITARY LATERALS SHALL BE SDR-35 CONFORMING TO ASTM D2241, AND SHALL MEET THE DEFLECTION STANDARDS OF ASTM D3303.
11. IT IS THE RESPONSIBILITY OF THE CONTRACTOR(S) TO OBTAIN ALL FEDERAL, STATE, COUNTY, CITY/TOWN OR OTHER LOCAL PERMITS FOR ANY AND ALL WORK REQUIRED UNLESS OTHERWISE NOTED. THE CONTRACTOR(S) IS/ARE RESPONSIBLE TO PAY FOR ALL REQUIRED PERMITS BY ANY OR ALL AGENCIES MENTIONED ABOVE UNLESS OTHERWISE NOTED IN THE CONTRACT OR SPECIFICATIONS. ALL ASSOCIATED BONDING REQUIREMENTS AND COSTS ARE INCIDENTAL TO THE CONTRACT.
12. ALL CONSTRUCTION METHODS AND MATERIALS MUST CONFORM TO CURRENT STANDARDS AND SPECIFICATIONS OF THE FEDERAL, STATE, COUNTY, CITY OR LOCAL REQUIREMENTS, WHICHEVER HAS JURISDICTION.
13. THESE UTILITY NOTES SHALL APPLY FOR THE ENTIRE SET OF PLANS REGARDLESS OF THE PARTICULAR PLAN SHEET ON WHICH THEY APPEAR.

SANITARY SEWER NOTES:

1. ALL MAIN AND LATERAL ROAD CROSSINGS TO BE FULL DEPTH GRANULAR BACKFILL.
2. MINIMUM SLOPES PER TEN STATE STANDARDS SHALL PREVAIL IN ALL CASES.
3. CONTRACTORS SHALL EXTEND SEWER LATERALS TO A POINT NO LESS THAN 5' AND NO GREATER THAN 7' FROM BUILDING LINE AS SHOWN. A LOCATE WIRE IS TO BE RUN ALONG ENTIRE LENGTH OF ALL LATERALS.
4. CONTRACTOR SHALL INSTALL LATERAL NO GREATER THAN 6' BELOW PAD GRADE AT LATERAL END.
5. MANHOLE STRUCTURES TO BE CONSTRUCTED TO REQUIRE ONE - 4" RISER RING NO MORE, NO LESS TO MEET PLAN T.C. ALL SANITARY SEWER LATERALS SHALL HAVE LOCATE WIRE RUN WHEN INSTALLING.

STORM SEWER NOTES:

1. STRUCTURES DEEPER THAN 4' MUST BE ACCESSIBLE WITH STEPS.
2. DEBRIS GUARD TO BE INSTALLED ON ALL OPEN ENDED INLETS.
3. DEBRIS GUARD TO BE INSTALLED AT POND OUTFALL PIPE.
4. ALL STORM SEWER SHALL BE CLEANED AND TELEVISED AFTER ALL UNDERGROUND UTILITIES ARE INSTALLED.
5. ALL BEEHIVE CASTINGS ON A 2' X 2' BOX SHALL HAVE A SQUARE RISER WITH A ROUND HOLE.
6. ALL SSD TO BE 6" DOUBLE-WALL, SMOOTH BORE PERFORATED PIPE.

UNDERGROUND DETENTION NOTES:

1. UNDERGROUND DETENTION TO BE ACHIEVED BY USING STONE STORAGE, AND IN SOME LOCATIONS, STORMTECH STRUCTURES (OR APPROVED EQUAL).
2. SEE STORMTECH PLANS FOR MORE INFORMATION. SEE DETAIL SHEET FOR STONE STORAGE DETENTION TYPICAL SECTION.
3. STONE STORAGE AREAS TO HAVE 40% VOIDS. WASHED STONE MUST BE USED FOR THESE AREAS TO ENSURE THE PROPER DETENTION STORAGE IS PROVIDED.
4. CONTRACTOR TO PROTECT THE OPEN DETENTION TRENCHES DURING CONSTRUCTION TO PREVENT SEDIMENT FROM ENTERING DETENTION STONE VOIDS.
5. CONTRACTOR TO CONTACT GEOTECHNICAL ENGINEER TO CONFIRM BEARING CAPACITY PRIOR TO PLACEMENT OF FOUNDATION STONE. (SEE GEOTECHNICAL REPORT PROVIDED BY ALT & WITZIG.)
6. BOTTOM OF UNDERGROUND DETENTION AREAS TO BE FLAT UNLESS OTHERWISE NOTED.

UTILITY STATEMENT:

THE UTILITIES INDICATED ON THESE PLANS AND ON THE SURVEY HAVE BEEN LOCATED FROM FIELD SURVEY INFORMATION. THE SURVEYOR/ENGINEER MAKES NO GUARANTEES THAT THE UNDERGROUND UTILITIES COMPRISE ALL SUCH UTILITIES IN THE AREA, EITHER IN-SERVICE OR ABANDONED. THE SURVEYOR DOES CERTIFY THAT THEY ARE LOCATED AS ACCURATELY AS POSSIBLE FROM INFORMATION AVAILABLE. THE SURVEYOR/ENGINEER HAS NOT PHYSICALLY LOCATED THE UNDERGROUND UTILITIES.

811 Know what's below. Call before you dig.

ELEMENTS
Engineering, LLC
6213 Behner Way
Indianapolis, IN 46250
(317) 490-7054

THE ANDERSON CORPORATION
301 S. UNION STREET
WESTFIELD, IN 46074

NORTHWALK RESIDENTIAL COMMUNITY
740 N. UNION STREET
WESTFIELD, IN 46074

GENERAL NOTES

JENNIFER L. ROBERTS REGISTERED PE19900... STATE OF INDIANA PROFESSIONAL ENGINEER
APPROVAL PENDING NOT FOR CONSTRUCTION

DATE:

DWN BY:	CC
CHKD. BY:	JR
SCALE:	N/A
DATE:	5/9/2014

PROJECT NUMBER
13-76-001

DESIGN PHASE
PLAN REVIEW

PLAN NUMBER
C009

ALTA/ACSM LAND TITLE SURVEY

PART OF THE N.W. QUARTER, SECTION 31, TOWNSHIP 19 NORTH, RANGE 4 EAST
WASHINGTON TOWNSHIP, HAMILTON COUNTY, INDIANA

7003 N.W. CORNER, N.W. QUARTER, SECTION 31-T19N-R4E
N 00°30'25" E 56.87'
7002 N.E. CORNER, N.E. QUARTER, SECTION 36-T19N-R3E
N 00°28'22" E 2690.59'
7001 S.W. CORNER, N.W. QUARTER, SECTION 31-T19N-R4E
N 00°53'30" W 25.07'
7000 S.E. CORNER, N.E. QUARTER, SECTION 36-T19N-R3E
S 00°28'22" W 2650.53'

UNION STREET
WEST LINE OF THE NORTHWEST QUARTER SECTION 31-T19N-R4E
APPARENT EAST R/W UNION STREET
22'± ASPHALT PAVEMENT
APPARENT WEST R/W UNION STREET
ASPHALT PATH

75' RDE
75' REGULATED DRAIN EASEMENT 75' RDE
30.00'
40' BL
50' UTILITY EASEMENT

TBM #7007 MAG NAIL SET ELEV=889.07
TBM #7288 SMALL NAIL FOUND ELEV=892.20

ROUND STORM INLET #7600
T.C. = 887.98'
INV. N. 12" RCP = 885.03'
INV. S. 15" RCP = 884.95'
INV. W. 12" RCP = 885.03

ROUND STORM INLET #7603
T.C. = 887.62'
INV. N. 15" RCP = 884.95'
INV. S. 18" RCP = 884.39'
INV. W. 12" RCP = 884.73'

BEEHIVE INLET #7591
T.C. = 887.35'
INV. W. 12" RCP = 882.65'

ROUND STORM INLET #7604
T.C. = 887.31'
INV. N. 18" RCP = 883.46'
INV. S. 18" RCP = 883.31'
INV. W. 12" RCP = (INACCESSIBLE)

SANITARY MANHOLE #7535
T.C. = 889.53'
INV. N. 12" PVC = 879.43'
INV. W. 12" PVC = 879.53'

SANITARY MANHOLE #7505
T.C. = 891.38'
INV. N. 8" PVC = 885.82'
INV. S. 8" PVC = 885.82'

SANITARY MANHOLE #7776
T.C. = 890.34'

SANITARY CLEANOUT #7738
T.C. = 891.13'
INV. S. 8" PVC = 886.08'

ROUND STORM INLET #7506
T.C. = 891.18'
VERTICAL 6" PVC =889.30'

SQUARE STORM INLET #7502
T.C. = 891.74'
INV. NE. 6" PVC =887.73'
INV. S.W. 6" PVC = 887.76

STORM INLET #7780
T.C. = 888.70'

SANITARY MANHOLE #7777
T.C. = 889.48'

12" CMP INV. = 888.65
TOP OF CMP INV. = 888.78
12" CMP INV. = 888.40'
12" CMP INV. = 889.32
12" CMP INV. = 889.45
12" CMP INV. = 888.20
12" CMP INV. = 888.80
12" CMP INV. = 888.20'
12" CMP INV. = 888.98'
12" CMP INV. = 888.86'
12" CMP INV=890.81
12" CMP INV=891.36

EXISTING BUILDING
SHED
BUILDING "RUINS"
OLD GAS OR WATER PIPE
WRAPPED W/ CHAIN
CONC. PAD
BARN 24.6' x 24.6'
BARN 64.5' x 43.6'
CONC.
EXISTING FENCING
PARKING LOT
TERRACOTTA
STONE
ASPHALT
20' ASPHALT
6'± STONE DRIVE

INSTR #200200088952
LOT #15 MAPLE PARK SUBDIVISION PLAT BOOK 2 PAGE 186
SOUTH LINE OF MAPLE PARK SUBDIVISION SECTION ONE RECORDED IN PLAT BOOK 2 PAGE 186
INSTR #2012040981
INSTR #2007060427
INSTR #200100072113
2.65 ACRES±
INSTR #201120176
D.B. 281 PAGE 210

LOT #51 HARVEST MEADOWS SECTION ONE
LOT #52 HARVEST MEADOWS SECTION ONE
LOT #6 WESTFIELD GREEN ESTATES PLAT BOOK 4 PAGE 1
LOT #7 WESTFIELD GREEN ESTATES PLAT BOOK 4 PAGE 1
LOT #8 WESTFIELD GREEN ESTATES PLAT BOOK 4 PAGE 1
LOT #9 WESTFIELD GREEN EST PLAT BOOK 4 PAGE
LOT #5 WESTFIELD GREEN ESTATES PLAT BOOK 4 PAGE 1
LOT #4 WESTFIELD GREEN ESTATES PLAT BOOK 4 PAGE 1
LOT #3 WESTFIELD GREEN ESTATES PLAT BOOK 4 PAGE 1

MAPLE LANE 50' R/W

200 P.O.B.
201 FENCE COR. IS 4.0'± WEST AND 1.0'± SOUTH OF PT #201
202 FENCE COR. IS 4.0'± NORTH OF PT #202
203 FENCE COR. IS 0.7'± NORTH OF PT #203
204 FENCE LINE IS 0.4'± WEST OF PT #204
205 FENCE COR. IS 1.2'± WEST AND 0.3'± NORTH OF PT #205
206 FENCE COR. IS 0.5'± WEST AND 0.6'± NORTH OF PT #206
207 FENCE END IS 5.7' SOUTH AND 1'± WEST OF PT #207
208

N 89°22'38" W 430.00'
S 89°49'08" E 215.18'
S 43°03'25" E 31.46'
S 00°14'08" E 18.28'
S 89°22'38" E 432.93'
N 00°28'22" E 840.42'
N 00°28'22" E 289.99'
BLDG IS 2.1'± NORTH OF LINE
BLDG IS 2.7' NORTH OF LINE

LEGEND

SS	SANITARY SEWER LINE
ST	STORM SEWER LINE
W	UNDERGROUND WATER LINE
OE	OVERHEAD UTILITY
x	EXISTING FENCE
	TELECOMMUNICATIONS WARNING MARKER
	GAS LINE WARNING MARKER
M	SEPTIC TANK MANHOLE
E	ELECTRIC PEDESTAL
G	GAS METER
	FIRE HYDRANT
	WATER VALVE
W	WATER METER
S	SANITARY SEWER MANHOLE
C	CLEANOUT
	SQUARE STORM INLET
	ROUND STORM INLET
M	MISC MANHOLE LID
	END SECTION
T	TELEPHONE PEDESTAL
T	TELEPHONE MANHOLE
	UTILITY POLE
	GUY ANCHOR
	LIGHT POLE
	FLAG POLE
	BM / TBM
P.O.B.	POINT OF BEGINNING
R/W	RIGHT OF WAY
	GAS VALVE
	DECIDUOUS TREE
	CONFER TREE
	SIGN
	MAILBOX
D	STORM MANHOLE

UTILITY NOTE

THIS SURVEY REFLECTS ABOVE GROUND INDICATIONS OF EXISTING UTILITIES. THE SURVEYOR MAKES NO GUARANTEE THAT THE UNDERGROUND UTILITIES SHOWN COMPRISE ALL SUCH IN THE AREA, EITHER IN SERVICE OR ABANDONED. THE SURVEYOR FURTHER DOES NOT WARRANT THAT THE UNDERGROUND UTILITIES SHOWN ARE IN THE EXACT LOCATION INDICATED, ALTHOUGH HE DOES CERTIFY THAT THEY ARE LOCATED AS ACCURATELY AS POSSIBLE FROM THE INFORMATION AVAILABLE. THE SURVEYOR HAS NOT PHYSICALLY LOCATED THE UNDERGROUND UTILITIES.

811 Know what's below. Call before you dig.
Call 811 or 1-800-382-5544 Before You Begin Any Digging Project. Call 48 hours or 2 working days before you dig. It's Fast, It's Easy and It's the Law in the state of Indiana!

THIS SURVEY IS NOT COMPLETE AND/OR VALID WITHOUT BOTH PAGES.

PAGE 1 OF 2

GRAPHIC SCALE
0 15 30 60
SCALE : 1" = 30'

REVISIONS

REV. DATE	BY	DESCRIPTION
12/17/13	MJJ	ADDED ADDITION TOPO AND PIPE INV. PER CLIENTS REQUEST
5/5/2014	KNA	ADDED REGULATED DRAIN EASEMENT

MILLER SURVEYING INC.
948 CONNER STREET
NOBLESVILLE INDIANA 46060
PH. # (317) 773-2644 FAX 773-2694

LOCATION: PART OF THE NORTHWEST QUARTER, SECTION 31, T19N, R4E WASHINGTON TWP., HAMILTON COUNTY, INDIANA	DRAWN BY: MJJ	PREPARED BY: KNA
	SCALE: 1" = 30'	FIELD BOOK: N/A
FIELD WORK COMPLETED: 12/03/13	DATE: 12/05/13	PAGE: N/A
CLIENT: JIM ANDERSON(ANDERSON CORP.)	JOB NUMBER	SURVEY 4 FILE:
DESCRIPTION: ALTA/ACSM LAND TITLE SURVEY	B34918	N/A N/A

ALTA/ACSM LAND TITLE SURVEY

PART OF THE N.W. QUARTER, SECTION 31, TOWNSHIP 19 NORTH, RANGE 4 EAST
WASHINGTON TOWNSHIP, HAMILTON COUNTY, INDIANA

LAND DESCRIPTION

INSTR #200100072113

A PART OF THE WEST HALF OF THE NORTHWEST QUARTER OF SECTION 31, TOWNSHIP 19 NORTH, RANGE 4 EAST, IN HAMILTON COUNTY, INDIANA MORE PARTICULARLY DESCRIBED AS FOLLOWS: BEGINNING 840.02 FEET NORTH 00 DEGREES 00 MINUTES 00 SECONDS (ASSUMED BEARING) OF THE SOUTHWEST CORNER OF THE NORTHWEST QUARTER OF SECTION 31, TOWNSHIP 19 NORTH, RANGE 4 EAST AND ON THE WEST LINE THEREOF; THENCE NORTH 89 DEGREES 42 MINUTES 30 SECONDS EAST 218.18 FEET; THENCE SOUTH 43 DEGREES 31 MINUTES 47 SECONDS EAST 31.46 FEET; THENCE SOUTH 00 DEGREES 42 MINUTES 30 SECONDS EAST 18.28 FEET; THENCE SOUTH 89 DEGREES 51 MINUTES 00 SECONDS EAST AND PARALLEL TO THE NORTH LINE OF BROADVIEW SECTION ONE, A SUBDIVISION IN HAMILTON COUNTY, INDIANA, AS RECORDED IN PLAT BOOK 2, PAGE 245, IN THE OFFICE OF THE HAMILTON COUNTY RECORDER, 192.93 FEET; THENCE NORTH 00 DEGREES 00 MINUTES 00 SECONDS EAST 289.90 FEET; THENCE NORTH 89 DEGREES 51 MINUTES 00 SECONDS WEST 430 FEET TO A POINT ON THE WEST LINE OF SAID QUARTER SECTION; THENCE SOUTH 00 DEGREES 00 MINUTES 00 SECONDS WEST ON AND ALONG SAID WEST LINES 250.53 FEET TO THE PLACE OF BEGINNING.

LEGEND

- SS — SANITARY SEWER LINE
- ST — STORM SEWER LINE
- W — UNDERGROUND WATER LINE
- OE — OVERHEAD UTILITY
- x — EXISTING FENCE
- TELECOMMUNICATIONS WARNING MARKER
- GAS LINE WARNING MARKER
- SEPTIC TANK MANHOLE
- ELECTRIC PEDESTAL
- GAS METER
- FIRE HYDRANT
- WATER VALVE
- WATER METER
- SANITARY SEWER MANHOLE
- CLEANOUT
- SQUARE STORM INLET
- ROUND STORM INLET
- END SECTION
- TELEPHONE PEDESTAL
- TELEPHONE MANHOLE
- UTILITY POLE
- GUY ANCHOR
- LIGHT POLE
- FLAG POLE
- BM / TBM
- P.O.B. — POINT OF BEGINNING
- R/W — RIGHT OF WAY
- GAS VALVE
- DECIDUOUS TREE
- CONFER TREE
- SIGN
- MAILBOX
- STORM MANHOLE

VICINITY MAP

NOT TO SCALE

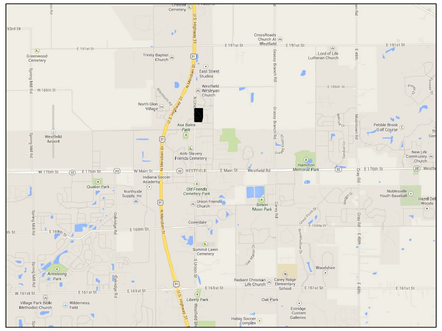

POINT # / REMARKS

POINT #	REMARKS
200, 208	MAG NAIL SET
201, 205, 206, 207, 208	5/8" IRON ROD WITH YELLOW CAP STAMPED "MILLER S0083" SET
202	5/8" IRON ROD WITH YELLOW CAP STAMPED "MILLER S0083" SET 0.4'± WEST AND 1.3'±S SOUTH OF FOUND IRON PIPE
203	5/8" IRON ROD WITH YELLOW CAP STAMPED "MILLER S0083" SET 0.2'± WEST OF FOUND BENT IRON REBAR
204	5/8" IRON ROD WITH YELLOW CAP STAMPED "MILLER S0083" SET 0.1'± WEST AND 0.2'± SOUTH OF FOUND 5/8" REBAR WITH "TNS" CAP
206	5/8" IRON ROD WITH YELLOW CAP STAMPED "MILLER S0083" SET 0.1'± FOUND 5/8" REBAR WITH "TNS" CAP

SURVEYOR'S REPORT

IN ACCORDANCE WITH TITLE 865, ARTICLE 1, CHAPTER 12 OF THE INDIANA ADMINISTRATIVE CODE (RULES FOR LAND SURVEYS IN INDIANA), THE FOLLOWING OBSERVATIONS AND OPINIONS ARE SUBMITTED REGARDING THE VARIOUS UNCERTAINTIES IN THE LOCATIONS OF THE LINES AND CORNERS ESTABLISHED THIS SURVEY AS A RESULT OF UNCERTAINTIES IN REFERENCE MONUMENTATION; IN RECORD DESCRIPTIONS AND PLATS; IN LINES OF OCCUPATION; AND AS INTRODUCED BY RANDOM ERRORS IN MEASUREMENT ("RELATIVE POSITIONAL ACCURACY"). THERE MAY BE UNWRITTEN RIGHTS ASSOCIATED WITH THESE UNCERTAINTIES. THE CLIENT SHOULD ASSUME THERE IS AN AMOUNT OF UNCERTAINTY ALONG ANY LINE EQUAL IN MAGNITUDE TO THE DISCREPANCY IN THE LOCATION OF THE LINES OF POSSESSION FROM THE SURVEYED LINES.

THERE MAY BE DIFFERENCES OF DEED DIMENSIONS VERSUS MEASURED DIMENSIONS ALONG THE BOUNDARY LINES SHOWN HEREON AND LIKEWISE, THERE MAY BE FOUND SURVEY MARKERS NEAR, BUT NOT PRECISELY AT, SOME BOUNDARY CORNERS. IN CASES WHERE THE MAGNITUDE OF THESE DIFFERENCES ARE LESS THAN THE RELATIVE POSITIONAL ACCURACY AND LESS THAN THE UNCERTAINTY IDENTIFIED FOR THE REFERENCE MONUMENTATION (DISCUSSED BELOW), THE DIFFERENCES MAY BE CONSIDERED INSIGNIFICANT AND ARE SHOWN ONLY FOR PURPOSES OF MATHEMATICAL CLOSURE. SUCH DIFFERENCES THAT ARE GREATER THAN THE RELATIVE POSITIONAL ACCURACY AND THE UNCERTAINTY IN REFERENCE MONUMENTATION SHOULD BE CONSIDERED WORTHY OF NOTICE AND ARE THEREFORE DISCUSSED FURTHER BELOW.

THIS SURVEY AND REPORT ARE BASED IN PART UPON OPINIONS FORMED IN ACCORDANCE WITH AN INDIANA LAND SURVEYOR'S RESPONSIBILITY TO CONDUCT A SURVEY IN ACCORDANCE WITH "LAW OR A PRECEDENT" (865 IAC 1-12-11(5), RULES OF THE INDIANA STATE BOARD OF REGISTRATION FOR LAND SURVEYORS). SINCE INDIANA HAS NO STATUTES ADDRESSING HOW TO RESOLVE BOUNDARY LINES, A SOLUTION BASED ON PRINCIPLES DERIVED FROM COMMON LAW PRECEDENT MUST BE RELIED UPON AS THE BASIS FOR A BOUNDARY RESOLUTION. UNLESS OTHERWISE NOTED OR DEPICTED HEREON, THERE IS NO EVIDENCE OF OCCUPATION ALONG THE PERIMETER LINES OF THE SUBJECT TRACT. ALL SURVEY MONUMENTS SET OR FOUND THIS SURVEY ARE FLUSH WITH EXISTING GRADE UNLESS OTHERWISE NOTED.

THE RELATIVE POSITIONAL ACCURACY (DUE TO RANDOM ERRORS IN MEASUREMENT) OF THE CORNERS OF THE SUBJECT TRACT ESTABLISHED THIS SURVEY DOES NOT EXCEED THAT ALLOWABLE FOR A SUBURBAN CLASS SURVEY (0.13 FEET PLUS 100 PPM) AS DEFINED IN IAC 865.

THE WITHIN SURVEY IS AN ALTA/ACSM LAND TITLE SURVEY OF A TRACT OF REAL ESTATE DESCRIBED IN INSTRUMENT #200100072113.

BASIS OF BEARING: (ASSUMED BEARING)

CONTROLLING MONUMENTS:

7000 — S.E. CORNER, N.E. 1/4, SECTION 36-T19N-R3E
HARRISON MARKER FOUND 0.1'± BELOW SURFACE (PER CO. SURVEYOR REFERENCE)

7001 — S.W. CORNER, N.W. 1/4 SECTION 31-T19N-R4E
BRASS PLUG FOUND (PER CO. SURVEYOR REFERENCE)

7002 — N.E. CORNER, N.E. 1/4, SECTION 36-T19N-R3E
RAILROAD SPIKE FD. 0.4'± BELOW SURFACE (PER CO. SURVEYOR REFERENCE)

7003 — N.W. CORNER, N.W. 1/4 SECTION 31-T19N-R4E
RAILROAD SPIKE FD. 0.4'± BELOW SURFACE (PER CO. SURVEYOR REFERENCE)

IN MY OPINION, THERE IS 0.5 FEET OF UNCERTAINTY IN THE LOCATION OF THESE MONUMENTS.

1. POSSESSION TO THE WEST IS TO THE STREET IMPROVEMENTS OF UNION STREET. POSSESSION TO THE NORTH, SOUTH AND EAST IS TO EXISTING FENCING.

2. THE ACCURACY OF ANY FLOOD HAZARD DATA SHOWN ON THIS REPORT IS SUBJECT TO MAP SCALE UNCERTAINTY AND TO ANY OTHER UNCERTAINTY IN LOCATION OR ELEVATION ON THE REFERENCED FLOOD INSURANCE RATE MAP. THE WITHIN DESCRIBED TRACT OF LAND LIES WITHIN ZONE "X" AS SAID TRACT PLOTS BY SCALE ON COMMUNITY PANEL NUMBER 18057C0120F OF THE FLOOD INSURANCE RATE MAPS FOR HAMILTON COUNTY, INDIANA (MAPS DATED FEBRUARY 19, 2003)

ZONE	EXPLANATION
"X"	AREAS DETERMINED TO BE OUTSIDE 500-YEAR FLOODPLAIN.

THE SUBJECT PROPERTY IS NOT LOCATED IN A SPECIAL FLOOD HAZARD AREA AS ESTABLISHED BY THE FEDERAL EMERGENCY MANAGEMENT AGENCY NATIONAL FLOOD INSURANCE PROGRAM AS PER SCALED INTERPRETATION OF FLOOD RATE MAP #18057C0120F. AREA IN ZONE "X" MAP DATED FEBRUARY 19, 2003

3. OWNERSHIP INFORMATION INDICATED HEREON IS AS IDENTIFIED IN COUNTY RECORDS.

4. THE SURVEY HEREIN DOES NOT PURPORT TO SHOW THE WATERSHED AREAS AFFECTING THE SUBJECT PARCELS NOR DOES IT PURPORT TO SHOW THE PRESENCE OR ABSENCE OF ALL REGULATED OR NON-REGULATED DITCHES OR DRAINS.

5. THE WITHIN PLAT AND SURVEY WERE PREPARED WITHOUT BENEFIT OF A CURRENT TITLE POLICY FOR THE SUBJECT TRACT OR THE ADJOINING TRACTS AND ARE THEREFORE SUBJECT TO ANY STATEMENT OF FACTS REVEALED BY EXAMINATION OF SUCH DOCUMENTS.

I AFFIRM, UNDER THE PENALTIES FOR PERJURY, THAT I HAVE TAKEN REASONABLE CARE TO REDACT EACH SOCIAL SECURITY NUMBER IN THE DOCUMENT, UNLESS REQUIRED BY LAW (KEITH NATHAN ALTHOUSE).

THE WITHIN PLAT AND SURVEY WAS PREPARED WITHOUT THE BENEFIT OF A CURRENT TITLE POLICY AND ARE THEREFORE SUBJECT TO ANY STATEMENT OF FACTS REVEALED BY EXAMINATION OF SCHEDULE "A" AND SCHEDULE "B" OF A TITLE POLICY.

THIS SURVEY PLAT HAS BEEN PREPARED FOR USE ON THIS PARTICULAR PROJECT AND FOR THE EXCLUSIVE USE OF THE PERSON(S) OR ENTITY HEREON NAMED AND IS NOT CERTIFIED TO OR TO BE USED BY ANY OTHER PARTY. THE EVIDENCE, POSSESSION, OWNERSHIP, CONDITIONS ETC. COULD CHANGE CONSTANTLY AND THE USE OF THIS SURVEY IS LIMITED ONLY TO THE DATE INDICATED HEREIN.

THE LOCATION OF THE TITLE LINES AND CORNERS ARE SUBJECT TO THE EVIDENCE FOUND IN THE PERFORMANCE OF THIS SURVEY. ADDITIONAL EVIDENCE PRESENTED TO MILLER SURVEYING, INC. MAY ALTER THE LOCATION OF THE TITLE LINES AND CORNERS.

BENCHMARK INFORMATION

HORIZONTAL AND VERTICAL CONTROL:

COORDINATE SYSTEM:
US STATE PLANE 1983 (AT GROUND)

PROJECT DATUM:
WORLD GEODETIC SYSTEM (WGS 1984)

VERTICAL DATUM
NAVD 88

ZONE:
INDIANA EAST 1301

GEOID MODEL:
GEOID03 (CONUS)

COORDINATE UNITS US SURVEY FEET
DISTANCE UNITS US SURVEY FEET
HEIGHT UNITS US SURVEY FEET

TBM #7007
MAG NAIL SET
ELEV=889.07

TBM #7288
SMALL NAIL FOUND
ELEV=892.20

CERTIFICATION

TO:

THIS IS TO CERTIFY THAT THIS MAP OR PLAT AND THE SURVEY ON WHICH IT IS BASED WERE MADE IN ACCORDANCE WITH THE 2011 MINIMUM STANDARD DETAIL REQUIREMENTS FOR ALTA/ACSM LAND TITLE SURVEYS, JOINTLY ESTABLISHED AND ADOPTED BY ALTA AND NSPS, AND INCLUDES ITEMS 1,2,3,4,7(A),8,9,11(A),AND 13 OF TABLE "A" THEREOF. THE FIELD WORK WAS COMPLETED ON 12/03/13.

DATE: 12/05/13

SIGNED: _____
K. NATHAN ALTHOUSE, PLS
REGISTRATION NO. LS20400007

UTILITY NOTE

THIS SURVEY REFLECTS ABOVE GROUND INDICATIONS OF EXISTING UTILITIES. THE SURVEYOR MAKES NO GUARANTEE THAT THE UNDERGROUND UTILITIES SHOWN COMPRISE ALL SUCH IN THE AREA, EITHER IN SERVICE OR ABANDONED. THE SURVEYOR FURTHER DOES NOT WARRANT THAT THE UNDERGROUND UTILITIES SHOWN ARE IN THE EXACT LOCATION INDICATED, ALTHOUGH HE DOES CERTIFY THAT THEY ARE LOCATED AS ACCURATELY AS POSSIBLE FROM THE INFORMATION AVAILABLE. THE SURVEYOR HAS NOT PHYSICALLY LOCATED THE UNDERGROUND UTILITIES.

811
Know what's below.
Call before you dig.
Call 811 or 1-800-382-5544 Before You Begin Any Digging Project.
Call 48 hours or 2 working days before you dig.
It's Fast, It's Easy and It's the Law in the state of Indiana!

THIS SURVEY IS NOT COMPLETE AND/OR VALID WITHOUT BOTH PAGES.

GRAPHIC SCALE
0 15 30 60
SCALE : 1" = 30'

REVISIONS

REV. DATE	BY	DESCRIPTION
12/17/13	MJJ	ADDED ADDITION TOPO AND PIPE INV. PER CLIENTS REQUEST

MILLER SURVEYING INC.
948 CONNER STREET
NOBLESVILLE INDIANA 46060
PH. # (317) 773-2644 FAX 773-2694

LOCATION: PART OF THE NORTHWEST QUARTER, SECTION 31, T19N, R4E WASHINGTON TWP., HAMILTON COUNTY, INDIANA		DRAWN BY: MJJ	PREPARED BY: KNA
		SCALE: 1" = 30'	FIELD BOOK: N/A
FIELD WORK COMPLETED: 12/03/13		DATE: 12/05/13	PAGE: N/A
CLIENT: JIM ANDERSON(ANDERSON CORP.)		JOB NUMBER	SURVEY 4 FILE:
DESCRIPTION: ALTA/ACSM LAND TITLE SURVEY		B34918	N/A N/A

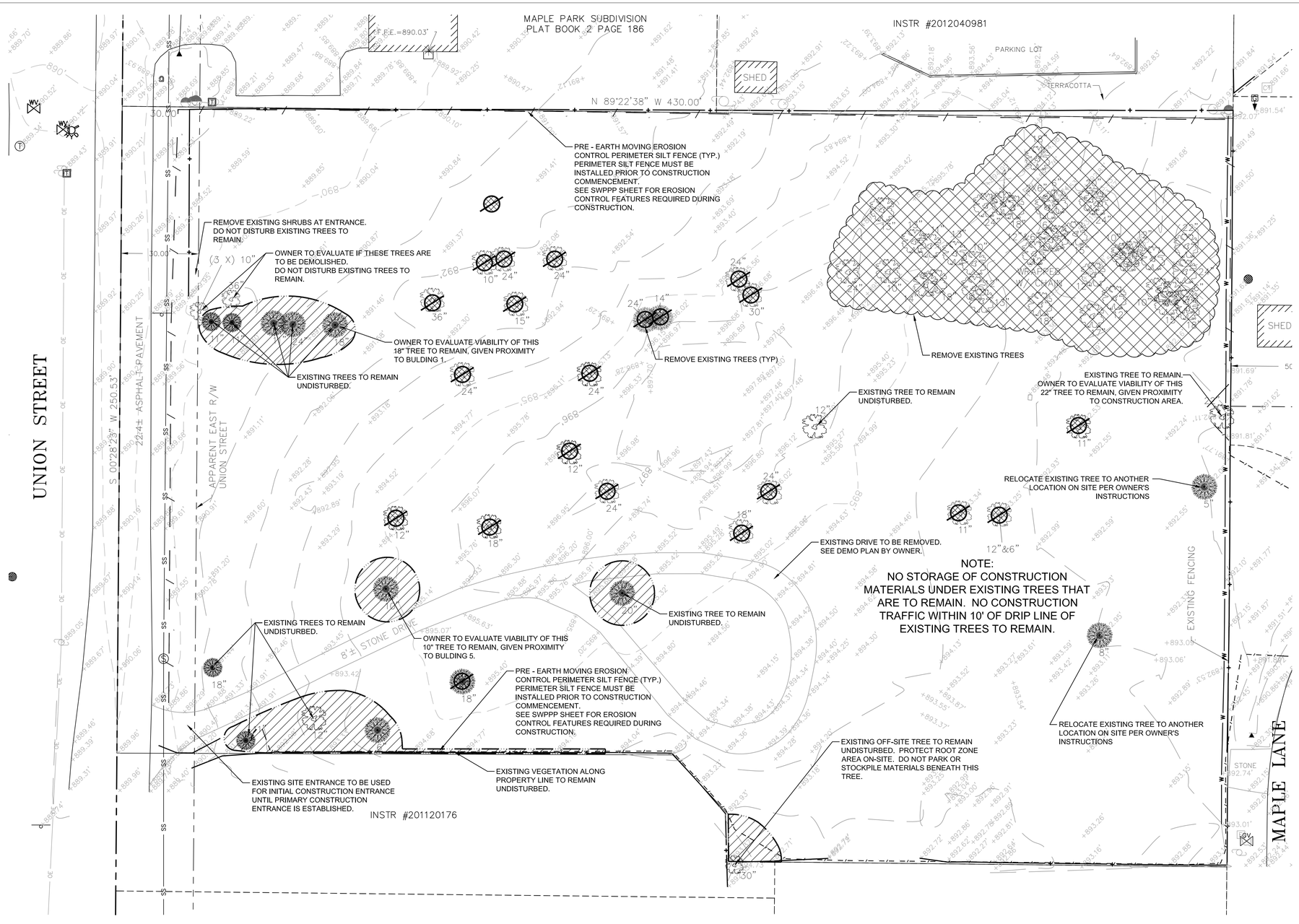

LEGEND:

- GROUPING OF TREES TO BE DEMOLISHED
- TREE TO BE REMOVED
- AREA OF NO CONSTRUCTION (LAND AND TREE PROTECTION ZONE)
- SILT FENCE

TREE PRESERVATION NOTES:

PRESERVATION METHOD:

1. PROVIDE FOR PRESERVATION OF EXISTING VEGETATION PRIOR TO THE COMMENCEMENT OF CLEARING AND GRUBBING OPERATIONS OR OTHER SOIL DISTURBING ACTIVITIES IN AREAS WHERE NO CONSTRUCTION ACTIVITY IS PLANNED OR WILL OCCUR AT A LATER DATE.

2. CONTRACTOR TO CONSTRUCT ORANGE CONSTRUCTION FENCE TEN FEET OUTSIDE DRIPLINE OF TREES WHERE FEASIBLE AND AT MINIMUM AT DRIPLINE OF TREES WITH. POSTS SHALL BE AT 8 FEET ON CENTER.

3. NO MATERIAL OR EQUIPMENT STORAGE, NO SOIL STOCKPILING OR STRIPPING WITHIN TREE PRESERVATION AREA.

4. TEMPORARY IRRIGATION MAY BE NEEDED IF TREES SHOW SIGNS OF STRESS OR DURING SUMMER MONTHS TO MAINTAIN MOISTURE LEVELS.

INSPECTION AND MAINTENANCE:

5. TRENCH AS FAR FROM TREE TRUNKS AS POSSIBLE, OUTSIDE OF THE TREE DRIP LINE OR CANOPY UNLESS OTHERWISE NOTED. CURVE TRENCHES AROUND TREES TO AVOID LARGE ROOTS OR ROOT CONCENTRATIONS. IF ROOTS ARE ENCOUNTERED, CONSIDER TUNNELING UNDER THEM. WHEN TRENCHING OR TUNNELING NEAR OR UNDER TREES TO BE RETAINED, PLACE TUNNELS AT LEAST 18 INCHES BELOW THE GROUND SURFACE. TUNNELS SHALL NOT BE PLACED BELOW THE TREE CENTER TO MINIMIZE IMPACT ON THE ROOTS.

6. DO NOT LEAVE TREE ROOTS EXPOSED TO AIR. COVER EXPOSED ROOTS WITH SOIL AS SOON AS POSSIBLE. IF SOIL COVERING IS NOT PRACTICAL, PROTECT EXPOSED ROOTS WITH WET BURLAP OR PEAT MOSS UNTIL THE TUNNEL OR TRENCH IS READY FOR BACKFILL,

7. FILL TRENCHES AND TUNNELS AS SOON AS POSSIBLE. CAREFUL FILLING AND TAMPING WILL ELIMINATE AIR SPACES IN THE SOIL, WHICH CAN DAMAGE ROOTS.

8. CLEANLY REMOVE THE ENDS OF DAMAGED ROOTS WITH A SMOOTH CUT.

9. AERATE SOIL THAT HAS BEEN COMPACTED OVER A TREE ROOT ZONE BY PUNCHING HOLES 12 INCHES DEEP WITH AN IRON BAR, AND MOVING THE BAR BACK AND FORTH UNTIL THE SOIL IS LOOSENED. PLACE HOLES 18 INCHES APART THROUGHOUT THE AREA OF COMPACTED SOIL UNDER THE TREE CROWN.

FERTILIZATION:

10. FERTILIZE STRESSED OR DAMAGED BROADLEAF TREES TO AID RECOVERY. FERTILIZE TREES IN THE LATE FALL OR EARLY SPRING.

11. APPLY FERTILIZER TO THE SOIL OVER THE FEEDER ROOTS AND IN ACCORDANCE WITH THE LABEL INSTRUCTIONS, BUT NEVER CLOSER THAN 3 FEET TO THE TREE TRUNK. INCREASE THE FERTILIZED AREA BY ONE-FOURTH OF THE CROWN AREA FOR CONIFERS THAT HAVE EXTENDED ROOT SYSTEMS.

DEMOLITION PLAN TO BE PROVIDED BY OWNER.

UTILITY STATEMENT:
THE UTILITIES INDICATED ON THESE PLANS AND ON THE SURVEY HAVE BEEN LOCATED FROM FIELD SURVEY INFORMATION. THE SURVEYOR/ENGINEER MAKES NO GUARANTEES THAT THE UNDERGROUND UTILITIES COMPRISE ALL SUCH UTILITIES IN THE AREA, EITHER IN-SERVICE OR ABANDONED. THE SURVEYOR DOES CERTIFY THAT THEY ARE LOCATED AS ACCURATELY AS POSSIBLE FROM INFORMATION AVAILABLE. THE SURVEYOR/ENGINEER HAS NOT PHYSICALLY LOCATED THE UNDERGROUND UTILITIES.

811 Know what's below. Call before you dig.

ELEMENTS
Engineering, LLC
6213 Behner Way
Indianapolis, IN 46250
(317) 490-7054

THE ANDERSON CORPORATION
301 S. UNION STREET
WESTFIELD, IN 46074

NORTHWALK RESIDENTIAL COMMUNITY
740 N. UNION STREET
WESTFIELD, IN 46074

TREE PRESERVATION & PRE-SWPPP PLAN

JENNIFER L. ROBERTS — 21500010 — REGISTERED LANDSCAPE ARCHITECT — STATE OF INDIANA
APPROVAL PENDING
NOT FOR CONSTRUCTION

DATE:

DWN BY:	CC
CHKD. BY:	JR
SCALE:	AS NOTED
DATE:	5/9/2014

PROJECT NUMBER
13-76-001

DESIGN PHASE
PLAN REVIEW

PLAN NUMBER
C100

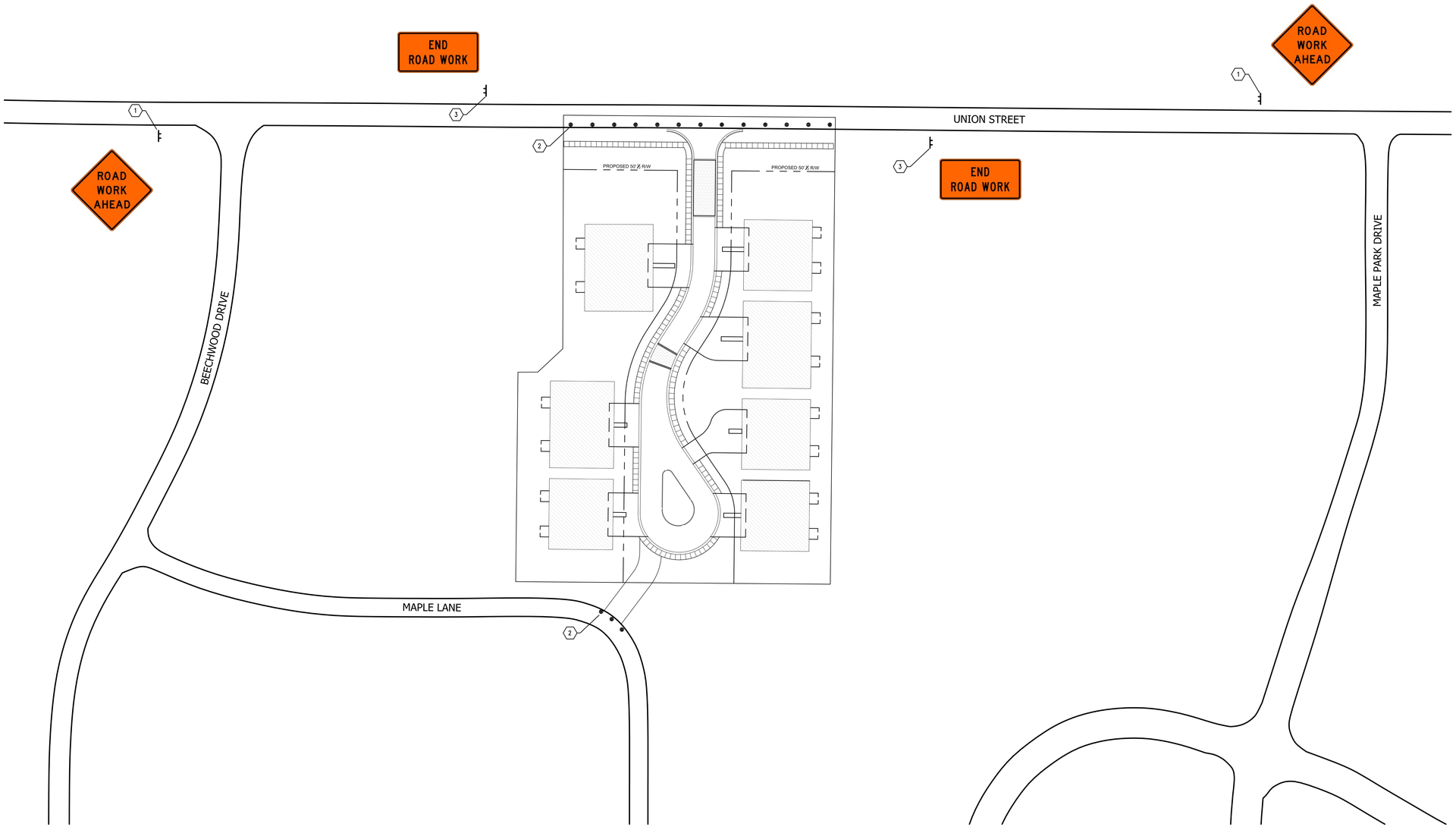

0 50 100 150

1" = 50'

 # TRAFFIC MAINTENANCE SHEET KEYNOTES:

1. PROVIDE AND INSTALL INDOT CONSTRUCTION SIGN, A XW20-1 "ROAD CONSTRUCTION AHEAD".
2. PROVIDE AND INSTALL INDOT STANDARD DRUM AS SHOWN ON PLANS.
3. PROVIDE AND INSTALL INDOT CONSTRUCTION SIGN, A XG20-2 "END CONSTRUCTION"
4. PROVIDE AND INSTALL TEMPORARY PROVISIONS, (FLAG MEN, SIGNAGE, ARROW BOARDS, LAW ENFORCEMENT SUPPORT) AS NEEDED TO COMPLETE CONSTRUCTION. COORDINATE CONSTRUCTION ACTIVITIES WITH THE CITY OF WESTFIELD TO MINIMIZE TRAFFIC DISRUPTION AND COMPLICATIONS. ANY ADDITIONAL MEASURES SPECIFIED OR REQUIRED BY INDOT OR THE CITY OF WESTFIELD SHALL BE PROVIDED BY THE CONTRACTOR IN ORDER TO FACILITATE CONSTRUCTION AND PUBLIC SAFETY.

UTILITY STATEMENT:

THE UTILITIES INDICATED ON THESE PLANS AND ON THE SURVEY HAVE BEEN LOCATED FROM FIELD SURVEY INFORMATION. THE SURVEYOR/ENGINEER MAKES NO GUARANTEES THAT THE UNDERGROUND UTILITIES COMPRISE ALL SUCH UTILITIES IN THE AREA, EITHER IN-SERVICE OR ABANDONED. THE SURVEYOR DOES CERTIFY THAT THEY ARE LOCATED AS ACCURATELY AS POSSIBLE FROM INFORMATION AVAILABLE. THE SURVEYOR/ENGINEER HAS NOT PHYSICALLY LOCATED THE UNDERGROUND UTILITIES.

811 Know what's **below.** **Call** before you dig.

ELEMENTS
Engineering, LLC
6213 Behner Way
Indianapolis, IN 46250
(317) 490-7054

THE ANDERSON CORPORATION
301 S. UNION STREET
WESTFIELD, IN 46074

NORTHWALK RESIDENTIAL COMMUNITY
740 N. UNION STREET
WESTFIELD, IN 46074

TRAFFIC MAINTENANCE PLAN

JENNIFER L. ROBERTS
REGISTERED
LANDSCAPE ARCHITECT
STATE OF INDIANA
LA21900017

APPROVED PENDING
NOT FOR
CONSTRUCTION

DATE:

DWN BY:	CC
CHKD. BY:	JR
SCALE:	AS NOTED
DATE:	4/4/2014

PROJECT NUMBER
13-76-001

DESIGN PHASE
PLAN REVIEW

PLAN NUMBER
C101

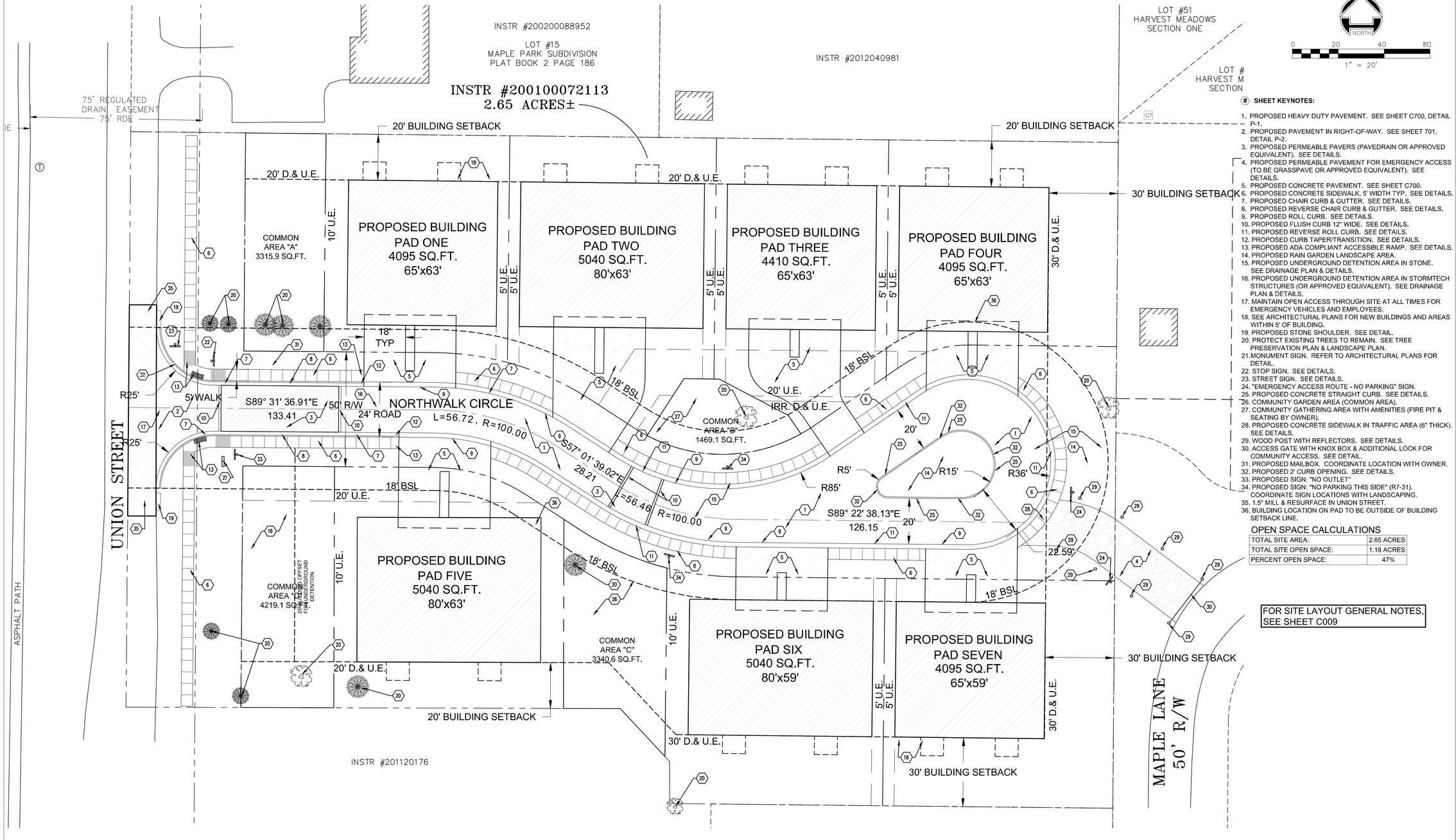

SHEET KEYNOTES:

1. PROPOSED HEAVY DUTY PAVEMENT. SEE SHEET C700, DETAIL P-1.
2. PROPOSED PAVEMENT IN RIGHT-OF-WAY. SEE SHEET 701, DETAIL P-2.
3. PROPOSED PERMEABLE PAVERS (PAVEDRAIN OR APPROVED EQUIVALENT). SEE DETAILS.
4. PROPOSED PERMEABLE PAVEMENT FOR EMERGENCY ACCESS (TO BE GRASSPAVE OR APPROVED EQUIVALENT). SEE DETAILS.
5. PROPOSED CONCRETE PAVEMENT. SEE SHEET C700.
6. PROPOSED CONCRETE SIDEWALK, 5' WIDTH TYP. SEE DETAILS.
7. PROPOSED CHAIR CURB & GUTTER. SEE DETAILS.
8. PROPOSED REVERSE CHAIR CURB & GUTTER. SEE DETAILS.
9. PROPOSED ROLL CURB. SEE DETAILS.
10. PROPOSED FLUSH CURB 12" WIDE. SEE DETAILS.
11. PROPOSED REVERSE ROLL CURB. SEE DETAILS.
12. PROPOSED CURB TAPER/TRANSITION. SEE DETAILS.
13. PROPOSED ADA COMPLIANT ACCESSIBLE RAMP. SEE DETAILS.
14. PROPOSED RAIN GARDEN LANDSCAPE AREA.
15. PROPOSED UNDERGROUND DETENTION AREA IN STONE. SEE DRAINAGE PLAN & DETAILS.
16. PROPOSED UNDERGROUND DETENTION AREA IN STORMTECH STRUCTURES (OR APPROVED EQUIVALENT). SEE DRAINAGE PLAN & DETAILS.
17. MAINTAIN OPEN ACCESS THROUGH SITE AT ALL TIMES FOR EMERGENCY VEHICLES AND EMPLOYEES.
18. SEE ARCHITECTURAL PLANS FOR NEW BUILDINGS AND AREAS WITHIN 5' OF BUILDING.
19. PROPOSED STONE SHOULDER. SEE DETAIL.
20. PROTECT EXISTING TREES TO REMAIN. SEE TREE PRESERVATION PLAN & LANDSCAPE PLAN.
21. MONUMENT SIGN. REFER TO ARCHITECTURAL PLANS FOR DETAIL.
22. STOP SIGN. SEE DETAILS.
23. STREET SIGN. SEE DETAILS.
24. "EMERGENCY ACCESS ROUTE - NO PARKING" SIGN.
25. PROPOSED CONCRETE STRAIGHT CURB. SEE DETAILS.
26. COMMUNITY GARDEN AREA (COMMON AREA).
27. COMMUNITY GATHERING AREA WITH AMENITIES (FIRE PIT & SEATING BY OWNER).
28. PROPOSED CONCRETE SIDEWALK IN TRAFFIC AREA (6" THICK). SEE DETAILS.
29. WOOD POST WITH REFLECTORS. SEE DETAILS.
30. ACCESS GATE WITH KNOX BOX & ADDITIONAL LOCK FOR COMMUNITY ACCESS. SEE DETAIL.
31. PROPOSED MAILBOX. COORDINATE LOCATION WITH OWNER.
32. PROPOSED 2' CURB OPENING. SEE DETAILS.
33. PROPOSED SIGN: "NO OUTLET"
34. PROPOSED SIGN: "NO PARKING THIS SIDE" (R7-31). COORDINATE SIGN LOCATIONS WITH LANDSCAPING.
35. 1.5" MILL & RESURFACE IN UNION STREET.
36. BUILDING LOCATION ON PAD TO BE OUTSIDE OF BUILDING SETBACK LINE.

OPEN SPACE CALCULATIONS

TOTAL SITE AREA:	2.65 ACRES
TOTAL SITE OPEN SPACE:	1.18 ACRES
PERCENT OPEN SPACE:	47%

FOR SITE LAYOUT GENERAL NOTES, SEE SHEET C009

UTILITY STATEMENT:

THE UTILITIES INDICATED ON THESE PLANS AND ON THE SURVEY HAVE BEEN LOCATED FROM FIELD SURVEY INFORMATION. THE SURVEYOR/ENGINEER MAKES NO GUARANTEES THAT THE UNDERGROUND UTILITIES COMPRISE ALL SUCH UTILITIES IN THE AREA, EITHER IN-SERVICE OR ABANDONED. THE SURVEYOR DOES CERTIFY THAT THEY ARE LOCATED AS ACCURATELY AS POSSIBLE FROM INFORMATION AVAILABLE. THE SURVEYOR/ENGINEER HAS NOT PHYSICALLY LOCATED THE UNDERGROUND UTILITIES.

811 Know what's below. Call before you dig.

ELEMENTS
Engineering, LLC
6213 Behner Way
Indianapolis, IN 46250
(317) 490-7054

THE ANDERSON CORPORATION
301 S. UNION STREET
WESTFIELD, IN 46074

NORTHWALK RESIDENTIAL COMMUNITY
740 N. UNION STREET
WESTFIELD, IN 46074

SITE PLAN

JENNIFER L. HAGLING — STATE OF INDIANA — REGISTERED LANDSCAPE ARCHITECT — 20100001 — APPROVAL PENDING — NOT FOR CONSTRUCTION

DATE:

DWN BY:	CC
CHKD. BY:	JR
SCALE:	AS NOTED
DATE:	5/29/2014

PROJECT NUMBER
13-76-001

DESIGN PHASE
PLAN REVIEW

PLAN NUMBER
C200

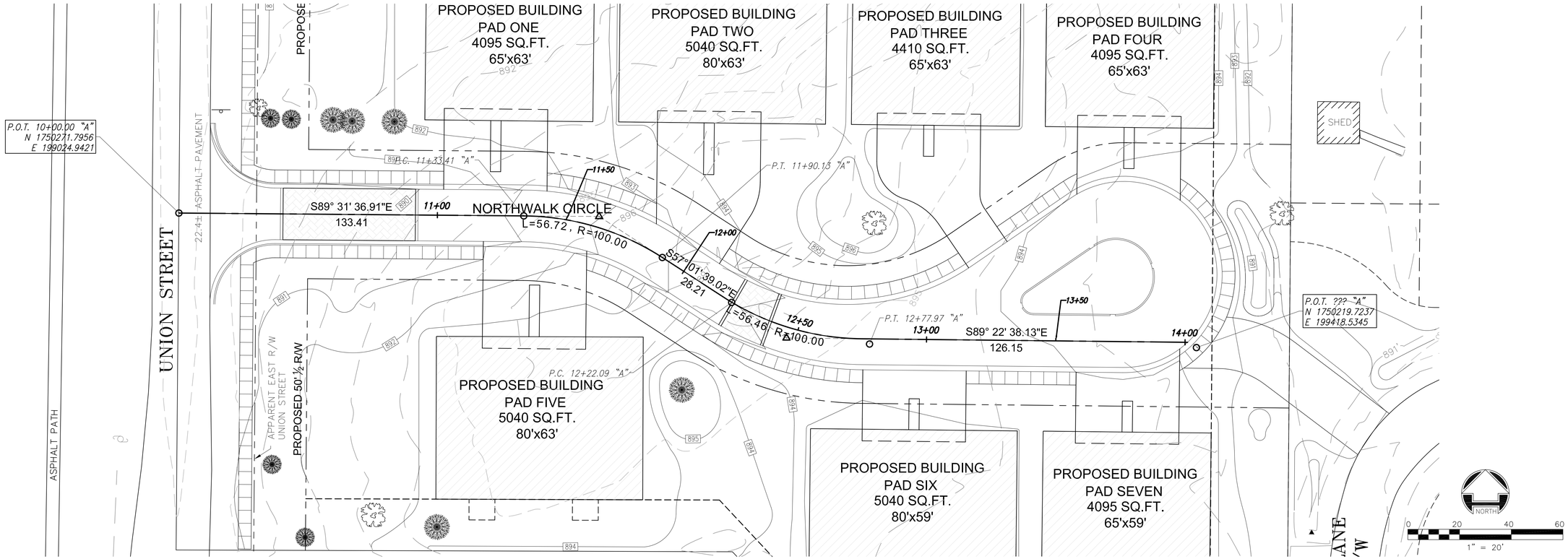

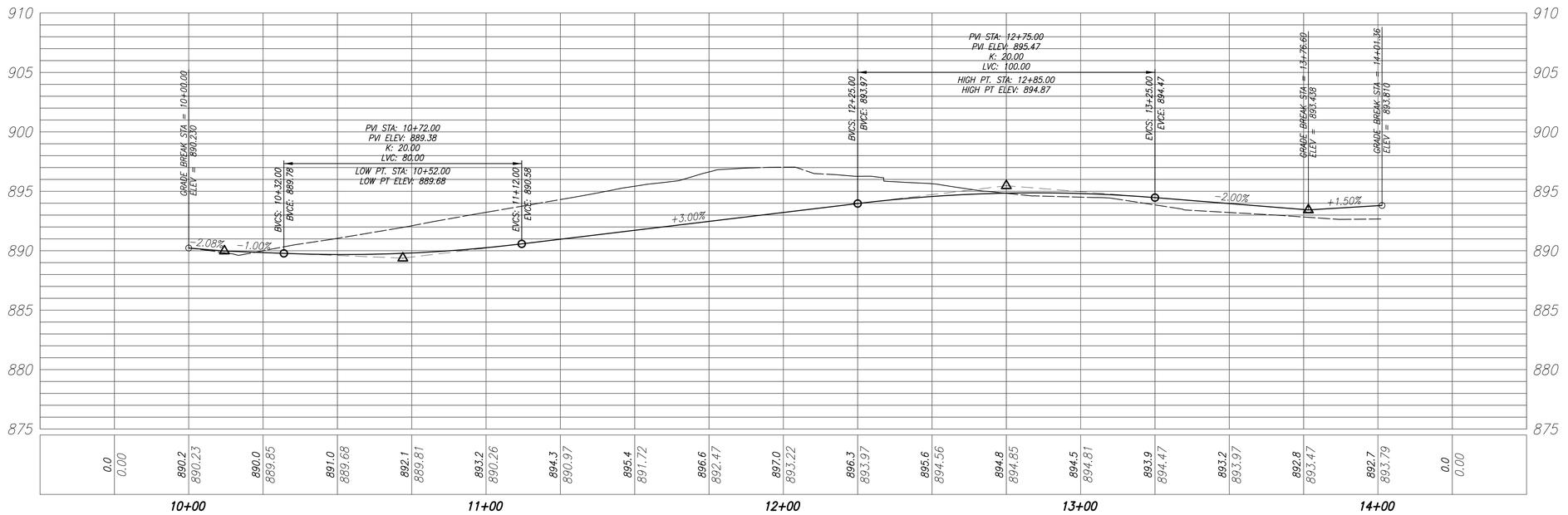

UTILITY STATEMENT:

THE UTILITIES INDICATED ON THESE PLANS AND ON THE SURVEY HAVE BEEN LOCATED FROM FIELD SURVEY INFORMATION. THE SURVEYOR/ENGINEER MAKES NO GUARANTEES THAT THE UNDERGROUND UTILITIES COMPRISE ALL SUCH UTILITIES IN THE AREA, EITHER IN-SERVICE OR ABANDONED. THE SURVEYOR DOES CERTIFY THAT THEY ARE LOCATED AS ACCURATELY AS POSSIBLE FROM INFORMATION AVAILABLE. THE SURVEYOR/ENGINEER HAS NOT PHYSICALLY LOCATED THE UNDERGROUND UTILITIES.

811 Know what's below. Call before you dig.

ELEMENTS
Engineering, LLC
6213 Behner Way
Indianapolis, IN 46250
(317) 490-7054

THE ANDERSON CORPORATION
301 S. UNION STREET
WESTFIELD, IN 46074

NORTHWALK RESIDENTIAL COMMUNITY
740 N. UNION STREET
WESTFIELD, IN 46074

ROADWAY PLAN AND PROFILE

APPROVAL PENDING NOT FOR CONSTRUCTION

DATE:

DWN BY:	CC
CHKD. BY:	JR
SCALE:	AS NOTED
DATE:	4/4/2014

PROJECT NUMBER
13-76-001

DESIGN PHASE
PLAN REVIEW

PLAN NUMBER
C201

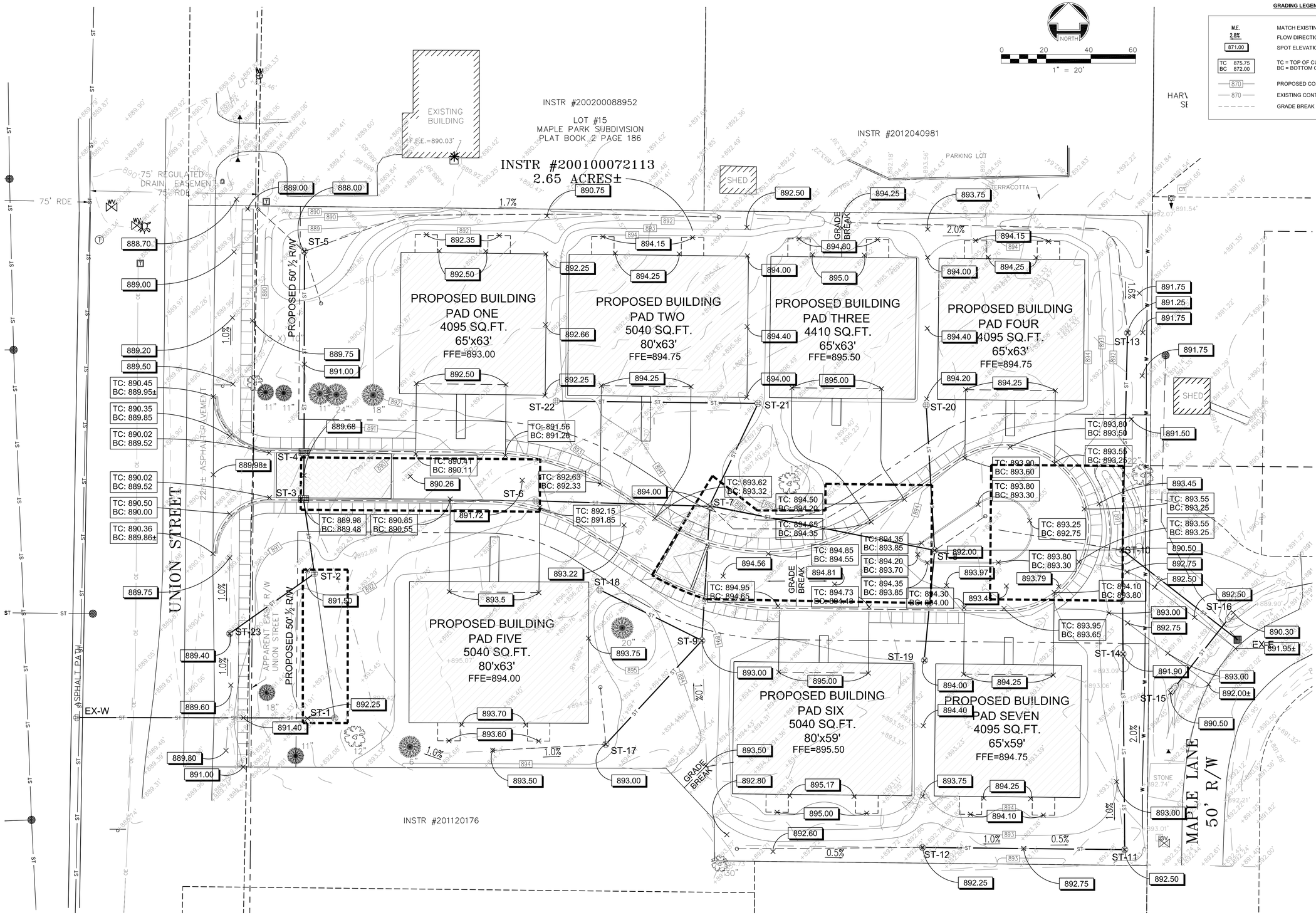

FOR GRADING PLAN GENERAL NOTES, SEE SHEET C009

UTILITY STATEMENT:

THE UTILITIES INDICATED ON THESE PLANS AND ON THE SURVEY HAVE BEEN LOCATED FROM FIELD SURVEY INFORMATION. THE SURVEYOR/ENGINEER MAKES NO GUARANTEES THAT THE UNDERGROUND UTILITIES COMPRISE ALL SUCH UTILITIES IN THE AREA, EITHER IN-SERVICE OR ABANDONED. THE SURVEYOR DOES CERTIFY THAT THEY ARE LOCATED AS ACCURATELY AS POSSIBLE FROM INFORMATION AVAILABLE. THE SURVEYOR/ENGINEER HAS NOT PHYSICALLY LOCATED THE UNDERGROUND UTILITIES.

811 Know what's below. Call before you dig.

ELEMENTS
Engineering, LLC
6213 Behner Way
Indianapolis, IN 46250
(317) 490-7054

THE ANDERSON CORPORATION
301 S. UNION STREET
WESTFIELD, IN 46074

NORTHWALK RESIDENTIAL COMMUNITY
740 N. UNION STREET
WESTFIELD, IN 46074

GRADING PLAN

JENNIFER L. ROSS
STATE OF INDIANA
SEAL 29900
FIRM 0001
REGISTERED PROFESSIONAL ENGINEER
APPROVAL PENDING
NOT FOR CONSTRUCTION
DATE:

DWN BY:	CC
CHKD. BY:	JR
SCALE:	AS NOTED
DATE:	4/4/2014

PROJECT NUMBER
13-76-001

DESIGN PHASE
PLAN REVIEW

PLAN NUMBER
C300

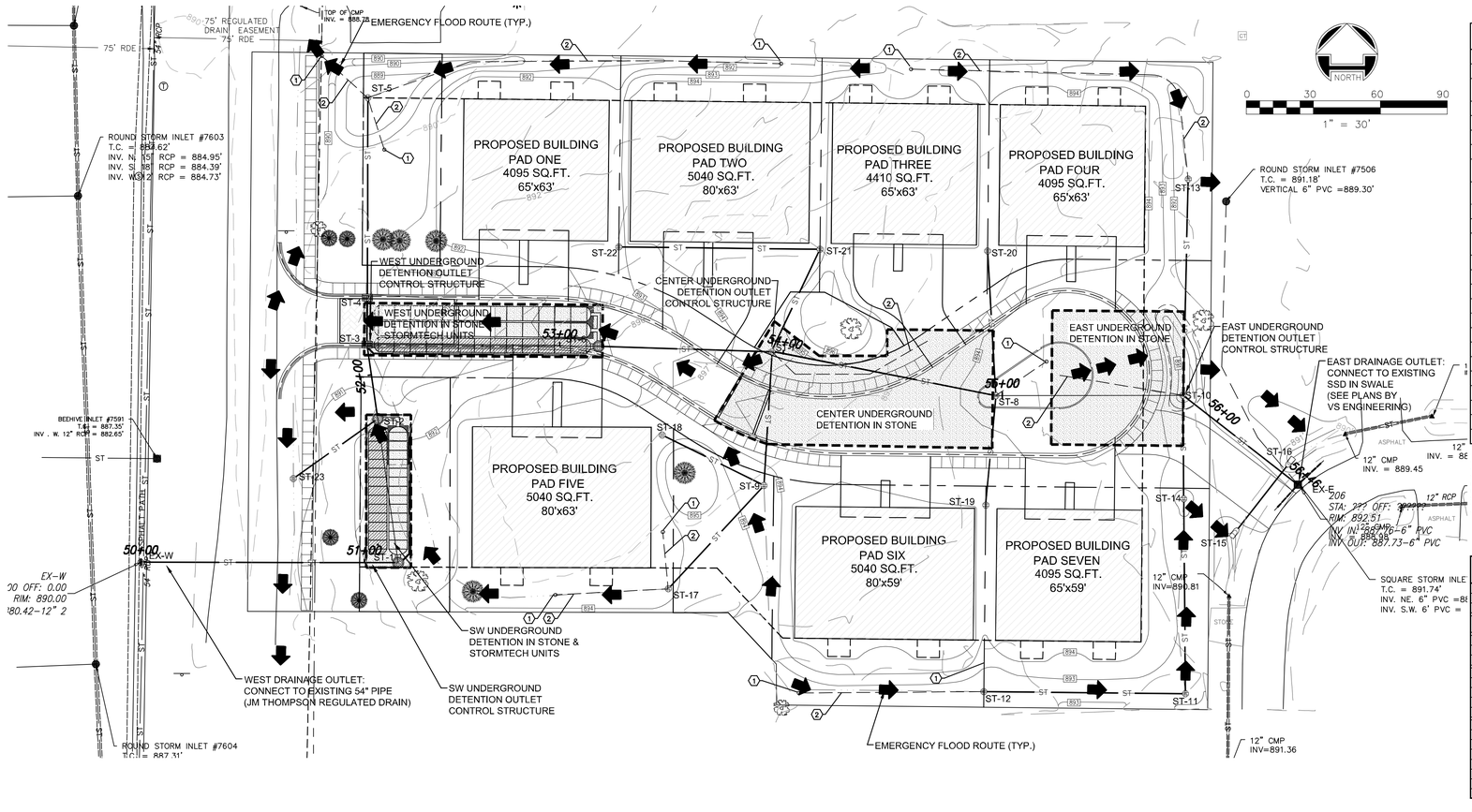

STRUCTURE DATA TABLE

STR. NO.	TC/RIM ELEV. ***	IN SIZE	IN INV.	IN DIRECTION	IN SIZE	IN INV.	IN DIRECTION	OUT SIZE	OUT INV.	OUT DIRECTION	DEPTH TC TO INV (feet)	STR. TYPE	CASTING TYPE ** See note
EX-W	-	54"	-	N	12	-	E	54"	-	S	-	MANHOLE 8' DIA.	-
ST-1	892.00	12"	881.00	E	-	-	-	12"	881	W	11.00	MANHOLE 4' DIA.	NEENAH R-1642
ST-2	891.50	12"	881.00	N	-	-	-	12"	881	S	10.50	MANHOLE 4' DIA. W ith 6" orifice	NEENAH R-2502
ST-3	889.35	12"	884.00	N	-	-	-	12"	881.5	S	7.85	INLET 1A 36" x 24"	NEENAH R-3287-15
ST-4	889.35	12"	885.06	N	-	-	-	12"	884.5	S	4.85	MANHOLE 4' DIA.	NEENAH R-3287-15
ST-5	888.75	-	-	-	-	-	-	12"	885.50	S	3.25	INLET 1A 24" x 22"	NEENAH R-4342
ST-6	890.76	12"	885.00	E	-	-	-	12"	884.00	W	6.76	MANHOLE 4' DIA.	NEENAH R-1642
ST-7	894.00	12"	888.61	S	12"	887.89	E	12"	885.75	W	8.25	DRYWELL MANHOLE 4' DIA.	NEENAH R-2502
ST-7 ****	894.00	10"	888.27	N				12"	885.75	W	8.25	DRYWELL MANHOLE 4' DIA.	NEENAH R-2502
ST-8	892.00	10"	888.93	N	10"	889.93	S	10"	888.83	NW	3.17	INLET 1A 24" x 22"	NEENAH R-4342
ST-9	893.00	12"	889.01	S	10"	889.83	W	12"	888.91	N	4.09	INLET 1A 24" x 22"	NEENAH R-4342
ST-10	890.70	12"	888.10	S	12"	888.10	N	6"	888.00	E	2.70	DRYWELL MANHOLE 4' DIA.	NEENAH R-4342
ST-11	892.50	12"	888.76	W	-	-	-	12"	888.66	N	3.84	INLET 1A 24" x 22"	NEENAH R-4342
ST-12	892.25	-	-	-	-	-	-	12"	889.08	E	3.17	INLET 1A 24" x 22"	NEENAH R-4342
ST-13	891.30	-	-	-	-	-	-	12"	888.45	S	2.85	INLET 1A 24" x 22"	NEENAH R-4342
ST-14	891.90	12"	888.36	S	-	-	-	12"	888.26	N	3.64	INLET 1A 24" x 22"	NEENAH R-4342
ST-15	-	-	-	-	-	-	-	12"	-	-	-	END SECTION	-
ST-16	-	-	-	-	-	-	-	12"	-	-	-	END SECTION	-
ST-17	893.00	-	-	-	-	-	-	10"	889.83	NE	3.17	ADS 12" DRAIN BASIN	DOME
ST-18	893.75	-	-	-	-	-	-	10"	890.58	E	3.17	ADS 12" DRAIN BASIN	DOME
ST-19	894.00	-	-	-	-	-	-	10"	890.83	N	3.17	ADS 12" DRAIN BASIN	DOME
ST-20	894.20	-	-	-	-	-	-	10"	891.03	S	3.17	ADS 12" DRAIN BASIN	DOME
ST-21	894.00	10"	888.63	W	-	-	-	10"	888.53	S	5.47	MANHOLE 4' DIA.	NEENAH R-4342
ST-22	892.25	-	-	-	-	-	-	10"	889.09	E	3.16	ADS 12" DRAIN BASIN	DOME
ST-23	889.40	-	-	-	-	-	-	12"	886.23	NE	3.17	INLET 1A 24" x 22"	NEENAH R-4342

** CASTING TYPE TO BE NEENAH OR APPROVED EQUAL, EXCEPT FOR ADS STRUCTURES
*** RIM ELEVATION IS LOWEST ELEVATION WHERE WATER FLOWS INTO CASTING
**** A SECOND ROW WAS ADDED FOR ST-7 TO SHOW ALL PIPES ENTERING THE STRUCTURE
SEE PIPE TABLE FOR LENGTHS
EXISTING 54" REGULATED DRAIN PIPE LOCATION AND DEPTH ARE ESTIMATED. NO AS-BUILTS ARE AVAILABLE.
INLET SIDE SHOWN ARE PER WESTFIELD DETAIL ST-11, USING A TYPE 1A INLET STRUCTURE
SEE PIPE TABLE FOR LENGTHS
SEE PLAN FOR STRUCTURES LOCATED WITHIN STONE DETENTION STORAGE. (PIPE PENETRATION THROUGH GEOTEXTILE REQUIRED.)
"MH MANHOLE" CONCRETE COLLAR TO BE USED ON ALL CASTINGS WITHIN PAVEMENT EXCEPT AT ST-3 & ST-4.
SEE ORFICES REQUIRED IN STRUCTURES SHOWN ON PIPE TABLE.

PIPE TABLE

FROM STR	TO STR	PIPE SIZE (inches)	LENGTH (FT)	PIPE TYPE	NOTES
ST-5	ST-4	12	88	RCP	
ST-4	ST-3	12	21	RCP	
ST-3	ST-2	12	32	RCP	6" DIAM. ORIFICE PLATE AT ST-3
ST-1	EX-W	12	115	RCP	6" DIAM. ORIFICE PLATE AT ST-1 BORE UNDER STREET
ST-9	ST-7	12	60	RCP	
ST-8	ST-7	10	94	HDPE - PERFORATED	
ST-7	ST-6	12	109	RCP	6" DIAM. ORIFICE PLATE AT ST-7
ST-12	ST-11	12	90	RCP	
ST-11	ST-14	12	87	RCP	
ST-14	ST-10	12	47	RCP	
ST-13	ST-10	12	99	RCP	
ST-10	EX-E	6	65	HDPE	6" DIAM. ORIFICE PLATE AT ST-10
ST-16	ST-15	12	47	RCP	CULVERT w/ END SECTIONS
ST-17	ST-9	10	63	HDPE - PERFORATED	
ST-18	ST-9	10	51	HDPE	
ST-19	ST-8	10	49	HDPE	
ST-20	ST-8	10	65	HDPE	
ST-21	ST-7	10	51	HDPE	
ST-22	ST-21	10	90	HDPE	
ST-23	ST-2	12	45	RCP	

PIPE LENGTHS ARE TO CENTER OF STRUCTURES
ORIFICES ARE AT OUTLET SIDE OF STRUCTURE UNLESS OTHERWISE NOTED

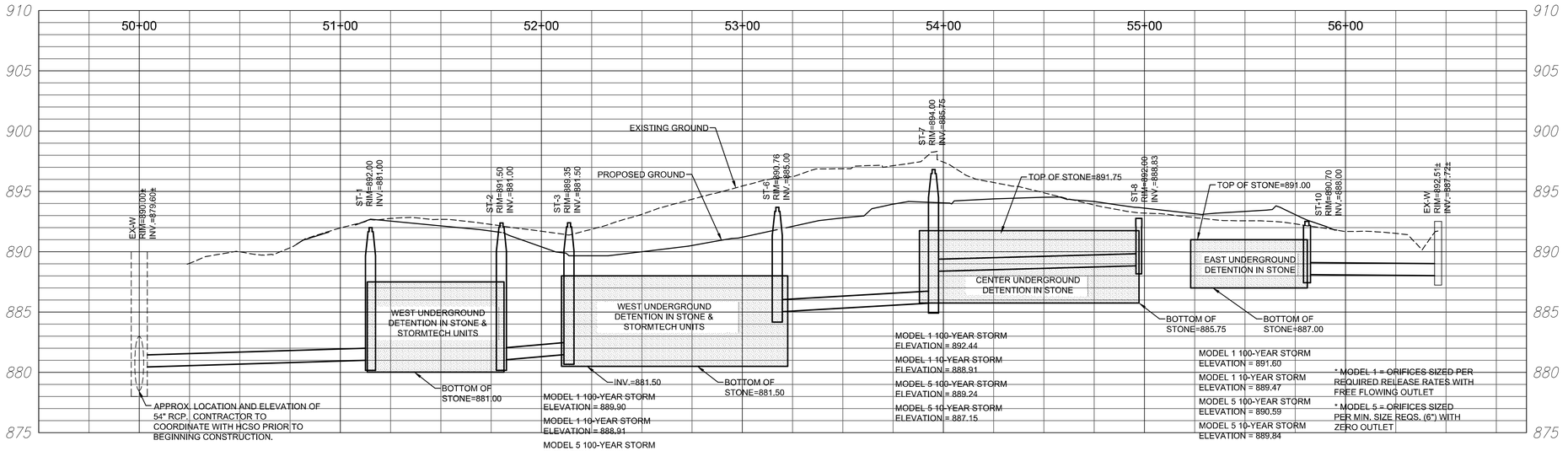

ST-1 TO EX-W (REGULATED DRAIN CONNECTION)

UNDERGROUND DETENTION PROFILE
VERT. SCALE: 1" = 5'
HORIZ. SCALE: 1" = 30'

 # SHEET KEYNOTES:

1. SSD RISER PER DETAIL SHEET.
2. 6" DOUBLE-WALL, SMOOTH BORE PERFORATED PIPE UNDERDRAIN.

NOTE:
STORM PIPE GREATER THAN AND EQUAL TO 12" SHALL BE RCP.

FOR DRAINAGE PLAN GENERAL NOTES, SEE SHEET C009

UTILITY STATEMENT:

THE UTILITIES INDICATED ON THESE PLANS AND ON THE SURVEY HAVE BEEN LOCATED FROM FIELD SURVEY INFORMATION. THE SURVEYOR/ENGINEER MAKES NO GUARANTEES THAT THE UNDERGROUND UTILITIES COMPRISE ALL SUCH UTILITIES IN THE AREA, EITHER IN-SERVICE OR ABANDONED. THE SURVEYOR DOES CERTIFY THAT THEY ARE LOCATED AS ACCURATELY AS POSSIBLE FROM INFORMATION AVAILABLE. THE SURVEYOR/ENGINEER HAS NOT PHYSICALLY LOCATED THE UNDERGROUND UTILITIES.

Know what's below. Call before you dig.

ELEMENTS
Engineering, LLC
6213 Behner Way
Indianapolis, IN 46250
(317) 490-7054

THE ANDERSON CORPORATION
301 S. UNION STREET
WESTFIELD, IN 46074

NORTHWALK RESIDENTIAL COMMUNITY
740 N. UNION STREET
WESTFIELD, IN 46074

DRAINAGE PLAN

JENNIFER L. ROSE
LICENSED PROFESSIONAL ENGINEER
STATE OF INDIANA
PE 10900
APPROVED PENDING FOR CONSTRUCTION

DATE:

DWN BY:	CC
CHKD. BY:	JR
SCALE:	AS NOTED
DATE:	5/9/2014

PROJECT NUMBER
13-76-001

DESIGN PHASE
PLAN REVIEW

PLAN NUMBER
C301

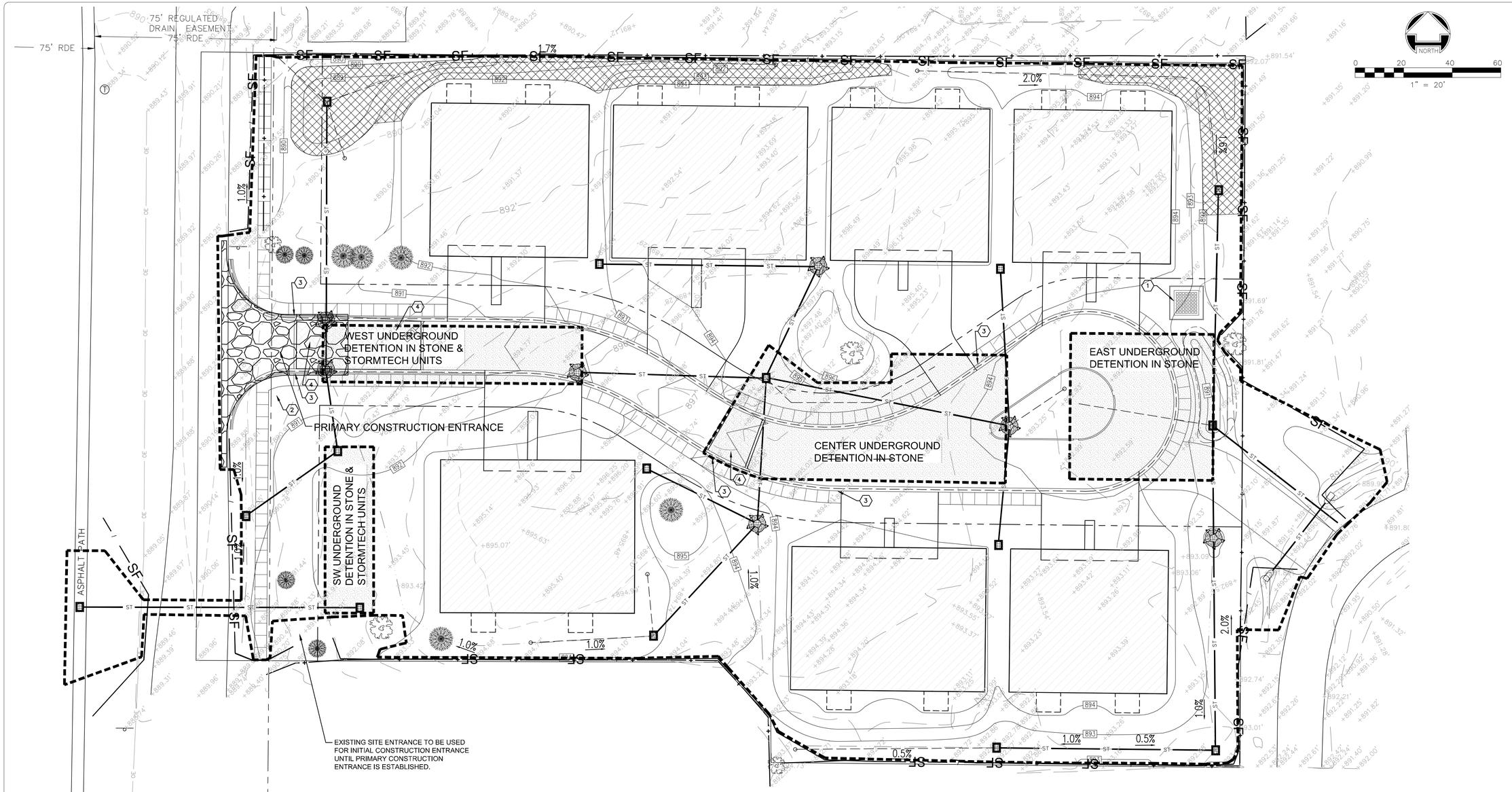

DISTURBED AREAS INACTIVE FOR 15 DAYS OR MORE MUST BE STABILIZED.

ALL DISTURBED AREAS WITHIN CONSTRUCTION LIMITS THAT WILL REMAIN LAWN OR PERVIOUS AREA SHALL BE SEEDED AND PERMANENTLY STABILIZED. SEE LANDSCAPE PLAN. TEMPORARY SEED AREAS PER SEED MIX PROVIDED.

CONTRACTOR TO PERMANENTLY STABILIZE ALL AREAS AS SOON AS POSSIBLE TO PREVENT EROSION & SEDIMENT TRANSPORT.

ALL UNDERGROUND DETENTION STONE TO REMAIN FREE OF SEDIMENT DURING CONSTRUCTION. CONTRACTOR TO PROTECT WASHED STONE TO MAINTAIN 40% VOIDS.

ALL STORM INLETS TO HAVE INLET INSERT TEMPORARY WATER QUALITY BMPs AS SHOWN.

SEE SHEET C401 FOR EROSION CONTROL NOTES.
SEE SHEET C403 FOR EROSION CONTROL DETAILS.

NATIVE PLANT AREAS TO BE SEED MIX APPROVED BY OWNER.

ADDITIONAL EROSION CONTROL MEASURES MAY BE REQUIRED IN THE FIELD BY THE CITY INSPECTOR.

SOIL STOCKPILE LOCATIONS TO BE DETERMINED BY THE CONTRACTOR AND COORDINATED WITH THE OWNER PRIOR TO CONSTRUCTION. CONTRACTOR TO ALSO COORDINATE STOCKPILE LOCATIONS WITH CITY OF WESTFIELD EROSION CONTROL REPRESENTATIVE PRIOR TO CONSTRUCTION. SOIL STOCKPILES SHALL SURROUNDED BY SILT FENCE AND SHALL BE LOCATED AWAY FROM EXISTING TREES TO REMAIN (PER TREE PRESERVATION PLAN).
SOIL STOCKPILES SHALL NOT BE WITHIN 10' OF THE DRIP LINE OF TREES TO REMAIN. SEE GEOTECHNICAL REPORT FOR ESTIMATE OF TOPSOIL DEPTH.

EROSION CONTROL LEGEND

- INLET INSERT (TO BE ADS "FLEXSTORM FX" OR APPROVED EQUAL)
- INLET PROTECTION (WIRE FENCE)
- CONSTRUCTION ENTRANCE
- EROSION CONTROL BLANKET IN SWALE
- CONCRETE WASHOUT AREA
- FLOW DIRECITON
- PROPOSED SWALE
- 950 PROPOSED CONTOUR
- 950 EXISTING CONTOUR
- SF SILT FENCE (COMPOST SOCK)
- CONSTRUCTION LIMITS

SEE PERMANENT STORM WATER QUALITY BMPs ON SHEET C404.

(#) SHEET KEYNOTES:

1. CONCRETE WASHOUT
2. SWPPP & PERMIT POSTING AREA
3. PLACE SILT FENCE BEHIND CURBS AFTER INSTALLATION.
4. PERMEABLE PAVERS SHALL BE MAINTAINED DURING CONSTRUCTION TO AVOID SEDIMENT BUILDUP. CONTRACTOR IS RESPONSIBLE FOR CLEANING PERMEABLE PAVERS AS LISTED IN THE OPERATIONS & MAINTENANCE MANUAL. PAVERS TO BE CLEANED AFTER FINAL BUILDOUT (PUNCH LIST ITEM).

UTILITY STATEMENT:

THE UTILITIES INDICATED ON THESE PLANS AND ON THE SURVEY HAVE BEEN LOCATED FROM FIELD SURVEY INFORMATION. THE SURVEYOR/ENGINEER MAKES NO GUARANTEES THAT THE UNDERGROUND UTILITIES COMPRISE ALL SUCH UTILITIES IN THE AREA, EITHER IN-SERVICE OR ABANDONED. THE SURVEYOR DOES CERTIFY THAT THEY ARE LOCATED AS ACCURATELY AS POSSIBLE FROM INFORMATION AVAILABLE. THE SURVEYOR/ENGINEER HAS NOT PHYSICALLY LOCATED THE UNDERGROUND UTILITIES.

811 Know what's below. Call before you dig.

ELEMENTS
Engineering, LLC
6213 Behner Way
Indianapolis, IN 46250
(317) 490-7054

THE ANDERSON CORPORATION
301 S. UNION STREET
WESTFIELD, IN 46074

NORTHWALK RESIDENTIAL COMMUNITY
740 N. UNION STREET
WESTFIELD, IN 46074

STORMWATER POLLUTION PREVENTION PLAN
DURING CONSTRUCTION

JENNIFER L. RUSHING
STATE OF INDIANA
PE 19900015
REGISTERED PROFESSIONAL ENGINEER
APPROVED FOR CONSTRUCTION
NOT FOR CONSTRUCTION

DATE:

DWN BY:	CC
CHKD. BY:	JR
SCALE:	AS NOTED
DATE:	5/9/2014

PROJECT NUMBER
13-76-001

DESIGN PHASE
PLAN REVIEW

PLAN NUMBER
C400

EROSION AND SEDIMENT CONTROL NARRATIVE AND "RULE 5" DATA

A1: Plan index showing locations of required items: THIS PAGE.

A2: 11x17 inch plat showing building lot numbers/boundaries and road layout/names: N/A

A3: Narrative describing project nature & purpose: CONSTRUCTION OF A NEW RESIDENTIAL COMMUNITY. CONSTRUCTION ITEMS TO INCLUDE 7 NEW DUPLEX PATIO HOMES, ENTRANCE DRIVE WITH CUL-DE-SAC, UTILITIES, AND STORMWATER MANAGEMENT TO SERVE THE PROPOSED FACILITY.

A4: Vicinity map showing project location: COVER SHEET.

A5: Legal description of project site: SEE SURVEY.

A6: Location of proposed site improvements: SEE SHEETS C200 & C201.

A7: 14 digit hydrologic unit code: 05120201090030

Latitude/Longitude (WGS84/NAD83) N: 40d 3' 14" W: 86d 7' 44"

A8: Notation of any State or Federal water quality permits: IDEM RULE 5.

A9: Specific points where stormwater discharge will leave the site: See Sheet C300.

A10: Location & name of all wetlands, lakes & water courses on and adjacent to the site: N/A. See sheet C200.

A11: Identify all Receiving Waters: The west side of the site drains to the J.M. Thompson regulated drain, which discharges to Grassy Branch and eventually drains to Cool Creek. The east side of the site drains to Cool Creek via open swales in Maple Lane. See Sheet C300.

A12: Identification of potential discharges to groundwater: Water could infiltrate under the proposed porous pavement and underground detention areas.

A13: 100-Year floodplains, floodways and floodway fringes: N/A.

A14: Pre-construction and post-construction estimate of peak discharge:
West side (to J.M. Thompson Regulated Drain):
Pre 100 year = 1.80 cfs
Post 100 year = 1.24 cfs (with 6" orifice)

East side (to Cool Creek)
Pre 100 year = 1.94 cfs
Post 100 year = 0.84 cfs (with 6" orifice)

A15: Adjacent land use:
N: Commercial use (nursing home)
S: Residential
E: Residential
W: Union Street R/W & School

A16: Locations and approximate boundaries of all disturbed areas: SEE SHEET C400.

A17: Identification of existing vegetative cover: The site is a single family residence with a large barn. The cover is primarily an open lawn area with several trees many of which are mature.

A18: Soils map including descriptions and limitations: See geotechnical report and soil boring logs available by owner. This information can also be found in the drainage report accompanying these plans.

A19: Locations, size and dimensions of proposed stormwater systems: SEE SHEETS C300 AND C500.

A20: Plan for any off-site construction activities associated with this project: THE ENTRANCES FOR THE SITE WILL BE CONSTRUCTED WITHIN THE PUBLIC RIGHT-OF-WAY OF UNION STREET (MAIN ENTRANCE) AND MAPLE LANE (EMERGENCY ACCESS ONLY). THE UTILITY CONNECTIONS WILL ALSO OCCUR IN THE RIGHT-OF-WAY.

A21: Locations of proposed soil stockpiles, borrow and/or disposal areas: PROPOSED SOIL STOCKPILES WILL BE LOCATED AS SHOWN ON SHEET C400. ADEQUATE EROSION CONTROL METHODS MUST BE USED. SUCH METHODS INCLUDE PERIMETER PROTECTION AROUND STOCKPILE AND MAINTENANCE TO ENSURE CAPTURE OF SEDIMENT.

A22: Existing site topography: SEE SURVEY

A23: Proposed final topography: SEE SHEET C300.

ADDITIONAL INFORMATION:

ESTIMATED PROJECT START DATE: MAY 2014
ESTIMATED PROJECT COMPLETION DATE: SUMMER 2016

CONTACT PERSON:
JENNIFER ROBERTS
ELEMENTS ENGINEERING, LLC
6213 BEHNER WAY
INDIANAPOLIS, IN 46250
(317) 490-7054

EROSION CONTROL NOTES:

1. DISTURBED AREAS INACTIVE FOR 15 DAYS OR MORE MUST BE STABILIZED.

2. NOTICE OF INTENT (NOI) INFORMATION SHALL BE SUBMITTED TO IDEM AT LEAST 48 HOURS PRIOR TO THE INITIATION OF LAND DISTURBING ACTIVITIES AND A COPY OF THE NOI MUST BE FILED WITH THE REVIEWING AGENCY.

3. LAND ALTERATION WHICH STRIPS THE LAND OF VEGETATION, INCLUDING REGRADING, SHALL BE PERFORMED IN A WAY THAT WILL MINIMIZE EROSION.

4. THIS PLAN SHALL NOT BE CONSIDERED ALL-INCLUSIVE AS THE CONTRACTOR SHALL TAKE ALL NECESSARY PRECAUTIONS TO PREVENT SOIL SEDIMENT FROM LEAVING THE SITE. ADDITIONAL EROSION AND SEDIMENT CONTROL MEASURES WILL BE INSTALLED IF DEEMED NECESSARY BY ON-SITE INSPECTION.

5. SEDIMENT LADEN WATER SHALL BE DETAINED BY EROSION CONTROL PRACTICES AS NEEDED TO MINIMIZE SEDIMENTATION IN THE RECEIVING STREAM. NO STORM WATER SHALL BE DISCHARGED FROM THE SITE IN A MANNER THAT CAUSES EROSION AT THE POINT OF DISCHARGE.

6. SEDIMENT BEING TRACKED ONTO PUBLIC OR PRIVATE ROADWAYS SHALL BE MINIMIZED. CLEARING OF ACCUMULATED SEDIMENT SHALL NOT INCLUDE FLUSHING WITH WATER. CLEARED SEDIMENT SHALL BE RETURNED TO THE SITE FOR DISPOSAL.

7. WASTES AND UNUSED BUILDING MATERIALS SHALL NOT BE ALLOWED TO BE CARRIED FROM THE SITE BY STORMWATER RUNOFF. PROPER DISPOSAL OF ALL WASTES AND UNUSED BUILDING MATERIALS IS REQUIRED.

8. SOIL WHICH HAS ACCUMULATED NEXT TO EROSION CONTROL DEVICES SHALL BE COLLECTED AND REDISTRIBUTED ON-SITE AFTER EACH RAINFALL EVENT, AND AT LEAST ONCE PER WEEK.

9. REFER TO DEMOLITION PLAN FOR ITEMS TO BE PROTECTED DURING CONSTRUCTION. EXISTING FEATURES NOTED TO BE DEMOLISHED (STRUCTURES, FENCING, TREES, ETC.) WITHIN CONSTRUCTION AREA SHALL BE REMOVED AND DISPOSED OF OFF-SITE. BURNING IS NOT ALLOWED ON-SITE.

10. CONTRACTOR SHALL FOLLOW THE GUIDELINES FOR EROSION CONTROL CONSTRUCTION SEQUENCING DETAILED IN THESE PLANS. CONTRACTOR IS ULTIMATELY RESPONSIBLE FOR ENSURING THAT THE CONSTRUCTION SEQUENCE OCCURS SO AS TO MINIMIZE EROSION DUE TO CONSTRUCTION ACTIVITIES.

11. THE CONTRACTOR SHALL DEVELOP A DUST CONTROL PLAN FOR THE PROJECT.

12. ALL EROSION CONTROL PRACTICES SHALL BE IN CONFORMANCE WITH THE FOLLOWING:
(1) THE "INDIANA STORMWATER QUALITY MANUAL" BY IDEM.
(2) 327 IAC 15-5 (RULE 5).

13. ALL CONSTRUCTION METHODS AND MATERIALS MUST CONFORM TO CURRENT STANDARDS AND SPECIFICATIONS OF THE FEDERAL, STATE, COUNTY, CITY OR LOCAL REQUIREMENTS, WHICHEVER HAS JURISDICTION.

14. SEE SHEET C403 FOR EROSION CONTROL DETAILS.

15. THESE NOTES SHALL APPLY FOR THE ENTIRE SET OF PLANS REGARDLESS OF THE PARTICULAR PLAN SHEET ON WHICH THEY APPEAR.

PRE-CONSTRUCTION ACTIVITIES:

1. A PRE-CONSTRUCTION MEETING IS REQUIRED AND SHALL INCLUDE, AT A MINIMUM, THE FOLLOWING PARTIES IN ATTENDANCE:
   A. CITY OF WESTFIELD REPRESENTATIVE (CALL 317-896-5452)
   B. JENNIFER ROBERTS, ELEMENTS ENGINEERING
   C. CONTRACTOR (TO BE DETERMINED)

2. OWNER/CONTRACTOR SHALL DESIGNATE THE PERSON RESPONSIBLE FOR COMPLYING WITH THE ON-SITE STORMWATER POLLUTION PREVENTION PLAN. COORDINATE RESPONSIBILITY FOR COMPLETING THE SITE REVIEWS AFTER EACH 1/2" RAINFALL AND/OR A MINIMUM OF ONE TIME PER WEEK.

3. NOTIFY IDEM RULE 5 COORDINATOR (317-233-1864) AND THE CITY OF WESTFIELD PUBLIC WORKS DEPARTMENT (317-896-5452) WITHIN 48 HOURS OF STARTING CONSTRUCTION (BEFORE ANY EARTH MOVING ACTIVITIES). SCHEDULE A PRECONSTRUCTION MEETING WITH THE CITY AFTER THE PERIMETER PRACTICES HAVE BEEN INSTALLED.

4. POST THE CONTACT INFORMATION AT THE CONSTRUCTION ENTRANCE. INCLUDE A COPY OF THE NOI AND THE CONTACT INFORMATION FOR THE ON-SITE PERSON WHO IS RESPONSIBLE FOR IMPLEMENTING THE STORM WATER POLLUTION PREVENTION PLAN (SWPPP). A COPY OF THE SWPPP SHOULD BE ON-SITE AND WEEKLY SITE REPORTS NEED TO BE AVAILABLE WITHIN 48 HOURS OF A REQUEST.

5. AN ORANGE CONSTRUCTION FENCE SHALL BE INSTALLED ALONG THE PERIMETER OF THE TREE PRESERVATION AREAS PRIOR TO ANY EARTH MOVING ACTIVITIES. MARK AND PROTECT TREES TO BE PRESERVED AND ASSOCIATED ROOT ZONES.

6. EVALUATE EXISTING VEGETATION SUITABLE FOR USE AS FILTER STRIPS ALONG SITE BOUNDARIES.

7. MAINTAIN A 10' MINIMUM GRASS FILTER STRIP ALONG THE SITE PERIMETER ADJACENT TO PUBLIC STREETS.

8. ESTABLISH CONSTRUCTION STAGING AND MATERIAL STORAGE AREA FOR EQUIPMENT, VEHICLES AND SITE DELIVERIES AS FAR FROM TREE PROTECTION AREAS AS POSSIBLE.

9. WHILE NOT SPECIFICALLY INDICATED ON THE PLANS, THE CONTRACTOR SHALL KEEP LAND DISTURBANCE ALONG PROPERTY LINES TO A MINIMUM.

INSTALLATION OF PERIMETER SWPP PRACTICES:

1. PRIOR TO CONSTRUCTION, THE FOLLOWING PRACTICES ON THIS SITE NEED TO BE INSTALLED:
   A.. INSTALL PORT-A-LET, SOLID WASTE BIN, CONCRETE WASHOUT FACILITY AND STAGING AREA.
   B.. INSTALL PERIMETER SILT FENCE/COMPOST SOXX AS SHOWN ON SHEET C400.

2. LAND DISTURBANCE MUST BE KEPT TO A MINIMUM UNTIL THESE PRACTICES ARE INSTALLED.

PROJECT CONSTRUCTION:

1. SEE THIS SHEET, ITEM B2.

POST-CONSTRUCTION ACTIVITIES:

1. EROSION AND SEDIMENT CONTROL PRACTICES WILL NEED TO BE INSTALLED AND MAINTAINED DURING THE COURSE OF CONSTRUCTION.
2. STORMWATER POLLUTION PREVENTION PRACTICES SHOULD BE REVIEWED AND MAINTAINED AS NEEDED TO KEEP THEM EFFECTIVE. SEDIMENT WILL BE REMOVED FROM SEDIMENT CONTROL PRACTICES AFTER THE SITE IS PERMANENTLY STABILIZED.
3. REVIEW ALL DISTURBED AREAS FOR FINAL STABILIZATION. A UNIFORM COVER OF 70% PERENNIAL VEGETATION IS REQUIRED.
4. THE CONTRACTOR WILL REMOVE THE TEMPORARY EROSION OR SEDIMENT CONTROL PRACTICES AS THE WATERSHED FOR EACH PRACTICE IS PERMANENTLY STABILIZED.

B1: Description of potential pollutant sources associated with the construction activities: BELOW:

POTENTIAL POLLUTANT SOURCES ASSOCIATED WITH CONSTRUCTION ACTIVITIES

THE FOLLOWING MATERIALS AND SUBSTANCES ARE EXPECTED ON-SITE:

A. PAINTS, THINNERS AND SOLVENTS
ENSURE THAT CONTAINERS HAVE LIDS SO THAT THEY CAN BE COVERED BEFORE PERIODS OF RAIN, AND KEEP CONTAINERS IN DRY, COVERED AREA WHENEVER POSSIBLE.

B. BATTERIES
STORE ONSITE IN DRY COVERED AREA AND DISPOSE OF PER MANUFACTURER'S RECOMMENDATIONS IN CONJUNCTION WITH STATE, LOCAL AND FEDERAL REGULATIONS

C. AEROSOL SPRAY PRODUCTS
STORE IN APPROVED CONTAINERS, AND DISPOSE OF ACCORDING TO LOCAL, COUNTY, STATE AND FEDERAL REGULATIONS OR OTHER PUBLIC AGENCY.

D. ADHESIVES
STORE IN APPROVED CONTAINERS, AND DISPOSE OF ACCORDING TO LOCAL, COUNTY, STATE AND FEDERAL REGULATIONS OR OTHER PUBLIC AGENCY.

E. BIOLOGICAL SOLID WASTE
TRAP IN CONTAINERS, CLEAN REGULARLY, AND DISPOSED OF ACCORDING TO LOCAL, COUNTY, STATE AND FEDERAL REGULATIONS OR OTHER PUBLIC AGENCY. SCHEDULE WASTE COLLECTION MORE FREQUENTLY TO PREVENT CONTAINERS FROM OVERFILLING. UNTREATED, RAW SEWAGE OR SEPTAGE SHOULD NEVER BE DISCHARGED OR BURIED ONSITE.

F. REGULATED PCB MATERIAL
NOT ALLOWED ON SITE.

G. MOTOR OIL
STORE PETROLEUM PRODUCTS FOR VEHICLES IN COVERED AREAS WITH LEAK-PROOF HEAVY DUTY PLASTIC LINER ON THE GROUND WITH DIKES IN PLACE TO CONTAIN ANY SPILLS. IMMEDIATELY CONTAIN AND CLEAN UP ANY SPILLS WITH ABSORBENT MATERIALS. MOTOR OIL SHOULD BE CHANGED IN A DESIGNATED AREA WITH A METAL CATCH PAN WITH MIN. DIMENSIONS OF 4'X4'X8" AND PROPERLY DISPOSED OF.

H. ANTIFREEZE
STORE IN APPROVED CONTAINERS, AND DISPOSE OF ACCORDING TO LOCAL, COUNTY, STATE AND FEDERAL REGULATIONS OR OTHER PUBLIC AGENCY.

I. FUEL
STORE FUEL FOR VEHICLES IN COVERED AREAS WITH LEAK-PROOF HEAVY DUTY PLASTIC ON THE GROUND WITH DIKES IN PLACE TO CONTAIN ANY SPILLS. IMMEDIATELY CONTAIN AND CLEAN UP ANY SPILLS WITH ABSORBENT MATERIALS.

J. BRAKE FLUIDS
STORE IN APPROVED CONTAINERS, AND DISPOSE OF ACCORDING TO LOCAL, COUNTY, STATE AND FEDERAL REGULATIONS OR OTHER PUBLIC AGENCY.

K. HYDRAULIC FLUIDS
STORE IN APPROVED CONTAINERS, AND DISPOSE OF ACCORDING TO LOCAL, COUNTY, STATE AND FEDERAL REGULATIONS OR OTHER PUBLIC AGENCY.

L. RUBBLE-ASPHALT/CONCRETE
DISPOSE OF IN PROPER CONTAINERS AND RECYCLE PER LOCAL, COUNTY, STATE AND FEDERAL REGULATIONS.

M. LAND CLEARING DEBRIS
RECYCLE APPROPRIATELY IN APPROPRIATELY MARKED CONTAINERS AND SCHEDULE REGULAR PICKUP BEFORE OVERFILLING OCCURS.

N. WASTE
ALL WASTE MATERIALS WILL BE COLLECTED AND STORED IN A SECURELY LIDDED APPROVED CONTAINER. ALL TRASH AND NON-RECYCLABLE MATERIALS SHALL BE DEPOSITED IN THE DUMPSTER DAILY. THE DUMPSTER SHOULD EMPTIED PERIODICALLY AND NOT ALLOWED TO OVERFILL. DO NOT THROW TRASH ON GROUND OR BURY MATERIALS ON SITE.

O. UNUSED BUILDING MATERIALS
ALL WASTE MATERIALS WILL BE COLLECTED AND STORED IN A SECURELY LIDDED APPROVED CONTAINER. ALL RECYCLABLE MATERIALS SHALL BE DEPOSITED IN THE CONTAINER DAILY. THE CONTAINER SHOULD EMPTIED PERIODICALLY AND NOT ALLOWED TO OVERFILL. DO NOT BURY MATERIALS ON SITE.

P. CONCRETE TRUCK WASHOUT
CONCRETE WASHOUT AREAS SHOULD BE A BERMED, SELF-CONTAINED AREA APPROXIMATELY 10'X10'X3' IN SIZE TO CONTAIN THE CONCRETE. DRIED MATERIAL SHALL BE REMOVED AND DISPOSED OF PROPERLY. THE CONCRETE WASHOUT AREA SHALL BE LOCATED IN AN AREA WHERE FUTURE PAVEMENT WILL BE INSTALLED, BUT AWAY FROM STORMWATER STRUCTURES AND WATER BODIES. THE GEOTECHNICAL CONSULTANT SHALL ADVISE ON THE LOCATION FOR THIS ACTIVITY.

Q. FERTILIZERS/PESTICIDES/DETERGENTS
FERTILIZERS AND PESTICIDES WILL BE APPLIED ONLY IN THE MINIMUM AMOUNTS RECOMMENDED BY THE MANUFACTURER. ONCE APPLIED, FERTILIZER WILL BE WORKED INTO THE SOIL TO LIMIT THE EXPOSURE TIME TO STORM WATER. STORAGE WILL BE IN A COVERED SHED. THE CONTENTS OF ANY PARTIALLY USED BAG OF FERTILIZER WILL BE TRANSFERRED TO A SEALABLE PLASTIC BIN TO AVOID SPILLS. THE ORIGINAL LABEL AND SAFETY INFORMATION WILL BE RETAINED. STORAGE AREAS SHALL BE BERMED TO CONTAIN SPILL FROM RUNNING INTO GROUNDWATER OR STORM SYSTEM.

B2: Sequence describing stormwater quality measure implementation relative to land disturbing activities: BELOW:

SITE SPECIFIC SEQUENCE AND ADDITIONAL NOTES:
SEE PRE-CONSTRUCTION ACTIVITIES DESCRIBED ON THIS SHEET. IT IS CRITICAL THAT PRE-CONSTRUCTION METHODS ARE IN PLACE PRIOR TO CONSTRUCTION.

THE PERIMETER PROTECTION SHOULD BE CONSTRUCTED AND STABILIZED AS EARLY AS PRACTICAL TO PREVENT RUN-OFF FROM LEAVING THE SITE OR CLEAN OFF-SITE WATER FROM WASHING THROUGH THE SITE. SEEDING AND ANY OTHER REQUIRED EROSION CONTROL MEASURES SHALL BE INSTALLED IMMEDIATELY AFTER COMPLETING WORK IN A PORTION OF THE SITE.

1.) INSTALL PERIMETER BMPs AND CONTINUE TO MONITOR DURING CONSTRUCTION. INSTALL TREE PROTECTION FENCING FOR AREAS TO REMAIN UNDISTURBED.
NOTE THAT THE SITE INCLUDES UNDERGROUND DETENTION WITHIN THE STREET. IT IS CRITICAL THAT SEDIMENT BE PREVENTED FROM ENTERING THE STONE BASE FOR THE UNDERGROUND DETENTION. CONTRACTOR SHALL BE RESPONSIBLE FOR REPLACING THE DETENTION STONE AND FEATURES IF THEY ARE CONTAMINATED WITH SEDIMENT DURING CONSTRUCTION.

2.) NECESSARY SITE CLEARING AND GRADING MAY COMMENCE, INCLUDING EXCAVATION FOR UNDERGROUND STORAGE AND OUTLET PIPE AS WELL AS BUILDING CONSTRUCTION.
3.) TEMPORARILY SEED ALL DISTURBED AREAS.
4.) INSTALL PROPOSED UNDERGROUND DETENTION SYSTEM, UTILITIES, PAVEMENT AND OTHER SITE FEATURES INCLUDING BUILDING PADS FOR DUPLEX BUILDINGS.
5.) SEED ALL BUILDING PAD AREAS FOR DUPLEXES THAT WILL BE CONSTRUCTED IN THE FUTURE. BEGIN WORK ON DUPLEX UNITS TO BE CONSTRUCTED IN CONJUNCTION WITH THE STREET, DRAINAGE & UTILITY INFRASTRUCTURE.
6.) INSTALL EROSION CONTROL FEATURES FOR EACH DUPLEX UNIT AND EACH STORMWATER INLET & STRUCTURE AND ANY REMAINING BMPs WITHIN THE SITE.
7.) MAINTAIN ALL EROSION CONTROL BMPs DURING CONSTRUCTION PER THE METHODS DESCRIBED ON THIS SHEET.
8.) REPAIR PAVEMENT AREAS AS NEEDED.
9.) SEED DISTURBED AREAS NOT PREVIOUSLY SEEDED.
CONTRACTOR TO MONITOR AND MAINTAIN EROSION AND SEDIMENT CONTROL PRACTICES THROUGHOUT THE DURATION OF THE PROJECT.

B3: Stable construction entrance locations and specifications: CONSTRUCTION ENTRANCE SHOWN ON SHEET C400.
B4: Sediment control measures for sheet flow areas: SEE SHEETS C400 & C403.
B5: Sediment control measures for concentrated flow areas: SEE SHEETS C400 & C403.
B6: Storm sewer inlet protection measure locations and specifications: SEE SHEETS C400 TO C403.
B7: Runoff control measures: SEE SHEETS C400 & C403.
B8: Stormwater outlet protection specifications: SEE SHEETS C400 & C403.
B9: Grade stabilization structure locations and specifications: SEE SHEETS C400 & C403.
B10: Location, dimensions, specifications and construction details of each stormwater quality measure: SEE SHEETS C400 TO C403.
B11: Temporary surface stabilization methods appropriate for each season: SEE SHEET C403.
B12: Permanent surface stabilization specifications: SEE SHEET C403.

B13: Material handling and spill prevention plan: BELOW:

POLLUTION PREVENTION - DURING CONSTRUCTION

THE PROPER MANAGEMENT AND DISPOSAL OF WASTES SHOULD BE PRACTICED ON SITE AT ALL TIMES TO REDUCE POLLUTION STORM WATER RUNOFF. HAZARDOUS WASTE SHOULD ALWAYS BE DISPOSED OF THROUGH A DESIGNATED HAZARDOUS WASTE MANAGEMENT OR RECYCLING FACILITY. HAZARDOUS WASTE SHOULD NOT BE DISPOSED OF WITH ORDINARY GARBAGE, OR POURED INTO THE STORM OR SANITARY SEWER SYSTEM OR ONTO THE GROUND. IN CASE OF EMERGENCY CALL 911.

DESIGNATE A WASTE COLLECTION AREA ON-SITE THAT DOES NOT RECEIVE A SUBSTANTIAL AMOUNT OF RUNOFF FROM UPLAND AREAS AND DOES NOT DRAIN DIRECTLY INTO A WATER BODY.

KEEP PRODUCTS IN ORIGINAL CONTAINERS UNLESS THEY ARE NOT RE-SEALABLE, THEN ORIGINAL LABEL AND MATERIAL SAFETY DATA WILL BE RETAINED. IF A PRODUCT DOES NOT HAVE ITS ORIGINAL LABEL, LABEL IT YOURSELF IF YOU A SURE OF CONTENTS. MAKE SURE PRODUCTS ARE PROPERLY SEALED TO PREVENT LEAKS AND SPILLS AND STORED IN A WEATHER PROOF SELF CONTAINED AREA AWAY FROM HEAT, SPARKS AND FLAMES.

A PROGRAM FOR RECYCLING OR DISPOSAL OF MATERIALS ASSOCIATED WITH OR FROM THE PROJECT SITE SHALL BE ESTABLISHED. ALL RECYCLING CONTAINERS WILL BE CLEARLY LABELED.

ALL CONSTRUCTION ACTIVITIES TO BE MONITORED AND MAINTAINED BY THE CONTRACTOR. AS EACH NEW SUB-CONTRACTOR COMES ON-SITE, THE CONTRACTOR WILL CONDUCT AND DOCUMENT A MEETING TO ENSURE AWARENESS OF THE POLLUTANT PREVENTION PROGRAM. GUIDELINES FOR PROPER HANDLING, STORAGE AND DISPOSAL OF CONSTRUCTION SITE WASTES SHOULD BE POSTED IN STORAGE AND USE AREAS AND WORKERS SHOULD BE TRAINED IN THESE PRACTICES TO ENSURE EVERYONE IS KNOWLEDGEABLE ENOUGH TO PARTICIPATE.

CLEAN UP SPILLS IMMEDIATELY. FOR HAZARDOUS MATERIALS FOLLOW CLEANUP INSTRUCTIONS ON THE PACKAGE. USE ABSORBENT MATERIAL SUCH AS SAWDUST OR KITTY LITTER TO CONTAIN THE SPILL. PROPER SAFETY MATERIALS SHOULD BE STORED ON SITE IN CASE OF ACCIDENT OR SPILL WHICH SHOULD INCLUDE BUT NOT LIMITED TO BROOMS, DUST PANS, MOPS, RAGS, GLOVES, GOGGLES, AND PLASTIC AND METAL TRASH CONTAINERS SPECIFICALLY FOR THAT PURPOSE. SPILL AREAS SHOULD BE WELL VENTILATED.

DURING THE DEMOLITION PHASE OF CONSTRUCTION, PROVIDE EXTRA CONTAINERS AND SCHEDULE MORE FREQUENT PICKUPS FOR RECYCLABLES AND GARBAGE. COLLECT, REMOVE, AND DISPOSE OR ALL CONSTRUCTION SITE WASTES AT AUTHORIZED DISPOSAL AREAS. CONTACT LOCAL ENVIRONMENTAL AGENCY TO IDENTIFY DISPOSAL SITES OR AUTHORIZED CONTRACTORS.

CONSTRUCTION VEHICLES SHOULD BE INSPECTED FOR LEAKS DAILY AND REPAIRED IMMEDIATELY IN A SELF CONTAINED AREA DESIGNATED FOR VEHICLE MAINTENANCE AND REPAIR. THE VEHICLE MAINTENANCE AREA SHOULD BE CONDUCTED ON AN AREA THAT IS TO BECOME FUTURE PAVEMENT. THIS AREA WILL BE DESIGNED TO MINIMIZE CONTACT BETWEEN EQUIPMENT ACTIVITIES AND RAINFALL OR RUNOFF. SPILLS MUST BE CLEANED UP AND MATERIALS DISPOSED OF IMMEDIATELY.

CONTAINERS OR EQUIPMENT THAT MAY MALFUNCTION AND CAUSE LEAKS OR SPILLS SHOULD BE IDENTIFIED THROUGH REGULAR INSPECTION AND STORAGE OF USE AREAS. EQUIPMENT AND CONTAINERS SHOULD BE INSPECTED REGULARLY FOR LEAKS, CORROSION, SUPPORT OR FOUNDATION FAILURE, OR ANY OTHER SIGNS OF DETERIORATION AND SHOULD BE TESTED FOR SOUNDNESS. ANY FOUND TO BE DEFECTIVE SHOULD BE REPAIRED OR REPLACED IMMEDIATELY.

B14: Monitoring and maintenance guidelines for each proposed pollution prevention measure: BELOW:

EROSION CONTROL MEASURES MAINTENANCE REQUIREMENTS

SILT FENCE MAINTENANCE REQUIREMENTS: (COMPOST SOCK/SILT SOXX)

1. INSPECT THE SILT FENCE PERIODICALLY AND AFTER EACH STORM EVENT.
2. IF FENCE FABRIC TEARS, STARTS TO DECOMPOSE, OR IN ANY WAY BECOMES INEFFECTIVE, REPLACE THE AFFECTED PORTION IMMEDIATELY.
3. REMOVE DEPOSITED SEDIMENT WHEN IT REACHES HALF THE HEIGHT OF THE FENCE AT ITS LOWEST POINT OR IS CAUSING THE FABRIC TO BULGE.
4. TAKE CARE TO AVOID UNDERMINING THE FENCE DURING CLEAN OUT.
5. AFTER THE CONTRIBUTING DRAINAGE AREA HAS BEEN STABILIZED, REMOVE THE FENCE AND SEDIMENT DEPOSITS, BRING THE DISTURBED AREA TO GRADE, AND STABILIZE.

TEMPORARY INLET PROTECTION MAINTENANCE REQUIREMENTS: (COMPOST SOCK/SILT SOXX)

1. INSPECT INLET PROTECTION FEATURES WEEKLY AND AFTER STORM EVENTS.
2. IF PROTECTION FABRIC TEARS, STARTS TO DECOMPOSE, OR IN ANY WAY BECOMES INEFFECTIVE, REPLACE THE AFFECTED PORTION IMMEDIATELY.
3. REMOVE DEPOSITED SEDIMENT WHEN IT REACHES HALF THE HEIGHT OF THE SILT SOXX AT ITS LOWEST POINT OR IS CAUSING THE FABRIC TO BULGE.
4. AFTER THE CONTRIBUTING DRAINAGE AREA HAS BEEN STABILIZED, REMOVE THE SILT SOXX AND SEDIMENT DEPOSITS, BRING THE DISTURBED AREA TO GRADE, AND STABILIZE.

TOPSOIL (SALVAGED & REAPPLIED):

1. INSPECT NEWLY TOPSOILED AREAS FREQUENTLY UNTIL VEGETATION IS ESTABLISHED.
2. REPAIR DAMAGED OR ERODED AREAS AND REVEGETATE AS NEEDED.

EROSION AND SEDIMENT CONTROL POST CONSTRUCTION DATA

THE PROJECT IS LOCATED AT 740 N UNION STREET IN THE CITY OF WESTFIELD IN THE SW CORNER OF SECTION 31, T19N, R4E, WASHINGTON TOWNSHIP, HAMILTON COUNTY, INDIANA.

THE GREATEST AMOUNT OF POLLUTANTS EXPECTED FROM THIS SITE WILL COME FROM THE VEHICLES THAT UTILIZE THE SITE. A MAJORITY OF THESE POTENTIAL POLLUTANTS WILL BE COLLECTED WITHIN THE POROUS PAVEMENT AND WATER QUALITY BMPs. HOWEVER, POTENTIAL POLLUTANTS FROM VEHICLES INCLUDE BUT ARE NOT LIMITED TO: GREASE, OIL, GASOLINE, DIESEL, ANTIFREEZE, BRAKE FLUID, RUBBER FRAGMENTS AND OTHER HYDROCARBONS AND METALS. ALSO SAND AND GRAVEL FROM ROADWAY SURFACES AND ROAD WEATHER TREATMENTS ARE ASSUMED. BACTERIA AND OTHER BIOLOGICAL AGENTS FROM TRASH COLLECTION AREAS AND LITTERING ARE ALSO CONSIDERED POTENTIAL POLLUTANTS. ELEVATED RECEIVING WATER TEMPERATURES DUE TO IMPERVIOUS SURFACE RUNOFF ARE ANTICIPATED.

STORMWATER POLLUTION PREVENTION PLAN POST CONSTRUCTION COMPONENT

C1: Description of pollutants and their sources associated with the proposed land use: The long-term pollutants expected from the proposed site are those that relate to vehicle traffic, lawn maintenance and landscape vehicle use. The vehicular pollution sources are: leaking fuel, oil or fluids (brake & antifreeze), brake dust, metals, rubber fragments and road grit, salts and sands. Lawn maintenance pollution sources include exposed soils, leaves, mulch, trash, debris, fertilizers & pesticides. The typical pollution sources in a landscaping environment are: trash, mulch, cleaning agents, chemicals, and the aforementioned vehicular pollution sources.

C2: Sequence describing stormwater quality measure implementation:
Stormwater runoff from roof areas and paved areas will be collected by the permeable pavement and storm inlet inserts. The permeable pavement system and storm inlet insert will be used to collect the larger suspended particles. The vegetated swales and rain garden basin will reduce the velocity of the runoff, which encourages bio-filtration of nutrients into plants and settlement of larger susupended particles. The combination of these methods in the treatment train will ensure that the TSS requirements are met.

Following construction, all permanent erosion control measures shall be inspected and maintained by the project Owner as described in the operations and maintenance manual.

C3: Description of proposed post construction stormwater quality measures: Post construction stormwater quality measures to aid in reducing the amount of pollutants leaving the site include permeable pavement, storm inlet insert, the rain garden basin, and landscaping materials.

Post construction stormwater quality measures will also include the use of vegetative cover on the permanent grass areas, temporary and permanent erosion control blankets in specified areas. Both the vegetative cover and erosion control blankets are intended to stabilize the disturbed areas and to serve as a sediment trap for finer particles within the runoff.

Permeable pavement and a storm inlet insert will also be used as a post construction stormwater quality measure. The permeable pavement and storm inlet insert will be used to allow debris and larger particles to settle before being discharged into the underground detention stone layer.

The mulch areas and landscaping materials will be used as a post construction stormwater quality measure to filter finer particles. These areas encourage bio-filtration and settlement of suspended particles while slowly filtering through the ground and mulch before reaching the root systems of the landscaping materials.

C4: **Location, dimensions, specifications and construction details of each stormwater quality measure:** The stormwater quality measures for post construction activities are indicated within these construction documents. Refer to sheets C400 - C403 for erosion control measures to be implemented within the project site. Dimensions, specifications and construction details for these stormwater quality measures are included on those sheets located within the aforementioned series of construction documents.

C5: **Description of maintenance guidelines for proposed post construction water quality measures:** The project owner will provide maintenance activities for the post construction water quality measures as described below and in accordance with the Operations & Maintenance (O&M) Manual that is included as part of these plans. A summary of maintenance activities will be completed as described below (see O&M for a more complete description):

The permeable pavement will be inspected monthly. Debris and sediment accumulation shall be removed in accordance with the Operations and Maintenance Manual.

All inlet castings will be inspected monthly. Debris and trash around or obstructing inlets will be removed.

Grass areas surrounding inlets will be maintained on a regular mowing cycle. Trash and debris will be removed from seeded and paved areas.

Damage to inlet castings, inlet structures, storm structures, or catch basins should be repaired as soon as possible.

Inlet Insert BMPs will be inspected monthly. Maintenance repairs shall be made in accordance with the Operations & Maintenance Manual. The product vendor contact information is located in the O&M. The product will require replacement at the end of its life and the vendor should be contacted in advance to order a replacement product prior to that. See sheet C700A for the inlet insert detail and the O&M for more information.

PLAN INDEX FOR CONSTRUCTION / STORMWATER POLLUTION PREVENTION PLAN

	CONSTRUCTION PLAN ELEMENTS	
A1	PLAN INDEX	C401
A2	11 X 17 PLAT	NOT INCLUDED
A3	NARRATIVE	C401
A4	VICINITY MAP	COVER
A5	LEGAL DESCRIPTION	SURVEY
A6	SITE IMPROVEMENTS	C200
A7	HYDROLOGIC CODE	C401
A8	WATER QUALITY PERMITS	C300
A9	STORM WATER DISCHARGE POINTS	C300
A10	WATER NAMES AND LOCATIONS ADJACENT TO SITE	C401
A11	RECEIVING WATER	C401
A12	POTENTIAL GROUNDWATER DISCHARGES	C401
A13	100-YR FLOODPLAINS, FLOODWAYS&FLOODWAY FRINGES	C401
A14	PEAK DISCHARGE ESTIMATE	C401
A15	ADJACENT LAND USE	C401
A16	LIMITS OF CONSTRUCTION/DISTURBED AREAS	C400
A17	EXISTING VEGETATIVE COVER	C100
A18	SOILS	C500
A19	PROPOSED STORM WATER SYSTEM	N/A
A20	OFF-SITE CONSTRUCTION ACTIVITIES	N/A
A21	STOCKPILES/BORROW/DISPOSAL AREAS	C101
A22	EXISTING TOPOGRAPHY	C300
A23	PROPOSED TOPOGRAPHY	C401
	ASSESSMENT OF STORM WATER POLLUTION PREVENTION PLAN-CONSTRUCTION COMPONENT	
B1	POLLUTANT SOURCES	C401
B2	STORM WATER QUALITY MEASURE IMPLEMENTATION	C401
B3	CONSTRUCTION ENTRANCE	C401
B4	SEDIMENT CONTROL MEASURES-SHEET FLOW	C400-C401
B5	SEDIMENT CONTROL MEASURES-CONCENTRATED FLOW	C400-C401
B6	STORM INLET PROTECTION MEASURES	C400-C401
B7	RUNOFF CONTROL MEASURES	C400-C401
B8	OUTLET PROTECTION	C400
B9	GRADE STABILIZATION STRUCTURES	C400
B10	STORM WATER QUALITY MEASURE	C401
B11	TEMPORARY SURFACE STABILIZATION	C400-C403
B12	PERMANENT SURFACE STABILIZATION	C400-C403
B13	MATERIAL HANDLING AND SPILL PREVENTION	C402
B14	MONITORING AND MAINTENANCE GUIDELINES	C401
B15	EROSION AND SEDIMENT CONTROL SPECIFICATIONS FOR EACH LOT	N/A
	STORM WATER POLLUTION PREVENTION PLAN-POST CONSTRUCTION COMPONENT	
C1	OUTLET PROTECTION	C401
C2	STORM WATER QUALITY MEASURE IMPLEMENTATION	C401
C3	STORM WATER QUALITY MEASURES	C401
C4	STORM WATER QUALITY MEASURE DETAILS	C401
C5	STORM WATER QUALITY MEASURE MAINTENANCE	C401

SEE SHEET C403 FOR EROSION CONTROL DETAILS

UTILITY STATEMENT:

THE UTILITIES INDICATED ON THESE PLANS AND ON THE SURVEY HAVE BEEN LOCATED FROM FIELD SURVEY INFORMATION. THE SURVEYOR/ENGINEER MAKES NO GUARANTEES THAT THE UNDERGROUND UTILITIES COMPRISE ALL SUCH UTILITIES IN THE AREA, EITHER IN-SERVICE OR ABANDONED. THE SURVEYOR DOES CERTIFY THAT THEY ARE LOCATED AS ACCURATELY AS POSSIBLE FROM INFORMATION AVAILABLE. THE SURVEYOR/ENGINEER HAS NOT PHYSICALLY LOCATED THE UNDERGROUND UTILITIES.

811 Know what's below. Call before you dig.

ELEMENTS
Engineering, LLC
6213 Behner Way
Indianapolis, IN 46250
(317) 490-7054

THE ANDERSON CORPORATION
301 S. UNION STREET
WESTFIELD, IN 46074

NORTHWALK RESIDENTIAL COMMUNITY
740 N. UNION STREET
WESTFIELD, IN 46074

EROSION CONTROL (SWPPP) NOTES

APPROVAL PENDING NOT FOR CONSTRUCTION

DATE:

DWN BY:	CC
CHKD. BY:	JR
SCALE:	AS NOTED
DATE:	5/9/2014

PROJECT NUMBER 13-76-001

DESIGN PHASE PLAN REVIEW

PLAN NUMBER C401

SECTION D

MATERIAL HANDLING AND SPILL PREVENTION PLAN

PURPOSE:
The purpose of this plan is two fold:
1. To help protect the health and safety of those working on the site as well as the environment.
2. Preventing the contamination of storm water runoff.

Pollutants generated onsite may include gasoline, diesel fuel, oils, grease, paints, pesticides, nutrients, concrete washout, soil, solvents, paper, plastic, Styrofoam, metals, glass and other forms of liquid or solid wastes. This plan outlines procedures to help prevent health and safety issues, contamination of storm water by onsite pollutants, help prevent fuel and chemical spills and provide a response procedure should a spill occur.

PREVENTION & READINESS:
1. The contractor or responsible party will prepare a contact list in the event of a spill on the site. The contact list will have names and contact numbers. The contact list will specify first responders and a chain of command. Include information on what circumstances require the initiation of the contact list and chain of command.

2. The contractor/owner shall maintain a list of qualified contractors, Vac-trucks, tank pumpers and other equipment or businesses qualified to do clean-up operations. Absorbent materials and supplies need to be available onsite in sufficient quantities to address minor spills. All employees need to be educated on the proper application of the absorbent materials.

3. All maintenance and equipment operators must be aware and trained for prevention of spills. A continuing education program is required for new employees and emphasizing the importance to all employees.

4. All materials used in the course of a cleanup will be disposed in a manor approved by Indiana Department of Environmental Management.

5. Using water to flush spilled material will not be permitted unless authorized by a state, federal, or local agency. Tarps can be used to cover spilled material during rain events.

SPILL RESPONSE:

MINOR - (Defined as: Small spills that typically involve oil gasoline, paint, hydraulic fluid etc.) Minor spills can be controlled by the first responder at the discovery of the spill.
1. Contain spill to prevent material from entering storm or ground water. Do not flush with water or bury.
2. Use absorbent material to clean-up spill material and any subsequently contaminated soil and dispose of properly.

SEMI-SIGNIFICANT Spills - (Defined as: Approximately ten gallons or less of pollutant with no contamination of ground or surface waters.) Minor spills can be generally controlled by the first responder with help from other site personnel. This response may require other operations to stop to make sure the spill is quickly and safely addressed.
At the discovery of the spill:
1. Contain spill to prevent material from entering storm or ground water. Do not flush with water or bury.
2. Use absorbent material to clean-up spills and dispose of properly. Spills on impervious surfaces should be contained with a dry absorbent. Spills on clayey soils should be contained by constructing an earthen dike and should be disposed of as soon as possible to prevent migration deeper into the soil and groundwater. Dispose of contaminated soils or absorbents properly.
3. Contact 911 if this spill could be a safety issue.
4. Contact supervisors and designated inspectors immediately
5. Contaminated solids to be removed to an approved landfill.

MAJOR OR HAZARDOUS Spills - (Defined as: More than ten gallons, there is the potential for death, injury or illness to humans or animals or has the potential for surface or groundwater pollution.)
1. Control or contain the spill without risking bodily harm. Temporarily plug storm drains if possible to prevent migration of the spill into the stormwater system.
2. Immediately contact the local Fire Department at 911 to report any hazard material spill.
3. Contact supervisors and designated inspectors immediately. Other county or municipal officials (see list below) responsible for storm water facilities should be contacted as well. The contractor is responsible for having these contact numbers available at the job site. A written report should be submitted to the owner as soon as possible.
4. As soon as possible but within 2 hours of discovery, contact the Department of Environmental Management, Office of Emergency Response 1-888-233-7745. The following information should be noted for future reports to IDEM or the National Response Center.
o Name, address and phone number of person making the spill report
o The location of the spill
o The time of the spill
o Identification of the spilled substance
o Approximate quantity of the substance that has been spilled or may be further spilled
o The duration and source of the spill
o Name and location of the damaged waters
o Name of spill response organization
o What measures were taken in the spill response
o Other information that may be significant

Additional regulation or requirements may be present. A spill response professional should be consulted to make sure all appropriate and required steps have been taken. Contaminated solids should only be removed from the site after approval is given by Emergency Response.

IDEM 24 HOUR RESPONSE NUMBER:
1-888-233-7745

SECTION D (Continued)

MATERIAL HANDLING AND SPILL PREVENTION PLAN

THE FOLLOWING PROCEDURES AND PRACTICES WILL HELP PREVENT UNNECESSARY SPILLS:

D1: VEHICLE AND EQUIPMENT FUELING

Description and Purpose:

Vehicle equipment fueling procedures and practices are designed to prevent fuel spills and leaks, and reduce or eliminate contamination of stormwater. This can be accomplished by using offsite facilities, fueling in designated areas only, enclosing or covering stored fuel, implementing spill controls, and training employees and subcontractors in proper fueling procedures.

Limitations:

Onsite vehicle and equipment fueling should only be used where it is impractical to send vehicles and equipment offsite for fueling.

Implementation:

1. Use offsite fueling stations as much as possible. These businesses are better equipped to handle fuel and spills properly. Performing this work offsite can also be economical by eliminating the need for a separate fueling area at a site.
2. Discourage "topping-off" of fuel tanks.
3. Absorbent spill cleanup materials and spill kits should be available in fueling areas and on fueling trucks, and should be disposed of properly after use.
4. Drip pans or absorbent pads should be used during vehicle and equipment fueling, unless the fueling is performed over an impermeable surface in a dedicated fueling area.
5. Use absorbent materials on small spills. Do not hose down or bury the spill. Remove the absorbent materials promptly and dispose of properly.
6. Avoid mobile fueling of mobile construction equipment around the site; rather, transport the equipment to designated fueling areas.
7. Train employees and subcontractors in proper fueling and cleanup procedures.
8. Dedicated fueling areas should be protected from stormwater run-on and runoff, and should be located at least 50 feet away from the downstream drainage facilities and watercourses. Fueling must be performed on level-grade areas.
9. Protect fueling areas with berms and dikes to prevent run-on, runoff, and to contain spills.
10. Nozzles used in vehicle and equipment fueling should be equipped with an automatic shutoff to control drips. Fueling operations should not be left unattended.
11. Federal, state, and local requirements should be observed for any stationary above ground storage tanks.

Inspection and Maintenance

1. Vehicles and equipment should be inspected each day of use for leaks. Leaks should be repaired immediately or problem vehicles or equipment should be removed from the project site.
2. Keep ample supplies of spill cleanup materials onsite.
3. Immediately clean up spills and properly dispose of contaminated soils.

D2: SOLID WASTE MANAGEMENT

Description of Purpose:

Solid waste management procedures and practices are designed to prevent or reduce the discharge of pollutants to stormwater from solid or construction waste by providing designated waste collection areas and containers, arranging for regular disposal, and training employees and subcontractors.

Suitable Applications

This BMP is suitable for construction sites where the following wastes are generated or stored:

1. Solid waste generated from trees and shrubs removed during land clearing, demolition of existing structures (rubble), and building construction.
2. Packaging materials including wood, paper, and plastic.
3. Scrap or surplus building materials including scrap metals, rubber, plastic, glass pieces, and masonry products.
4. Domestic wastes including food containers such as beverage cans, coffee cups, paper bags, plastic wrappers, and cigarettes,
5. Construction waste including brick, mortar, timber, steel and metal scraps, pipe and electrical cuttings, non-hazardous equipment parts. Styrofoam and other materials send transport and package construction materials.

Implementation:

The following steps will help keep a clean site and reduce stormwater pollution:

1. Select designated waste collection areas onsite.
2. Inform trash-hauling contractors that you will accept only watertight dumpsters for onsite use.
3. Inspect dumpsters for leaks and repair any dumpster that is not watertight.
4. Provide an adequate number of containers with lids or covers that can be placed over the container to keep rain out or to prevent loss of wastes when it is windy.
5. Plan for additional containers and more frequent pickup during the demolition phase of construction.
6. Collect site trash daily, especially during rainy and windy conditions.
7. Remove this solid waste promptly since erosion and sediment control devices tend to collect litter.
8. Make sure that toxic liquid wastes (used oils, solvents, and paints) and chemicals (acid, pesticides, additives, curing compounds) are not disposed of in dumpsters designed for construction debris.
9. Do not hose out dumpsters on the construction site. Leave dumpster cleaning to the trash hauling contractor.
10. Arrange for regular waste collection before containers overflow.
11. Clean up immediately if a container does spill.
12. Make sure that construction waste is collected, removed, and disposed of only at authorized disposal areas. Solid waste storage areas should be located in areas prone to flooding or ponding.
13. Locate solid waste dumpster a minimum of 50' away from storm water inlets or other drainage facilities.
14. Locate dumpster on stone or earth to minimize the potential for spills or leaks to drain immediately into a drainage facility.

Inspection and Maintenance:

1. Inspect and verify that activity-based BMPs are in place prior to the commencement of associated activities. While activities associated with the BMP are under way, inspect weekly to verify continued BMP implementation.
2. Inspect BMPs subject to non-stormwater discharge daily while non-stromwater discharges occur.
3. Inspect construction waste are regularly.
4. Arrange for regular waste collection.

SECTION D (Continued)

MATERIAL HANDLING AND SPILL PREVENTION PLAN

THE FOLLOWING PROCEDURES AND PRACTICES WILL HELP PREVENT UNNECESSARY SPILLS:

D3: CONCRETE WASHOUT

The following steps will help reduce stormwater pollution from concrete wastes:

1. Discuss the concrete management techniques described in the BMP (such as handling of concrete waste and washout) with the ready-mix concrete supplier before any deliveries are made.
2. Incorporate requirements for concrete waste management into material supplier and subcontractors' agreements.
3. Store dry and wet materials under cover, away from drainage areas.
4. Avoid mixing excess amounts of fresh concrete.
5. Perform washout of concrete trucks offsite or in designed areas only.
6. Do not wash concrete trucks into storm drains open ditches, dry detention basins, streets, or streams.
7. Do no allow excess concrete to be dumped onsite, except in designated areas.

For onsite washout:

1. Locate washout areas at least 50 feet from storm drains, open ditches, or water bodies.
2. Do not allow runoff from this area by constructing a temporary pit or bermed area large enough for liquid and solid waste.
3. Wash out wastes into the temporary pit where the concrete can set, be broken up, and then disposed properly.
4. Avoid creating runoff by directing water to a bermed or level area when washing concrete in order to remove fine particles and expose the aggregate.
5. Do not wash sweepings from exposed aggregate concrete into the street or storm drain. Collect and return sweepings to aggregate base stockpile or dispose in the trash.

D4: VEHICLE MAINTENANCE AREAS

Purpose- To prevent spills during the normal maintenance of construction machinery.

Implementation- Where and when feasible, maintenance shall be preformed offsite in covered facility with an impervious floor.
1. Use a dedicated site for machinery maintenance
2. Site the maintenance area at least 50 feet from storm water inlets or water bodies
3. Maintain clean up materials close at hand. Utilize drip pans and absorbent pads to prevent oils from reaching the soil surface.
4. Inspect equipment daily for leaks or worn hoses. Repair or replace to prevent onsite spills
5. Properly dispose of all fluids removed or spilled from machinery.

D5: FLUIDS, PAINTS, SOLVENTS AND OTHER CHEMICALS-STORAGE & USE

Purpose- To prevent spills during the use and storage of the materials

Implementation-
1. Store materials in their original containers
2. Maintain safety data sheets on all products
3. Store materials in a weather proof/vandal resistant locker or building
4. Keep materials away from flammable sources
5. Provide and read instructions for the proper use and storage of all materials
6. For bulk material stored onsite, provide diking or double containment in case of leaks or failures.
7. No washout of solvent from paint supplies should be done near or into a storm water inlet or other drainage facility.

D6: DISPOSAL OF SEDIMENT-LADEN WATER

Purpose- To prevent the purposeful discharge of sediment-laden water into waters of the United States.

Implementation-
1. The sediment and any other pollutant from all pumping or dewatering operations that discharge into storm sewers, wetlands, drainage ways or water bodies must be removed from the water before it's discharged.
2. A suitable practice is needed at the discharge to allow the suspended solids to be removed from the water column. Slow moving water and time are needed components for an effective practice. Mechanical filters and chemical flocculants can do an excellent job of removing the fine materials.
3. Sediment removal pumping bags may be used at the outlet of a pump. The bags must be sized appropriately for the amount of flow. The practice needs to be installed on erosion resistant surfaces. The outlet of the pumping bag must be erosion resistant to prevent additional sedimentation.
4. Pumping operations that are moving clean water through a site are not required to have a pumping bag or similar device at the outlet. The point of discharge should be protected to prevent soil erosion.

SECTION D (Continued)

POTENTIAL POLLUTANT SOURCES & SUGGESTED BEST MANAGEMENT PRACTICES

POTABLE WATER LINE FLUSHING:

1. Capture and re-use water on site for dust control.
2. Capture and direct water to area located well away from storm drain system for infiltration and evaporation.
3. Capture and treat water (using methods approved by responsible local agency) before discharging
to storm drain.
4. Completely cover all storm drain inlets (rubber mats or similar) during flushing operations where highly chlorinated water can get into street and gutters.
5. Capture ponded water and handle using one of above BMPs.

PORTABLE TOILETS:

1. Locate portable toilets away from gutters, storm drain inlets and waterways.
2. Place portable toilets on stable, flat surface pad not prone to flooding or water ponding.
3. Anchor portable toilets to prevent blowing over during windstorms.

INSTALLATION & CLEANING OF THE FOLLOWING MATERIALS:
CONCRETE, MASONRY, STUCCO & PLASTER (ALKALINE/LIMESTONE/CHALK PRODUCTS)

Use high pressure water, and avoid use of detergents and acids.
1. When acids are necessary (to clean discolored concrete, for instance), use one of following:
a. Capture and direct water to area located well away from storm drain system for infiltration and evaporation.
b. Capture and treat water before discharging to sanitary sewer (need agency approval).
2. Completely cover all storm drain inlets (rubber mats or similar) during concrete and similar operations where polluted water can get into street and gutters. Capture ponded water and handle using one of above BMPs.
3. Conduct tool and equipment rinsing in marked, designated areas of the lot where there is no potential for water to enter storm drains.
4. Establish and properly sign designated concrete wash out areas for use by concrete trucks.
5. Educate concrete subcontractors and consider establishing incentives and/or penalties to ensure compliance.

ASPHALT

Avoid asphalt paving when storm events are imminent.

PETROLEUM PRODUCTS

1. Avoid storing these materials on site, if possible; otherwise, store these materials away from storm water.
2. Promptly clean up any spills
3. Properly contain and dispose of motor oil and other lubricants if vehicles are maintained on site.

PAINTING

1. Wash tools and equipment in marked, designated areas of the lot where there is no potential for water to enter storm drains.
2. Wash tools and equipment into sanitary sewer (may require agency approval).
3. Educate painting subcontractors and consider establishing incentives and/or penalties to ensure compliance.

CLEANING

1. Use high pressure washing with plain water whenever possible.
2. Use environmentally friendly cleaning products whenever possible.
3. Conduct cleaning and store cleaning chemicals in segregated areas where pollutants cannot enter the storm drain system.
4. Educate cleaning subcontractors and consider incentives/penalties to ensure compliance.

LANDSCAPING

1. Avoid using pesticides and herbicides.
2. Avoid on-site storage. If unavoidable, store all chemicals in original packaging material in covered, contained area.
3. Educate landscape subcontractors and consider establishing incentives and/or penalties to ensure compliance.
4. Avoid using fertilizers.
5. If unavoidable, apply fertilizers sparingly, and use only as component of seed mix for hydro seeding/hydraulic mulch operations.
6. Avoid on-site storage. If unavoidable, store all chemicals in original packaging material in covered, contained area.

TREATED WOOD

Cover treated wood stored on site as recommended for stockpiles. See stockpiles.

FOUNDATION PESTICIDE APPLICATION

1. Do not spray foundations during or before predicted rain events.
2. Restrict spraying to inside footprint of building.

SOIL AMENDMENTS & DUST CONTROL

For dust control:
1. Consider using clean or recycled site water whenever possible. Protect storm drains and do not allow water to flow from soil areas to storm drains.

For soil amendments:
1. Do not over-apply the products.
2. Avoid on-site storage. If unavoidable, store all chemicals in original packaging material in covered, contained area.
3. See BMPs for stockpiled materials, end of table.
4. Dispose of leftover unused product properly and quickly after use.
5. Check with manufacturer to obtain documentation that shows that proper use of product(s) will not have adverse ecological affects.

STOCK PILES

Year Round:
1. Locate stockpiled materials away from concentrated flows of stormwater and other water. Surround stockpiles left overnight with a temporary berm (e.g., sandbags) that will not allow water to run into the pile.

Rainy Weather:
1. During rainy season or when rain is predicted during dry season:
cover all stockpiled materials left overnight (in addition to berms)

UTILITY STATEMENT:

THE UTILITIES INDICATED ON THESE PLANS AND ON THE SURVEY HAVE BEEN LOCATED FROM FIELD SURVEY INFORMATION. THE SURVEYOR/ENGINEER MAKES NO GUARANTEES THAT THE UNDERGROUND UTILITIES COMPRISE ALL SUCH UTILITIES IN THE AREA, EITHER IN-SERVICE OR ABANDONED. THE SURVEYOR DOES CERTIFY THAT THEY ARE LOCATED AS ACCURATELY AS POSSIBLE FROM INFORMATION AVAILABLE. THE SURVEYOR/ENGINEER HAS NOT PHYSICALLY LOCATED THE UNDERGROUND UTILITIES.

811
Know what's **below.**
Call before you dig.

ELEMENTS
Engineering, LLC
6213 Behner Way
Indianapolis, IN 46250
(317) 490-7054

THE ANDERSON CORPORATION
301 S. UNION STREET
WESTFIELD, IN 46074

NORTHWALK RESIDENTIAL COMMUNITY
740 N. UNION STREET
WESTFIELD, IN 46074

EROSION CONTROL
(SWPPP) NOTES

JENNIFER L. ROBERTS
REGISTERED
PE19900150
STATE OF
INDIANA
PROFESSIONAL ENGINEER
APPROVAL PENDING
NOT FOR CONSTRUCTION

DATE:

DWN BY:	CC
CHKD. BY:	JR
SCALE:	AS NOTED
DATE:	5/9/2014

PROJECT NUMBER
13-76-001

DESIGN PHASE
PLAN REVIEW

PLAN NUMBER
C402

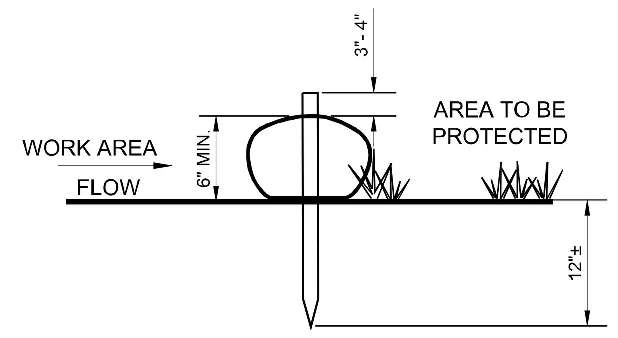

NOTES:

COMPOSTED PRODUCT: COMPOST USED FOR SOCK TO BE WEED FREE AND DERIVED FROM A WELL-DECOMPOSED SOURCE OF ORGANIC MATTER. THE COMPOST SHALL BE PRODUCED USING AN AEROBIC COMPOSTING PROCESS MEETING CFR 503 REGULATIONS, INCLUDING TIME AND TEMPERATURE DATA INDICATING EFFECTIVE WEED SEED, PATHOGEN AND INSECT LARVAE KILL. THE COMPOST SHALL BE FREE OF ANY REFUSE, CONTAMINANTS OR OTHER MATERIALS TOXIC TO PLANT GROWTH. NON-COMPOSTED PRODUCTS WILL NOT BE ACCEPTED. TEST METHODS FOR THE ITEMS BELOW SHOULD FOLLOW USCC TMECC GUIDELINES FOR LABORATORY PROCEDURES:

A. PH – 5.0–8.0 IN ACCORDANCE WITH TMECC 04.11–A, "ELECTROMETRIC PH DETERMINATIONS FOR COMPOST"

B. PARTICLE SIZE – 99% PASSING A 2" SIEVE AND A MINIMUM OF 60% GREATER THAN THE 3/8" SIEVE, IN ACCORDANCE WITH TMECC 02.02–B, "SAMPLE SIEVING FOR AGGREGATE SIZE CLASSIFICATION". (NOTE– IN THE FIELD, PRODUCT COMMONLY IS BETWEEN ½" AND 2" PARTICLE SIZE.)

C. MOISTURE CONTENT OF LESS THAN 60% IN ACCORDANCE WITH STANDARDIZED TEST METHODS FOR MOISTURE DETERMINATION.

D. MATERIAL SHALL BE RELATIVELY FREE (<1% BY DRY WEIGHT) OF INERT OR FOREIGN MAN MADE MATERIALS.

** SEE CITY OF WESTFIELD DETAILS FOR SILT FENCE. COMPOST "SOCK" IS AN ALTERNATE MATERIAL.

EC09 COMPOST "SOCK" DETAIL (REPLACES SILT FENCE**)
NOT TO SCALE
filename: EC09.dwg

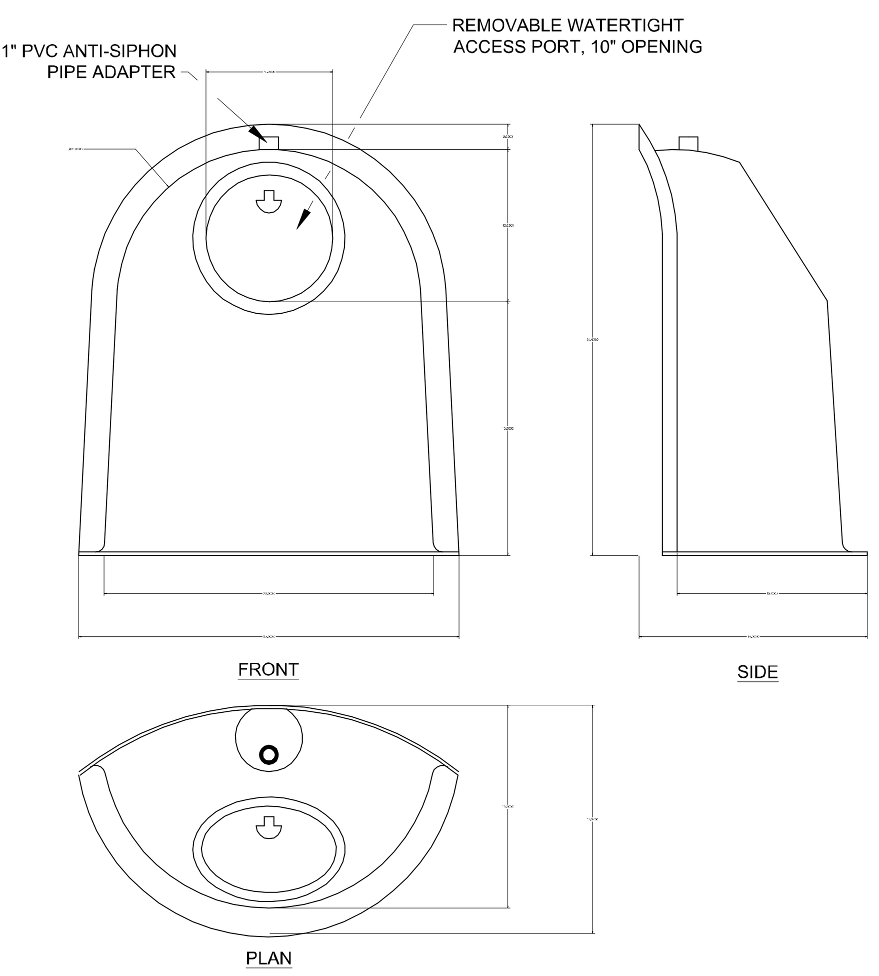

DESIGNED TO FIT 48"-60" DIAM. STRUCTURES

RECOMMENDED SUMP DEPTH 2.5 TO 3X OUTLET PIPE I.D.

U.S.PATENT #6126817 ADDITIONAL PATENTS PENDING

BMP, INC.
53 MT. ARCHER ROAD, LYME, CT. 06371
(800) 504-8008 FAX: (860)434-3195

DESCRIPTION	DATE	SCALE
24R SNOUT OIL & DEBRIS STOP	09/13/99	NONE
	DRAWING NUMBER	24R

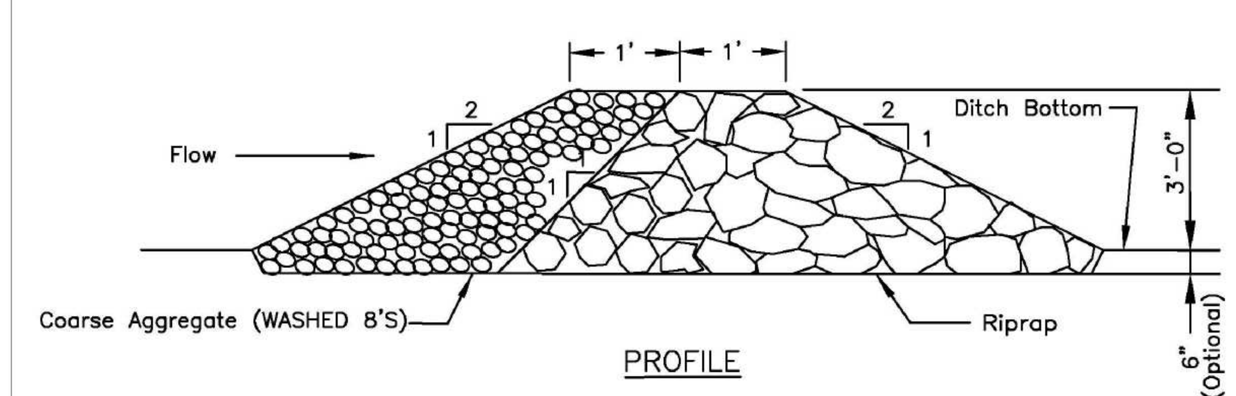

PROFILE

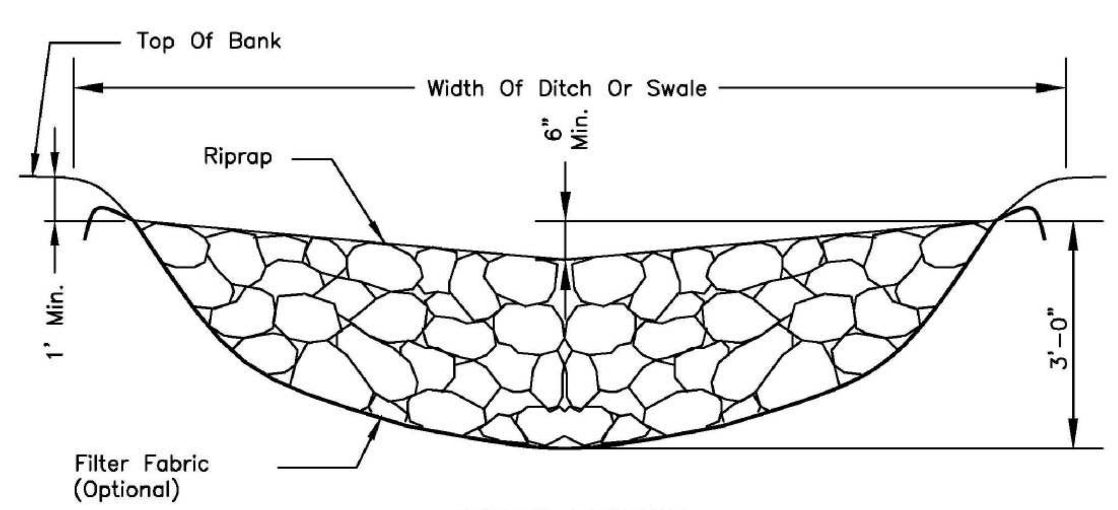

CROSS SECTION
DOWNSTREAM VIEW

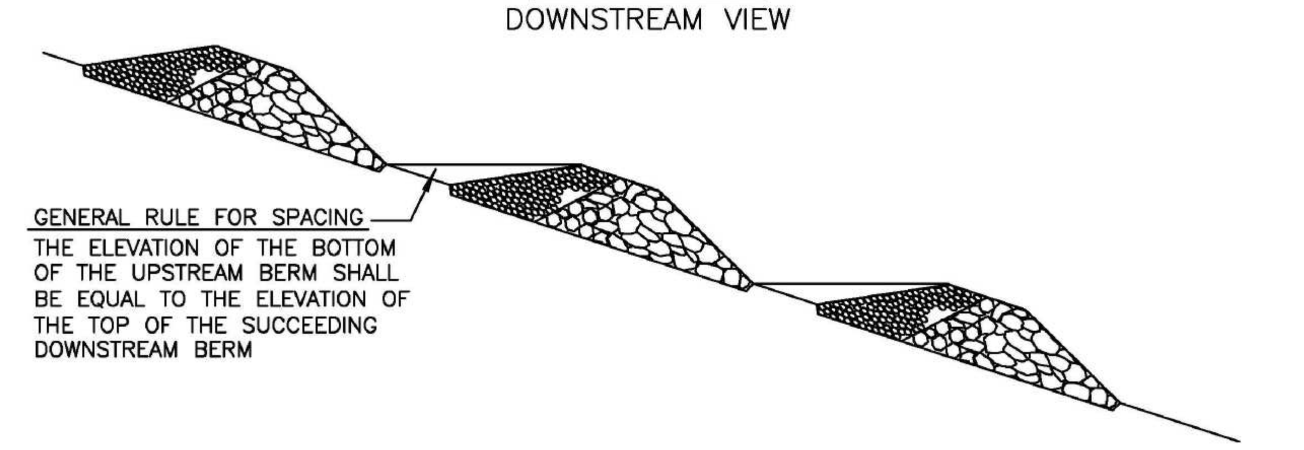

GENERAL RULE FOR SPACING
THE ELEVATION OF THE BOTTOM OF THE UPSTREAM BERM SHALL BE EQUAL TO THE ELEVATION OF THE TOP OF THE SUCCEEDING DOWNSTREAM BERM

ROCK CHECK DAM – RIPRAP

CITY OF Westfield INDIANA

NEIL B. VANTREES REGISTERED No. 10809092 STATE OF INDIANA PROFESSIONAL ENGINEER

CITY OF WESTFIELD, INDIANA

Neil B. VanTrees 4/1/13
DATE

FIGURE EC-7

SEED TOLERANCE DATA

	SOIL CONDITION			SHADE TOLERANCE	CLOSE MOWING TO 2-3 1/2 INCHES	TRAMPING TOLERANCE	FERTILITY NEEDS	WINTER HARDINESS	FLOODING TOLERANCE (DAYS)	MATURE HEIGHT (INCHES)	EMERGENCE TIME (DAYS)	SOIL TOLERANCE		
	WET	NORM	DRY									GEN.	SOIL	SPRAY
CREEPING RED FESCUE FESTUCA RUBRA	2	1	2	1	1	1	MED.	1	20-25	12-18	7-21			S
KENTUCKY BLUEGRASS POA PROTINSIS	2	1	2	1	1	1	MED.	1	20-35	12-18	10-20			MT
TALL FESCUE FESTUCA L. ARUNDINACEA	2	1	1	1	1	1	LOW	1	24-35	24-36	5-14		T	
PERENNIAL RYEGRASS LOLLUM PERENNE	2	1	2	x	1	2	MED. HIGH	2	15-20	12-18	5-10		MT	
CROWNVETCH CORONILLA VARLA	x	1	1	2	x	x	LOW	1	5-10	24	14-21	T		
RED CLOVER TRIFOLIUM PROTENSE	x	1	x	2	x	x	MED.	1	7-10	18	5-10	S	S	

RANKING:
1 = GOOD
2 = MEDIUM
x = NOT TOLERANT

SALT TOLERANCE (TO BOTH SOIL SALTS & SPRAY)
T = TOLERANCE
MT = MEDIUM TOLERANCE
S = SLIGHT TOLERANCE

SEEDING APPLICATION DATA

SPECIES	SEEDING RATE		SUITABLE pH	SITE SUITABILITY *		
	LBS/ACRE	LBS/1000 SQ. FT.		DROUGHTY	WELL DRAINED	WET
LEVEL AND SLOPING, OPEN AREAS						
1. TALL FESCUE	35	.8	5.5-8.3	2	1	2
2. TALL FESCUE	25	.6	5.5-8.3		1	
RED CLOVER	5	.12				
3. KENTUCKY BLUEGRASS	15	.4	5.8-7.5	2	1	
CREEPING RED FESCUE	15	.4				
STEEP BANKS AND CUTS						
4. TALL FESCUE	15	.4	5.8-7.5	2	1	2
KENTUCKY BLUEGRASS	25	.6				
5. TALL FESCUE	35	.8	5.5-8.3	2	1	
EMERALD CROWNVETCH**	10	.25				
LAWNS AND HIGH MAINTENANCE AREAS						
6. KENTUCKY BLUEGRASS	40	.9	5.8-7.5	2	1	
CREEPING RED FESCUE	40	.9				
7. PERENNIAL RYEGRASS (TURF TYPE)	170	4.0	5.0-7.5		1	
8. TALL FESCUE	170	4.0	5.5-8.3	2	1	2

* 1 - PREFERRED 2 - WILL TOLERATE ** INOCULATE WITH SPECIFIC INOCULANT.

SEEDBED PREPARATION:

1. APPLY LIME TO RAISE THE pH TO THE LEVEL NEEDED FOR SPECIES BEING SEEDED. APPLY 23 POUNDS OF 12-12-12 ANALYSIS FERTILIZER (OR EQUIVALENT) PER 1000 SQ. FT. (APPROXIMATELY 1000 POUNDS PER ACRE) OR FERTILIZE ACCORDING TO TEST. APPLICATION OF 150 LBS. OF AMMONIUM NITRATE ON AREAS LOW IN ORGANIC MATTER AND FERTILITY WILL GREATLY ENHANCE VEGETATIVE GROWTH.
2. WORK THE FERTILIZER AND LIME INTO THE SOIL TO A DEPTH OF 2-3 INCHES WITH A HARROW, DISK OR RAKE OPERATED ACROSS THE SLOPE AS MUCH AS POSSIBLE.

SEEDING:

1. SELECT A SEED MIXTURE BASED ON PROJECTED USE OF THE AREA (SEE PERMANENT SEED MIXTURE CHART), WHILE CONSIDERING BEST SEEDING DATES. IF PERMANENT SEEDING IS NOT PERMITTED, USE TEMPORARY SEEDING UNTIL PERMANENT SEEDING CAN BE APPLIED. IF TOLERANCES ARE A PROBLEM, SUCH AS SALT TOLERANCE OF SEEDINGS ADJACENT TO STREETS AND HIGHWAYS, SEE SEED TOLERANCE CHART.

TEMPORARY SEEDINGS

TYPE OF SEED	1000 SQ. FT.	ACRE	REMARKS
WHEAT OR RYE	3.5 LBS.	2 BU.	COVER SEED 1" TO 1 1/2" DEEP
SPRING OATS	2.3 LBS.	3 BU.	COVER SEED 1" DEEP
ANNUAL RYEGRASS	1 LB.	40 LB.	COVER SEED 1/4" DEEP

* NOT NECESSARY WHERE MULCH IS APPLIED.

TEMPORARY SEEDING DATES

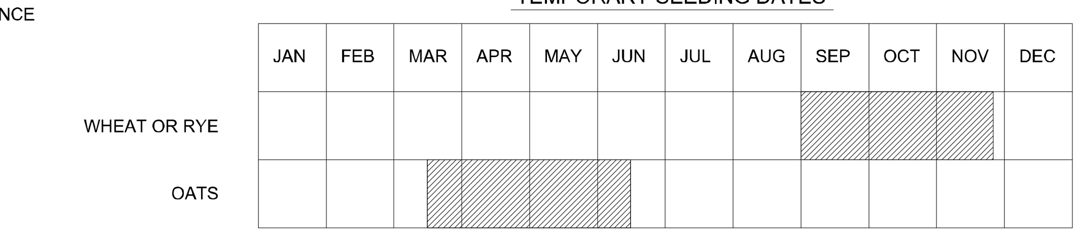

PER SPECIFICATION SECTION P-156, FROM DECEMBER 1 TO MARCH 14 AND JUNE 16 TO AUGUST 31, MULCHING ALONE SHALL BE USED TO STABILIZE THE SOIL.

SEE SPECIFICATION SECTION P-156 FOR ADDITIONAL EROSION CONTROL REQUIREMENTS.

PERMANENT SEEDING DATES

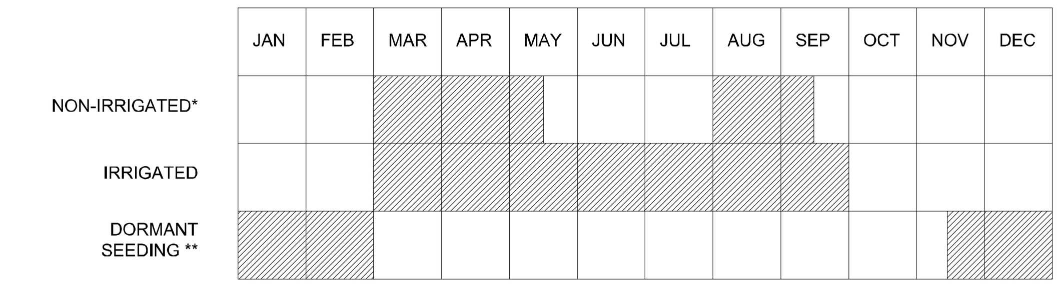

IRRIGATION NEEDED DURING THIS PERIOD. TO CONTROL EROSION AT TIMES OTHER THAN IN THE SHADED AREAS. USE MULCH.

* LATE SUMMER SEEDING DATES MAY BE EXTENDED 5 DAYS IF MULCH IS APPLIED.

** INCREASE SEEDING APPLICATION BY 50%.

EC04 SEEDING DETAIL
NOT TO SCALE
filename: EC04.dwg

EROSION CONTROL SCHEDULE

EROSION CONTROL MEASURE	MAINTENANCE	INSTALLATION SEQUENCE
STONE ENTRANCE	AS NEEDED	PRIOR TO CLEARING AND GRADING
COMPOST SOCK (SILT FENCE)	WEEKLY, AFTER STORM EVENTS AND AS NEEDED	PRIOR TO CLEARING AND GRADING
EXISTING INLET PROTECTION	WEEKLY, AFTER STORM EVENTS AND AS NEEDED	PRIOR TO CLEARING AND GRADING
TREE PROTECTION	WEEKLY, AFTER STORM EVENTS AND AS NEEDED	PRIOR TO CLEARING AND GRADING
TEMPORARY DIVERSIONS	WEEKLY, AFTER STORM EVENTS AND AS NEEDED	ALONG WITH ROUGH GRADING
TEMPORARY SEEDING	WATER AS NEEDED	AFTER ROUGH GRADING
PERMANENT SEEDING	WATER AS NEEDED	AFTER FINISH GRADING
NATIVE PLANT AREAS	WATER AS NEEDED	AFTER FINISH GRADING
EROSION CONTROL MATTING	WEEKLY, AFTER STORM EVENTS AND AS NEEDED	AFTER FINISH GRADING
DITCH PROTECTION	WEEKLY, AFTER STORM EVENTS AND AS NEEDED	AFTER FINISH GRADING
INLET PROTECTION	WEEKLY, AFTER STORM EVENTS AND AS NEEDED	AFTER EACH INLET IS PLACED
REMOVAL OF TREE PROTECTION	N/A	AFTER PERMANENT SEEDING
REMOVAL OF DITCH PROTECTION	N/A	AFTER ALL AREAS DRAINING TO THESE AREAS ARE STABILIZED
REMOVAL OF INLET PROTECTION	N/A	AFTER ALL AREAS DRAINING TO THESE AREAS ARE STABILIZED

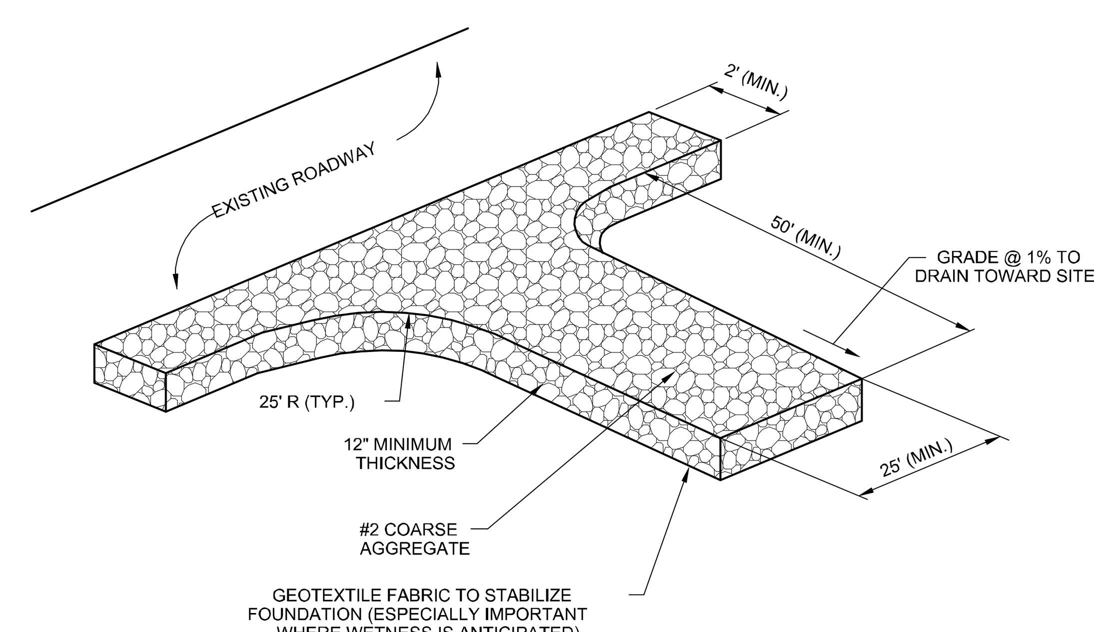

EC01 TEMPORARY CONSTRUCTION ENTRANCE DETAIL
NOT TO SCALE

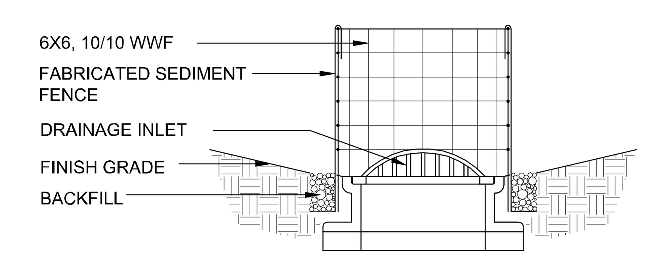

SECTION THROUGH SEDIMENT BARRIER

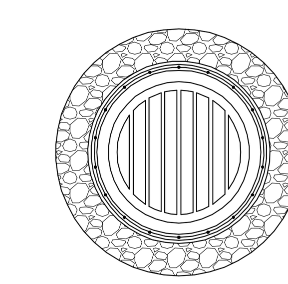

FABRICATED SEDIMENT BARRIER CONSISTING 6X6, 10/10 WELDED WIRE MESH FRAMEWORK COVERED WITH ONE OF THE FOLLOWING SEDIMENT FENCE PRODUCTS ENVIROFENCE (MIRAFI) PROPEX SILT STOP (AMOCO) ECONOFENCE (TERRATEX) OR EQUIVALENT

PLAN VIEW OF SEDIMENT BARRIER

EC11 ABOVE GRADE FILTER BASKET
Not to Scale

UTILITY STATEMENT:

THE UTILITIES INDICATED ON THESE PLANS AND ON THE SURVEY HAVE BEEN LOCATED FROM FIELD SURVEY INFORMATION. THE SURVEYOR/ENGINEER MAKES NO GUARANTEES THAT THE UNDERGROUND UTILITIES COMPRISE ALL SUCH UTILITIES IN THE AREA, EITHER IN-SERVICE OR ABANDONED. THE SURVEYOR DOES CERTIFY THAT THEY ARE LOCATED AS ACCURATELY AS POSSIBLE FROM INFORMATION AVAILABLE. THE SURVEYOR/ENGINEER HAS NOT PHYSICALLY LOCATED THE UNDERGROUND UTILITIES.

811 Know what's below. Call before you dig.

ELEMENTS Engineering, LLC
6213 Behner Way
Indianapolis, IN 46250
(317) 490-7054

THE ANDERSON CORPORATION
301 S. UNION STREET
WESTFIELD, IN 46074

NORTHWALK RESIDENTIAL COMMUNITY
740 N. UNION STREET
WESTFIELD, IN 46074

EROSION CONTROL (SWPPP) DETAILS

JENNIFER L. ROBERTS REGISTERED PE19900150 STATE OF INDIANA PROFESSIONAL ENGINEER
APPROVAL PENDING NOT FOR CONSTRUCTION

DATE:

DWN BY:	CC
CHKD. BY:	JR
SCALE:	AS NOTED
DATE:	5/9/2014

PROJECT NUMBER
13-76-001

DESIGN PHASE
PLAN REVIEW

PLAN NUMBER
C403

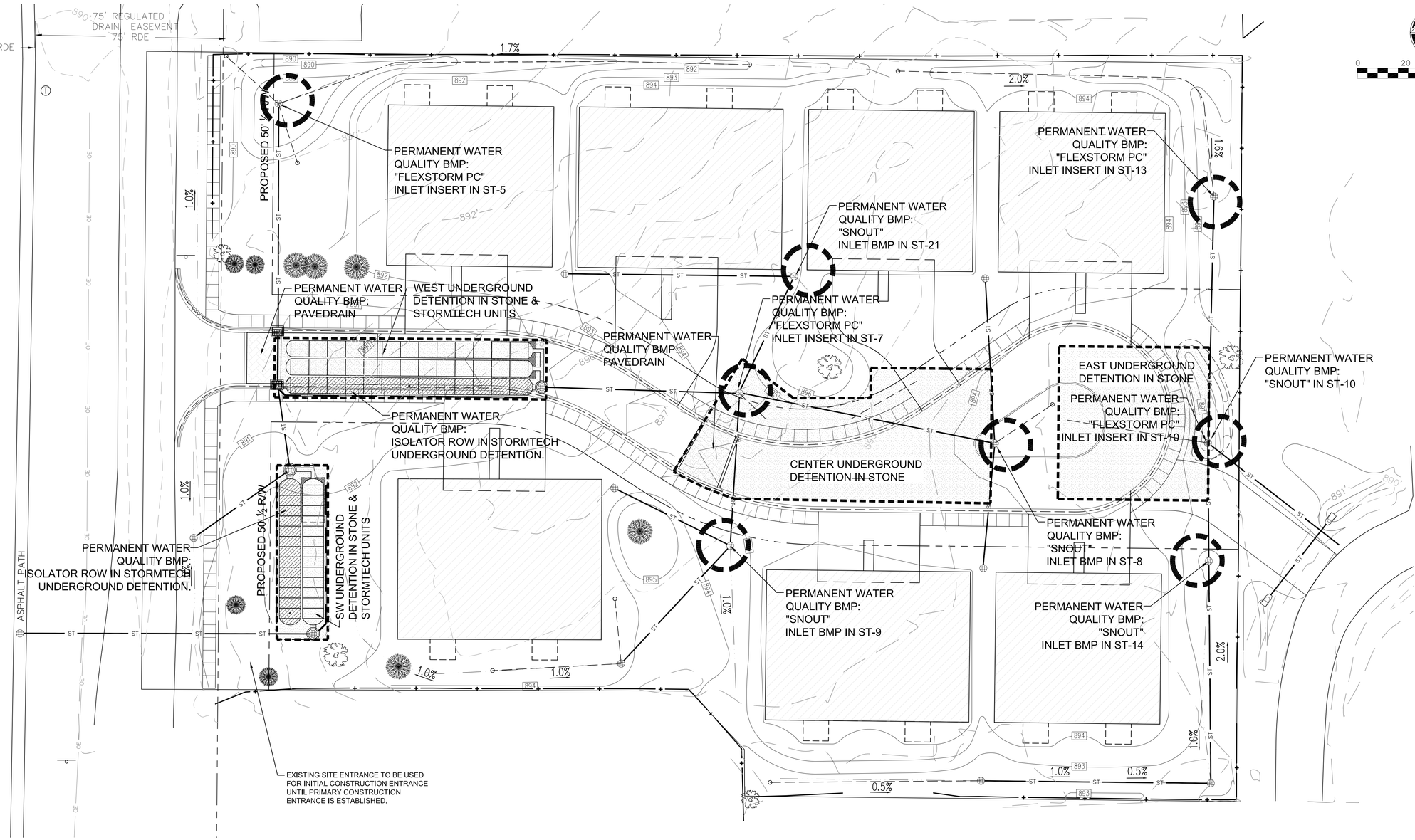

EROSION CONTROL LEGEND

- UNDERGROUND DETENTION AREAS (SEE ISOLATOR ROW BMP IN STORMTECH STRUCTURES)
- PAVE DRAIN BMP
- INLET BMP
- FLOW DIRECITON
- PROPOSED SWALE
- 950 PROPOSED CONTOUR
- 950 EXISTING CONTOUR

SEE OPERATIONS & MAINTENANCE MANUAL FOR INSPECTION & MAINTENANCE INFORMATION FOR PERMANDENT BMPs.

UTILITY STATEMENT:

THE UTILITIES INDICATED ON THESE PLANS AND ON THE SURVEY HAVE BEEN LOCATED FROM FIELD SURVEY INFORMATION. THE SURVEYOR/ENGINEER MAKES NO GUARANTEES THAT THE UNDERGROUND UTILITIES COMPRISE ALL SUCH UTILITIES IN THE AREA, EITHER IN-SERVICE OR ABANDONED. THE SURVEYOR DOES CERTIFY THAT THEY ARE LOCATED AS ACCURATELY AS POSSIBLE FROM INFORMATION AVAILABLE. THE SURVEYOR/ENGINEER HAS NOT PHYSICALLY LOCATED THE UNDERGROUND UTILITIES.

811 Know what's below. Call before you dig.

ELEMENTS
Engineering, LLC
6213 Behner Way
Indianapolis, IN 46250
(317) 490-7054

THE ANDERSON CORPORATION
301 S. UNION STREET
WESTFIELD, IN 46074

NORTHWALK RESIDENTIAL COMMUNITY
740 N. UNION STREET
WESTFIELD, IN 46074

POST-CONSTRUCTION SWPPP

JENNIFER L. RUSSELL — REGISTERED LANDSCAPE ARCHITECT — STATE OF INDIANA — PE10900016 — APPROVAL PENDING — NOT FOR CONSTRUCTION

DATE:

DWN BY:	CC
CHKD. BY:	JR
SCALE:	AS NOTED
DATE:	5/9/2014

PROJECT NUMBER
13-76-001

DESIGN PHASE
PLAN REVIEW

PLAN NUMBER
C404

D STORM INLET #7600
= 887.98'
. 12" RCP = 885.03'
. 15" RCP = 884.95'
. 12" RCP = 885.03

D STORM INLET #7603
= 887.62'
. 15" RCP = 884.95'
. 18" RCP = 884.39'
. 12" RCP = 884.73'

UND STORM INLET #7604
= 887.31'
. N. 18" RCP = 883.46'
. S. 18" RCP = 883.31'
. W. 12" RCP = (INACCESSIBLE)

TOP OF CMP
INV. = 888.65

TOP OF CMP
INV. = 888.78

75' REGULATED
DRAIN EASEMENT
75' RDE

EXISTING
BUILDING
F.F.E.=890.03'

INSTR #200100072113
2.65 ACRES±

SHED

PARKING LOT

TERRACOTTA

PROPOSED 50' ½ R/W

20' D.& U.E.

10' U.E.

COMMON
AREA "A"
3315.9 SQ.FT.

PROPOSED BUILDING
PAD ONE
4095 SQ.FT.
65'x63'

PROPOSED BUILDING
PAD TWO
5040 SQ.FT.
80'x63'

PROPOSED BUILDING
PAD THREE
4410 SQ.FT.
65'x63'

PROPOSED BUILDING
PAD FOUR
4095 SQ.FT.
65'x63'

5' U.E.

30' D.& U.E.

ROUND STORM IN
T.C. = 891.18'
VERTICAL 6" PVC

20' U.E.

IRR. D.& U.E.

COMMON
AREA "B"
4169.1 SQ.FT.

22.4± ASPHALT PAVEMENT

UNION STREET

APPARENT EAST R/W
UNION STREET

ASPHALT PATH

PROPOSED 50' ½ R/W

COMMON
AREA "D"
4219.1 SQ.FT.

PROPOSED BUILDING
PAD FIVE
5040 SQ.FT.
80'x63'

PROPOSED BUILDING
PAD SIX
5040 SQ.FT.
80'x59'

PROPOSED BUILDING
PAD SEVEN
4095 SQ.FT.
65'x59'

COMMON
AREA "C"
3340.6 SQ.FT.

30' D.& U.E.

SANITARY MANHOLE #7535
T.C. = 889.53'
INV. N. 12" PVC = 879.43'
INV. S. 12" PVC = 879.53'

12" CMP
INV=890.81

12" CMP
INV=891.36

MAPLE LANE
50' R/W

STONE

WTR

G

T

E

SS

ST

W

OE

FO

TV

(3 X) 10"

11" 11" 11" 24" 10"

18"

20"

11"

12"

6"

30"

22"

12"

(#) SHEET KEYNOTES:

1. APPROXIMATE LOCATION OF EXISTING WATER MAIN. CONTRACTOR TO VERIFY LOCATION PRIOR TO BEGINNING CONSTRUCTION.
2. CONNECT TO EXISTING WATER MAIN WITH 6" STAINLESS STEEL TAPPING SADDLE AND VALVE.
3. PROPOSED 6" C900 PVC WATER MAIN.
4. PROPOSED 1" TYPE K COPPER WATER SERVICE LINE.
5. PROPOSED WATER METER PIT PER DETAIL W-11A.
6. CONNECT TO 6" WATER MAIN WITH A STAINLESS STEEL TAPPING SADDLE A 1" CORPORATION STOP FOR TYPE K COPPER WATER SERVICE LINE.
7. PROPOSED IRRIGATION SYSTEM CONNECTION PER DETAIL W-12.
8. PROPOSED FIRE HYDRANT PER DETAIL W-7.
9. PROPOSED TELEPHONE SERVICE.
10. PROPOSED ELECTRIC SERVICE.
11. PROPOSED GAS SERVICE.
12. TWO 2" SCHEDULE 40 PVC CONDUITS.

NOTE:
ALL EXISTING AND PROPOSED ABOVE GROUND UTILITIES (INCLUDING PEDESTALS) SHALL BE MOVED OUTSIDE OF THE PROPOSED RIGHT OF WAY.

UTILITY LEGEND

- INLET OR CATCH BASIN
- SEWER MANHOLE
- TELEPHONE MANHOLE
- WATER MANHOLE
- MANHOLE
- CLEANOUT
- AREA LIGHT
- UTILITY POLE WITH GUY WIRE
- UTILITY POLE WITH RISER
- FLAG POLE
- TRAFFIC POLE
- UTILITY PEDESTAL
- ELECTRIC METER
- ELECTRIC TRANSFORMER
- CONDITIONING UNIT
- UTILITY VALVE
- HYDRANT
- WELL
- WATER VALVE
- WATER METER
- E — OVERHEAD UTILITY LINES
- T V — UNDERGROUND TELEVISION
- E — UNDERGROUND ELECTRIC
- T — UNDERGROUND TELEPHONE
- FO — UNDERGROUND FIBER OPTIC
- W — UNDERGROUND WATER LINE
- UNDERGROUND STORM SEWER
- UNDERGROUND SANITARY SEWER
- EDGE OF WOODS

FOR UTILITY PLAN GENERAL NOTES, SEE SHEET C009

UTILITY STATEMENT:

THE UTILITIES INDICATED ON THESE PLANS AND ON THE SURVEY HAVE BEEN LOCATED FROM FIELD SURVEY INFORMATION. THE SURVEYOR/ENGINEER MAKES NO GUARANTEES THAT THE UNDERGROUND UTILITIES COMPRISE ALL SUCH UTILITIES IN THE AREA, EITHER IN-SERVICE OR ABANDONED. THE SURVEYOR DOES CERTIFY THAT THEY ARE LOCATED AS ACCURATELY AS POSSIBLE FROM INFORMATION AVAILABLE. THE SURVEYOR/ENGINEER HAS NOT PHYSICALLY LOCATED THE UNDERGROUND UTILITIES.

811 Know what's below. Call before you dig.

NORTH

0 20 40 60

1" = 20'

ELEMENTS
Engineering, LLC
6213 Behner Way
Indianapolis, IN 46250
(317) 490-7054

THE ANDERSON CORPORATION
301 S. UNION STREET
WESTFIELD, IN 46074

NORTHWALK RESIDENTIAL COMMUNITY
740 N. UNION STREET
WESTFIELD, IN 46074

UTILITY PLAN

JENNIFER L. REED
STATE OF INDIANA
10600178
PROFESSIONAL ENGINEER
APPROVAL PENDING
NOT FOR CONSTRUCTION

DATE:

DWN BY:	CC
CHKD. BY:	JR
SCALE:	AS NOTED
DATE:	5/9/2014

PROJECT NUMBER
13-76-001

DESIGN PHASE
PLAN REVIEW

PLAN NUMBER
C500

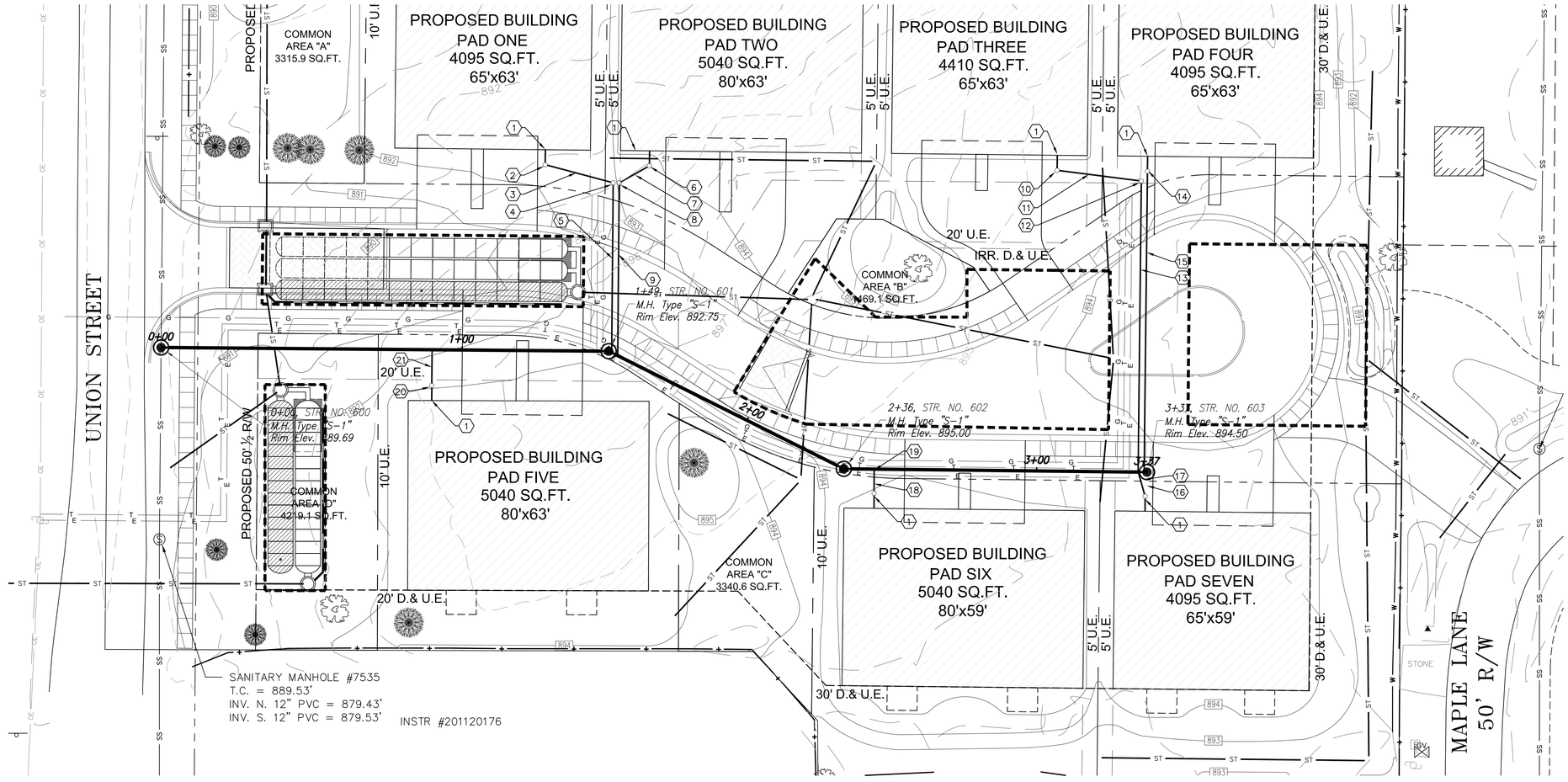

0 20 40 60
1" = 20'

SHEET KEYNOTES:

1. PROPOSED BUILDING CONNECTION. SEE ARCHITECTURAL PLAN FOR DETAILS.
2. SANITARY SEWER CLEANOUT PER DETAIL S-13. RIM= 892.75 INV= 889.00
3. 23' OF 6" SDR-35 PVC BUILDING SERVICE LATERAL @ 1.04% SLOPE
4. SANITARY SEWER CLEANOUT PER DETAIL S-15. RIM= 892.00 INV= 888.77
5. 56' OF 6" SDR-35 PVC BUILDING SERVICE LATERAL @ 1.04% SLOPE (MIN).
6. SANITARY SEWER CLEANOUT PER DETAIL S-13. RIM= 894.00 INV= 889.75
7. 11' OF 6" SDR-35 PVC BUILDING SERVICE LATERAL @ 4.0% SLOPE
8. SANITARY SEWER CLEANOUT PER DETAIL S-15. RIM= 892.00 INV= 889.31
9. 56' OF 6" SDR-35 PVC BUILDING SERVICE LATERAL @ 1.04% SLOPE (MIN).
10. SANITARY SEWER CLEANOUT PER DETAIL S-13. RIM= 894.75 INV= 890.75
11. 28' OF 6" SDR-35 PVC BUILDING SERVICE LATERAL @ 4.0% SLOPE
12. SANITARY SEWER CLEANOUT PER DETAIL S-15. RIM= 894.00 INV= 889.63
13. 97' OF 6" SDR-35 PVC BUILDING SERVICE LATERAL @ 1.04% SLOPE (MIN).
14. SANITARY SEWER CLEANOUT PER DETAIL S-13. RIM= 894.00 INV= 889.75
15. 99' OF 6" SDR-35 PVC BUILDING SERVICE LATERAL @ 1.04% SLOPE (MIN).
16. SANITARY SEWER CLEANOUT PER DETAIL S-13. RIM= 894.00 INV= 889.75
17. 5' OF 6" SDR-35 PVC BUILDING SERVICE LATERAL @ 1.04% SLOPE (MIN).
18. SANITARY SEWER CLEANOUT PER DETAIL S-13. RIM= 894.75 INV= 890.75
19. 5' OF 6" SDR-35 PVC BUILDING SERVICE LATERAL @ 1.04% SLOPE (MIN).
20. SANITARY SEWER CLEANOUT PER DETAIL S-13. RIM= 892.75 INV= 888.75
21. 12' OF 6" SDR-35 PVC BUILDING SERVICE LATERAL @ 1.04% SLOPE (MIN).

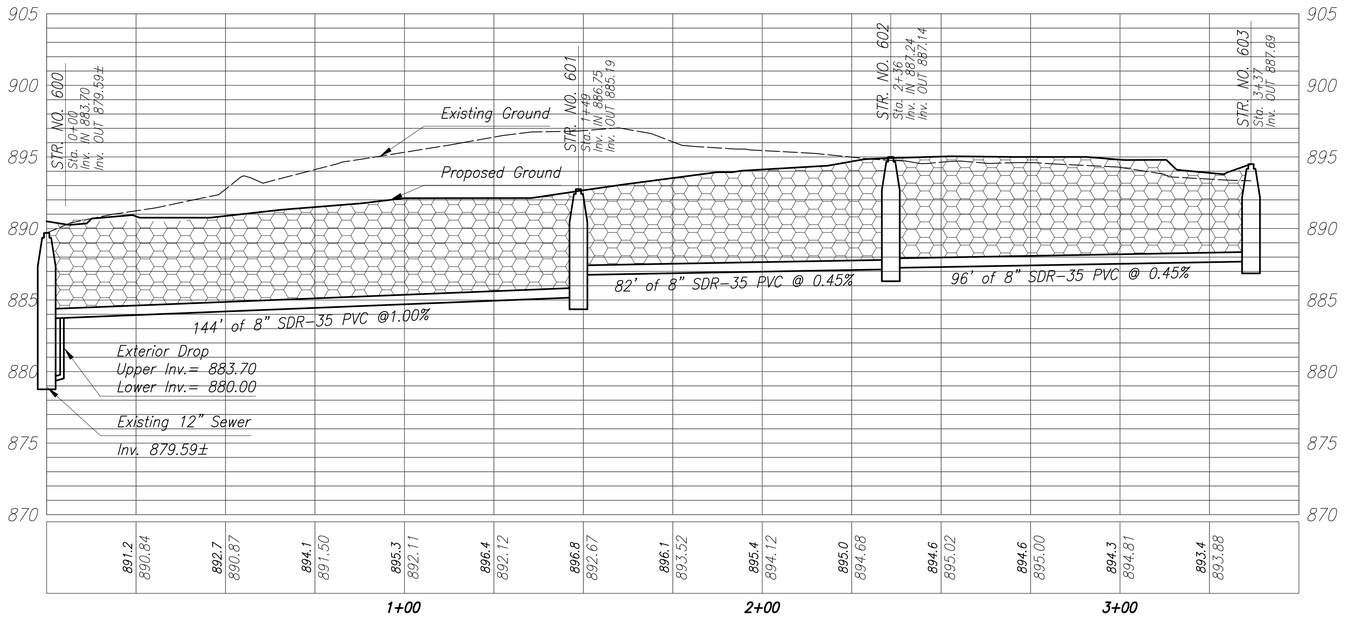

UTILITY LEGEND

- INLET OR CATCH BASIN
- SEWER MANHOLE
- TELEPHONE MANHOLE
- WATER MANHOLE
- MANHOLE
- CLEANOUT
- AREA LIGHT
- UTILITY POLE WITH GUY WIRE
- UTILITY POLE WITH RISER
- FLAG POLE
- TRAFFIC POLE
- UTILITY PEDESTAL
- ELECTRIC METER
- ELECTRIC TRANSFORMER
- CONDITIONING UNIT
- UTILITY VALVE
- HYDRANT
- WELL
- WATER VALVE
- WATER METER
- E — OVERHEAD UTILITY LINES
- TV — UNDERGROUND TELEVISION
- E — UNDERGROUND ELECTRIC
- T — UNDERGROUND TELEPHONE
- FO — UNDERGROUND FIBER OPTIC
- W — UNDERGROUND WATER LINE
- UNDERGROUND STORM SEWER
- UNDERGROUND SANITARY SEWER
- EDGE OF WOODS

FOR SANITARY SEWER GENERAL NOTES, SEE SHEET C009

UTILITY STATEMENT:

THE UTILITIES INDICATED ON THESE PLANS AND ON THE SURVEY HAVE BEEN LOCATED FROM FIELD SURVEY INFORMATION. THE SURVEYOR/ENGINEER MAKES NO GUARANTEES THAT THE UNDERGROUND UTILITIES COMPRISE ALL SUCH UTILITIES IN THE AREA, EITHER IN-SERVICE OR ABANDONED. THE SURVEYOR DOES CERTIFY THAT THEY ARE LOCATED AS ACCURATELY AS POSSIBLE FROM INFORMATION AVAILABLE. THE SURVEYOR/ENGINEER HAS NOT PHYSICALLY LOCATED THE UNDERGROUND UTILITIES.

811 Know what's below. Call before you dig.

ELEMENTS
Engineering, LLC
6213 Behner Way
Indianapolis, IN 46250
(317) 490-7054

THE ANDERSON CORPORATION
301 S. UNION STREET
WESTFIELD, IN 46074

NORTHWALK RESIDENTIAL COMMUNITY
740 N. UNION STREET
WESTFIELD, IN 46074

SANITARY SEWER PLAN AND PROFILE

JENNIFER L. ROBERTS — 10600012 — STATE OF INDIANA — REGISTERED LAND SURVEYOR
APPROVAL PENDING — NOT FOR CONSTRUCTION

DATE:

DWN BY:	CC
CHKD. BY:	JR
SCALE:	AS NOTED
DATE:	5/9/2014

PROJECT NUMBER
13-76-001

DESIGN PHASE
PLAN REVIEW

PLAN NUMBER
C501

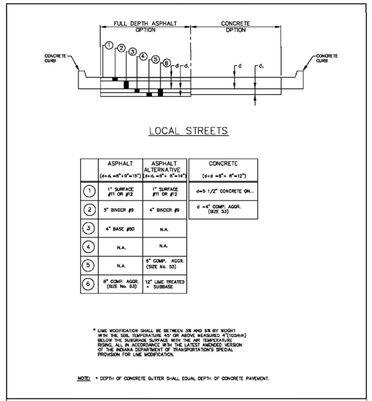

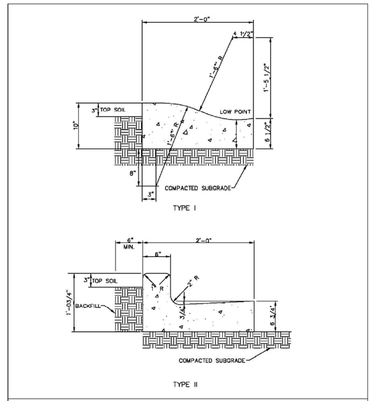

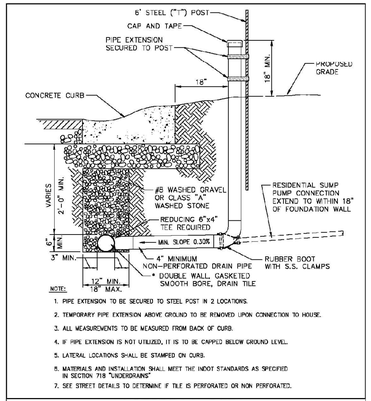

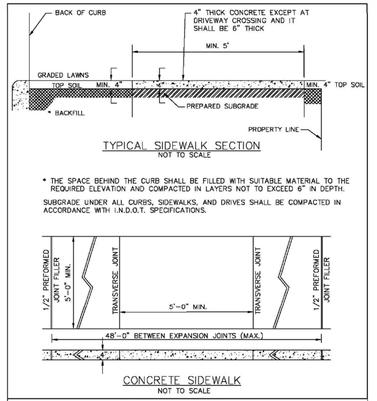

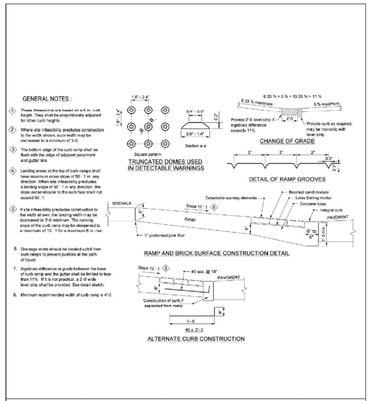

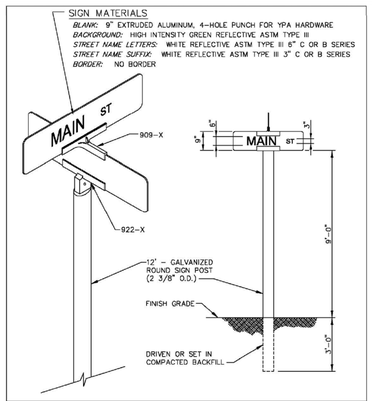

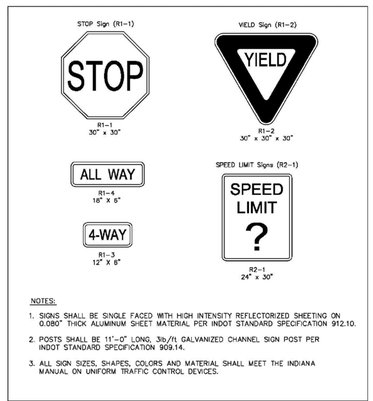

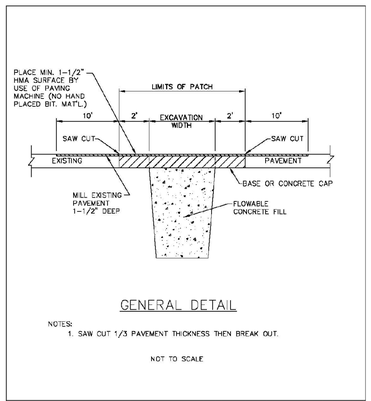

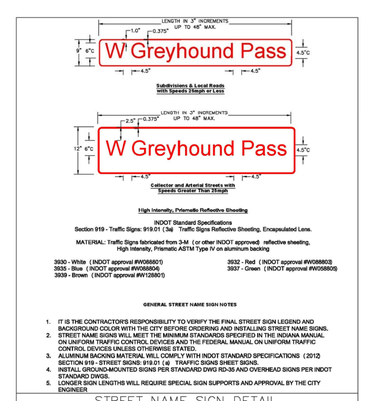

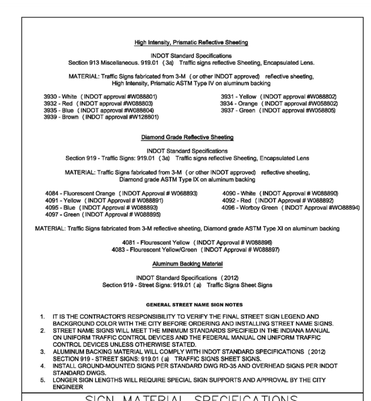

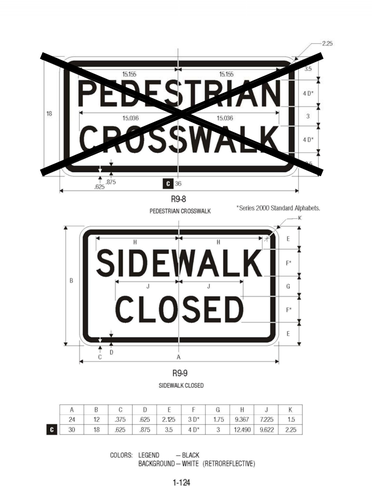

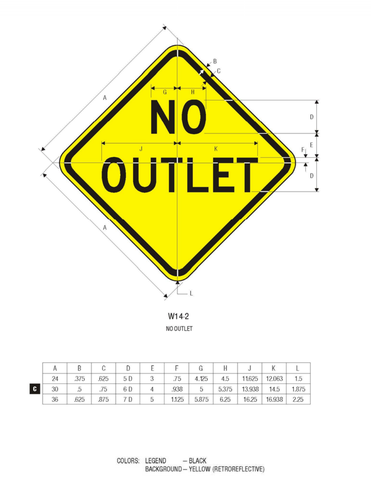

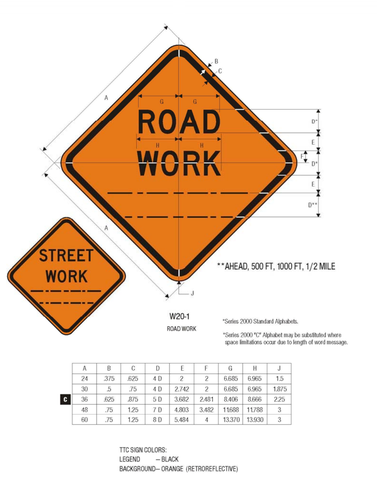

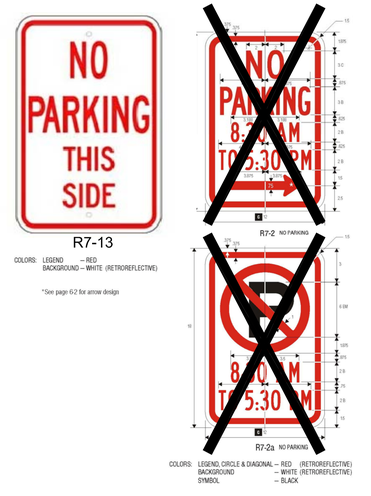

ELEMENTS
Engineering, LLC
6213 Behner Way
Indianapolis, IN 46250
(317) 490-7054

THE ANDERSON CORPORATION
301 S. UNION STREET
WESTFIELD, IN 46074

NORTHWALK RESIDENTIAL COMMUNITY
740 N. UNION STREET
WESTFIELD, IN 46074

SITE DETAILS

CITY OF WESTFIELD SPECIFICATIONS CAN BE FOUND AT: http://www.westfield.in.gov/egov/apps/document/center.egov?view=item;id=50

APPROVAL PENDING FOR CONSTRUCTION

DATE:

DWN BY:	CC
CHKD. BY:	JR
SCALE:	N/A
DATE:	4/4/2014

PROJECT NUMBER
13-76-001

DESIGN PHASE
PLAN REVIEW

PLAN NUMBER
C700

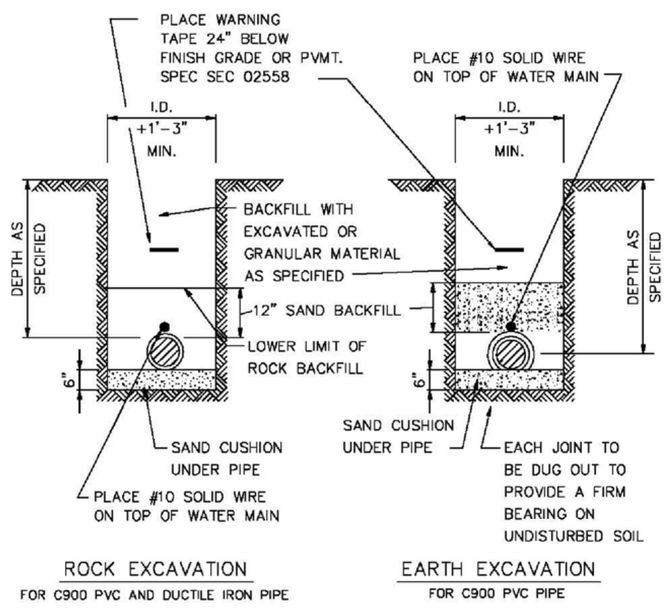

NOTE:
DUCTILE IRON PIPE OR HDPE (D11) PIPE DOES NOT REQUIRE SPECIAL BACKFILL UNLESS DIRECTED ON THE PLANS OR REQUIRED BY THE DIRECTOR OR THIER DESIGNEE.

WATER MAIN INSTALLATION DETAIL

TOWN OF WESTFIELD, INDIANA
Renée Lynn Goff 10/9/06 DATE FIGURE W-1

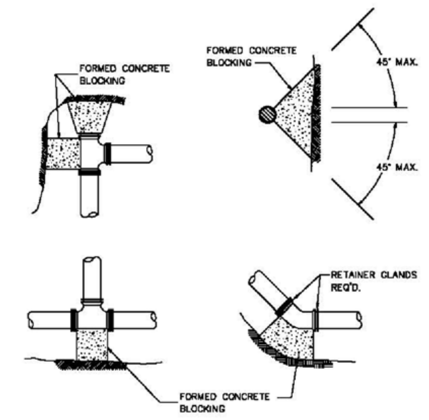

SIZE	TEE & PLUG	90° BEND	45° BEND	22-1/2° BEND	11-1/4° BEND
4"	2.0	2.5	1.5	1.0	1.0
6"	4.0	5.5	3.0	1.5	1.0
8"	6.5	9.0	5.0	2.5	1.5
10"	10.0	14.0	7.5	4.0	2.0
12"	14.0	20.0	11.0	5.5	3.0
14"	19.0	27.0	14.5	7.5	4.0
16"	25.0	35.0	19.0	10.0	5.0
18"	31.5	44.5	24.0	12.5	6.5
20"	40.0	54.0	31.0	16.5	7.5
24"	55.5	78.5	42.5	22.0	11.0
30"	86.5	122.0	66.0	34.0	17.0
36"	124.0	175.5	95.0	48.5	24.5
42"	168.0	237.5	128.5	65.5	33.0
48"	212.0	366.0	160.0	85.0	42.0

(AREA IN SQ. FT. REQUIRED FOR CONCRETE THRUST BLOCKING)

NOTE:
THE THRUST BLOCK AREAS ARE BASED ON A SOIL BEARING LOAD OF 2,000 LB./SQ. FT.
GREASE OR PLACE A LAYER OF VISQUEEN ON ALL WATER MAIN SURFACES PRIOR TO PLACEMENT OF CONCRETE

THRUST BLOCK DETAIL

TOWN OF WESTFIELD, INDIANA
Renée Lynn Goff 10/9/06 DATE FIGURE W-2

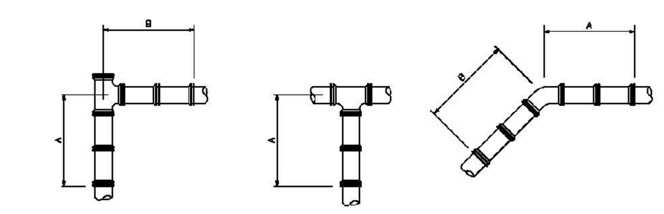

NOTE:
THE LENGTHS OF PIPE WITH RESTRAINED JOINTS ARE BASED ON A COMPACTED SILTY SOIL SURROUNDING THE PIPE

	A		B		
SIZE	TEE & PLUG	90° BEND	45° BEND	22-1/2° BEND	11-1/4° BEND
6"	12'-0"	17'-0"	10'-0"	6'-0"	3'-0"
8"	16'-0"	22'-0"	13'-0"	8'-0"	4'-0"
10"	19'-0"	27'-0"	16'-0"	9'-0"	5'-0"
12"	23'-0"	32'-0"	19'-0"	11'-0"	6'-0"
14"	26'-0"	36'-0"	21'-0"	12'-0"	7'-0"
16"	29'-0"	41'-0"	24'-0"	14'-0"	8'-0"
18"	32'-0"	45'-0"	26'-0"	15'-0"	8'-0"
20"	35'-0"	50'-0"	29'-0"	16'-0"	9'-0"
24"	41'-0"	58'-0"	34'-0"	19'-0"	10'-0"
30"	50'-0"	70'-0"	40'-0"	22'-0"	12'-0"
36"	58'-0"	82'-0"	45'-0"	26'-0"	14'-0"
42"	66'-0"	93'-0"	52'-0"	29'-0"	15'-0"

(LENGTH IN FEET REQUIRED FOR RESTRAINING JOINTS)

RESTRAINED JOINT DETAILS

TOWN OF WESTFIELD, INDIANA
Renée Lynn Goff 10/9/06 DATE FIGURE W-3

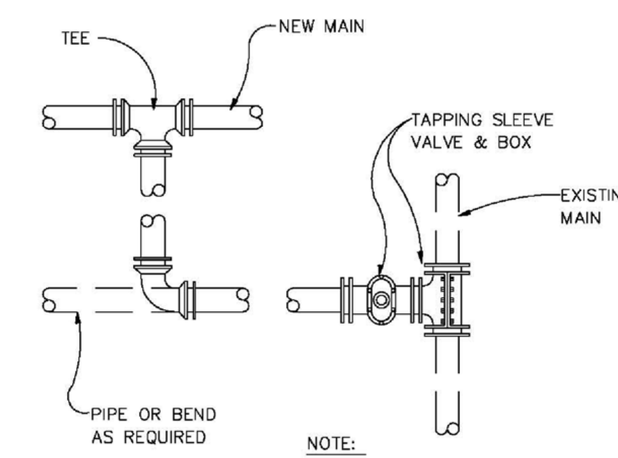

NOTE:
1. BENDS & FITTINGS AS REQUIRED SEE PLAN SHEETS FOR DETAILS
2. SEE FIGURES W-2 & W-3 FOR THRUST BLOCK AND RESTRAINED JOINT DETAILS.

CONNECTION TO EXISTING MAIN

TOWN OF WESTFIELD, INDIANA
Renée Lynn Goff 10/9/06 DATE FIGURE W-5

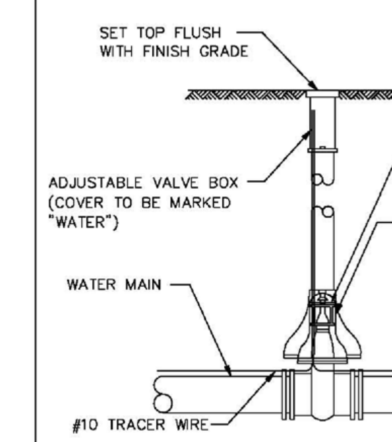

VALVES 3" AND LARGER SHALL BE FULL DUCTILE IRON BODY, NON-RISING STEM, FUSION BOND EPOXY COATED GATE VALVES. VALVES SHALL BE RESILIENT SEATED GATE VALVES AND SHALL MEET THE REQUIRMENTS OF ANSI/AWWA C-509 AND SHALL HAVE MECH. JOINTS AND ACCESSORIES SHALL MEET THE REQUIREMENTS OF ANSI/AWWA C111/A21.11

GATE VALVE AND BOX

TOWN OF WESTFIELD, INDIANA
Renée Lynn Goff 10/9/06 DATE FIGURE W-6

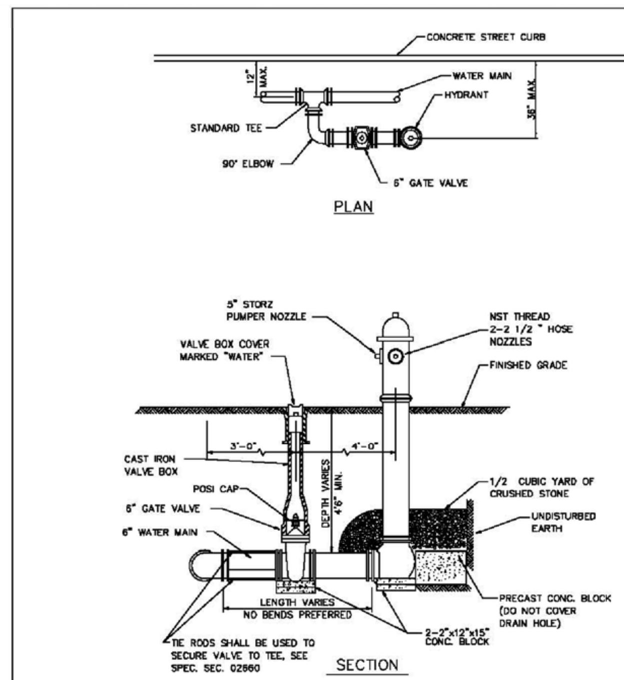

NOTE:
1. HYDRANTS SHALL BE THE MUELLER CENTURION, AS MANUFACTURED BY THE MUELLER CO. OR THE WATEREUS PACER, AS MANUFACTURED BY THE WATEREUS CO.
2. INTEGRAL CAP NUT AND LOWER WASHER SHALL BE EPOXY COATED.
3. SHOE SHALL BE FUSION BONDED EPOXY COATED INSIDE AND OUT.
4. WESTFIELD FIRE HYDRANTS SHALL BE MAB FIRE PROTECTION RED (7068) NOBLESVILLE FIRE HYDRANTS SHALL BE MAB CAUTION YELLOW (7077)

FIRE HYDRANT DETAILS

TOWN OF WESTFIELD, INDIANA
Renée Lynn Goff 10/9/06 DATE FIGURE W-7

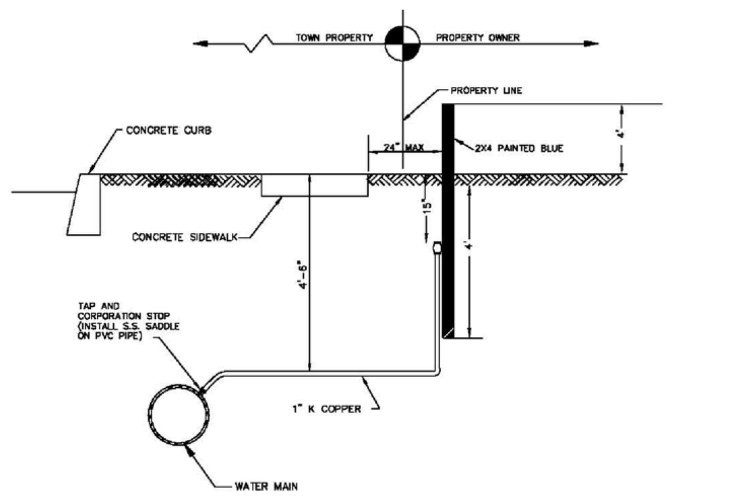

NOTE:
CONTRACTOR SHALL FURNISH AND INSTALL ALL NECESSARY MATERIALS TO PROVIDE A NEW WATER SERVICE. AS SHOWN IN THIS DETAIL

PART NUMBER FOR TERMINATING SERVICE LINE			
PART DESCRIPTION	FORD METER BOX CO.	MUELLER CO.	A.Y. MCDONALD MFG. CO.
SHUT-OFF VALVE	B44-444a (1")	B-25172 (1")	6100Q (1")

DOUBLE WATER SERVICE DETAIL

TOWN OF WESTFIELD, INDIANA
Renée Lynn Goff 10/9/06 DATE FIGURE W-11

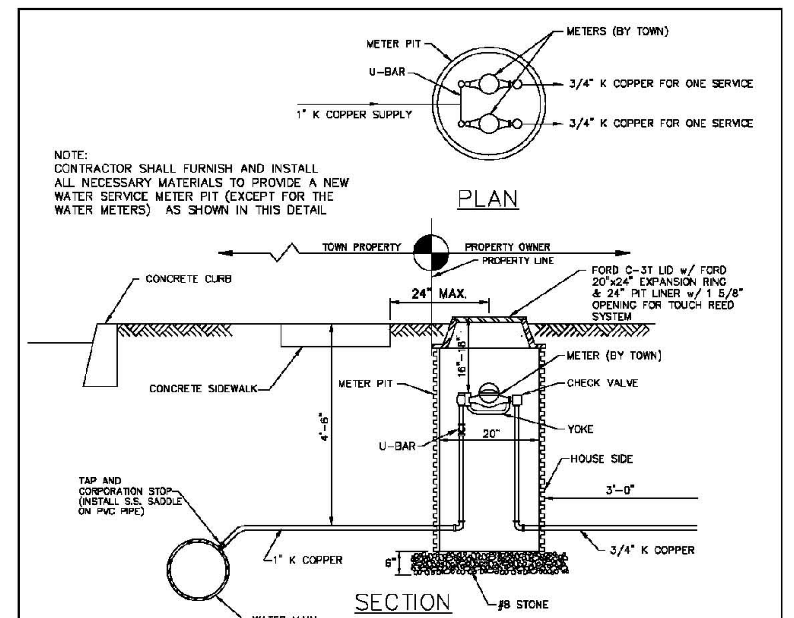

NOTE:
CONTRACTOR SHALL FURNISH AND INSTALL ALL NECESSARY MATERIALS TO PROVIDE A NEW WATER SERVICE METER PIT (EXCEPT FOR THE WATER METERS) AS SHOWN IN THIS DETAIL

ITEMS SUPPLIED & INSTALLED BY CONTRACTOR	PART NUMBERS (FOR 3/4" SERVICE)			
	FORD METER BOX CO.	MUELLER CO.	A.Y. MCDONALD MFG. CO.	VESTAL
YOKE	Y502	H-5020.5/8"	14-2	
ANGLE BALL VALVE	BA91-323W	B-24276	AY4642BYQ¾x02	
CHECK VALVE	HA 94-323a	H-14245	12-3YQ-33	
FRAME & COVER	NO. C-3T	TYLER MODEL 6150	74M3CT	32-262
U-BAR	U8843-7.5/C14-44Q	H-15363 1x3/4x7.5	08UQM1x¾x7.5	

3/4" – DUAL WATER METER AND PIT DETAIL (FOR RESIDENTIAL)

TOWN OF WESTFIELD, INDIANA
Renée Lynn Goff 10/9/06 DATE FIGURE W-11a

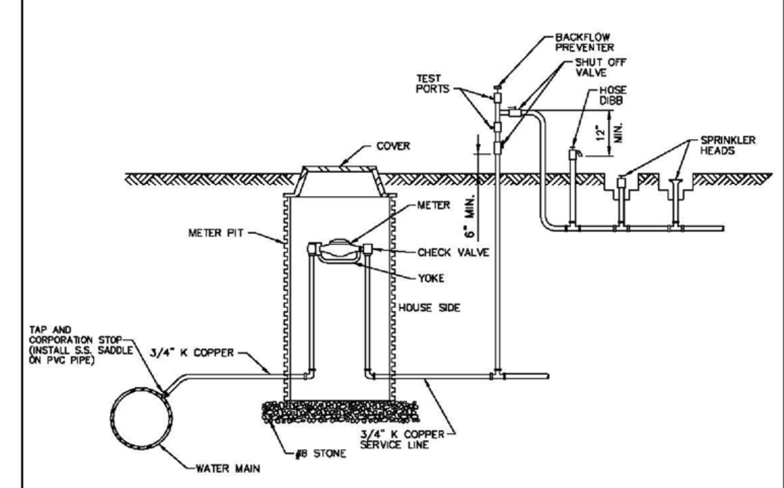

IRRIGATION SYSTEM CONNECTION DETAIL (RESIDENTIAL)

TOWN OF WESTFIELD, INDIANA
Renée Lynn Goff 10/9/06 DATE FIGURE W-12

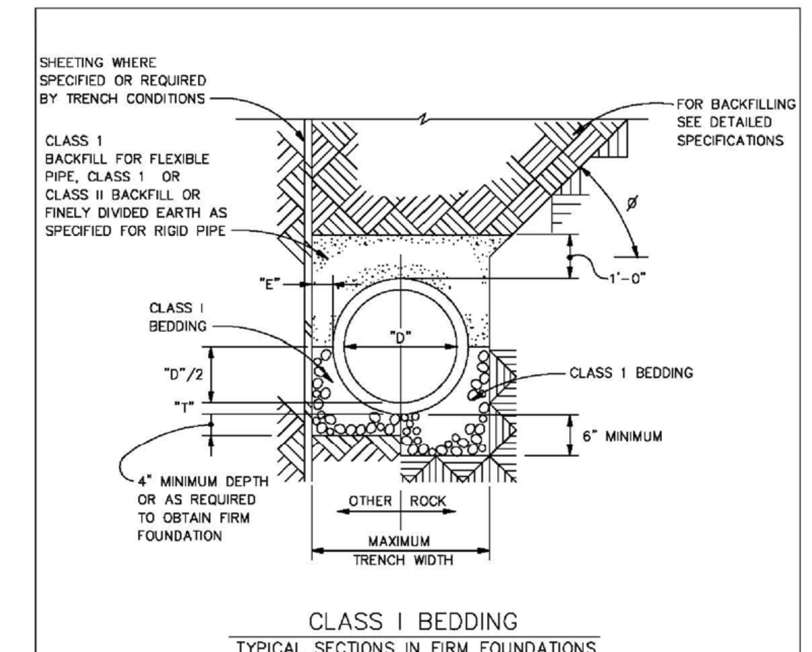

CLASS I BEDDING
TYPICAL SECTIONS IN FIRM FOUNDATIONS

NOTES:
1. SLOPE ANGLE, **' ,SHALL BE LESS THAN THE FRICTION ANGLE OF THE EXCAVATED MATERIAL.
2. "D"= NOMINAL PIPE SIZE.
3. "T"= PIPE WALL THICKNESS.

PVC BEDDING DETAIL

TOWN OF WESTFIELD, INDIANA
Renée Lynn Goff 10/9/06 DATE FIGURE W-14

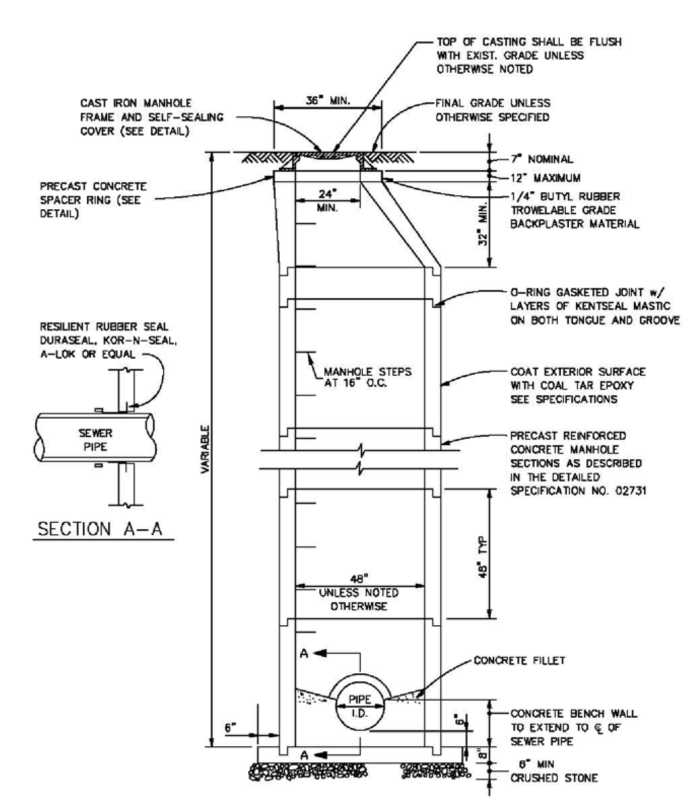

STANDARD SANITARY MANHOLE DETAIL

TOWN OF WESTFIELD, INDIANA
Renée Lynn Goff 10/9/06 DATE FIGURE S-1

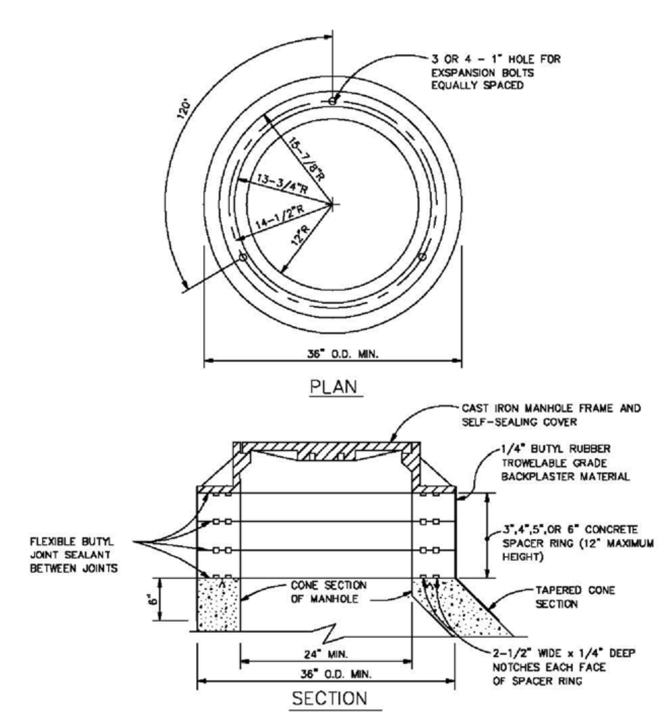

STANDARD SANITARY MANHOLE SPACER RING DETAIL

TOWN OF WESTFIELD, INDIANA
Renée Lynn Goff 10/9/06 DATE FIGURE S-2

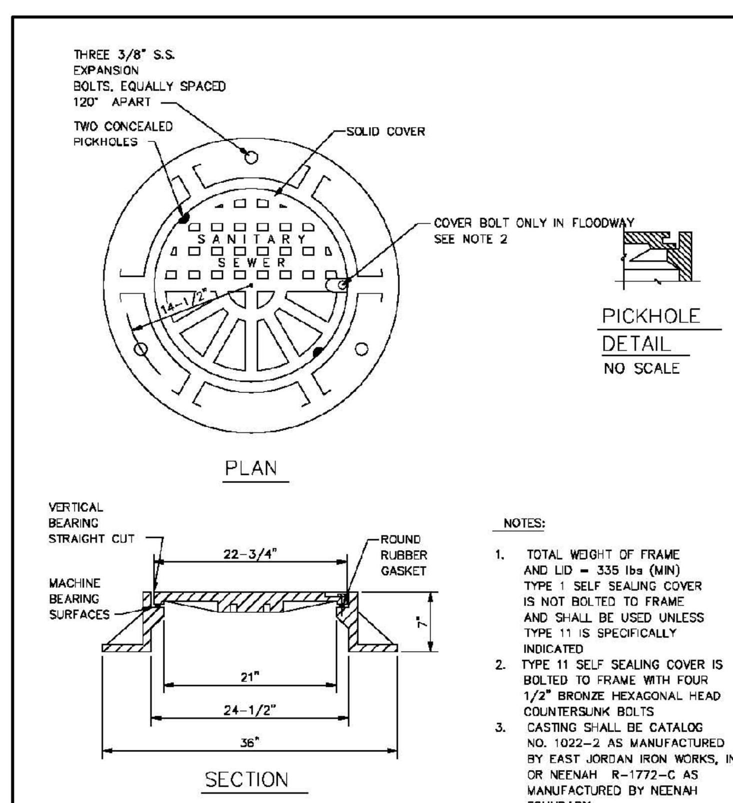

NOTES:
1. TOTAL WEIGHT OF FRAME AND LID = 335 lbs (MIN) TYPE 1 SELF SEALING COVER IS NOT BOLTED TO FRAME AND SHALL BE USED UNLESS TYPE 11 IS SPECIFICALLY INDICATED
2. TYPE 11 SELF SEALING COVER IS BOLTED TO FRAME WITH FOUR 1/2" BRONZE HEXAGONAL HEAD COUNTERSUNK BOLTS
3. CASTING SHALL BE CATALOG NO. 1022-2 AS MANUFACTURED BY EAST JORDAN IRON WORKS, INC. OR NEENAH R-1772-C AS MANUFACTURED BY NEENAH FOUNDARY.

STANDARD SANITARY MANHOLE FRAME AND COVER DETAILS

TOWN OF WESTFIELD, INDIANA
Renée Lynn Goff 10/9/06 DATE FIGURE S-3

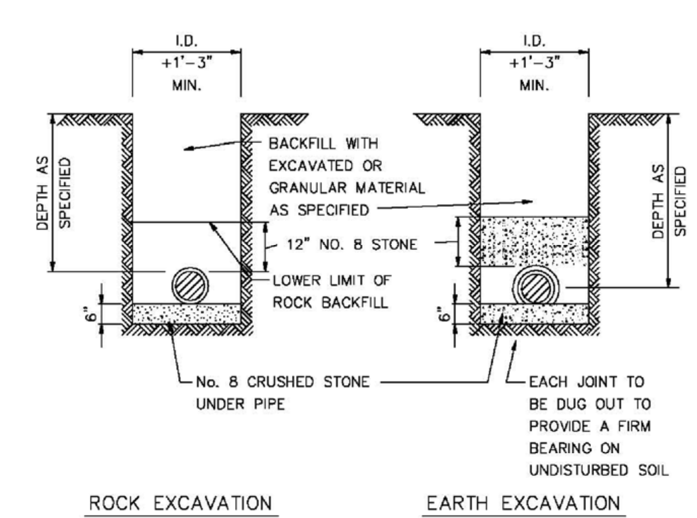

NOTE:
THIS DETAIL SHALL APPLY TO ALL SANITARY SEWER PIPE

SEWER PIPE BEDDING DETAIL

TOWN OF WESTFIELD, INDIANA
Renée Lynn Goff 10/9/06 DATE FIGURE S-5

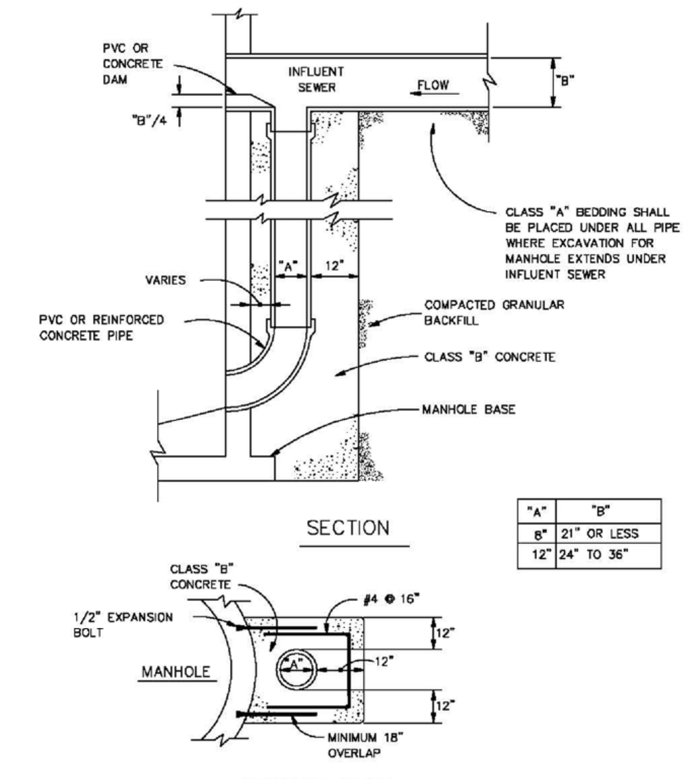

"A"	"B"
8"	21" OR LESS
12"	24" TO 36"

DROP PIPE DETAILS

TOWN OF WESTFIELD, INDIANA
Renée Lynn Goff 10/9/06 DATE FIGURE S-7

CITY OF WESTFIELD SPECIFICATIONS CAN BE FOUND AT: http://www.westfield.in.gov/egov/apps/document/center.egov?view=item;id=50

ELEMENTS
Engineering, LLC
6213 Behner Way
Indianapolis, IN 46250
(317) 490-7054

THE ANDERSON CORPORATION
301 S. UNION STREET
WESTFIELD, IN 46074

NORTHWALK RESIDENTIAL COMMUNITY
740 N. UNION STREET
WESTFIELD, IN 46074

SITE DETAILS

JENNIFER L. ROBERTS REGISTERED PE19900159 STATE OF INDIANA PROFESSIONAL ENGINEER
APPROVAL PENDING NOT FOR CONSTRUCTION

DATE:

DWN BY:	CC
CHKD. BY:	JR
SCALE:	N/A
DATE:	4/4/2014

PROJECT NUMBER
13-76-001

DESIGN PHASE
PLAN REVIEW

PLAN NUMBER
C701

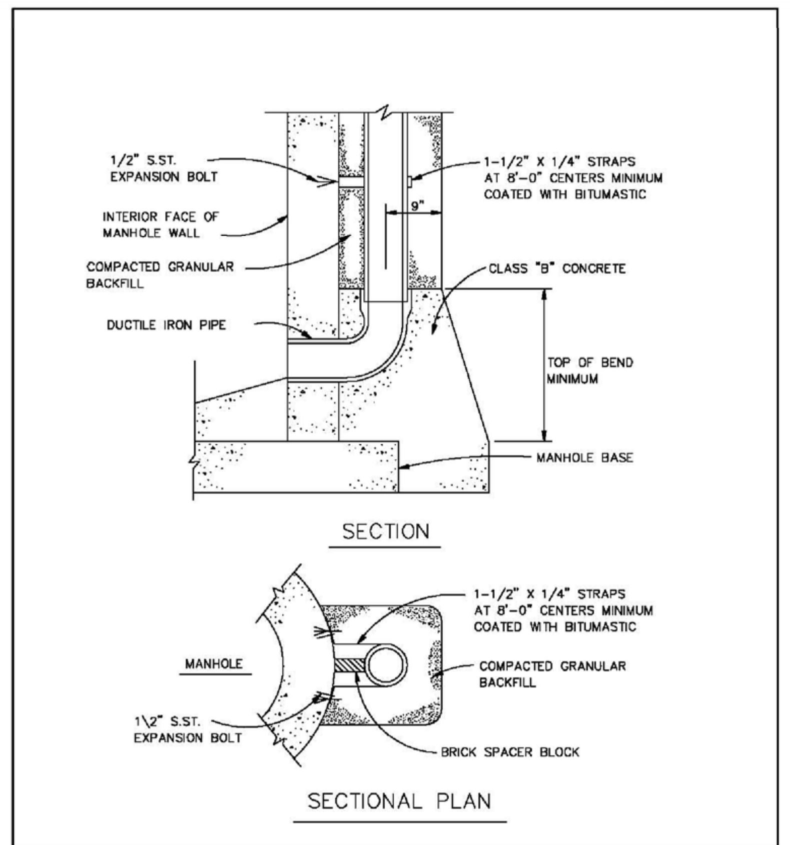

ALTERNATE PIPE DROP DETAILS

TOWN OF WESTFIELD, INDIANA

10/9/06 DATE FIGURE S-8

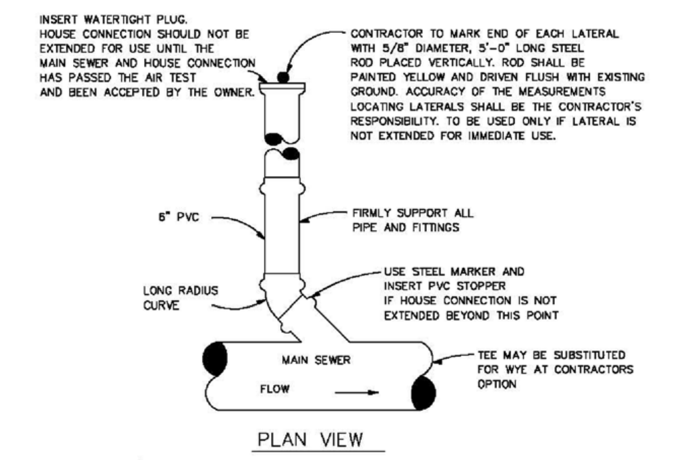

NOTES:

1. WYE BRANCHES OR TEES SHALL BE INSTALLED WHERE DESIRED BY PROPERTY OWNER OR WHERE INDICATED ON THE DRAWINGS. THEY SHALL BE EXTENDED TO PROPERTY LINE OF STREETS OR ALLEYS OR TO DISTANCES AS SHOWN ON THE DESIGN DRAWINGS AND SHALL BE OF 6" PVC SDR 35 UNLESS OTHERWISE SHOWN.
2. DEPTH AT PROPERTY LINE SHALL BE APPROXIMATELY 8'-0" UNLESS SEWER DEPTH IS LESS, IN WHICH EVENT A MINIMUM SLOPE OF 1/8" PER 1'-0" SHALL BE USED.
3. HOUSE SERVICE PIPE SHALL BE PVC SDR 35 CONFORMING TO ASTM D3034 WITH GASKETED JOINTS CONFORMING TO ASTM D3212 UNLESS OTHERWISE INDICATED.
4. HOUSE SERVICE PIPE SHALL BE INSTALLED PER SAME SPECIFICATIONS & DETAIL AS FOR MAIN LINE SEWER.

HOUSE/BUILDING SERVICE CONNECTION DETAIL 1

TOWN OF WESTFIELD, INDIANA

10/9/06 DATE FIGURE S-10

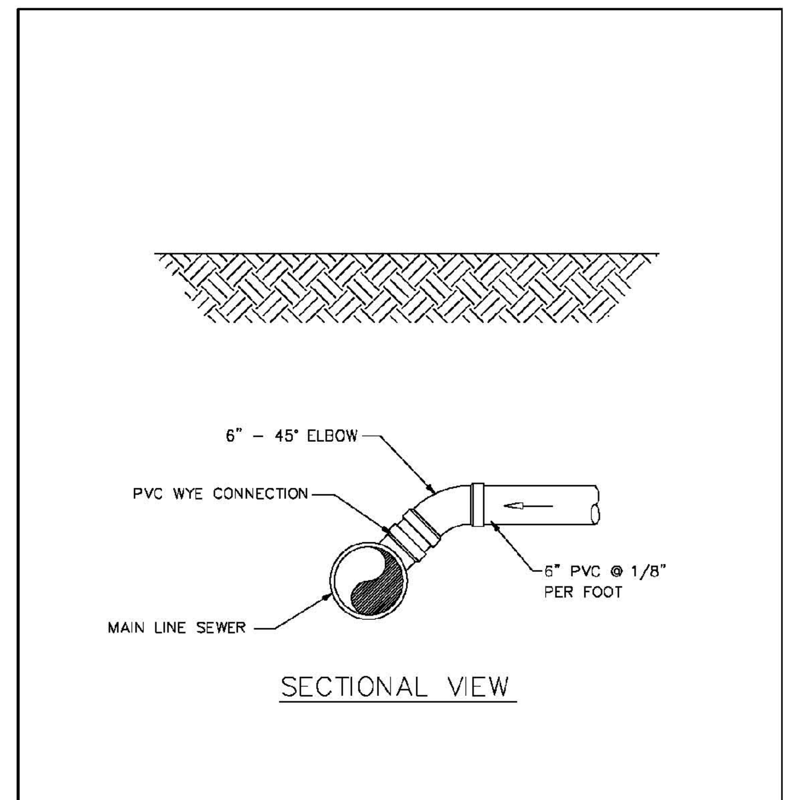

HOUSE/BUILDING SERVICE CONNECTION DETAIL 2

TOWN OF WESTFIELD, INDIANA

10/9/06 DATE FIGURE S-11

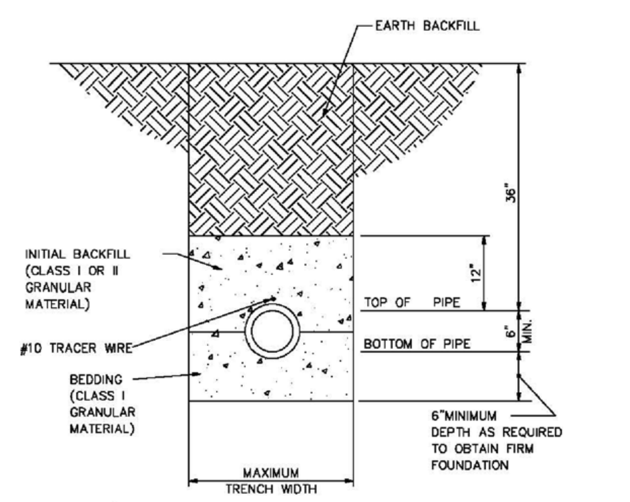

NOTES:

1. NOMINAL PIPE SIZE. (6" MIN.)
2. INSTALLATION OF FLEXIBLE PVC PIPE SHALL BE IN ACCORDANCE WITH SPECIFICATIONS CONTAINED IN ASTM D-2321
3. CLASS I GRANULAR MATERIAL SHALL BE 1/4" TO 1 1/2" GRADED STONE, PER ASTM D2321 (#8 CRUSH STONE)
4. CLASS II GRANULAR MATERIAL SHALL BE COARSE SANDS AND GRAVELS MAX. PARTIAL SIZE OF 3/4"
5. SEE FIGURE S-5 FOR MAIN LINE SEWERS PIPE BEDDING DETAILS.
6. #10 TRACER WIRE TO BE EXTENDED FROM SEWER MAIN TO 6" CLEANOUT RISER

HOUSE/BUILDING SERVICE BEDDING DETAILS

TOWN OF WESTFIELD, INDIANA

10/9/06 DATE FIGURE S-12

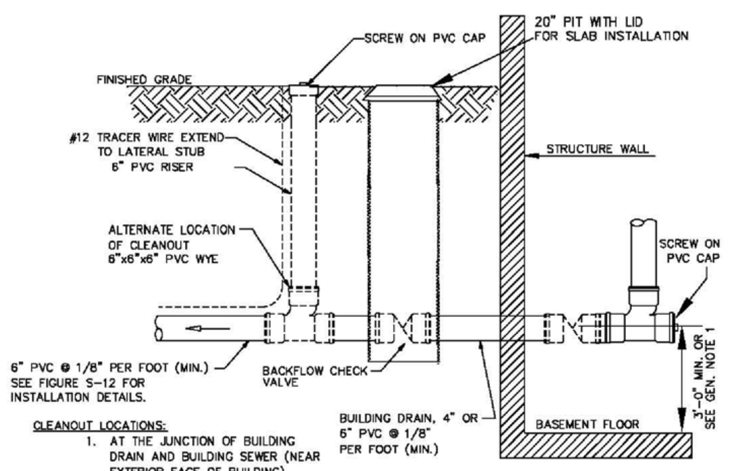

CLEANOUT LOCATIONS:

1. AT THE JUNCTION OF BUILDING DRAIN AND BUILDING SEWER (NEAR EXTERIOR FACE OF BUILDING)
2. IF BUILDING SEWER IS MORE THAN 100 FEET FROM MAIN LINE SEWER, CLEAN-OUTS SPACING SHALL NOT EXCEED 100 FEET.
3. A CLEANOUT IS REQUIRED AT EACH BEND THAT IS GREATER THAN 45 DEGREES.
4. THERE SHALL BE NO BASEMENT DRAINS CONNECTED TO SERVICE CONNECTION

GENERAL REQUIREMENTS

1. THE LOWEST FLOOR ELEVATION RECEIVING GRAVITY SERVICE MUST BE A MIN.THREE (3.0) FEET ABOVE TOP NEAREST MANHOLE RIM.

HOUSE/BUILDING SERVICE CLEAN-OUT DETAIL

TOWN OF WESTFIELD, INDIANA

10/9/06 DATE FIGURE S-13

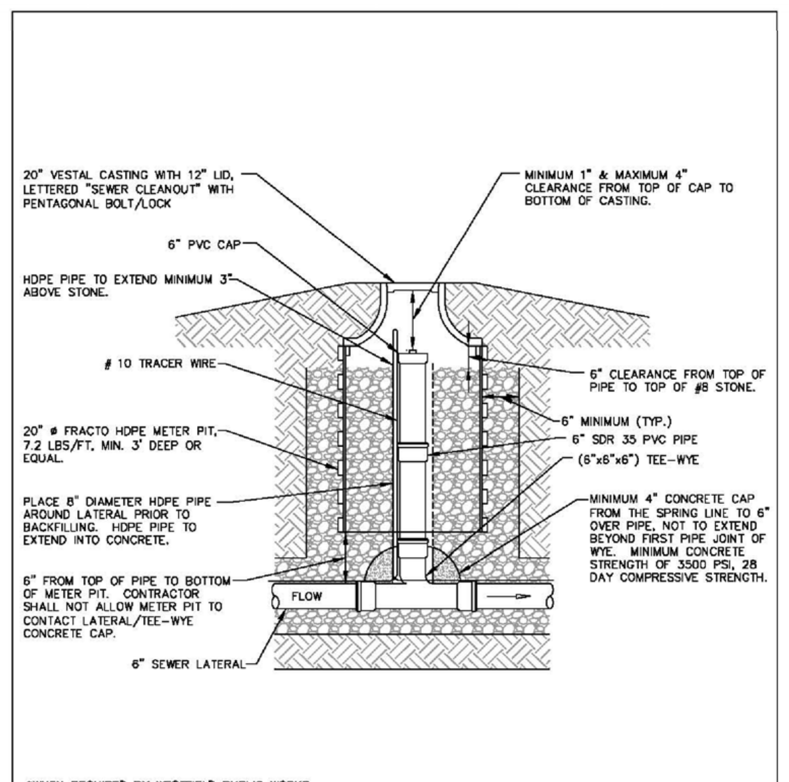

*WHEN REQUIRED BY WESTFIELD PUBLIC WORKS

DRAWING NOT TO SCALE

TYPE 2 CLEAN-OUT DETAIL

TOWN OF WESTFIELD, INDIANA

10/9/06 DATE FIGURE S-15

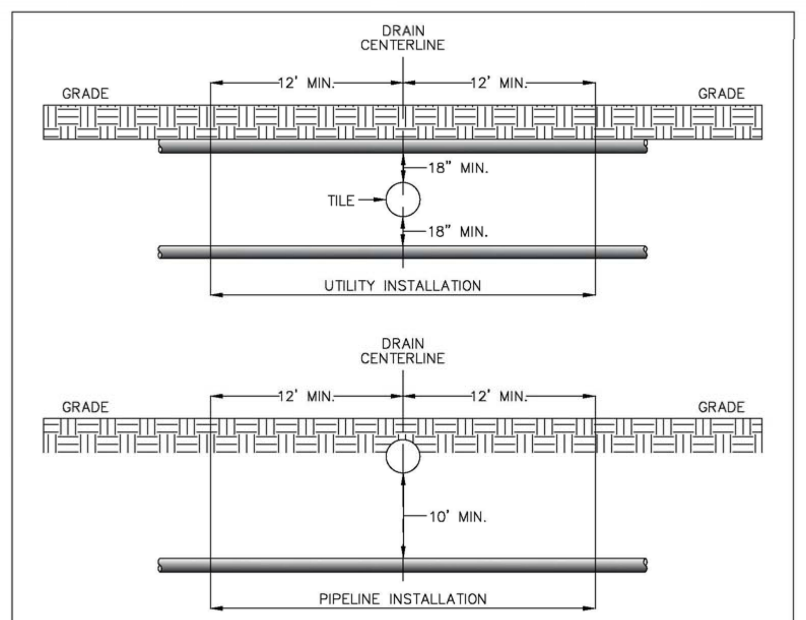

When installing a utility across a storm drain, the utility contractor will adhere to the following procedure.

1. Utility to be installed a minimum of eighteen (18") inches below or above existing tile.
2. If utility is to be installed using directional boring methods, the utility shall be a minimum of five (5') feet below the storm drain.
3. All petroleum pipelines and/or high pressure transmission lines are to be installed a minimum of ten (10') feet below existing invert of storm drains.
4. If sanitary sewer is installed under drain, sewer shall be encased with concrete. Minimal distance shall be measured from top of concrete encasement.
5. Utility contractor shall adhere to open drain crossing standard during construction process.
6. Notify Westfield Public Works at (317) 804-3150, two working days prior to installation and backfilling.

PIPELINE & UTILTIY INSTALLATION: TILE DRAIN

CITY OF WESTFIELD, INDIANA

4/1/14 DATE FIGURE ST-19

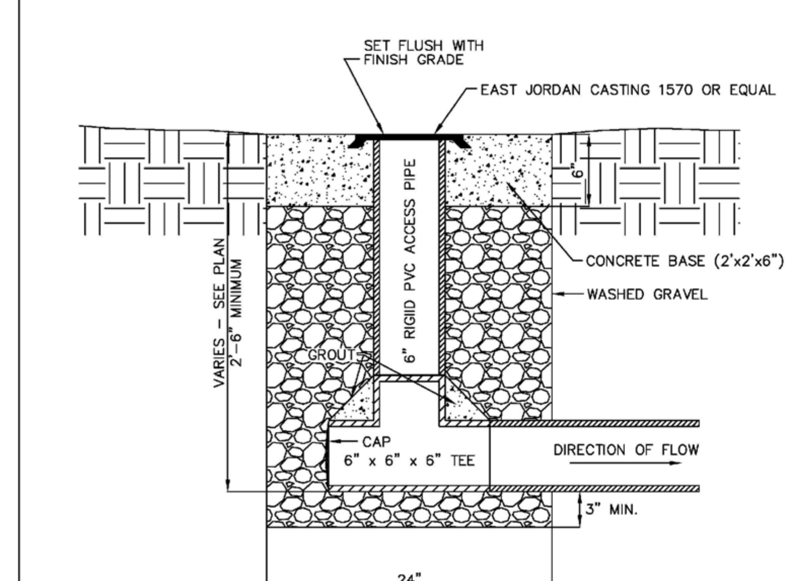

NOTE: MINIMUM 6" SUB SURFACE DRAIN D= PIPE DIAMETER

NOTE: TILE SHALL BE DOUBLE WALL SMOOTH WALL PERFORATED HDPE PIPE.

SUBSURFACE DRAIN (SSD) RISER DETAIL

CITY OF WESTFIELD, INDIANA

4/1/13 DATE FIGURE ST-37

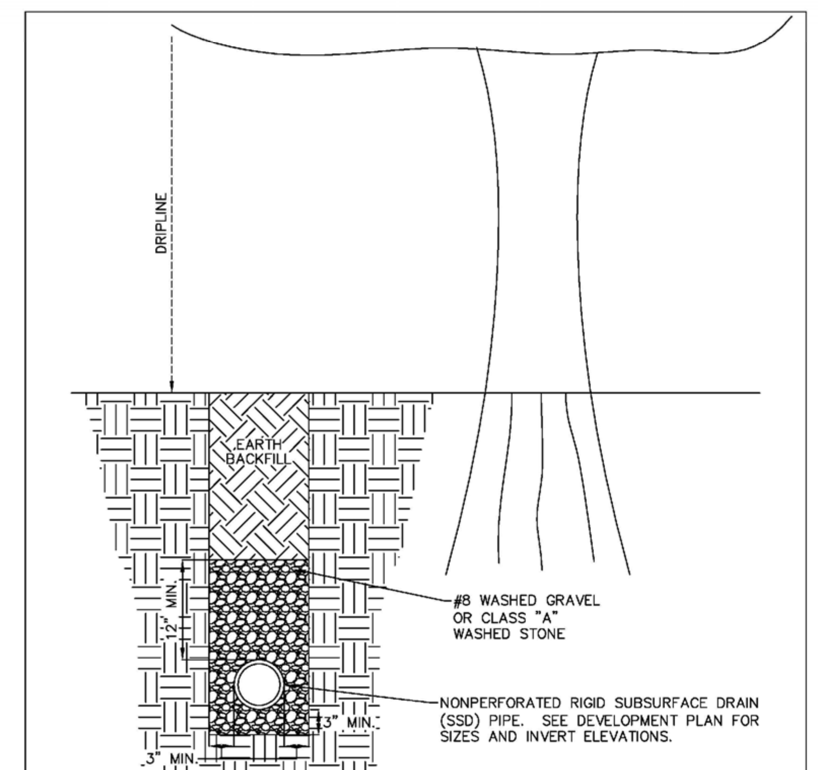

NOTE:
TILE SHALL BE DOUBLE WALL, SMOOTH WALL NONPERFORATED PLASTIC OR HDPE PIPE.

SUBSURFACE DRAIN (SSD) DETAIL WHEN WITHIN DRIPLINE OF EXISTING TREES

CITY OF WESTFIELD, INDIANA

4/1/13 DATE FIGURE ST-39

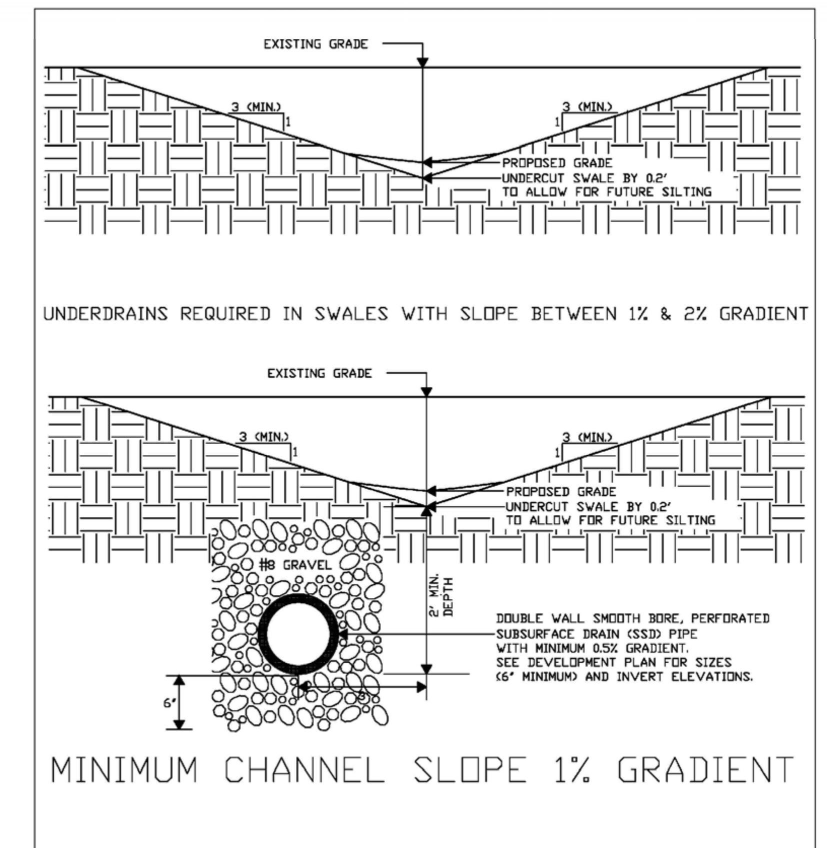

TYPICAL SWALE DETAIL

CITY OF WESTFIELD, INDIANA

4/1/13 DATE FIGURE ST-43

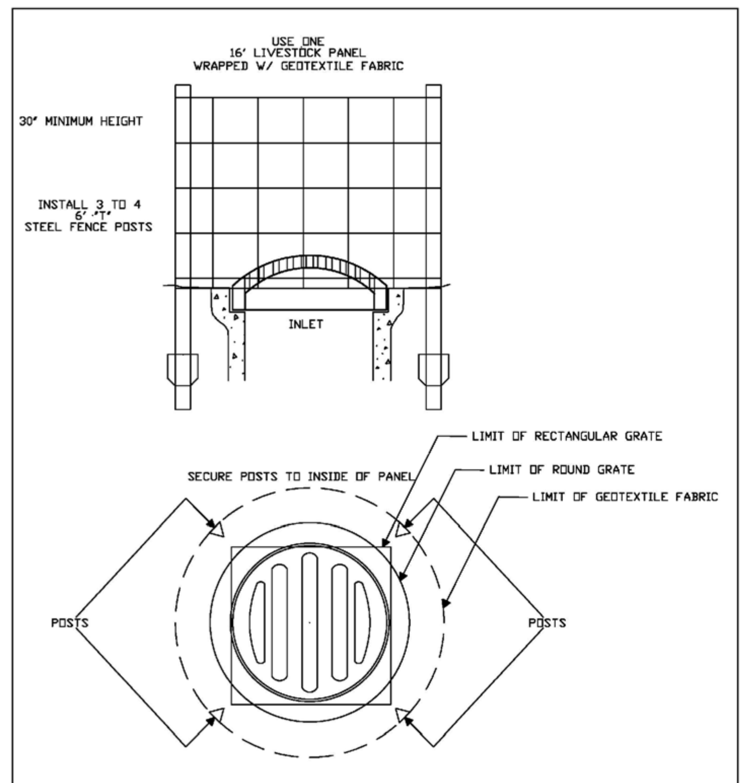

TEMPORARY DITCH INLET PROTECTION

CITY OF WESTFIELD, INDIANA

4/1/13 DATE FIGURE EC-1

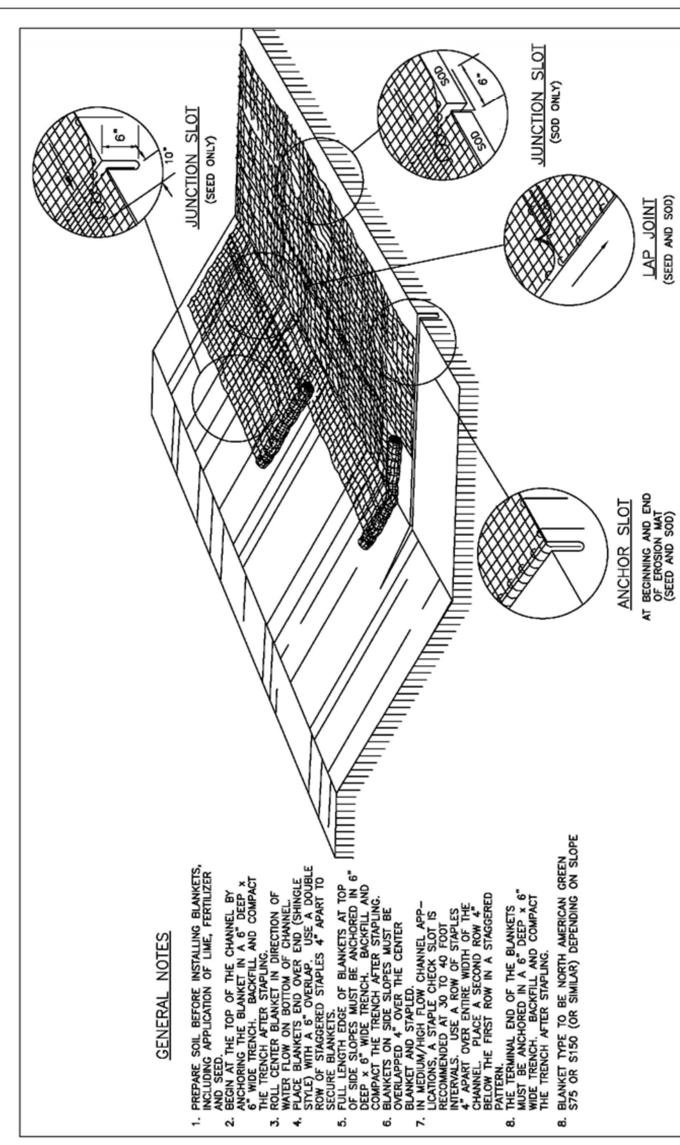

EROSION CONTROL MAT - SLOPE DETAIL

CITY OF WESTFIELD, INDIANA

4/1/14 DATE

FIGURE EC-2

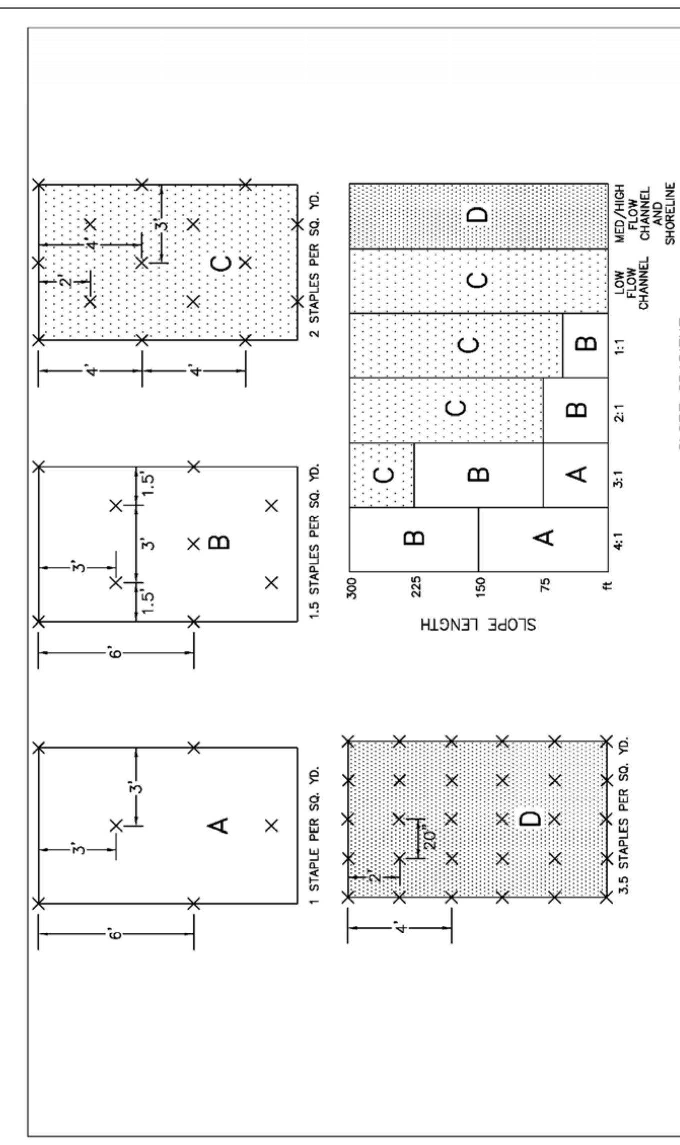

EROSION CONTROL MAT - STAPLE GUIDE

CITY OF WESTFIELD, INDIANA

4/1/14 DATE

FIGURE EC-3

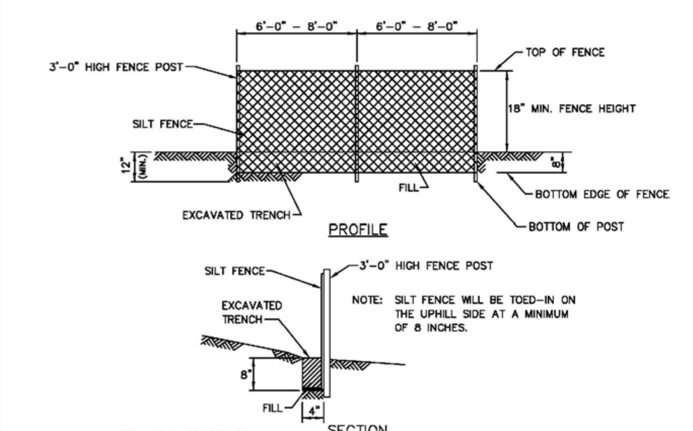

INSTALLATION PROCEDURE

1. 2" x 2" X 36" HARDWOOD OR STEEL FENCE POSTS ARE INSTALLED 6' APART (w/ EXTRA STRENGTH FABRIC WITHOUT WIRE BACKING) OR 8' APART (w/ WIRE BACKING), ON A SLIGHT ANGLE TOWARD THE ANTICIPATED RUNOFF SOURCE.
2. A TRENCH 4" WIDE BY 8" DEEP IS DUG ALONG THE UPHILL SIDE OF THE FENCE LINE.
3. THE SILT FENCE IS UNROLLED AND LAID OUT ALONG THE FENCE LINE.
4. AT THIS TIME THE LOWER 8" OF THE FENCE IS LAID IN THE TRENCH AND CURLED TOWARD THE EROSION SOURCE. THE TRENCH IS THEN BACKFILLED WITH SOIL.

SILT FENCE DETAIL

CITY OF WESTFIELD, INDIANA

4/1/13 DATE FIGURE EC-4

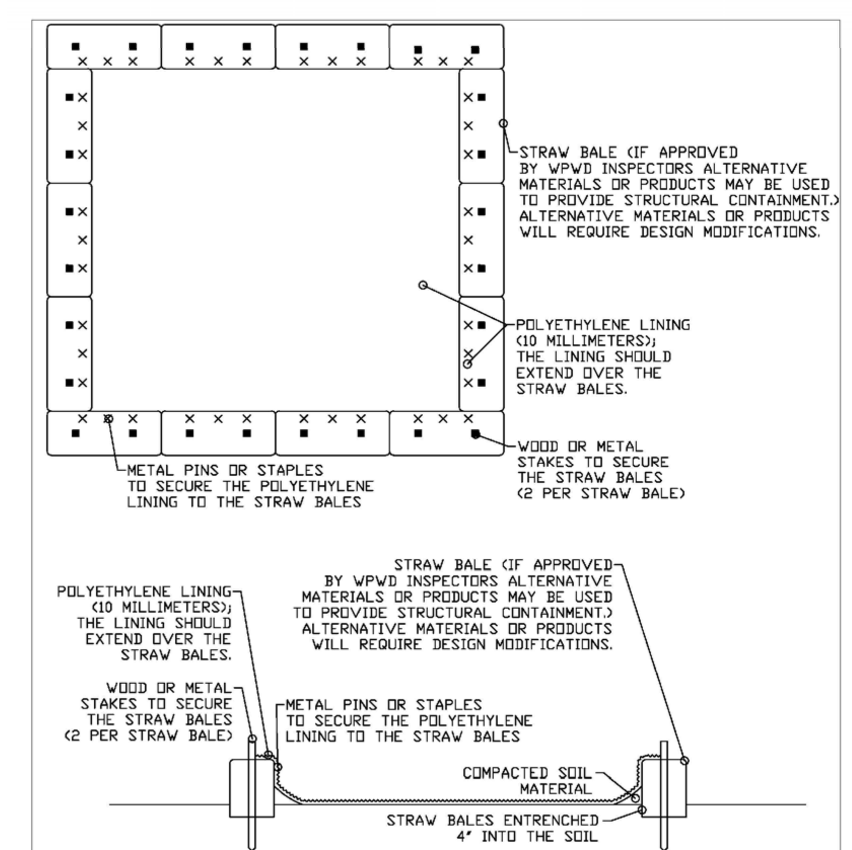

CONCRETE WASHOUT DETAIL

CITY OF WESTFIELD, INDIANA

4/1/13 DATE FIGURE EC-5

CITY OF WESTFIELD SPECIFICATIONS CAN BE FOUND AT: http://www.westfield.in.gov/egov/apps/document/center.egov?view=item;id=50

ELEMENTS
Engineering, LLC
6213 Behner Way
Indianapolis, IN 46250
(317) 490-7054

THE ANDERSON CORPORATION
301 S. UNION STREET
WESTFIELD, IN 46074

NORTHWALK RESIDENTIAL COMMUNITY
740 N. UNION STREET
WESTFIELD, IN 46074

SITE DETAILS

APPROVAL PENDING NOT FOR CONSTRUCTION

DATE:

DWN BY:	CC
CHKD. BY:	JR
SCALE:	N/A
DATE:	4/4/2014

PROJECT NUMBER
13-76-001

DESIGN PHASE
PLAN REVIEW

PLAN NUMBER
C702

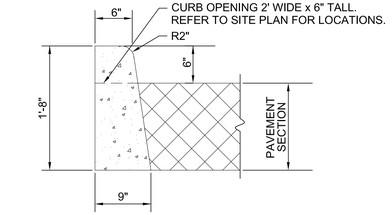

CB1 CONCRETE STRAIGHT CURB DETAIL
NOT TO SCALE

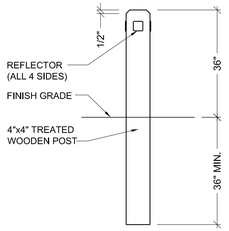

MI1 WOOD POST DETAIL
NOT TO SCALE

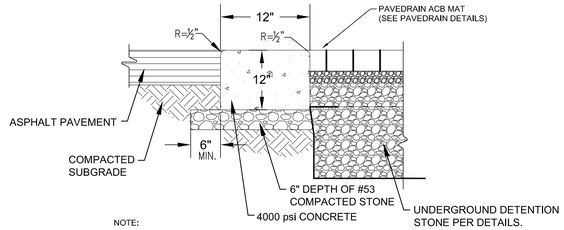

NOTE:

MAXIMUM SPACING BETWEEN TRANSVERSE EXPANSION JOINTS SHALL BE 50 FEET. MAXIMUM SPACING BETWEEN TRANSVERSE CONTROL JOINTS SHALL BE 10 FEET ON TANGENT SECTIONS AND 5 FEET ON RADIUS SECTIONS

MI2 CONCRETE BAND DETAIL
NOT TO SCALE

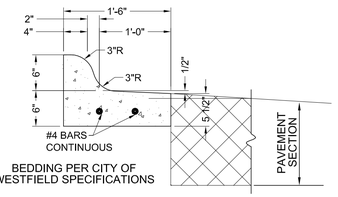

BEDDING PER CITY OF WESTFIELD SPECIFICATIONS

CB2 REVERSE ROLL CURB DETAIL
NOT TO SCALE

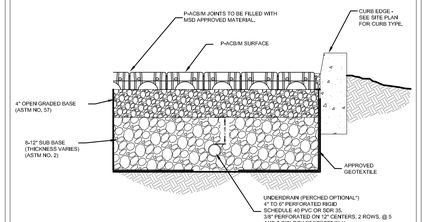

PERMEABLE - ARTICULATING CONCRETE BLOCK/MAT
TYPICAL SECTION

- THE NEED FOR A PERCHED UNDERDRAIN IS OPTIONAL AND IS DEPENDENT ON THE INFILTRATION RATE OF THE SUBGRADE SOIL. PLASTIC SOILS SHOULD NOT PERCH THE UNDERDRAIN. THE HORIZONTAL AND VERTICAL LOCATION OF ALL UNDERDRAINS SHALL BE DETERMINED BY THE ENGINEER, AND SHOWN ON THE PLANS.
- ADDITIONAL UNDERDRAINS MAY BE PERCHED ABOVE THE REQUIRED STORAGE ELEVATION AND WITHIN THE STORAGE BED IN ORDER TO PROTECT THE PAVER BLOCKS FROM UPFLOWS RESULTING FROM SURCHARGE.

NOTE:
STORM INLETS ARE USED WITHIN PAVEDRAIN SECTION AT ENTRANCE FOR EMERGENCY OVERFLOW. SEE GRADING PLAN.

PAVEDRAIN
MODIFIED DETAIL
CROSS-SECTION

PAVE DRAIN

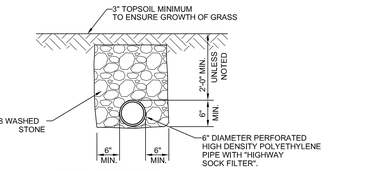

INSTALLATION REQUIRED
PIPE MATERIAL PER INDIANA DEPT. OF TRANSPORTATION CURRENT STANDARD SPECS. SEE GRADING PLAN FOR PIPE SLOPE.

ST11 6" PIPE UNDERDRAIN DETAIL
NOT TO SCALE

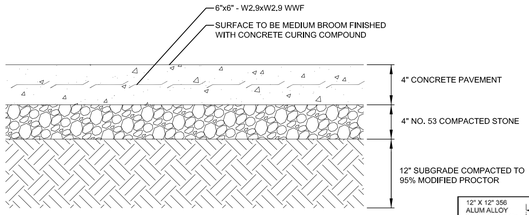

PV05 CONCRETE PAVEMENT SECTION
NOT TO SCALE

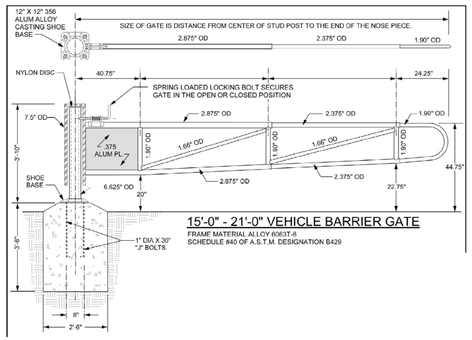

15'-0" - 21'-0" VEHICLE BARRIER GATE
FRAME MATERIAL ALLOY 6063T-6
SCHEDULE #40 OF A.S.T.M. DESIGNATION B429

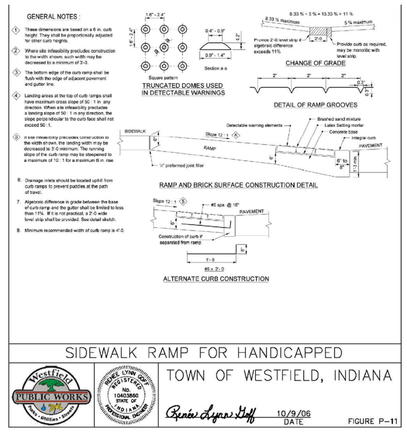

SIDEWALK RAMP FOR HANDICAPPED

TOWN OF WESTFIELD, INDIANA

10/9/06 DATE

FIGURE P-11

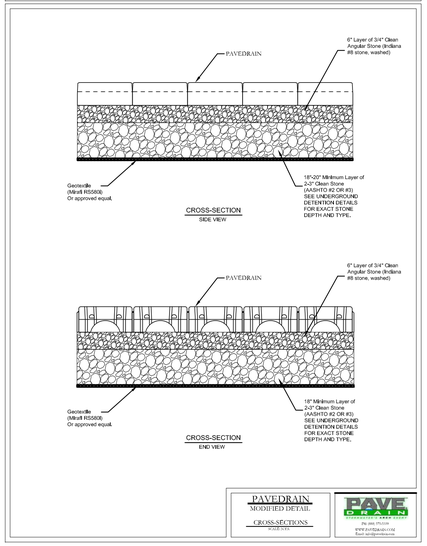

PAVEDRAIN
MODIFIED DETAIL
CROSS-SECTIONS

PAVE DRAIN

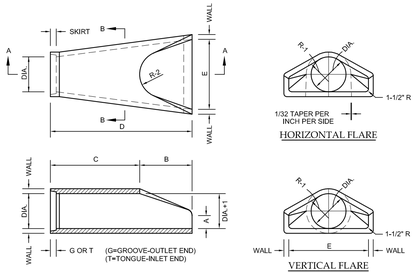

SECTION A-A SECTION B-B

Dia.	Wall	G or T	WT. SEC.	A	B	C	D	E	DIA.+1	R-1	R-2	SKIRT
12	2	1 1/2	530	4	24	48 7/8	72 7/8	24	13	10 1/16	9	3 1/2
15	2 1/4	2	740	6	27	46	73	30	16	12 1/2	11	3 1/2
18	2 1/2	2 1/2	990	9	27	46	73	36	19	15 1/2	12	4
21	2 3/4	2 1/4	1260	9	35	38	73	42	22	16 1/8	13	4
24	3	2 1/2	1520	9 1/2	43 1/2	30	73 1/2	48	25	16 11/16	14	4 1/2
27	3 1/4	2 1/2	1930	10 1/2	48	25 1/2	73 1/2	54	28	17 3/4	14 1/2	4 1/2
30	3 1/2	3	2190	12	54	19 3/4	73 3/4	60	31	18 5/16	15	5
33	3 3/4	3 3/8	3150	13 1/2	58 1/2	39 1/4	97 3/4	66	34	23 3/4	17 1/2	5 1/2
36	4	3 1/2	4100	15	63	34 3/4	97 3/4	72	37	24 1/16	20	5 1/2
42	4 1/2	3 3/4	5360	21	63	35	98	78	43	27 1/4	22	5 1/2
48	5	4 1/4	6550	24	72	35	98	84	49	28 1/8	22	5 3/4
54	5 1/2	4 3/4	8040	27	65	35	100	90	55	32 7/8	24	6 1/4
60	6	5	8750	30	60	39	99	96	61	36 3/4	24	6 3/4
66	6 1/2	5 1/2	10630	24	78	21	99	102	67	35 11/16	24	7 1/4
72	7	6	12520	34	78	21	99	108	73	38 5/8	24	7 3/4
78	7 1/2	6 1/2	14430	24	78	21	99	114	79	41 15/16	24	8 1/2
84	8	7	16350	24	78	21	99	120	85	44 13/16	24	9

NOTE:
MANUFACTURE OF END SECTION IS IN ACCORDANCE WITH APPLICABLE PORTIONS OF A.S.T.M. SPECIFICATION C76.

ST01 PRECAST CONCRETE FLARED END SECTION
NOT TO SCALE

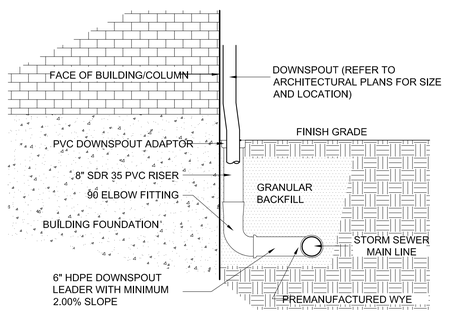

NOTE:
VERIFY DIMENSIONS OF DOWNSPOUTS, ADAPTERS, AND PIPE SIZE NECESSARY FOR CONNECTIONS WITH ARCHITECTURAL PLANS

ST17 DOWNSPOUT CONNECTION DETAIL
NOT TO SCALE

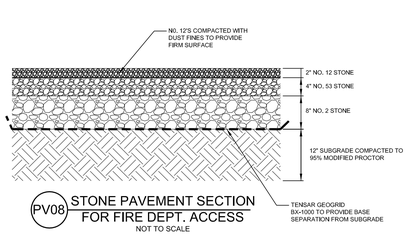

TYPICAL CROSS SECTION: LOCAL STREETS TYPE A TREES
WITH NO ON STREET PARKING

TOWN OF WESTFIELD, INDIANA

10/9/06 DATE

FIGURE C-09

NYLOPLAST 12" DRAIN BASIN: 2812AG _ _ X

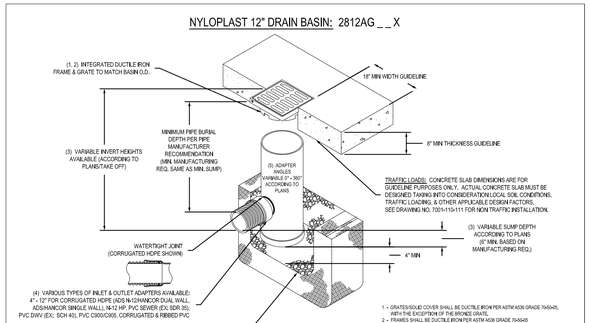

GRATE OPTIONS	LOAD RATING	PART #	DRAWING #
PEDESTRIAN	MEETS H-10	1296GSP	7001-110-202
SOLID COVER	MEETS H-10	1296GSC	7001-110-203
SOLID COVER	MEETS H-20	1296GSC	7001-110-204
PEDESTRIAN BRONZE	N/A	1296CGPB	7001-110-205
DOME	N/A	1296CGD	7001-110-206
GROUP IN GRATE	LIGHT DUTY	1232GX	7001-110-003

THIS PRINT DISCLOSES SUBJECT MATTER IN WHICH NYLOPLAST HAS PROPRIETARY RIGHTS. THE RECEIPT OR POSSESSION OF THIS PRINT DOES NOT CONVEY, TRANSFER, OR LICENSE THE USE OF THE DISCLOSED TECHNICAL INFORMATION SHOWN HEREIN. REPRODUCTION OF THIS PRINT OR ANY INFORMATION CONTAINED HEREIN, OR MANUFACTURE OF ANY ARTICLE HEREFROM, FOR THE DISCLOSURE TO OTHERS IS FORBIDDEN EXCEPT BY SPECIFIC WRITTEN PERMISSION FROM NYLOPLAST.

DRAWN BY	EBC	MATERIAL	
DATE	3-29-06		
REVISED BY	EBC	PROJECT NO./NAME	
DATE	3-10-10		
DWG SIZE	A	SCALE 1:20	SHEET 1 OF 1

3124 VERONA AVE
BUFORD, GA 30518
PHN (770) 932-2443
FAX (770) 932-2490
www.nyloplastus.com

TITLE
12 IN DRAIN BASIN QUICK SPEC INSTALLATION DETAIL

DWG NO. 7001-110-109 REV C

ELEMENTS
Engineering, LLC
6213 Behner Way
Indianapolis, IN 46250
(317) 490-7054

THE ANDERSON CORPORATION
301 S. UNION STREET
WESTFIELD, IN 46074

NORTHWALK RESIDENTIAL COMMUNITY
740 N. UNION STREET
WESTFIELD, IN 46074

SITE DETAILS

JENNIFER L. ROSS
STATE OF INDIANA
PE 10900018
REGISTERED
PROFESSIONAL ENGINEER
APPROVED/RELEASED FOR CONSTRUCTION

DATE:

DWN BY:	CC
CHKD. BY:	JR
SCALE:	N/A
DATE:	4/4/2014

PROJECT NUMBER
13-76-001

DESIGN PHASE
PLAN REVIEW

PLAN NUMBER
C703

PROJECT INFORMATION	
ENGINEERED PRODUCT MANAGER:	JOE ROGERS 317-417-0385 JOE.ROGERS@ADS-PIPE.COM
ADS SALES REP:	JOHN ADAMS 317-506-1838 J.ADAMS@HANCOR.COM
PROJECT NO:	45526

ADVANCED DRAINAGE SYSTEMS, INC.

NORTHWALK RESIDENTIAL COMMUNITY

WESTFIELD, INDIANA

STORMWATER CHAMBER SPECIFICATIONS

1. CHAMBERS SHALL BE STORMTECH MC-3500 OR APPROVED EQUAL.
2. CHAMBERS SHALL BE MADE FROM VIRGIN, IMPACT-MODIFIED POLYPROPYLENE COPOLYMERS.
3. CHAMBER ROWS SHALL PROVIDE CONTINUOUS, UNOBSTRUCTED INTERNAL SPACE WITH NO INTERNAL SUPPORT PANELS THAT WOULD IMPEDE FLOW OR LIMIT ACCESS FOR INSPECTION.
4. THE STRUCTURAL DESIGN OF THE CHAMBERS, THE STRUCTURAL BACKFILL, AND THE INSTALLATION REQUIREMENTS SHALL ENSURE THAT THE LOAD FACTORS SPECIFIED IN THE AASHTO LRFD BRIDGE DESIGN SPECIFICATIONS, SECTION 12.12, ARE MET FOR: 1) LONG-DURATION DEAD LOADS AND 2) SHORT-DURATION LIVE LOADS, BASED ON THE AASHTO DESIGN TRUCK WITH CONSIDERATION FOR IMPACT AND MULTIPLE VEHICLE PRESENCES.
5. CHAMBERS SHALL MEET THE REQUIREMENTS OF ASTM F2418, "STANDARD SPECIFICATION FOR POLYPROPYLENE (PP) CORRUGATED WALL STORMWATER COLLECTION CHAMBERS".
6. CHAMBERS SHALL BE DESIGNED AND ALLOWABLE LOADS DETERMINED IN ACCORDANCE WITH ASTM F2787, "STANDARD PRACTICE FOR STRUCTURAL DESIGN OF THERMOPLASTIC CORRUGATED WALL STORMWATER COLLECTION CHAMBERS".
7. ONLY CHAMBERS THAT ARE APPROVED BY THE SITE DESIGN ENGINEER WILL BE ALLOWED. THE CHAMBER MANUFACTURER SHALL SUBMIT THE FOLLOWING UPON REQUEST TO THE SITE DESIGN ENGINEER FOR APPROVAL BEFORE DELIVERING CHAMBERS TO THE PROJECT SITE:
   a. A STRUCTURAL EVALUATION SEALED BY A REGISTERED PROFESSIONAL ENGINEER THAT DEMONSTRATES THAT THE SAFETY FACTORS ARE GREATER THAN OR EQUAL TO 1.95 FOR DEAD LOAD AND 1.75 FOR LIVE LOAD, THE MINIMUM REQUIRED BY ASTM F2787 AND BY AASHTO FOR THERMOPLASTIC PIPE.
   b. A STRUCTURAL EVALUATION SEALED BY A REGISTERED PROFESSIONAL ENGINEER THAT DEMONSTRATES THAT THE LOAD FACTORS SPECIFIED IN THE AASHTO LRFD BRIDGE DESIGN SPECIFICATIONS, SECTION 12.12, ARE MET. THE 50 YEAR CREEP MODULUS DATA SPECIFIED IN ASTM F2418 MUST BE USED AS PART OF THE AASHTO STRUCTURAL EVALUATION TO VERIFY LONG-TERM PERFORMANCE.
   c. STRUCTURAL CROSS SECTION DETAIL ON WHICH THE STRUCTURAL EVALUATION IS BASED.
8. CHAMBERS AND END CAPS SHALL BE PRODUCED AT AN ISO 9001 CERTIFIED MANUFACTURING FACILITY.

IMPORTANT - NOTES FOR THE BIDDING AND INSTALLATION OF MC-3500 CHAMBER SYSTEM

1. STORMTECH MC-3500 CHAMBERS SHALL NOT BE INSTALLED UNTIL THE MANUFACTURER'S REPRESENTATIVE HAS COMPLETED A PRE-CONSTRUCTION MEETING WITH THE INSTALLERS.
2. STORMTECH MC-3500 CHAMBERS SHALL BE INSTALLED IN ACCORDANCE WITH THE "STORMTECH MC-3500/MC-4500 CONSTRUCTION GUIDE".
3. CHAMBERS ARE NOT TO BE BACKFILLED WITH A DOZER OR AN EXCAVATOR SITUATED OVER THE CHAMBERS.

   STORMTECH RECOMMENDS 3 BACKFILL METHODS:
   - STONESHOOTER LOCATED OFF THE CHAMBER BED.
   - BACKFILL AS ROWS ARE BUILT USING AN EXCAVATOR ON THE FOUNDATION STONE OR SUBGRADE.
   - BACKFILL FROM OUTSIDE THE EXCAVATION USING A LONG BOOM HOE OR EXCAVATOR.
4. THE FOUNDATION STONE SHALL BE LEVELED AND COMPACTED PRIOR TO PLACING CHAMBERS.
5. JOINTS BETWEEN CHAMBERS SHALL BE PROPERLY SEATED PRIOR TO PLACING STONE.
6. MAINTAIN MINIMUM - 9" (230 mm) SPACING BETWEEN THE CHAMBER ROWS.
7. END CAPS SHALL BE FASTENED TO CHAMBERS WITH (3) 2-1/2" COARSE THREAD SCREWS.
8. INLET AND OUTLET MANIFOLDS MUST BE INSERTED A MINIMUM OF 12" (300 mm) INTO CHAMBER END CAPS.
9. EMBEDMENT STONE SURROUNDING CHAMBERS MUST BE A CLEAN, CRUSHED, ANGULAR STONE 3/4-2" (20-50 mm) MEETING THE AASHTO M43 DESIGNATION OF #3 OR #4.
10. STONE MUST BE PLACED ON THE TOP CENTER OF THE CHAMBER TO ANCHOR THE CHAMBERS IN PLACE AND PRESERVE ROW SPACING..
11. ADS RECOMMENDS THE USE OF "FLEXSTORM CATCH IT" INSERTS DURING CONSTRUCTION FOR ALL INLETS TO PROTECT THE SUBSURFACE STORMWATER MANAGEMENT SYSTEM FROM CONSTRUCTION SITE RUNOFF.

NOTES FOR CONSTRUCTION EQUIPMENT

1. STORMTECH MC-3500 CHAMBERS SHALL BE INSTALLED IN ACCORDANCE WITH THE "STORMTECH MC-3500/MC-4500 CONSTRUCTION GUIDE".
2. THE USE OF EQUIPMENT OVER MC-3500 CHAMBERS IS LIMITED:
   - NO EQUIPMENT IS ALLOWED ON BARE CHAMBERS.
   - NO RUBBER TIRED LOADER, DUMP TRUCK, OR EXCAVATORS ARE ALLOWED UNTIL PROPER FILL DEPTHS ARE REACHED IN ACCORDANCE WITH THE "STORMTECH MC-3500/MC-4500 CONSTRUCTION GUIDE".
   - WEIGHT LIMITS FOR CONSRUCTION EQUIPMENT CAN BE FOUND IN THE "STORMTECH MC-3500/MC-4500 CONSTRUCTION GUIDE".
3. FULL 36" (900 mm) OF STABILIZED COVER MATERIALS OVER THE CHAMBERS IS REQUIRED FOR DUMP TRUCK TRAVEL OR DUMPING.

USE OF A DOZER TO PUSH EMBEDMENT STONE BETWEEN THE ROWS OF CHAMBERS MAY CAUSE DAMAGE TO CHAMBERS AND IS NOT AN ACCEPTABLE BACKFILL METHOD. ANY CHAMBERS DAMAGED BY USING THE "DUMP AND PUSH" METHOD ARE NOT COVERED UNDER THE STORMTECH STANDARD WARRANTY.

CONTACT STORMTECH AT 1-888-892-2694 WITH ANY QUESTIONS ON INSTALLATION REQUIREMENTS OR WEIGHT LIMITS FOR CONSTRUCTION EQUIPMENT.

©2013 ADS, INC.

STORMWATER CHAMBER SPECIFICATIONS

1. CHAMBERS SHALL BE STORMTECH MC-4500 OR APPROVED EQUAL.
2. CHAMBERS SHALL BE MANUFACTURED FROM VIRGIN, IMPACT-MODIFIED POLYPROPYLENE COPOLYMERS.
3. CHAMBER ROWS SHALL PROVIDE CONTINUOUS, UNOBSTRUCTED INTERNAL SPACE WITH NO INTERNAL SUPPORT PANELS THAT WOULD IMPEDE FLOW OR LIMIT ACCESS FOR INSPECTION.
4. THE STRUCTURAL DESIGN OF THE CHAMBERS, THE STRUCTURAL BACKFILL, AND THE INSTALLATION REQUIREMENTS SHALL ENSURE THAT THE LOAD FACTORS SPECIFIED IN THE AASHTO LRFD BRIDGE DESIGN SPECIFICATIONS, SECTION 12.12, ARE MET FOR: 1) LONG-DURATION DEAD LOADS AND 2) SHORT-DURATION LIVE LOADS, BASED ON THE AASHTO DESIGN TRUCK WITH CONSIDERATION FOR IMPACT AND MULTIPLE VEHICLE PRESENCES.
5. CHAMBERS SHALL MEET THE REQUIREMENTS OF ASTM F2418, "STANDARD SPECIFICATION FOR POLYPROPYLENE (PP) CORRUGATED WALL STORMWATER COLLECTION CHAMBERS".
6. CHAMBERS SHALL BE DESIGNED AND ALLOWABLE LOADS DETERMINED IN ACCORDANCE WITH ASTM F2787, "STANDARD PRACTICE FOR STRUCTURAL DESIGN OF THERMOPLASTIC CORRUGATED WALL STORMWATER COLLECTION CHAMBERS".
7. ONLY CHAMBERS THAT ARE APPROVED BY THE SITE DESIGN ENGINEER WILL BE ALLOWED. THE CHAMBER MANUFACTURER SHALL SUBMIT THE FOLLOWING UPON REQUEST TO THE SITE DESIGN ENGINEER FOR APPROVAL BEFORE DELIVERING CHAMBERS TO THE PROJECT SITE:
   a. A STRUCTURAL EVALUATION SEALED BY A REGISTERED PROFESSIONAL ENGINEER THAT DEMONSTRATES THAT THE SAFETY FACTORS ARE GREATER THAN OR EQUAL TO 1.95 FOR DEAD LOAD AND 1.75 FOR LIVE LOAD, THE MINIMUM REQUIRED BY ASTM F2787 AND BY AASHTO FOR THERMOPLASTIC PIPE.
   b. A STRUCTURAL EVALUATION SEALED BY A REGISTERED PROFESSIONAL ENGINEER THAT DEMONSTRATES THAT THE LOAD FACTORS SPECIFIED IN THE AASHTO LRFD BRIDGE DESIGN SPECIFICATIONS, SECTION 12.12, ARE MET. THE 50 YEAR CREEP MODULUS DATA SPECIFIED IN ASTM F2418 MUST BE USED AS PART OF THE AASHTO STRUCTURAL EVALUATION TO VERIFY LONG-TERM PERFORMANCE.
   c. STRUCTURAL CROSS SECTION DETAIL ON WHICH THE STRUCTURAL EVALUATION IS BASED.
8. CHAMBERS AND END CAPS SHALL BE PRODUCED AT AN ISO 9001 CERTIFIED MANUFACTURING FACILITY.

IMPORTANT - NOTES FOR THE BIDDING AND INSTALLATION OF MC-4500 CHAMBER SYSTEM

1. STORMTECH MC-4500 CHAMBERS SHALL NOT BE INSTALLED UNTIL THE MANUFACTURER'S REPRESENTITIVE HAS COMPLETED A PRE-CONSTRUCTION MEETING WITH THE INSTALLERS.
2. STORMTECH MC-4500 CHAMBERS SHALL BE INSTALLED IN ACCORDANCE WITH THE "STORMTECH MC-3500/MC-4500 CONSTRUCTION GUIDE".
3. CHAMBERS ARE NOT TO BE BACKFILLED WITH A DOZER OR EXCAVATOR SITUATED OVER THE CHAMBERS.

   STORMTECH RECOMMENDS 3 BACKFILL METHODS:
   - STONESHOOTER LOCATED OFF THE CHAMBER BED.
   - BACKFILL AS ROWS ARE BUILT USING AN EXCAVATOR ON THE FOUNDATION STONE OR SUBGRADE.
   - BACKFILL FROM OUTSIDE THE EXCAVATION USING A LONG BOOM HOE OR EXCAVATOR.
4. THE FOUNDATION STONE SHALL BE LEVELED AND COMPACTED PRIOR TO PLACING CHAMBERS.
5. JOINTS BETWEEN CHAMBERS SHALL BE PROPERLY SEATED PRIOR TO PLACING STONE. INSTALL (6) SCREWS (FASTENAL #12-11X1") AT EACH JOINT AS SHOWN IN THE "MC-3500/MC-4500 CONSTRUCTION GUIDE"; (3) SCREWS ON EACH SIDE OF THE JOINT.
6. MAINTAIN MINIMUM - 9" (230 mm) SPACING BETWEEN THE CHAMBER ROWS.
7. INLET AND OUTLET MANIFOLDS MUST BE INSERTED A MINIMUM OF 12" (300 mm) INTO CHAMBER END CAPS.
8. EMBEDMENT STONE SURROUNDING CHAMBERS MUST BE A CLEAN, CRUSHED, ANGULAR STONE 3/4-2" (20-50 mm) MEETING THE AASHTO M43 DESIGNATION OF #3 OR #4.
9. STONE SHALL BE BROUGHT UP EVENLY AROUND CHAMBERS SO AS NOT TO DISTORT THE CHAMBER SHAPE. STONE DEPTHS SHOULD NEVER DIFFER BY MORE THAN 12" (300 mm) BETWEEN ADJACENT CHAMBER ROWS.
10. STONE MUST BE PLACED ON THE TOP CENTER OF THE CHAMBER TO ANCHOR THE CHAMBERS IN PLACE AND PRESERVE ROW SPACING.
11. ADS RECOMMENDS THE USE OF "FLEXSTORM CATCH IT" INSERTS DURING CONSTRUCTION FOR ALL INLETS TO PROTECT THE SUBSURFACE STORMWATER MANAGEMENT SYSTEM FROM CONSTRUCTION SITE RUNOFF.

NOTES FOR CONSTRUCTION EQUIPMENT

1. STORMTECH MC-4500 CHAMBERS SHALL BE INSTALLED IN ACCORDANCE WITH THE "STORMTECH MC-3500/MC-4500 CONSTRUCTION GUIDE".
2. THE USE OF EQUIPMENT OVER MC-4500 CHAMBERS IS LIMITED:
   - NO EQUIPMENT IS ALLOWED ON BARE CHAMBERS.
   - NO RUBBER TIRED LOADER, DUMP TRUCK, OR EXCAVATORS ARE ALLOWED UNTIL PROPER FILL DEPTHS ARE REACHED IN ACCORDANCE WITH THE "STORMTECH MC-3500/MC-4500 CONSTRUCTION GUIDE".
   - WEIGHT LIMITS FOR CONSRUCTION EQUIPMENT CAN BE FOUND IN THE "STORMTECH MC-3500/MC-4500 CONSTRUCTION GUIDE".
3. FULL 36" (900 mm) OF STABILIZED COVER MATERIALS OVER THE CHAMBERS IS REQUIRED FOR DUMP TRUCK TRAVEL OR DUMPING.

USE OF A DOZER TO PUSH EMBEDMENT STONE BETWEEN THE ROWS OF CHAMBERS MAY CAUSE DAMAGE TO CHAMBERS AND IS NOT AN ACCEPTABLE BACKFILL METHOD. ANY CHAMBERS DAMAGED BY USING THE "DUMP AND PUSH" METHOD ARE NOT COVERED UNDER THE STORMTECH STANDARD WARRANTY.

CONTACT STORMTECH AT 1-888-892-2694 WITH ANY QUESTIONS ON INSTALLATION REQUIREMENTS OR WEIGHT LIMITS FOR CONSTRUCTION EQUIPMENT.

©2013 ADS, INC.

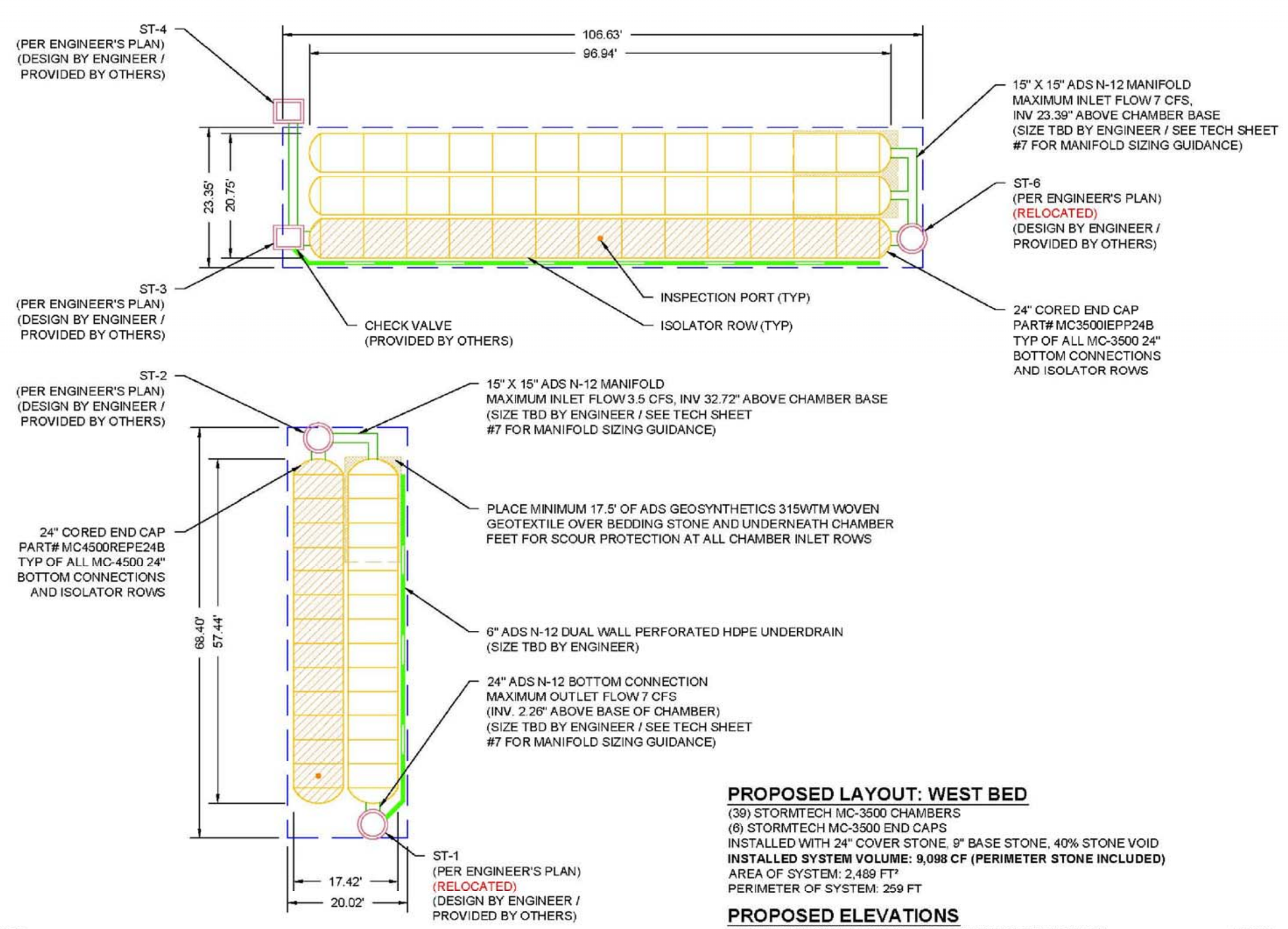

PROPOSED LAYOUT: SOUTHWEST BED

(26) STORMTECH MC-4500 CHAMBERS
(4) STORMTECH MC-4500 END CAPS
INSTALLED WITH 12" COVER STONE, 9" BASE STONE, 40% STONE VOID
INSTALLED SYSTEM VOLUME: 5,443 CF (PERIMTER STONE INCLUDED)
AREA OF SYSTEM: 1,369 FT²
PERIMETER OF SYSTEM: 176 FT

PROPOSED ELEVATIONS

MAXIMUM ALLOWABLE GRADE (TOP OF PAVEMENT/UNPAVED):	893.75
MINIMUM ALLOWABLE GRADE (UNPAVED WITH TRAFFIC):	889.25
MINIMUM ALLOWABLE GRADE (UNPAVED NO TRAFFIC):	888.75
MINIMUM ALLOWABLE GRADE (BASE OF FLEXIBLE PAVEMENT):	888.75
MINIMUM ALLOWABLE GRADE (TOP OF REINFORCED CONCRETE PAVEMENT):	888.75
TOP OF STONE:	887.75
TOP OF CHAMBER:	886.75
15" TOP MANIFOLD INVERT:	884.48
24" ISOLATOR ROW INVERT:	881.94
BOTTOM OF CHAMBER:	881.75
UNDERDRAIN INVERT:	881.00
BOTTOM OF STONE:	881.00

PROPOSED LAYOUT: WEST BED

(39) STORMTECH MC-3500 CHAMBERS
(6) STORMTECH MC-3500 END CAPS
INSTALLED WITH 24" COVER STONE, 9" BASE STONE, 40% STONE VOID
INSTALLED SYSTEM VOLUME: 9,098 CF (PERIMETER STONE INCLUDED)
AREA OF SYSTEM: 2,489 FT²
PERIMETER OF SYSTEM: 259 FT

PROPOSED ELEVATIONS

MAXIMUM ALLOWABLE GRADE (TOP OF PAVEMENT/UNPAVED):	894.00
MINIMUM ALLOWABLE GRADE (UNPAVED WITH TRAFFIC):	888.50
MINIMUM ALLOWABLE GRADE (UNPAVED NO TRAFFIC):	888.00
MINIMUM ALLOWABLE GRADE (BASE OF FLEXIBLE PAVEMENT):	888.00
MINIMUM ALLOWABLE GRADE (TOP OF REINFORCED CONCRETE PAVEMENT):	888.00
TOP OF STONE:	888.00
TOP OF CHAMBER:	886.00
15" TOP MANIFOLD INVERT:	884.20
24" ISOLATOR ROW & OUTLET STUB INVERT:	882.42
BOTTOM OF CHAMBER:	882.25
UNDERDRAIN INVERT:	881.50
BOTTOM OF STONE:	881.50

NORTHWALK RESIDENTIAL WESTFIELD, INDIANA
DATE: 5-5-14 DRAWN: SKR
PROJECT #: 45526 CHECKED: GFI

REV	DRW	CHK	DESCRIPTION
5-7-14	SKR	KAM	PER ENGINEER'S PLAN

StormTech® Detention • Retention • Water Quality
70 INWOOD ROAD, SUITE 3 | ROCKY HILL | CT | 06067
860-529-8188 | 888-892-2694 | WWW.STORMTECH.COM

ADS ADVANCED DRAINAGE SYSTEMS, INC.
4640 TRUEMAN BLVD
HILLIARD, OH 43026
1-800-733-7473

0 20' 40'

THIS DRAWING HAS BEEN PREPARED BASED ON INFORMATION PROVIDED TO ADS UNDER THE DIRECTION OF THE SITE DESIGN ENGINEER OR OTHER PROJECT REPRESENTATIVE. THE SITE DESIGN ENGINEER SHALL REVIEW THIS DRAWING PRIOR TO CONSTRUCTION. IT IS THE ULTIMATE RESPONSIBILITY OF THE SITE DESIGN ENGINEER TO ENSURE THAT THE PRODUCT(S) DEPICTED AND ALL ASSOCIATED DETAILS MEET ALL APPLICABLE LAWS, REGULATIONS, AND PROJECT REQUIREMENTS.

SHEET 3 OF 9

ACCEPTABLE FILL MATERIALS: STORMTECH MC-4500 CHAMBER SYSTEMS

	MATERIAL LOCATION	DESCRIPTION	AASHTO MATERIAL CLASSIFICATIONS	COMPACTION / DENSITY REQUIREMENT
D	**FINAL FILL:** FILL MATERIAL FOR LAYER 'D' STARTS FROM THE TOP OF THE 'C' LAYER TO THE BOTTOM OF FLEXIBLE PAVEMENT OR UNPAVED FINISHED GRADE ABOVE. NOTE THAT PAVEMENT SUBBASE MAY BE PART OF THE 'D' LAYER	ANY SOIL/ROCK MATERIALS, NATIVE SOILS, OR PER ENGINEER'S PLANS. CHECK PLANS FOR PAVEMENT SUBGRADE REQUIREMENTS.	N/A	PREPARE PER SITE DESIGN ENGINEER'S PLANS. PAVED INSTALLATIONS MAY HAVE STRINGENT MATERIAL AND PREPARATION REQUIREMENTS.
C	**INITIAL FILL:** FILL MATERIAL FOR LAYER 'C' STARTS FROM THE TOP OF THE EMBEDMENT STONE ('B' LAYER) TO 24" (600 mm) ABOVE THE TOP OF THE CHAMBER. NOTE THAT PAVEMENT SUBBASE MAY BE A PART OF THE 'C' LAYER.	GRANULAR WELL-GRADED SOIL/AGGREGATE MIXTURES, <35% FINES OR PROCESSED AGGREGATE. MOST PAVEMENT SUBBASE MATERIALS CAN BE USED IN LIEU OF THIS LAYER.	AASHTO M145[1] A-1, A-2-4, A-3 OR AASHTO M43[1] 3, 357, 4, 467, 5, 56, 57, 6, 67, 68, 7, 78, 8, 89, 9, 10	BEGIN COMPACTIONS AFTER 24" (600 mm) OF MATERIAL OVER THE CHAMBERS IS REACHED. COMPACT ADDITIONAL LAYERS IN 12" (300 mm) MAX LIFTS TO A MIN. 95% PROCTOR DENSITY FOR WELL GRADED MATERIAL AND 95% RELATIVE DENSITY FOR PROCESSED AGGREGATE MATERIALS.
B	**EMBEDMENT STONE:** FILL SURROUNDING THE CHAMBERS FROM THE FOUNDATION STONE ('A' LAYER) TO THE 'C' LAYER ABOVE.	CLEAN, CRUSHED, ANGULAR STONE, NOMINAL SIZE DISTRIBUTION BETWEEN 3/4-2 INCH (20-50 mm)	AASHTO M43[1] 3, 4	NO COMPACTION REQUIRED.
A	**FOUNDATION STONE:** FILL BELOW CHAMBERS FROM THE SUBGRADE UP TO THE FOOT (BOTTOM) OF THE CHAMBER.	CLEAN, CRUSHED, ANGULAR STONE, NOMINAL SIZE DISTRIBUTION BETWEEN 3/4-2 INCH (20-50 mm)	AASHTO M43[1] 3, 4	PLATE COMPACT OR ROLL TO ACHIEVE A FLAT SURFACE. [2,3]

PLEASE NOTE:
1. THE LISTED AASHTO DESIGNATIONS ARE FOR GRADATIONS ONLY. THE STONE MUST ALSO BE CLEAN, CRUSHED, ANGULAR. FOR EXAMPLE, A SPECIFICATION FOR #4 STONE WOULD STATE: "CLEAN, CRUSHED, ANGULAR NO. 4 (AASHTO M43) STONE".
2. STORMTECH COMPACTION REQUIREMENTS ARE MET FOR 'A' LOCATION MATERIALS WHEN PLACED AND COMPACTED IN 9" (230 mm) (MAX) LIFTS USING TWO FULL COVERAGES WITH A VIBRATORY COMPACTOR.
3. WHERE INFILTRATION SURFACES MAY BE COMPROMISED BY COMPACTION, FOR STANDARD DESIGN LOAD CONDITIONS, A FLAT SURFACE MAY BE ACHIEVED BY RAKING OR DRAGGING WITHOUT COMPACTION EQUIPMENT. FOR SPECIAL LOAD DESIGNS, CONTACT STORMTECH FOR COMPACTION REQUIREMENTS.

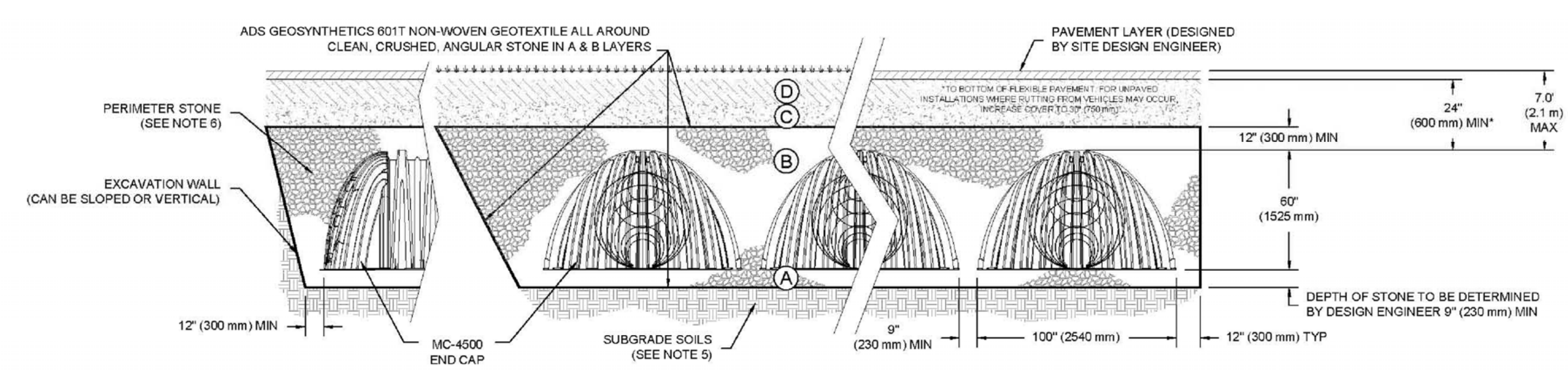

NOTES:

1. MC-4500 CHAMBERS SHALL CONFORM TO THE REQUIREMENTS OF ASTM F2418 "STANDARD SPECIFICATION FOR POLYPROPYLENE (PP) CORRUGATED WALL STORMWATER COLLECTION CHAMBERS".
2. MC-4500 CHAMBERS SHALL BE DESIGNED IN ACCORDANCE WITH ASTM F2787 "STANDARD PRACTICE FOR STRUCTURAL DESIGN OF THERMOPLASTIC CORRUGATED WALL STORMWATER COLLECTION CHAMBERS".
3. "ACCEPTABLE FILL MATERIALS" TABLE ABOVE PROVIDES MATERIAL LOCATIONS, DESCRIPTIONS, GRADATIONS, AND COMPACTION REQUIREMENTS FOR FOUNDATION, EMBEDMENT, AND FILL MATERIALS.
4. THE "SITE DESIGN ENGINEER" REFERS TO THE ENGINEER RESPONSIBLE FOR THE DESIGN AND LAYOUT OF THE STORMTECH CHAMBERS FOR THIS PROJECT.
5. THE SITE DESIGN ENGINEER IS RESPONSIBLE FOR ASSESSING THE BEARING RESISTANCE (ALLOWABLE BEARING CAPACITY) OF THE SUBGRADE SOILS AND THE DEPTH OF FOUNDATION STONE WITH CONSIDERATION FOR THE RANGE OF EXPECTED SOIL MOISTURE CONDITIONS.
6. PERIMETER STONE MUST BE EXTENDED HORIZONTALLY TO THE EXCAVATION WALL FOR BOTH VERTICAL AND SLOPED EXCAVATION WALLS.
7. ONCE LAYER 'C' IS PLACED, ANY SOIL/MATERIAL CAN BE PLACED IN LAYER 'D' UP TO THE FINISHED GRADE. MOST PAVEMENT SUBBASE SOILS CAN BE USED TO REPLACE THE MATERIAL REQUIREMENTS OF LAYER 'C' OR 'D' AT THE SITE DESIGN ENGINEER'S DISCRETION.

NORTHWALK RESIDENTIAL WESTFIELD, INDIANA
DATE: 5-5-14 DRAWN: SKR
PROJECT #: 45526 CHECKED: GFI

REV	DRW	CHK	DESCRIPTION
5-7-14	SKR	KAM	PER ENGINEER'S PLAN

StormTech® Detention • Retention • Water Quality
70 INWOOD ROAD, SUITE 3 | ROCKY HILL | CT | 06067
860-529-8188 | 888-892-2694 | WWW.STORMTECH.COM

ADS ADVANCED DRAINAGE SYSTEMS, INC.
4640 TRUEMAN BLVD
HILLIARD, OH 43026
1-800-733-7473

THIS DRAWING HAS BEEN PREPARED BASED ON INFORMATION PROVIDED TO ADS UNDER THE DIRECTION OF THE SITE DESIGN ENGINEER OR OTHER PROJECT REPRESENTATIVE. THE SITE DESIGN ENGINEER SHALL REVIEW THIS DRAWING PRIOR TO CONSTRUCTION. IT IS THE ULTIMATE RESPONSIBILITY OF THE SITE DESIGN ENGINEER TO ENSURE THAT THE PRODUCT(S) DEPICTED AND ALL ASSOCIATED DETAILS MEET ALL APPLICABLE LAWS, REGULATIONS, AND PROJECT REQUIREMENTS.

SHEET 4 OF 9

ELEMENTS Engineering, LLC
6213 Behner Way
Indianapolis, IN 46250
(317) 490-7054

THE ANDERSON CORPORATION
301 S. UNION STREET
WESTFIELD, IN 46074

NORTHWALK RESIDENTIAL COMMUNITY
740 N. UNION STREET
WESTFIELD, IN 46074

UNDERGROUND DETENTION DETAILS

JENNIFER L. ROBERTS REGISTERED PE19900159 STATE OF INDIANA PROFESSIONAL ENGINEER
APPROVAL PENDING NOT FOR CONSTRUCTION

DATE:

DWN BY:	CC
CHKD. BY:	JR
SCALE:	N/A
DATE:	4/4/2014

PROJECT NUMBER
13-76-001

DESIGN PHASE
PLAN REVIEW

PLAN NUMBER
C704

ACCEPTABLE FILL MATERIALS: STORMTECH MC-3500 CHAMBER SYSTEMS

MATERIAL LOCATION		DESCRIPTION	AASHTO MATERIAL CLASSIFICATIONS	COMPACTION / DENSITY REQUIREMENT
D	**FINAL FILL:** FILL MATERIAL FOR LAYER 'D' STARTS FROM THE TOP OF THE 'C' LAYER TO THE BOTTOM OF FLEXIBLE PAVEMENT OR UNPAVED FINISHED GRADE ABOVE. NOTE THAT PAVEMENT SUBBASE MAY BE PART OF THE 'D' LAYER	ANY SOIL/ROCK MATERIALS, NATIVE SOILS, OR PER ENGINEER'S PLANS. CHECK PLANS FOR PAVEMENT SUBGRADE REQUIREMENTS.	N/A	PREPARE PER SITE DESIGN ENGINEER'S PLANS. PAVED INSTALLATIONS MAY HAVE STRINGENT MATERIAL AND PREPARATION REQUIREMENTS.
C	**INITIAL FILL:** FILL MATERIAL FOR LAYER 'C' STARTS FROM THE TOP OF THE EMBEDMENT STONE ('B' LAYER) TO 24" (600 mm) ABOVE THE TOP OF THE CHAMBER. NOTE THAT PAVEMENT SUBBASE MAY BE A PART OF THE 'C' LAYER.	GRANULAR WELL-GRADED SOIL/AGGREGATE MIXTURES, <35% FINES OR PROCESSED AGGREGATE. MOST PAVEMENT SUBBASE MATERIALS CAN BE USED IN LIEU OF THIS LAYER.	AASHTO M145[1] A-1, A-2-4, A-3 OR AASHTO M43[1] 3, 357, 4, 467, 5, 56, 57, 6, 67, 68, 7, 78, 8, 89, 9, 10	BEGIN COMPACTIONS AFTER 24" (600 mm) OF MATERIAL OVER THE CHAMBERS IS REACHED. COMPACT ADDITIONAL LAYERS IN 12" (300 mm) MAX LIFTS TO A MIN. 95% PROCTOR DENSITY FOR WELL GRADED MATERIAL AND 95% RELATIVE DENSITY FOR PROCESSED AGGREGATE MATERIALS.
B	**EMBEDMENT STONE:** FILL SURROUNDING THE CHAMBERS FROM THE FOUNDATION STONE ('A' LAYER) TO THE 'C' LAYER ABOVE.	CLEAN, CRUSHED, ANGULAR STONE, NOMINAL SIZE DISTRIBUTION BETWEEN 3/4-2 INCH (20-50 mm)	AASHTO M43[1] 3, 4	NO COMPACTION REQUIRED.
A	**FOUNDATION STONE:** FILL BELOW CHAMBERS FROM THE SUBGRADE UP TO THE FOOT (BOTTOM) OF THE CHAMBER.	CLEAN, CRUSHED, ANGULAR STONE, NOMINAL SIZE DISTRIBUTION BETWEEN 3/4-2 INCH (20-50 mm)	AASHTO M43[1] 3, 4	PLATE COMPACT OR ROLL TO ACHIEVE A FLAT SURFACE.[2 3]

PLEASE NOTE:
1. THE LISTED AASHTO DESIGNATIONS ARE FOR GRADATIONS ONLY. THE STONE MUST ALSO BE CLEAN, CRUSHED, ANGULAR. FOR EXAMPLE, A SPECIFICATION FOR #4 STONE WOULD STATE: "CLEAN, CRUSHED, ANGULAR NO. 4 (AASHTO M43) STONE".
2. STORMTECH COMPACTION REQUIREMENTS ARE MET FOR 'A' LOCATION MATERIALS WHEN PLACED AND COMPACTED IN 9" (230 mm) (MAX) LIFTS USING TWO FULL COVERAGES WITH A VIBRATORY COMPACTOR.
3. WHERE INFILTRATION SURFACES MAY BE COMPROMISED BY COMPACTION, FOR STANDARD DESIGN LOAD CONDITIONS, A FLAT SURFACE MAY BE ACHIEVED BY RAKING OR DRAGGING WITHOUT COMPACTION EQUIPMENT. FOR SPECIAL LOAD DESIGNS, CONTACT STORMTECH FOR COMPACTION REQUIREMENTS.

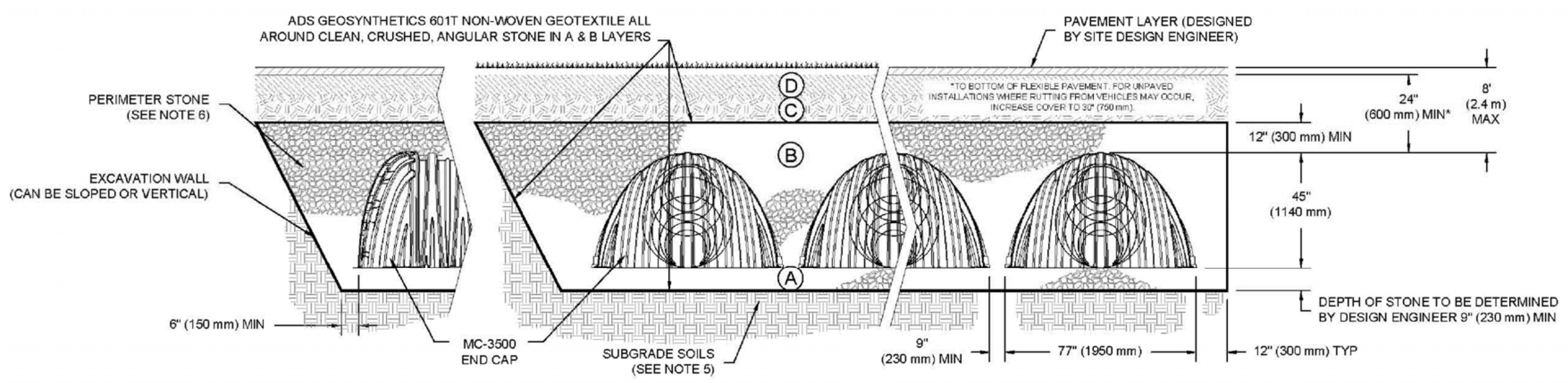

NOTES:

1. MC-3500 CHAMBERS SHALL CONFORM TO THE REQUIREMENTS OF ASTM F2418 "STANDARD SPECIFICATION FOR POLYPROPYLENE (PP) CORRUGATED WALL STORMWATER COLLECTION CHAMBERS".
2. MC-3500 CHAMBERS SHALL BE DESIGNED IN ACCORDANCE WITH ASTM F2787 "STANDARD PRACTICE FOR STRUCTURAL DESIGN OF THERMOPLASTIC CORRUGATED WALL STORMWATER COLLECTION CHAMBERS".
3. "ACCEPTABLE FILL MATERIALS" TABLE ABOVE PROVIDES MATERIAL LOCATIONS, DESCRIPTIONS, GRADATIONS, AND COMPACTION REQUIREMENTS FOR FOUNDATION, EMBEDMENT, AND FILL MATERIALS.
4. THE "SITE DESIGN ENGINEER" REFERS TO THE ENGINEER RESPONSIBLE FOR THE DESIGN AND LAYOUT OF THE STORMTECH CHAMBERS FOR THIS PROJECT.
5. THE SITE DESIGN ENGINEER IS RESPONSIBLE FOR ASSESSING THE BEARING RESISTANCE (ALLOWABLE BEARING CAPACITY) OF THE SUBGRADE SOILS AND THE DEPTH OF FOUNDATION STONE WITH CONSIDERATION FOR THE RANGE OF EXPECTED SOIL MOISTURE CONDITIONS.
6. PERIMETER STONE MUST BE EXTENDED HORIZONTALLY TO THE EXCAVATION WALL FOR BOTH VERTICAL AND SLOPED EXCAVATION WALLS.
7. ONCE LAYER 'C' IS PLACED, ANY SOIL/MATERIAL CAN BE PLACED IN LAYER 'D' UP TO THE FINISHED GRADE. MOST PAVEMENT SUBBASE SOILS CAN BE USED TO REPLACE THE MATERIAL REQUIREMENTS OF LAYER 'C' OR 'D' AT THE SITE DESIGN ENGINEER'S DISCRETION.

NORTHWALK RESIDENTIAL
WESTFIELD, INDIANA
DATE: 5-5-14 DRAWN: SKR
PROJECT #: 45526 CHECKED: GFI

REV	DRW	CHK	DESCRIPTION
5-7-14	SKR	KAM	PER ENGINEER'S PLAN

StormTech
Detention • Retention • Water Quality
70 INWOOD ROAD, SUITE 3 | ROCKY HILL | CT | 06067
860-529-8188 | 888-892-2694 | WWW.STORMTECH.COM

ADS ADVANCED DRAINAGE SYSTEMS, INC.
4640 TRUEMAN BLVD
HILLIARD, OH 43026
1-800-733-7473

THIS DRAWING HAS BEEN PREPARED BASED ON INFORMATION PROVIDED TO ADS UNDER THE DIRECTION OF THE SITE DESIGN ENGINEER OR OTHER PROJECT REPRESENTATIVE. THE SITE DESIGN ENGINEER SHALL REVIEW THIS DRAWING PRIOR TO CONSTRUCTION. IT IS THE ULTIMATE RESPONSIBILITY OF THE SITE DESIGN ENGINEER TO ENSURE THAT THE PRODUCT(S) DEPICTED AND ALL ASSOCIATED DETAILS MEET ALL APPLICABLE LAWS, REGULATIONS, AND PROJECT REQUIREMENTS.

SHEET 5 OF 9

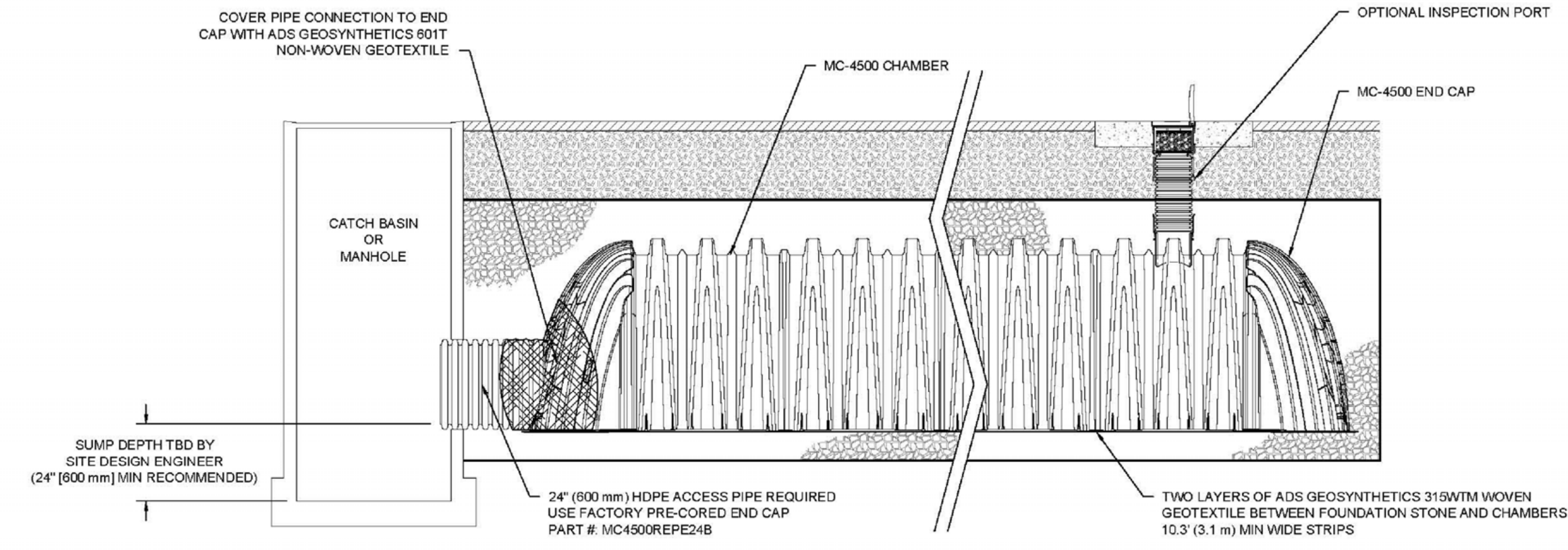

MC-4500 ISOLATOR ROW DETAIL
NTS

INSPECTION & MAINTENANCE

STEP 1) INSPECT ISOLATOR ROW FOR SEDIMENT
- A. INSPECTION PORTS (IF PRESENT)
  - A.1. REMOVE/OPEN LID ON NYLOPLAST INLINE DRAIN
  - A.2. REMOVE AND CLEAN FLEXSTORM FILTER IF INSTALLED
  - A.3. USING A FLASHLIGHT AND STADIA ROD, MEASURE DEPTH OF SEDIMENT AND RECORD ON MAINTENANCE LOG
  - A.4. LOWER A CAMERA INTO ISOLATOR ROW FOR VISUAL INSPECTION OF SEDIMENT LEVELS (OPTIONAL)
  - A.5. IF SEDIMENT IS AT, OR ABOVE, 3" (80 mm) PROCEED TO STEP 2. IF NOT, PROCEED TO STEP 3.
- B. ALL ISOLATOR ROWS
  - B.1. REMOVE COVER FROM STRUCTURE AT UPSTREAM END OF ISOLATOR ROW
  - B.2. USING A FLASHLIGHT, INSPECT DOWN THE ISOLATOR ROW THROUGH OUTLET PIPE
    - i) MIRRORS ON POLES OR CAMERAS MAY BE USED TO AVOID A CONFINED SPACE ENTRY
    - ii) FOLLOW OSHA REGULATIONS FOR CONFINED SPACE ENTRY IF ENTERING MANHOLE
  - B.3. IF SEDIMENT IS AT, OR ABOVE, 3" (80 mm) PROCEED TO STEP 2. IF NOT, PROCEED TO STEP 3.

STEP 2) CLEAN OUT ISOLATOR ROW USING THE JETVAC PROCESS
- A. A FIXED CULVERT CLEANING NOZZLE WITH REAR FACING SPREAD OF 45" (1.1 m) OR MORE IS PREFERRED
- B. APPLY MULTIPLE PASSES OF JETVAC UNTIL BACKFLUSH WATER IS CLEAN
- C. VACUUM STRUCTURE SUMP AS REQUIRED

STEP 3) REPLACE ALL COVERS, GRATES, FILTERS, AND LIDS; RECORD OBSERVATIONS AND ACTIONS.

STEP 4) INSPECT AND CLEAN BASINS AND MANHOLES UPSTREAM OF THE STORMTECH SYSTEM.

NOTES

1. INSPECT EVERY 6 MONTHS DURING THE FIRST YEAR OF OPERATION. ADJUST THE INSPECTION INTERVAL BASED ON PREVIOUS OBSERVATIONS OF SEDIMENT ACCUMULATION AND HIGH WATER ELEVATIONS.
2. CONDUCT JETTING AND VACTORING ANNUALLY OR WHEN INSPECTION SHOWS THAT MAINTENANCE IS NECESSARY.

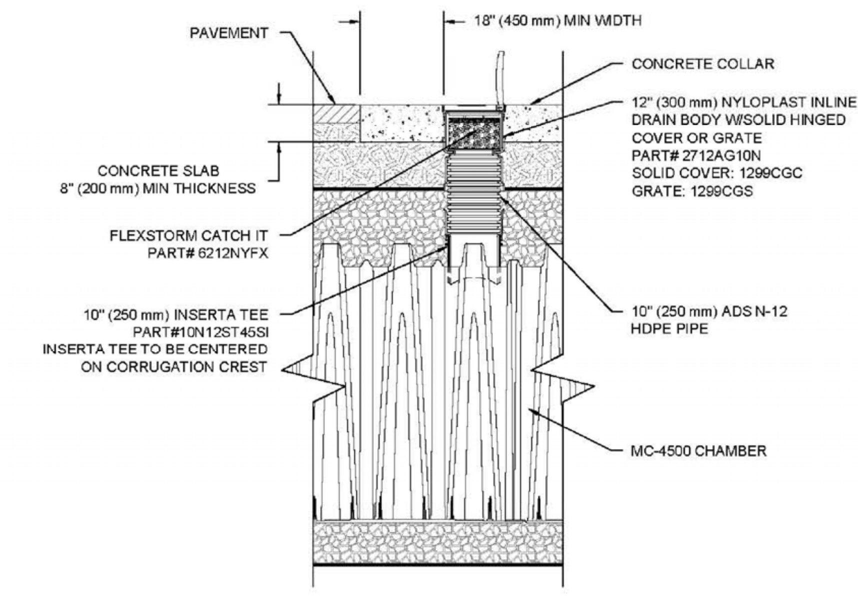

MC-4500 INSPECTION PORT DETAIL
NTS

NORTHWALK RESIDENTIAL
WESTFIELD, INDIANA
DATE: 5-5-14 DRAWN: SKR
PROJECT #: 45526 CHECKED: GFI

SHEET 6 OF 9

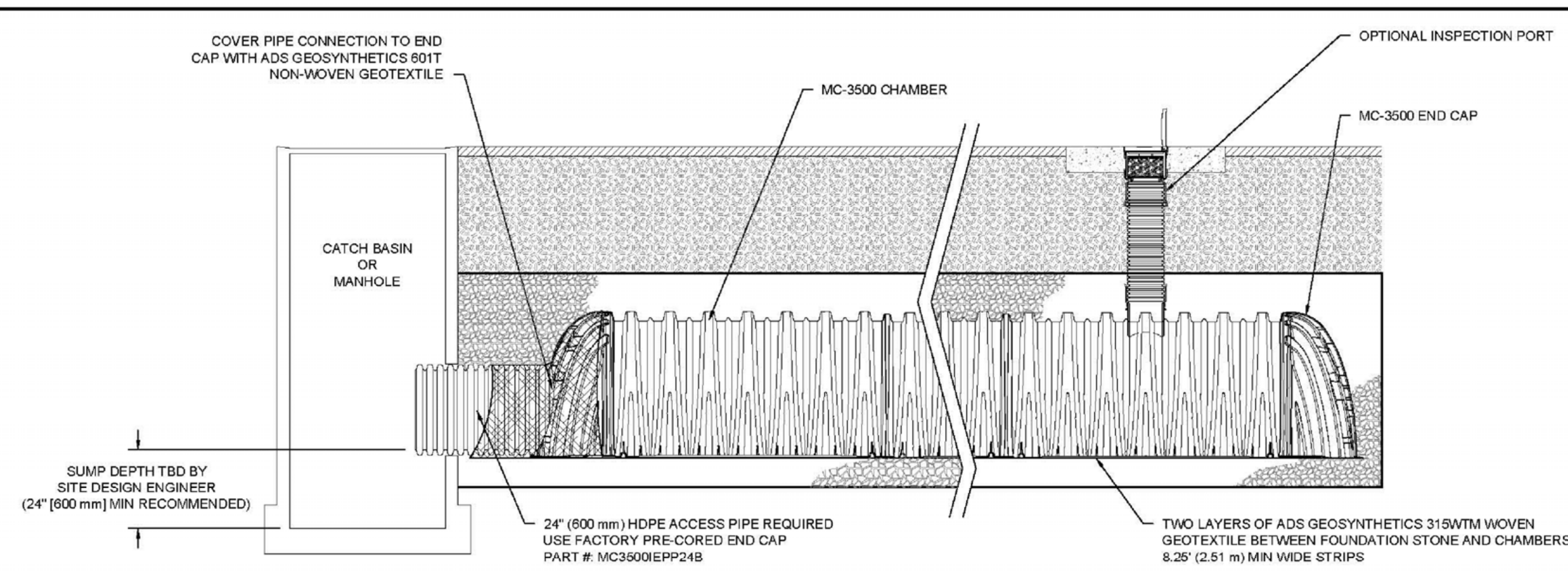

MC-3500 ISOLATOR ROW DETAIL
NTS

INSPECTION & MAINTENANCE

STEP 1) INSPECT ISOLATOR ROW FOR SEDIMENT
- A. INSPECTION PORTS (IF PRESENT)
  - A.1. REMOVE/OPEN LID ON NYLOPLAST INLINE DRAIN
  - A.2. REMOVE AND CLEAN FLEXSTORM FILTER IF INSTALLED
  - A.3. USING A FLASHLIGHT AND STADIA ROD, MEASURE DEPTH OF SEDIMENT AND RECORD ON MAINTENANCE LOG
  - A.4. LOWER A CAMERA INTO ISOLATOR ROW FOR VISUAL INSPECTION OF SEDIMENT LEVELS (OPTIONAL)
  - A.5. IF SEDIMENT IS AT, OR ABOVE, 3" (80 mm) PROCEED TO STEP 2. IF NOT, PROCEED TO STEP 3.
- B. ALL ISOLATOR ROWS
  - B.1. REMOVE COVER FROM STRUCTURE AT UPSTREAM END OF ISOLATOR ROW
  - B.2. USING A FLASHLIGHT, INSPECT DOWN THE ISOLATOR ROW THROUGH OUTLET PIPE
    - i) MIRRORS ON POLES OR CAMERAS MAY BE USED TO AVOID A CONFINED SPACE ENTRY
    - ii) FOLLOW OSHA REGULATIONS FOR CONFINED SPACE ENTRY IF ENTERING MANHOLE
  - B.3. IF SEDIMENT IS AT, OR ABOVE, 3" (80 mm) PROCEED TO STEP 2. IF NOT, PROCEED TO STEP 3.

STEP 2) CLEAN OUT ISOLATOR ROW USING THE JETVAC PROCESS
- A. A FIXED CULVERT CLEANING NOZZLE WITH REAR FACING SPREAD OF 45" (1.1 m) OR MORE IS PREFERRED
- B. APPLY MULTIPLE PASSES OF JETVAC UNTIL BACKFLUSH WATER IS CLEAN
- C. VACUUM STRUCTURE SUMP AS REQUIRED

STEP 3) REPLACE ALL COVERS, GRATES, FILTERS, AND LIDS; RECORD OBSERVATIONS AND ACTIONS.

STEP 4) INSPECT AND CLEAN BASINS AND MANHOLES UPSTREAM OF THE STORMTECH SYSTEM.

NOTES

1. INSPECT EVERY 6 MONTHS DURING THE FIRST YEAR OF OPERATION. ADJUST THE INSPECTION INTERVAL BASED ON PREVIOUS OBSERVATIONS OF SEDIMENT ACCUMULATION AND HIGH WATER ELEVATIONS.
2. CONDUCT JETTING AND VACTORING ANNUALLY OR WHEN INSPECTION SHOWS THAT MAINTENANCE IS NECESSARY.

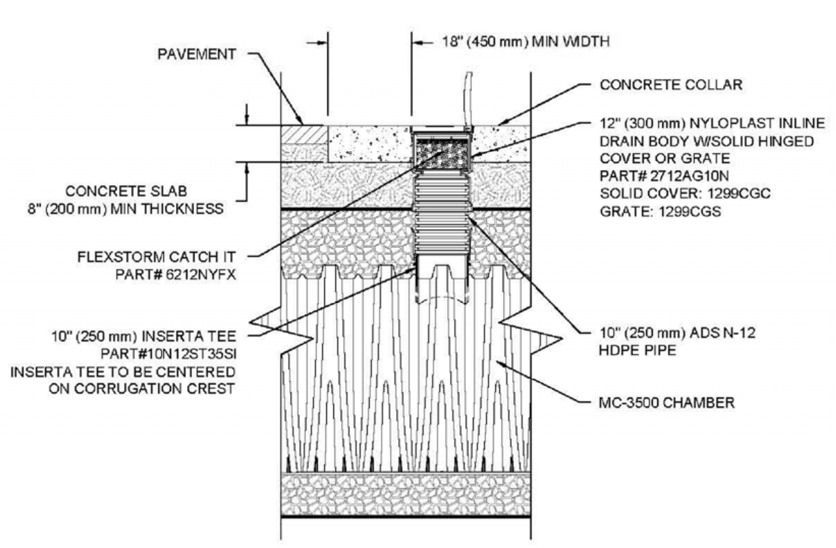

MC-3500 INSPECTION PORT DETAIL
NTS

SHEET 7 OF 9

MC-4500 TECHNICAL SPECIFICATION
NTS

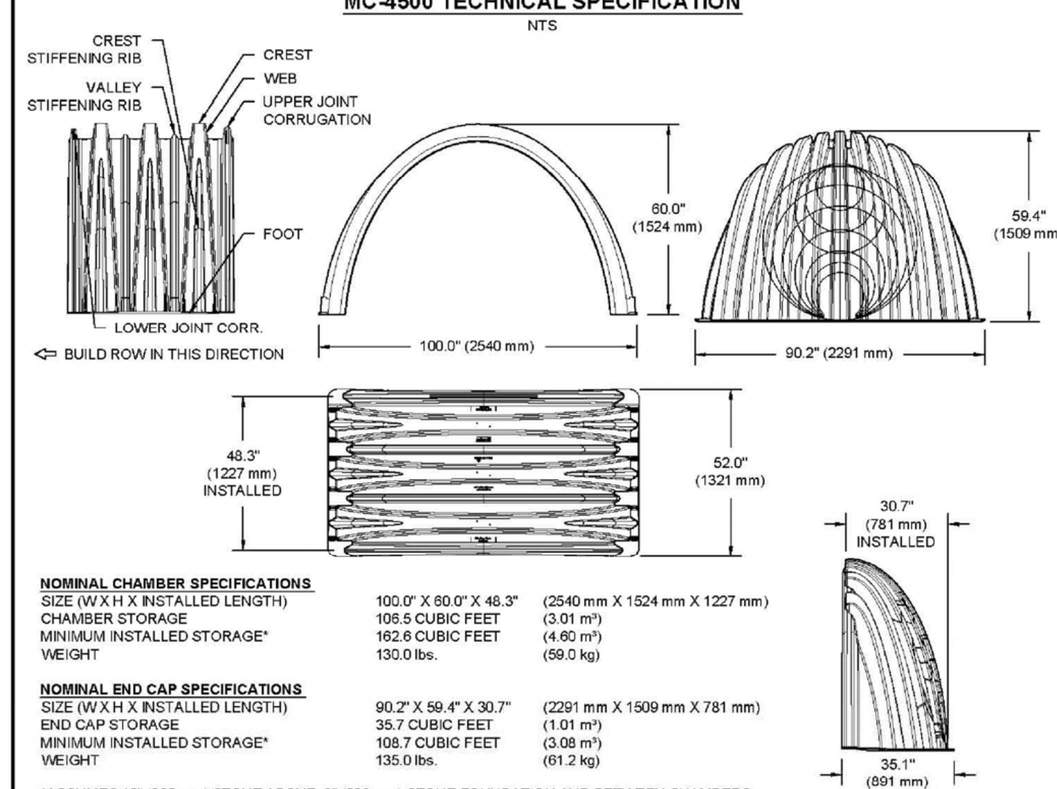

NOMINAL CHAMBER SPECIFICATIONS

SIZE (W X H X INSTALLED LENGTH)	100.0" X 60.0" X 48.3"	(2540 mm X 1524 mm X 1227 mm)
CHAMBER STORAGE	106.5 CUBIC FEET	($3.01\ m^3$)
MINIMUM INSTALLED STORAGE*	162.6 CUBIC FEET	($4.60\ m^3$)
WEIGHT	130.0 lbs.	(59.0 kg)

NOMINAL END CAP SPECIFICATIONS

SIZE (W X H X INSTALLED LENGTH)	90.2" X 59.4" X 30.7"	(2291 mm X 1509 mm X 781 mm)
END CAP STORAGE	35.7 CUBIC FEET	($1.01\ m^3$)
MINIMUM INSTALLED STORAGE*	108.7 CUBIC FEET	($3.08\ m^3$)
WEIGHT	135.0 lbs.	(61.2 kg)

*ASSUMES 12" (305 mm) STONE ABOVE, 9" (229 mm) STONE FOUNDATION AND BETWEEN CHAMBERS, 12" (305 mm) STONE PERIMETER IN FRONT OF END CAPS AND 40% STONE POROSITY.

STUBS AT BOTTOM OF END CAP FOR PART NUMBERS ENDING WITH "B"
STUBS AT TOP OF END CAP FOR PART NUMBERS ENDING WITH "T"

PART #	STUB	B	C
MC4500REPE06T	6" (150 mm)	42.54" (1.081 m)	---
MC4500REPE06B		---	0.86" (22 mm)
MC4500REPE08T	8" (200 mm)	40.50" (1.029 m)	---
MC4500REPE08B		---	1.01" (26 mm)
MC4500REPE10T	10" (250 mm)	38.37" (975 mm)	---
MC4500REPE10B		---	1.33" (34 mm)
MC4500REPE12T	12" (300 mm)	35.69" (907 mm)	---
MC4500REPE12B		---	1.55" (39 mm)
MC4500REPE15T	15" (375 mm)	32.72" (831 mm)	---
MC4500REPE15B		---	1.70" (43 mm)
MC4500REPE18T	18" (450 mm)	29.36" (746 mm)	---
MC4500REPE18B		---	1.97" (50 mm)
MC4500REPE24T	24" (600 mm)	23.05" (585 mm)	---
MC4500REPE24B		---	2.26" (57 mm)
MC4500REPE30B	30" (750 mm)	---	2.95" (75 mm)
MC4500REPE36B	36" (900 mm)	---	3.25" (83 mm)
MC4500REPE42B	42" (1050 mm)	---	3.55" (90 mm)

NOTE: ALL DIMENSIONS ARE NOMINAL

CUSTOM PRECORED INVERTS ARE AVAILABLE UPON REQUEST. INVENTORIED MANIFOLDS INCLUDE 12-24" (300-600 mm) SIZE ON SIZE AND 15-48" (375-1200 mm) ECCENTRIC MANIFOLDS.
CUSTOM INVERT LOCATIONS ON THE MC-4500 END CAP CUT IN THE FIELD ARE NOT RECOMMENDED FOR PIPE SIZES GREATER THAN 10" (250 mm)
THE INVERT LOCATION IN COLUMN 'B' ARE THE HIGHTEST POSSIBLE FOR THE PIPE SIZE.

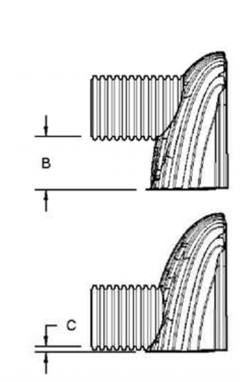

MC-3500 TECHNICAL SPECIFICATION
NTS

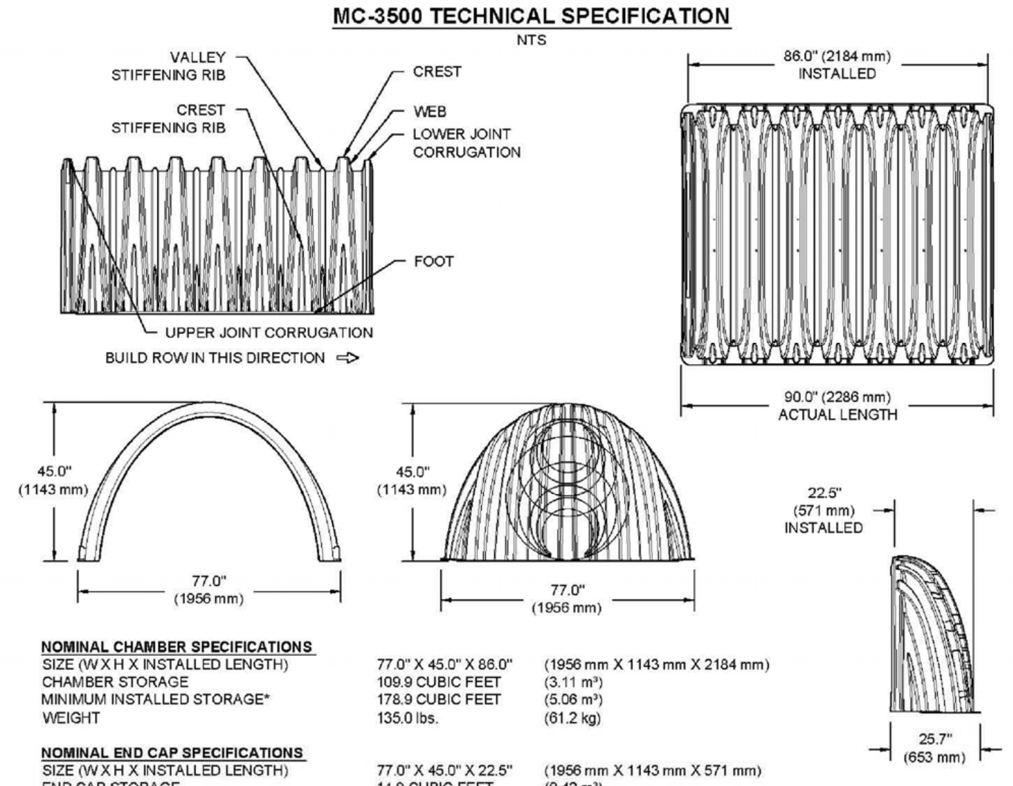

NOMINAL CHAMBER SPECIFICATIONS

SIZE (W X H X INSTALLED LENGTH)	77.0" X 45.0" X 86.0"	(1956 mm X 1143 mm X 2184 mm)
CHAMBER STORAGE	109.9 CUBIC FEET	($3.11\ m^3$)
MINIMUM INSTALLED STORAGE*	178.9 CUBIC FEET	($5.06\ m^3$)
WEIGHT	135.0 lbs.	(61.2 kg)

NOMINAL END CAP SPECIFICATIONS

SIZE (W X H X INSTALLED LENGTH)	77.0" X 45.0" X 22.5"	(1956 mm X 1143 mm X 571 mm)
END CAP STORAGE	14.9 CUBIC FEET	($0.42\ m^3$)
MINIMUM INSTALLED STORAGE*	46.0 CUBIC FEET	($1.30\ m^3$)
WEIGHT	50.0 lbs.	(22.7 kg)

*ASSUMES 12" (305 mm) STONE ABOVE, 9" (229 mm) STONE FOUNDATION AND BETWEEN CHAMBERS, 12" (305 mm) STONE PERIMETER IN FRONT OF END CAPS AND 40% STONE POROSITY

STUBS AT BOTTOM OF END CAP FOR PART NUMBERS ENDING WITH "B"
STUBS AT TOP OF END CAP FOR PART NUMBERS ENDING WITH "T"

PART #	STUB	B	C
MC3500IEPP06T	6" (150 mm)	33.21" (844 mm)	---
MC3500IEPP06B		---	0.66" (17 mm)
MC3500IEPP08T	8" (200 mm)	31.16" (791 mm)	---
MC3500IEPP08B		---	0.81" (21 mm)
MC3500IEPP10T	10" (250 mm)	29.04" (738 mm)	---
MC3500IEPP10B		---	0.93" (24 mm)
MC3500IEPP12T	12" (300 mm)	26.36" (670 mm)	---
MC3500IEPP12B		---	1.35" (34 mm)
MC3500IEPP15T	15" (375 mm)	23.39" (594 mm)	---
MC3500IEPP15B		---	1.50" (38 mm)
MC3500IEPP18T	18" (450 mm)	20.03" (509 mm)	---
MC3500IEPP18B		---	1.77" (45 mm)
MC3500IEPP24T	24" (600 mm)	14.48" (368 mm)	---
MC3500IEPP24B		---	2.06" (52 mm)
MC3500IEPP30B	30" (750 mm)	---	

NOTE: ALL DIMENSIONS ARE NOMINAL

CUSTOM PRECORED INVERTS ARE AVAILABLE UPON REQUEST. INVENTORIED MANIFOLDS INCLUDE 12-24" (300-600 mm) SIZE ON SIZE AND 15-48" (375-1200 mm) ECCENTRIC MANIFOLDS.
CUSTOM INVERT LOCATIONS ON THE MC-3500 END CAP CUT IN THE FIELD ARE NOT RECOMMENDED FOR PIPE SIZES GREATER THAN 10" (250 mm)
THE INVERT LOCATION IN COLUMN 'B' ARE THE HIGHTEST POSSIBLE FOR THE PIPE SIZE.

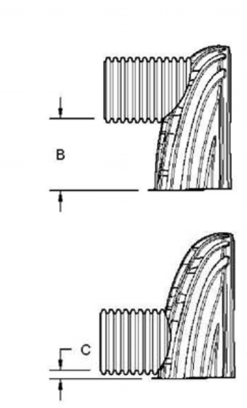

SHEET 8 OF 9

ELEMENTS
Engineering, LLC
6213 Behner Way
Indianapolis, IN 46250
(317) 490-7054

THE ANDERSON CORPORATION
301 S. UNION STREET
WESTFIELD, IN 46074

NORTHWALK RESIDENTIAL COMMUNITY
740 N. UNION STREET
WESTFIELD, IN 46074

UNDERGROUND DETENTION DETAILS

JENNIFER L. ROBERTS
REGISTERED
PE19900150
STATE OF INDIANA
PROFESSIONAL ENGINEER
APPROVAL PENDING NOT FOR CONSTRUCTION

DATE:

DWN BY:	CC
CHKD. BY:	JR
SCALE:	N/A
DATE:	4/4/2014

PROJECT NUMBER
13-76-001

DESIGN PHASE
PLAN REVIEW

PLAN NUMBER
C705

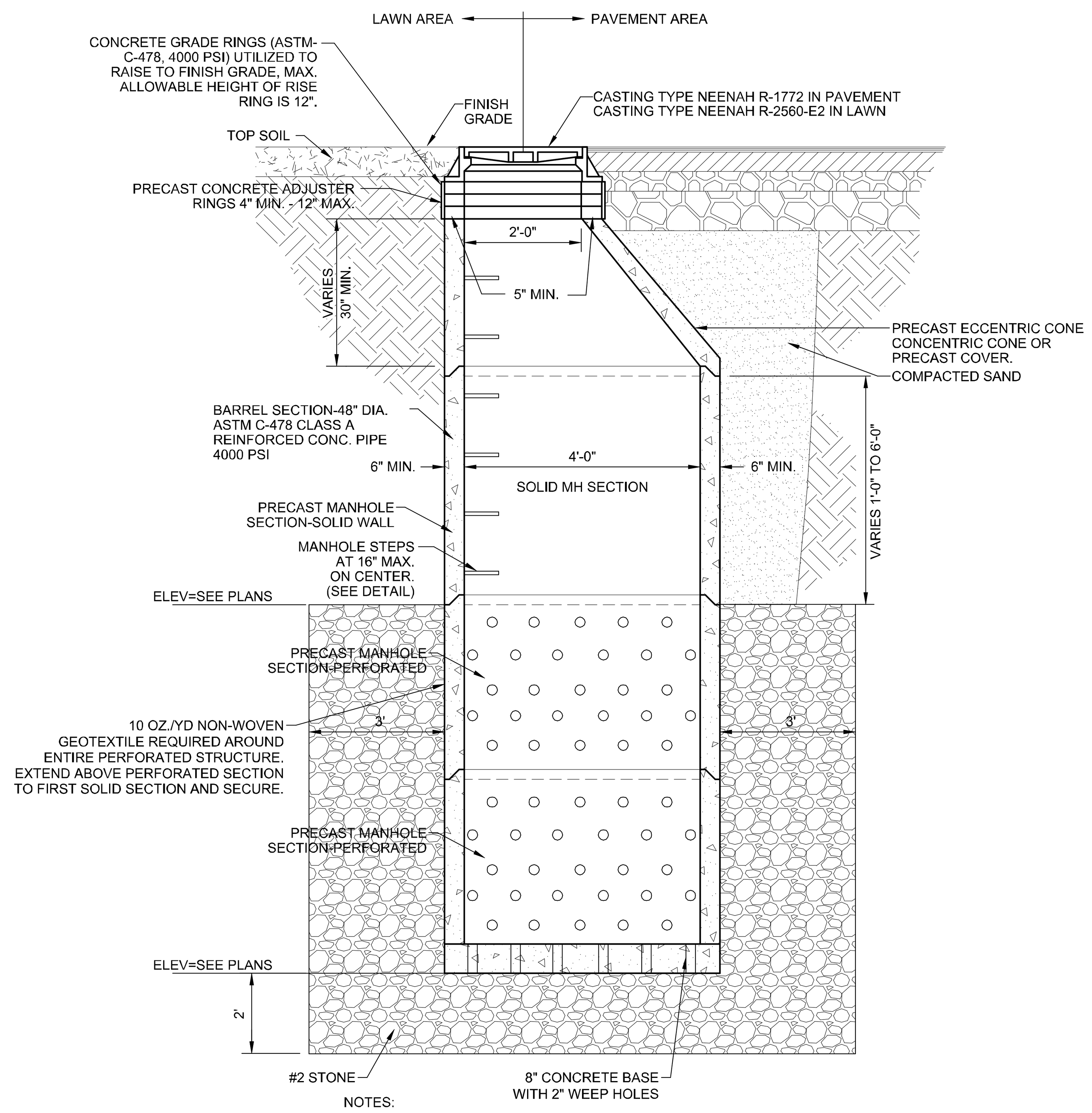

NOTES:
SEE MANUFACTURER'S DETAIL FOR ADDITIONAL INFORMATION ON PERFORATED DRYWALL SECTIONS

SEE PLANS FOR PIPE CONNECTIONS TO AND FROM DRYWELL

ST-DW STORM DRYWELL DETAIL

NOT TO SCALE

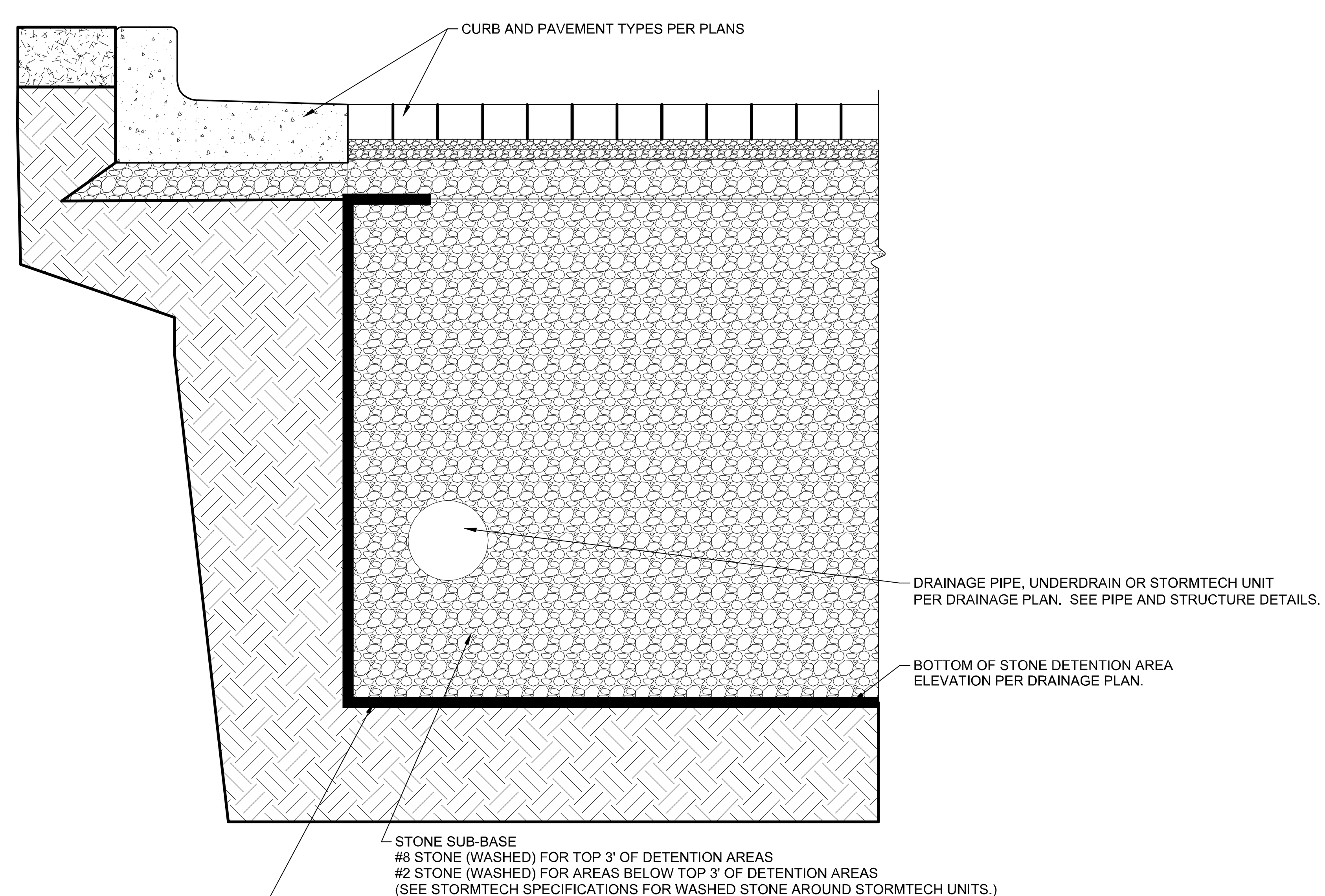

NOTES:

1. STONE STORAGE LAYER TO BE PROTECTED FROM SEDIMENT BY USE OF GEOTEXTILE FABRIC. WRAP ENTIRE STONE STORAGE AREA (SHOWN ON PLANS) WITH GEOTEXTILE DURING CONSTRUCTION. REMOVE GEOTEXTILE ON TOP OF STONE TRENCH IN PAVED AREAS (ONLY) IMMEDIATELY PRIOR TO PAVING. GEOTEXTILE TO REMAIN ON TOP OF STONE DETENTION AREAS LOCATED IN LAWN AREAS. SEAL PIPE PENETRATIONS TO PREVENT SOIL MIGRATION INTO DETENTION STONE.

ST-DT UNDERGROUND DETENTION AREAS IN STONE - DETAIL

NOT TO SCALE

TABLE 1 – MC-3500 Minimum Required Foundation Depth in inches (millimeters)
Assumes 9' (229 mm) row spacing.

Cover Hgt. ft. (m)	Minimum Bearing Resistance for Service Loads ksf (kPa) 4.4 (211)	4.3 (206)	4.2 (201)	4.1 (196)	4.0 (192)	3.9 (187)	3.8 (182)	3.7 (177)	3.6 (172)	3.5 (168)	3.4 (163)	3.3 (158)	3.2 (153)	3.1 (148)	3.0 (144)	2.9 (139)	2.8 (134)	2.7 (129)	2.6 (124)	2.5 (120)	2.4 (115)	2.3 (110)	2.2 (105)	2.1 (101)	2.0 (96)
2.0 (0.61)	9 (229)	9 (229)	9 (229)	9 (229)	9 (229)	9 (229)	9 (229)	9 (229)	9 (229)	9 (229)	9 (229)	9 (229)	9 (229)	9 (229)	9 (229)	9 (229)	9 (229)	9 (229)	9 (229)	12 (305)	12 (305)	12 (305)	15 (381)	15 (381)	15 (381)
2.5 (0.76)	9 (229)	9 (229)	9 (229)	9 (229)	9 (229)	9 (229)	9 (229)	9 (229)	9 (229)	9 (229)	9 (229)	9 (229)	9 (229)	9 (229)	9 (229)	9 (229)	9 (229)	12 (305)	12 (305)	12 (305)	12 (305)	15 (381)	15 (381)	15 (381)	18 (457)
3.0 (0.91)	9 (229)	9 (229)	9 (229)	9 (229)	9 (229)	9 (229)	9 (229)	9 (229)	9 (229)	9 (229)	9 (229)	9 (229)	9 (229)	9 (229)	9 (229)	9 (229)	12 (305)	12 (305)	12 (305)	15 (381)	15 (381)	15 (381)	18 (457)	18 (457)	18 (457)
3.5 (1.07)	9 (229)	9 (229)	9 (229)	9 (229)	9 (229)	9 (229)	9 (229)	9 (229)	9 (229)	9 (229)	9 (229)	9 (229)	9 (229)	9 (305)	12 (305)	12 (305)	12 (305)	12 (305)	15 (381)	15 (381)	15 (381)	18 (457)	18 (457)	24 (610)	24 (610)
4.0 (1.22)	9 (229)	9 (229)	9 (229)	9 (229)	9 (229)	9 (229)	9 (229)	9 (229)	9 (229)	9 (229)	9 (229)	9 (229)	12 (305)	12 (305)	12 (305)	12 (305)	15 (381)	15 (381)	15 (381)	15 (381)	18 (457)	18 (457)	24 (610)	24 (610)	24 (610)
4.5 (1.37)	9 (229)	9 (229)	9 (229)	9 (229)	9 (229)	9 (229)	9 (229)	9 (229)	9 (229)	9 (229)	9 (229)	12 (305)	12 (305)	12 (305)	12 (305)	15 (381)	15 (381)	15 (381)	18 (457)	18 (457)	18 (457)	24 (610)	24 (610)	24 (610)	24 (610)
5.0 (1.52)	9 (229)	9 (229)	9 (229)	9 (229)	9 (229)	9 (229)	9 (229)	9 (229)	9 (229)	12 (305)	12 (305)	12 (305)	12 (305)	15 (381)	15 (381)	15 (381)	15 (381)	18 (457)	18 (457)	18 (457)	24 (610)	24 (610)	24 (610)	24 (610)	30 (762)
5.5 (1.68)	9 (229)	9 (229)	9 (229)	9 (229)	9 (229)	9 (229)	9 (229)	12 (305)	12 (305)	12 (305)	12 (305)	12 (305)	15 (381)	15 (381)	15 (381)	18 (457)	18 (457)	18 (457)	24 (610)	24 (610)	24 (610)	24 (610)	24 (610)	30 (762)	30 (762)
6.0 (1.83)	9 (229)	9 (229)	9 (229)	9 (229)	9 (229)	9 (229)	12 (305)	12 (305)	12 (305)	12 (305)	12 (305)	15 (381)	15 (381)	15 (381)	15 (381)	18 (457)	18 (457)	18 (457)	24 (610)	24 (610)	24 (610)	24 (610)	30 (762)	30 (762)	30 (762)
6.5 (1.98)	9 (229)	9 (229)	9 (229)	9 (229)	9 (229)	12 (305)	12 (305)	12 (305)	12 (305)	12 (305)	15 (381)	15 (381)	15 (381)	15 (381)	18 (457)	18 (457)	18 (457)	24 (610)	24 (610)	24 (610)	24 (610)	30 (762)	30 (762)	30 (762)	30 (762)

NOTE: The design engineer is solely responsible for assessing the bearing resistance (allowable bearing capacity) of the subgrade soils and determining the depth of foundation stone. Subgrade bearing resistance should be assessed with consideration for the range of soil moisture conditions expected under a stormwater system.

7 Call StormTech at **860.529.8188** or **888.892.2694** or visit our website at **www.stormtech.com** for technical and product information.

2.0 Foundations for Chambers

TABLE 2 – MC-4500 Minimum Required Foundation Depth in inches (millimeters)
Assumes 9' (229 mm) row spacing.

Cover Hgt. ft. (m)	Minimum Bearing Resistance for Service Loads ksf (kPa) 4.1 (196)	4.0 (192)	3.9 (187)	3.8 (182)	3.7 (177)	3.6 (172)	3.5 (168)	3.4 (163)	3.3 (158)	3.2 (153)	3.1 (148)	3.0 (144)	2.9 (139)	2.8 (134)	2.7 (129)	2.6 (124)	2.5 (120)	2.4 (115)	2.3 (110)	2.2 (105)	2.1 (101)	2.0 (96)
2.0 (0.61)	9 (229)	9 (229)	9 (229)	9 (229)	9 (229)	9 (229)	9 (229)	9 (229)	9 (229)	9 (229)	9 (229)	9 (229)	9 (229)	9 (229)	12 (305)	12 (305)	12 (305)	15 (381)	15 (381)	18 (457)	18 (457)	24 (610)
2.5 (0.76)	9 (229)	9 (229)	9 (229)	9 (229)	9 (229)	9 (229)	9 (229)	9 (229)	9 (229)	9 (229)	9 (229)	9 (229)	9 (229)	12 (305)	12 (305)	15 (381)	15 (381)	18 (457)	18 (457)	24 (610)	24 (610)	24 (610)
3.0 (0.91)	9 (229)	9 (229)	9 (229)	9 (229)	9 (229)	9 (229)	9 (229)	9 (229)	9 (229)	9 (229)	9 (229)	12 (305)	12 (305)	12 (305)	15 (381)	15 (381)	18 (457)	18 (457)	24 (610)	24 (610)	24 (610)	30 (762)
3.5 (1.07)	9 (229)	9 (229)	9 (229)	9 (229)	9 (229)	9 (229)	9 (229)	9 (229)	9 (229)	12 (305)	12 (305)	12 (305)	15 (381)	15 (381)	18 (457)	18 (457)	24 (610)	24 (610)	24 (610)	30 (762)	30 (762)	36 (914)
4.0 (1.22)	9 (229)	9 (229)	9 (229)	9 (229)	9 (229)	9 (229)	9 (229)	12 (305)	12 (305)	12 (305)	15 (381)	15 (381)	15 (381)	18 (457)	18 (457)	24 (610)	24 (610)	24 (610)	30 (762)	30 (762)	36 (914)	36 (914)
4.5 (1.37)	9 (229)	9 (229)	9 (229)	9 (229)	9 (229)	12 (305)	12 (305)	12 (305)	15 (381)	15 (381)	15 (381)	18 (457)	18 (457)	24 (610)	24 (610)	24 (610)	24 (610)	30 (762)	30 (762)	36 (914)	36 (914)	42 (1067)
5.0 (1.52)	9 (229)	9 (229)	9 (229)	12 (305)	12 (305)	12 (305)	12 (305)	15 (381)	15 (381)	18 (457)	18 (457)	18 (457)	24 (610)	24 (610)	24 (610)	24 (610)	30 (762)	30 (762)	36 (914)	36 (914)	42 (1067)	48 (1219)
5.5 (1.68)	9 (229)	12 (305)	12 (305)	12 (305)	12 (305)	15 (381)	15 (381)	15 (381)	18 (457)	18 (457)	24 (610)	24 (610)	24 (610)	24 (610)	30 (762)	30 (762)	30 (762)	36 (914)	36 (914)	42 (1067)	48 (1219)	54 (1371)
6.0 (1.83)	12 (305)	12 (305)	12 (305)	15 (381)	15 (381)	15 (381)	18 (457)	18 (457)	18 (457)	24 (610)	24 (610)	24 (610)	24 (610)	30 (762)	30 (762)	30 (762)	36 (914)	36 (914)	42 (1067)	42 (1067)	48 (1219)	54 (1372)
6.5 (1.98)	12 (305)	15 (381)	15 (381)	15 (381)	15 (381)	18 (457)	18 (457)	24 (610)	24 (610)	24 (610)	24 (610)	24 (610)	30 (762)	30 (762)	30 (762)	36 (914)	36 (914)	42 (1067)	42 (1067)	48 (1219)	54 (1372)	66 (1676)
7.0 (2.13)	15 (381)	15 (381)	15 (381)	18 (457)	18 (457)	18 (457)	24 (610)	24 (610)	24 (610)	24 (610)	30 (762)	30 (762)	30 (762)	30 (762)	36 (914)	36 (914)	42 (1067)	42 (1067)	48 (1219)	54 (1372)	60 (1524)	66 (1676)

NOTE: The design engineer is solely responsible for assessing the bearing resistance (allowable bearing capacity) of the subgrade soils and determining the depth of foundation stone. Subgrade bearing resistance should be assessed with consideration for the range of soil moisture conditions expected under a stormwater system.

MC-SERIES END CAP INSERTION DETAIL
NTS

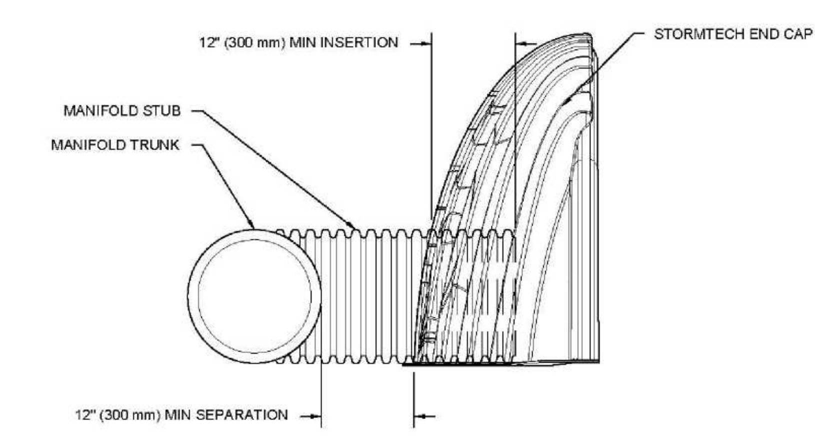

NOTE: MANIFOLD STUB MUST BE LAID HORIZONTAL FOR A PROPER FIT IN END CAP OPENING.

UNDERDRAIN DETAIL
NTS

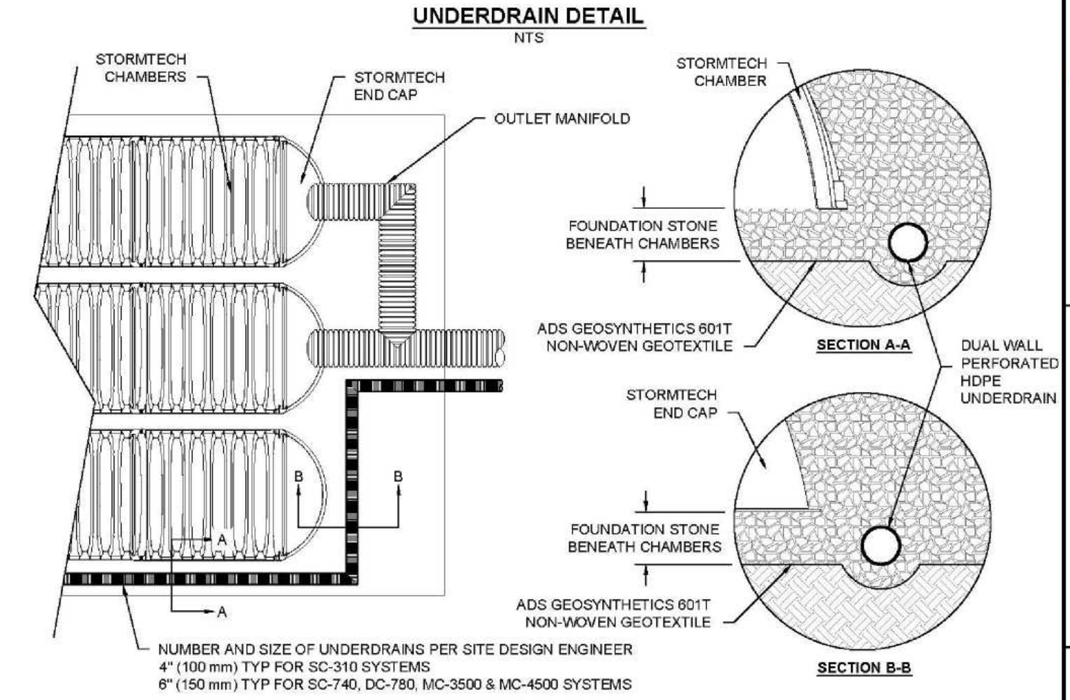

NORTHWALK RESIDENTIAL
WESTFIELD, INDIANA

DATE: 5-5-14 | DRAWN: SKR
PROJECT #: 45526 | CHECKED: GFI

REV	DRW	CHK	DESCRIPTION
5-7-14	SKR	KAM	PER ENGINEER'S PLAN

ADS ADVANCED DRAINAGE SYSTEMS, INC.
4640 TRUEMAN BLVD
HILLIARD, OH 43026
1-800-733-7473

StormTech Detention • Retention • Water Quality
70 INWOOD ROAD, SUITE 3 | ROCKY HILL | CT | 06067
860-529-8188 | 888-892-2694 | WWW.STORMTECH.COM

THIS DRAWING HAS BEEN PREPARED BASED ON INFORMATION PROVIDED TO ADS UNDER THE DIRECTION OF THE SITE DESIGN ENGINEER OR OTHER PROJECT REPRESENTATIVE. THE SITE DESIGN ENGINEER SHALL REVIEW THIS DRAWING PRIOR TO CONSTRUCTION. IT IS THE ULTIMATE RESPONSIBILITY OF THE SITE DESIGN ENGINEER TO ENSURE THAT THE PRODUCT(S) DEPICTED AND ALL ASSOCIATED DETAILS MEET ALL APPLICABLE LAWS, REGULATIONS, AND PROJECT REQUIREMENTS.

SHEET 9 OF 9

ELEMENTS
Engineering, LLC
6213 Behner Way
Indianapolis, IN 46250
(317) 490-7054

THE ANDERSON CORPORATION
301 S. UNION STREET
WESTFIELD, IN 46074

NORTHWALK RESIDENTIAL COMMUNITY
740 N. UNION STREET
WESTFIELD, IN 46074

UNDERGROUND DETENTION DETAILS

JENNIFER L. ROBERTS REGISTERED PE19900155 STATE OF INDIANA PROFESSIONAL ENGINEER
APPROVAL PENDING NOT FOR CONSTRUCTION

DATE:

DWN BY:	CC
CHKD. BY:	JR
SCALE:	N/A
DATE:	5/9/2014

PROJECT NUMBER
13-76-001

DESIGN PHASE
PLAN REVIEW

PLAN NUMBER
C706

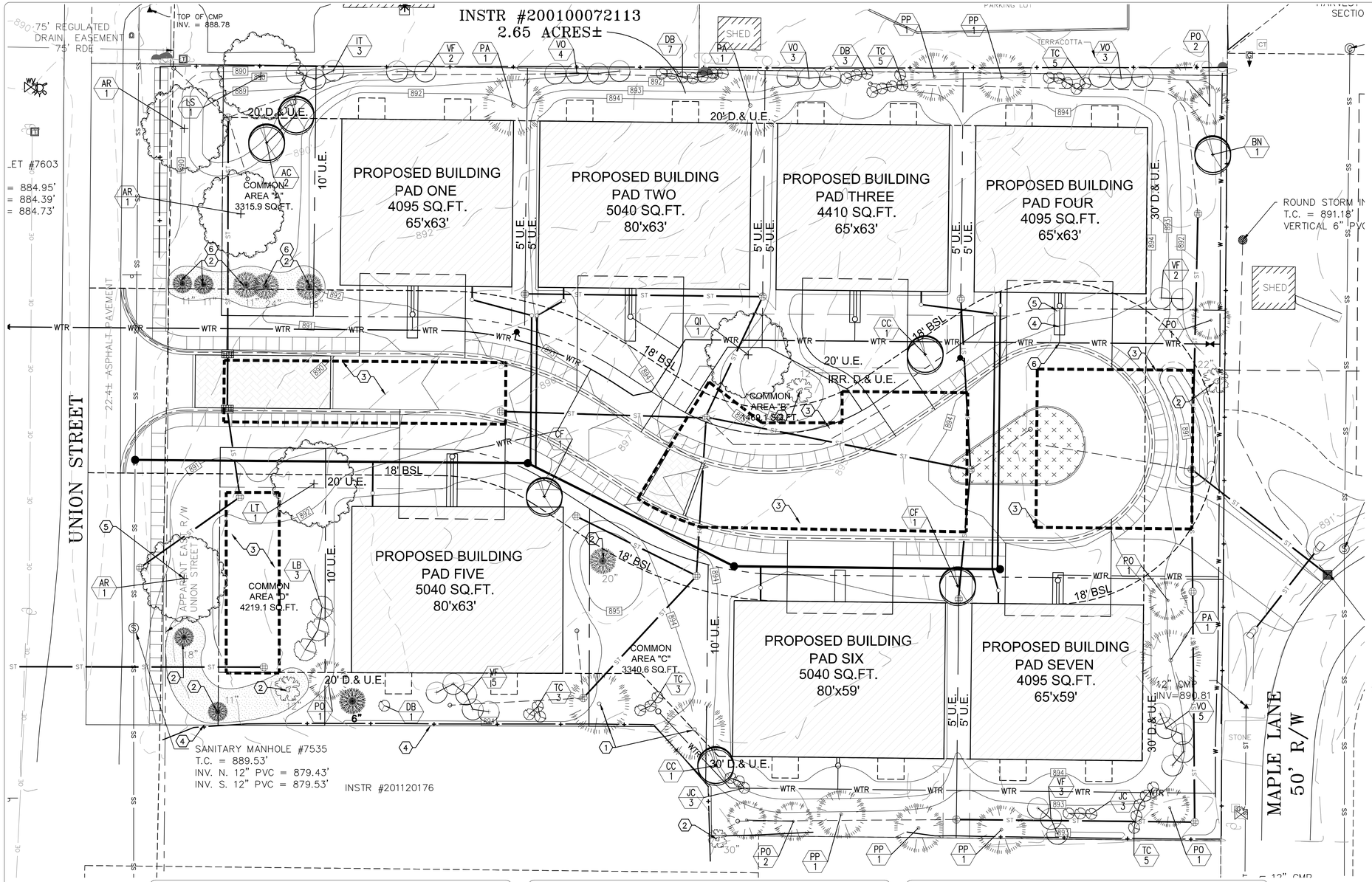

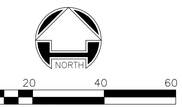

SHEET KEYNOTES:

1. RELOCATED EVERGREEN TREE FROM EXISTING SITE.
2. EXISTING TREE TO REMAIN. SEE TREE PRESERVATION PLAN.
3. UNDERGROUND DETENTION AREAS. SEE DRAINAGE PLAN.
4. EXISTING VEGETATION TO REMAIN ALONG PROPERTY LINE. DO NOT DISTURB.
5. THESE TREES ARE TO BE RELOCATED FROM OTHER LOCATIONS ON THE SITE.
6. THE LOWER LIMBS OF THESE TREES TO BE REMOVED UP TO A HEIGHT OF 12 FEET ABOVE GRADE TO ALLOW FOR ADEQUATE SIGHT DISTANCE. THE LINE OF SIGHT SHALL NOT BE IMPEDED BETWEEN 3 FEET AND 12 FEET.

NOTE:
TREES SHALL NOT BE WITHIN 10' OF STORM SEWER AND SUB-SURFACE DRAIN (SSD) WHERE FEASIBLE. TREES SHALL BE LOCATED AS CLOSE TO THOSE SHOWN ON THIS PLAN AS POSSIBLE. VERIFY ACTUAL LOCATION OF UTILITIES PRIOR TO PLACEMENT OF TREES AND SHRUBS.

TREES TO BE A MINIMUM OF 4' AWAY FROM ALL SIDEWALKS.

UTILITY LEGEND

- INLET OR CATCH BASIN
- SEWER MANHOLE
- WATER MANHOLE
- MANHOLE
- CLEANOUT
- AREA LIGHT
- UTILITY POLE WITH GUY WIRE
- UTILITY POLE WITH RISER
- FLAG POLE
- TRAFFIC POLE
- UTILITY PEDESTAL
- ELECTRIC METER
- ELECTRIC TRANSFORMER
- CONDITIONING UNIT
- UTILITY VALVE
- HYDRANT
- WELL
- WATER VALVE
- WATER METER
- E — OVERHEAD UTILITY LINES
- E — UNDERGROUND ELECTRIC
- FO — UNDERGROUND FIBER OPTIC
- W — UNDERGROUND WATER LINE
- UNDERGROUND STORM SEWER
- UNDERGROUND SANITARY SEWER
- EDGE OF WOODS

LANDSCAPE LEGEND

- EXISTING TREES TO REMAIN (AS NOTED)
- AREA OF NO MOWING UNDER TREES (MULCH OR OTHER APPROVED MATERIAL)
- LOW STATURE NATIVE PLANTINGS MATERIAL TO BE APPROVED BY OWNER

PLANTING SCHEDULE - SHRUBS

LEGEND	KEY	QTY	BOTANICAL NAME	COMMON NAME	SIZE COND	REMARKS	MATURE HEIGHT MATURE SPREAD
SHRUBS							
	IT	3	Itea virginica	Virginia Sweetspire	24" CONT.	Deciduous Shrub	8' 8'
	LB	3	Lindera benzoin	Spice Bush	24" B & B	Deciduous Shrub	8' 8'
	JC	6	Juniperus communis	Common Juniper	No. 3 Cont.	Evergreen Shrub	10' 8'
	VF	12	Viburnum farreri	Fragrant Viburnum	24" B & B	Deciduous Shrub	10' 8'
	VO	15	Viburnum opulus	Cranberrybush	24" B & B	Deciduous Shrub	10' 8'
	DB	11	Daphne x burkwoodii	Burkwood Daphne	24" B & B	Deciduous Shrub	4' 3'
	TC	21	Taxus canadensis	Canada Yew	24" B & B	Evergreen Shrub	4' 7'

PLANTING SCHEDULE - EVERGREEN TREES

LEGEND	KEY	QTY	BOTANICAL NAME	COMMON NAME	SIZE COND	REMARKS	MATURE HEIGHT MATURE SPREAD
SHRUBS							
	PA	3	Picea abies	Norway Spruce	24" B & B	Evergreen Tree	80' 30'
	PO	8	Picea omorika	Serbian Spruce	24" B & B	Evergreen Tree	50' 15'
	PP	5	Picea pungens	Colorado Spruce	24" B & B	Evergreen Tree	60' 20'

PLANTING SCHEDULE - TREES

LEGEND	KEY	QTY	BOTANICAL NAME	COMMON NAME	SIZE COND	REMARKS	MATURE HEIGHT MATURE SPREAD
TREES							
	AR	1	Acer x freemanii 'Jeffersred'	Autumn Blaze Maple	2-1\2" B & B	Deciduous canopy (2 relocated)	50' 45'
	BN	1	Betula nigra	River Birch	8' B & B	Deciduous Shade Tree	50' 40'
	LS	1	Liquidambar styraciflua	Sweet Gum	2-1/2" B & B	Deciduous Shade Tree	40' 25'
	LT	1	Liriodendron tulipifera	Tulip Tree	2-1/2" B & B	Deciduous Shade Tree	70' 40'
	QI	1	Quercus imbricaria	Shingle Oak	2-1\2" B & B	Deciduous Canopy	50'-60' 50'
	AC	2	Amelanchier canadensis	Shadblow Serviceberry	8' B & B	Ornamental Tree	25' 20'
	CC	2	Cercis canadensis	Redbud	8' B & B	Ornamental Tree	25' 25'
	CF	2	Cornus alternifolia	Pagoda Dogwood	1-1/2" B & B	Ornamental Tree	25' 25'

SEE SHEET L102 FOR LANDSCAPE DETAILS.

UTILITY STATEMENT:

THE UTILITIES INDICATED ON THESE PLANS AND ON THE SURVEY HAVE BEEN LOCATED FROM FIELD SURVEY INFORMATION. THE SURVEYOR/ENGINEER MAKES NO GUARANTEES THAT THE UNDERGROUND UTILITIES COMPRISE ALL SUCH UTILITIES IN THE AREA, EITHER IN-SERVICE OR ABANDONED. THE SURVEYOR DOES CERTIFY THAT THEY ARE LOCATED AS ACCURATELY AS POSSIBLE FROM INFORMATION AVAILABLE. THE SURVEYOR/ENGINEER HAS NOT PHYSICALLY LOCATED THE UNDERGROUND UTILITIES.

811 Know what's below. Call before you dig.

ELEMENTS
Engineering, LLC
6213 Behner Way
Indianapolis, IN 46250
(317) 490-7054

THE ANDERSON CORPORATION
301 S. UNION STREET
WESTFIELD, IN 46074

NORTHWALK RESIDENTIAL COMMUNITY
740 N. UNION STREET
WESTFIELD, IN 46074

LANDSCAPE PLAN

JENNIFER L. REED — LANDSCAPE ARCHITECT — STATE OF INDIANA — APPROVAL PENDING — NOT FOR CONSTRUCTION

DATE:

DWN BY:	CC
CHKD. BY:	JR
SCALE:	AS NOTED
DATE:	5/29/2014

PROJECT NUMBER
13-76-001

DESIGN PHASE
PLAN REVIEW

PLAN NUMBER
LP101

LANDSCAPE NOTES

1. THE CONTRACTOR SHALL LOCATE AND VERIFY THE EXISTENCE OF ALL UTILITIES PRIOR TO STARTING WORK.
2. THE CONTRACTOR SHALL SUPPLY ALL PLANT MATERIALS IN QUALITY AND QUANTITIES SUFFICIENT TO COMPLETE THE PLANTING AS SHOWN ON DRAWINGS.
3. ALL MATERIAL SHALL CONFORM TO THE GUIDELINES ESTABLISHED BY THE CURRENT "AMERICAN STANDARD FOR NURSERY STOCK. AS PUBLISHED BY THE AMERICAN ASSOCIATION OF NURSERYMEN.
4. NO PLANT SHALL BE PUT INTO THE GROUND BEFORE ROUGH GRADING HAS BEEN FINISHED AND APPROVED.
5. ALL PLANTS SHALL BE PLANTED SO THAT THE ROOT CROWN IS PLANTED AT GRADE PRIOR TO DIGGING OR AS IN THE CONTAINER.
6. ALL PLANTS SHALL BE BALLED AND WRAPPED OR CONTAINER GROWN AS SPECIFIED. NO CONTAINER GROWN STOCK WILL BE ACCEPTED IF IT IS ROOT BOUND. ALL ROOT WRAPPING MATERIAL MADE OF SYNTHETICS OR PLASTICS SHALL BE REMOVED AT THE TIME OF PLANTING. ALL TWINE OR ROPE SHALL BE REMOVED FROM AROUND CROWN OF TRUNK TO PREVENT GIRDELING OF TREE.
7. WITH CONTAINER GROWN STOCK, THE CONTAINER SHALL BE REMOVED AND THE CONTAINER BALL SHALL BE CUT THROUGH THE SURFACE IN TWO VERTICAL LOCATIONS.
8. THE DAY PRIOR TO PLANTING, THE LOCATIONS OF ALL TREES AND SHRUBS SHALL BE STAKED FOR APPROVAL BY THE LANDSCAPE ARCHITECT OR OWNER'S REPRESENTATIVE.
9. THE LANDSCAPE CONTRACTOR SHALL REFER TO THE CONTRACT SPECIFICATIONS FOR ADDITIONAL REQUIREMENTS.
10. THE LANDSCAPE CONTRACTOR SHALL GUARANTEE NEW PLANT MATERIAL THROUGH ONE CALENDAR YEAR FROM THE TIME OF PROVISIONAL ACCEPTANCE.
11. IF THERE IS A DISCREPANCY BETWEEN THE PLANS AND THE PLANT LIST, THE PLANS SHALL TAKE PRECEDENCE.
12. CONTRACTOR SHALL REPAIR ANY DAMAGE TO PROPERTY FROM PLANTING OPERATIONS AT NO COST TO THE OWNER.
13. STAKES AND GUY WIRES SHALL BE REMOVED AFTER ONE YEAR.
14. ALL EXISTING LANDSCAPING SHALL BE MAINTAINED DURING CONSTRUCTION. ANY MATERIAL DEEMED DEAD OR UNSATIFACTORY BY LANDSCAPE ARCHITECT WILL BE REPLACED EQUIVALENT IN SIZE AND SHAPE AT NO COST TO THE OWNER.
15. ALL EXISTING LANDSCAPING SHALL BE PRESERVED; NO SOIL STOCKPILING OR STRIPPING. NO EQUIPMENT OR MATERIAL STORAGE SHALL BE ALLOWED. AN ORANGE CONSTRUCTION FENCE SHALL BE CONSTRUCTED TO A DISTANCE OF NO LESS THAN 10 FEET OUTSIDE THE DRIP LINE OF THE EXISTING TREES. CONTACT LANDSCAPE ARCHITECT FOR ADDITIONAL INFORMATION.
16. IRRIGATION OF SITE LANDSCAPING TO BE DIRECTED BY OWNER.
17. ALL PLANTING BEDS SHALL HAVE A SPADE EDGE UNLESS OTHEWISE NOTED.
18. ALL TREES NOT IN PLANTING BEDS SHALL HAVE 4' MULCH RING WITH WITH SAUCER AT FLARE OF TRUNK UNLESS OTHERWISE NOTED.

SEED TOLERANCE DATA

	SOIL CONDITION			SHADE TOLERANCE	CLOSE MOWING TO 2-3 1/2 INCHES	TRAMPING TOLERANCE	FERTILITY NEEDS	WINTER HARDINESS	FLOODING TOLERANCE (DAYS)	MATURE HEIGHT (INCHES)	EMERGENCE TIME (DAYS)	SOIL TOLERANCE		
	WET	NORM	DRY									GEN.	SOIL	SPRAY
CREEPING RED FESCUE FESTUCA RUBRA	2	1	2	1	1	1	MED.	1	20-25	12-18	7-21			S
KENTUCKY BLUEGRASS POA PROTINSIS	2	1	2	1	1	1	MED.	1	20-35	12-18	10-20			MT
TALL FESCUE FESTUCA L. ARUNDINACEA	2	1	1	1	1	1	LOW	1	24-35	24-36	5-14		T	
PERENNIAL RYEGRASS LOLLUM PERENNE	2	1	2	x	1	2	MED. HIGH	2	15-20	12-18	5-10		MT	
CROWNVETCH CORONILLA VARLA	x	1	1	2	x	x	LOW	1	5-10	24	14-21	T		
RED CLOVER TRIFOLIUM PROTENSE	x	1	x	2	x	x	MED.	1	7-10	18	5-10	S	S	

RANKING:
1 = GOOD
2 = MEDIUM
x = NOT TOLERANT

SALT TOLERANCE (TO BOTH SOIL SALTS & SPRAY)
T = TOLERANCE
MT = MEDIUM TOLERANCE
S = SLIGHT TOLERANCE

SEEDING APPLICATION DATA

SPECIES	SEEDING RATE		SUITABLE pH	SITE SUITABILITY *		
	LBS/ACRE	LBS/1000 SQ. FT.		DROUGHTY	WELL DRAINED	WET
LEVEL AND SLOPING, OPEN AREAS						
1. TALL FESCUE	35	.8	5.5-8.3	2	1	2
2. TALL FESCUE	25	.6	5.5-8.3		1	
RED CLOVER	5	.12				
3. KENTUCKY BLUEGRASS	15	.4	5.8-7.5	2	1	
CREEPING RED FESCUE	15	.4				
STEEP BANKS AND CUTS						
4. TALL FESCUE	15	.4	5.8-7.5	2	1	2
KENTUCKY BLUEGRASS	25	.6				
5. TALL FESCUE	35	.8	5.5-8.3	2	1	
EMERALD CROWNVETCH**	10	.25				
LAWNS AND HIGH MAINTENANCE AREAS						
6. KENTUCKY BLUEGRASS	40	.9	5.8-7.5	2	1	
CREEPING RED FESCUE	40	.9				
7. PERENNIAL RYEGRASS (TURF TYPE)	170	4.0	5.0-7.5		1	
8. TALL FESCUE	170	4.0	5.5-8.3	2	1	2

* 1 - PREFERRED 2 - WILL TOLERATE ** INOCULATE WITH SPECIFIC INOCULANT.

SEEDBED PREPARATION:

1. APPLY LIME TO RAISE THE pH TO THE LEVEL NEEDED FOR SPECIES BEING SEEDED. APPLY 23 POUNDS OF 12-12-12 ANALYSIS FERTILIZER (OR EQUIVALENT) PER 1000 SQ. FT. (APPROXMATELY 1000 POUNDS PER ACRE) OR FERTILIZE ACCORDING TO TEST. APPLICATION OF 150 LBS. OF AMMONIUM NITRATE ON AREAS LOW IN ORGANIC MATTER AND FERTILITY WILL GREATLY ENHANCE VEGETATIVE GROWTH.
2. WORK THE FERTILIZER AND LIME INTO THE SOIL TO A DEPTH OF 2-3 INCHES WITH A HARROW, DISK OR RAKE OPERATED ACROSS THE SLOPE AS MUCH AS POSSIBLE.

SEEDING:

1. SELECT A SEED MIXTURE BASED ON PROJECTED USE OF THE AREA (SEE PERMANENT SEED MIXTURE CHART), WHILE CONSIDERING BEST SEEDING DATES. IF PERMANENT SEEDING IS NOT PERMITTED, USE TEMPORARY SEEDING UNTIL PERMANENT SEEDING CAN BE APPLIED. IF TOLERANCES ARE A PROBLEM, SUCH AS SALT TOLERANCE OF SEEDINGS ADJACENT TO STREETS AND HIGHWAYS, SEE SEED TOLERANCE CHART.

EC04 SEEDING DETAIL
NOT TO SCALE

TEMPORARY SEEDINGS

TYPE OF SEED	1000 SQ. FT.	ACRE	REMARKS
WHEAT OR RYE	3.5 LBS.	2 BU.	COVER SEED 1" TO 1 1/2" DEEP
SPRING OATS	2.3 LBS.	3 BU.	COVER SEED 1" DEEP
ANNUAL RYEGRASS	1 LB.	40 LB.	COVER SEED 1/4" DEEP

* NOT NECESSARY WHERE MULCH IS APPLIED.

TEMPORARY SEEDING DATES

	JAN	FEB	MAR	APR	MAY	JUN	JUL	AUG	SEP	OCT	NOV	DEC
WHEAT OR RYE												
OATS												
ANNUAL RYEGRASS												

PERMANENT SEEDING DATES

	JAN	FEB	MAR	APR	MAY	JUN	JUL	AUG	SEP	OCT	NOV	DEC
NON-IRRIGATED*												
IRRIGATED												
DORMANT SEEDING **												

IRRIGATION NEEDED DURING THIS PERIOD. TO CONTROL EROSION AT TIMES OTHER THAN IN THE SHADED AREAS, USE MULCH.

* LATE SUMMER SEEDING DATES MAY BE EXTENDED 5 DAYS IF MULCH IS APPLIED.

** INCREASE SEEDING APPLICATION BY 50%.

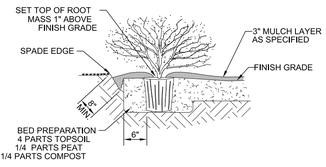

SHRUB AND SMALL TREE PLANTING DETAIL
NOT TO SCALE

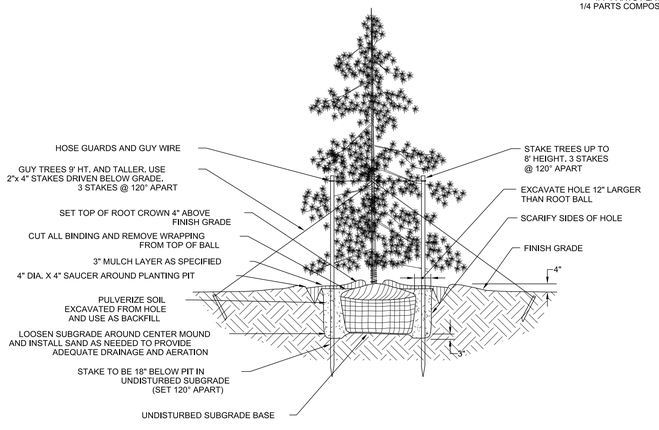

EVERGREEN TREE PLANTING DETAIL
NOT TO SCALE

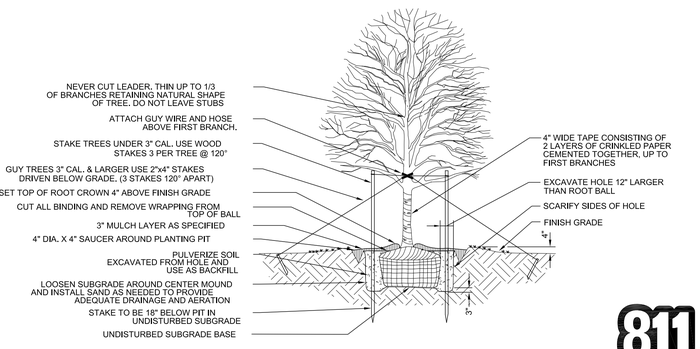

SHADE TREE PLANTING DETAIL
NOT TO SCALE

Know what's below. Call before you dig.

ELEMENTS
Engineering, LLC
6213 Behner Way
Indianapolis, IN 46250
(317) 490-7054

THE ANDERSON CORPORATION
301 S. UNION STREET
WESTFIELD, IN 46074

NORTHWALK RESIDENTIAL COMMUNITY
740 N. UNION STREET
WESTFIELD, IN 46074

LANDSCAPE DETAILS

JENNIFER L. ROBERTS
REGISTERED LANDSCAPE ARCHITECT
LA20900109
STATE OF INDIANA

APPROVAL PENDING
NOT FOR CONSTRUCTION

DATE:

DWN BY:	CC
CHKD. BY:	JR
SCALE:	AS NOTED
DATE:	4/4/2014

PROJECT NUMBER
13-76-001

DESIGN PHASE
PLAN REVIEW

PLAN NUMBER
LP102

COMMON AREA 'B'

1 Viburnum
Favreri

5 sea green
Junipers

4 redbuds

8 HOSTA

4'

10 x 10
TYP.

FIREPIT

3'

5'

COMMON AREA 'C'

LEGEND

MULCH PATH

10 x 10 GARDEN PLOT
OUTLINE W/ 6x6
LEVEL
by HOA

FIRE PIT