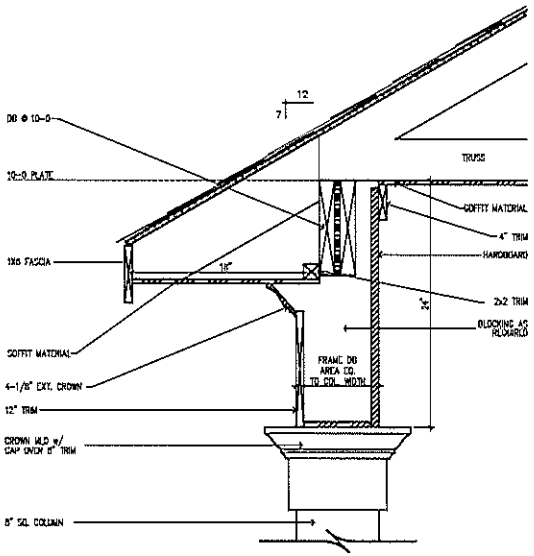

FRONT PORCH CORNICE DETAIL

SCALE: 1" = 1'-0"

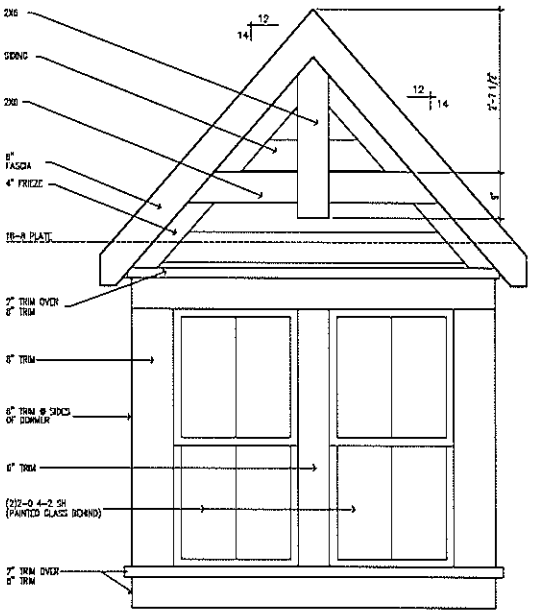

DORMER DETAIL

SCALE: 1/2" = 1'-0"

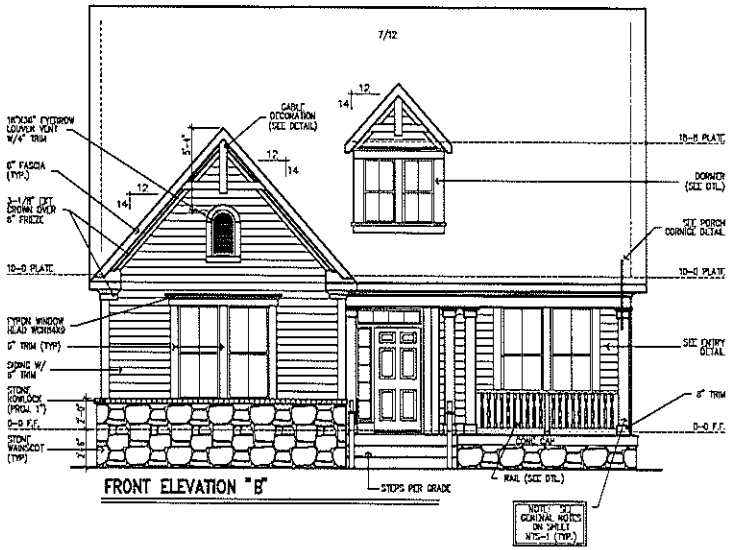

FRONT ELEVATION "B"

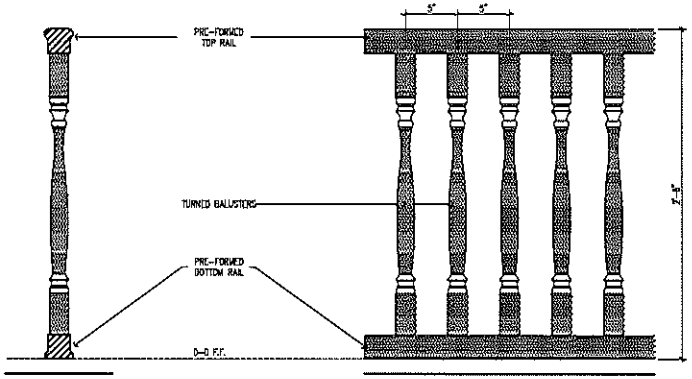

PORCH RAIL DETAIL

SCALE: 1" = 1'-0"

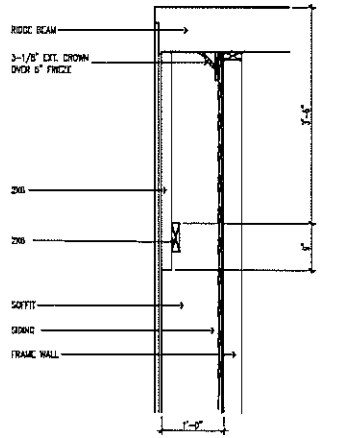

GABLE END DETAIL

1/2" = 1'-0"

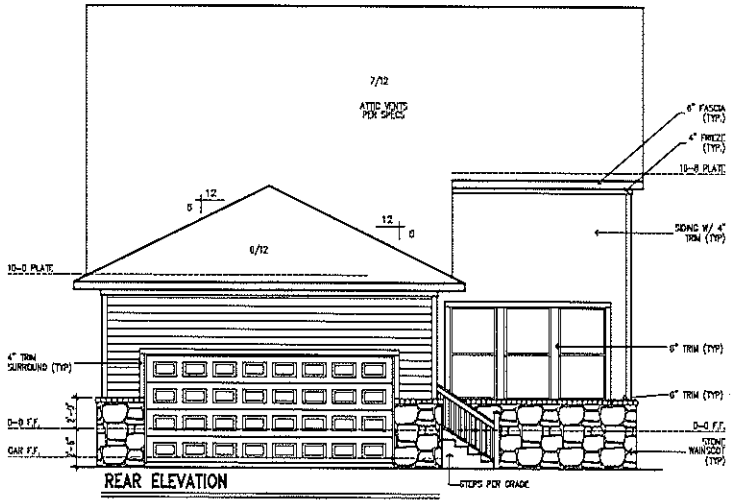

REAR ELEVATION

© Weekley Homes L.P. 2011
The measurements, dimensions, and other specifications, shown on this document, are guidelines for construction use only. The actual specifications of the finished structure may vary. This document may not be relied on as a representation of what the completed structure will look like.

David Weekley Homes

CN/JDA/JP/WC/JR 1/8" = 1'-0"

Date: 10/9/14 Rev.: 01/15/15 JR

Proj. No.: Lot:

Job No.: Blk.:

Sect:

NORTH

4528-B

ELV-1

INFINITY

INDIANAPOLIS

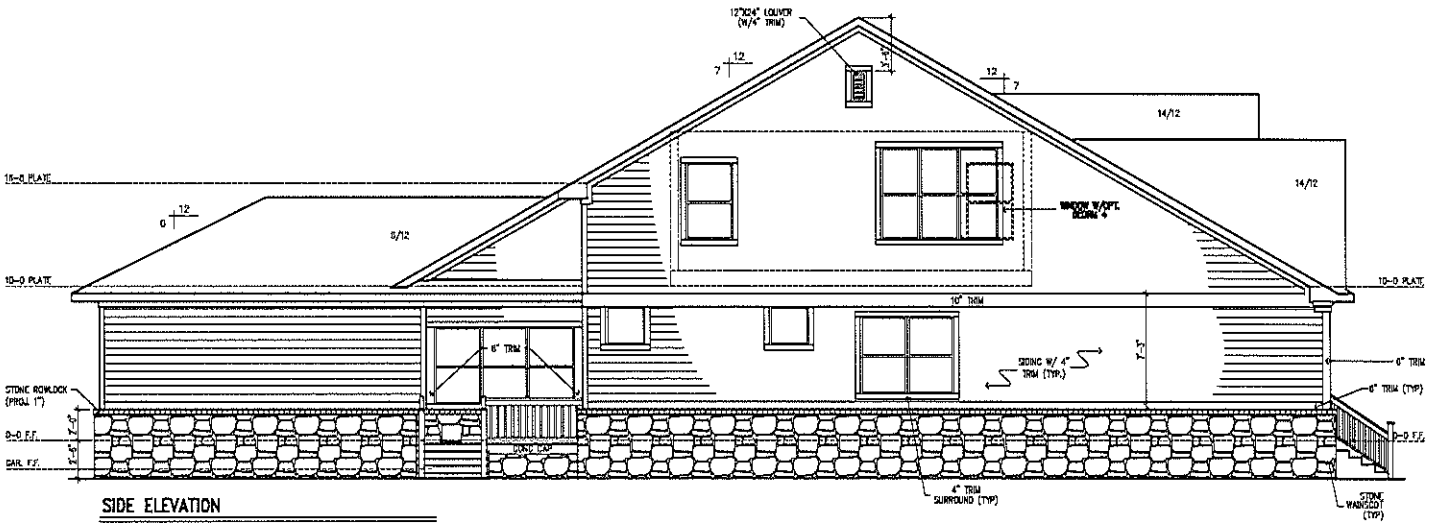

SIDE ELEVATION

TYP. PLATE HEIGHTS	
NOMINAL	ACTUAL
8-0 PLATE	7-11 5/8
9-0 PLATE	8-11 5/8
10-0 PLATE	9-11 5/8
11-0 PLATE	10-11 5/8
2ND FLOOR PLATE HEIGHTS (W/14" FLOOR SYSTEM)	
19-0 PLATE	19-11 7/8
20-0 PLATE	19-11 7/8
21-0 PLATE	20-11 7/8
2ND FLOOR PLATE HEIGHTS (W/14" FLOOR SYSTEM)	
19-0 PLATE	19-1 7/8
20-0 PLATE	20-1 7/8
21-0 PLATE	21-1 7/8

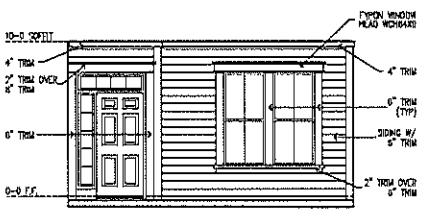

ENTRY DETAIL

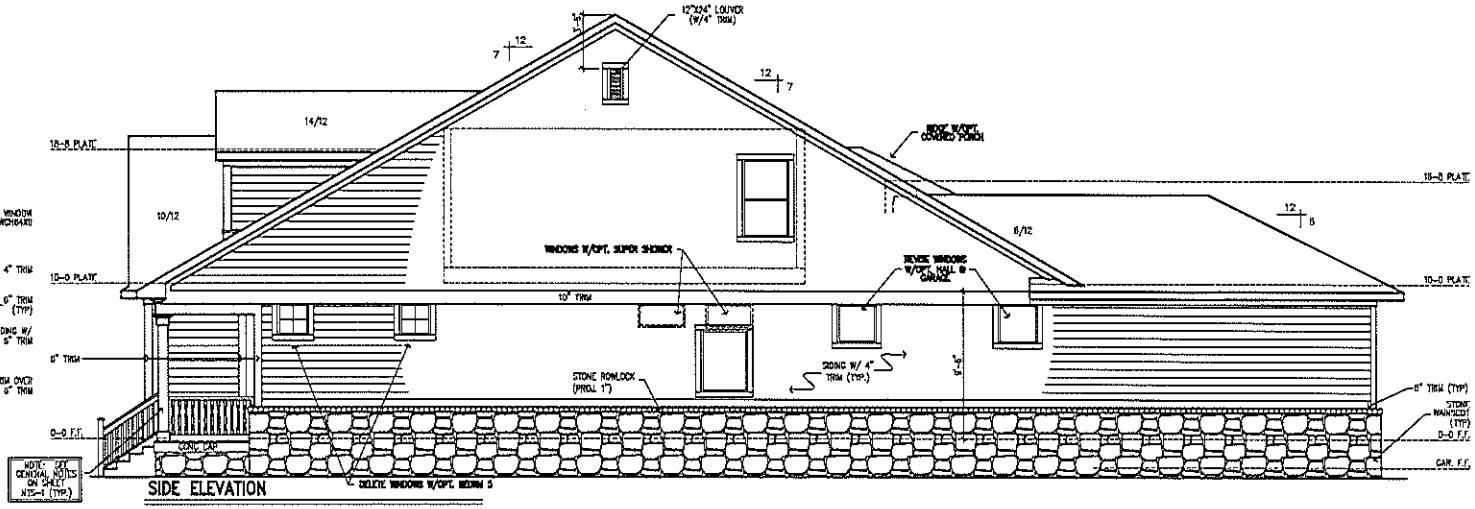

SIDE ELEVATION

© Weekly Homes L.P. 2011
The measurements, dimensions, and other specifications, shown on this document, are guidelines for construction use only. The actual specifications of the finished structure may vary. This document may not be relied on as a representation of what the completed structure will look like.

David Weekley Homes

CN/JDA/JP/WC/JR 1/8" = 1'-0"

Date: 10/9/14 Rev.: 01/15/15 JR

Proj. No.:

Job No.:

Lot:

Blk:

Sect:

NORTH

4528-B

ELV-2

INFINITY

INDIANAPOLIS

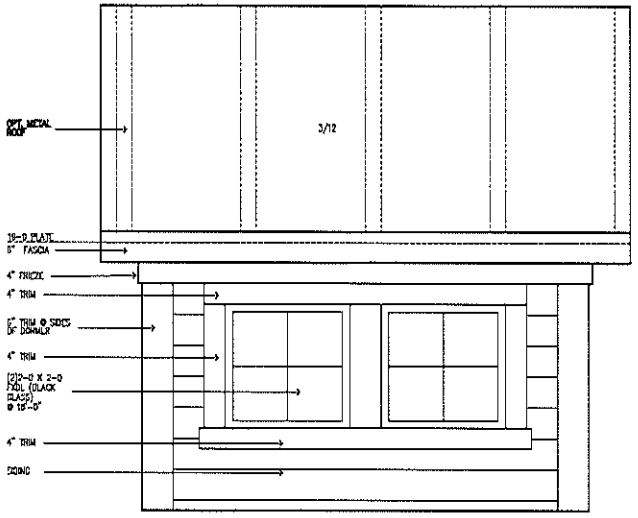

DORMER DETAIL

SCALE: 1/2" = 1'-0"

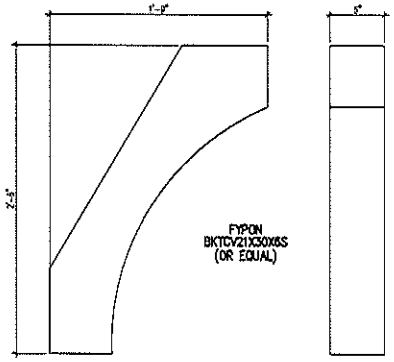

BRACKET DETAIL "A"

SCALE: 1" = 1'-0"

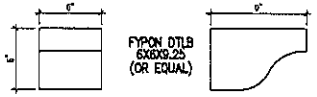

BRACKET DETAIL " B"

SCALE: 1" = 1'-0"

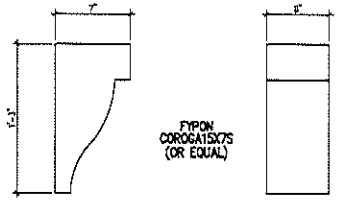

BRACKET DETAIL "C"

SCALE: 1" = 1'-0"

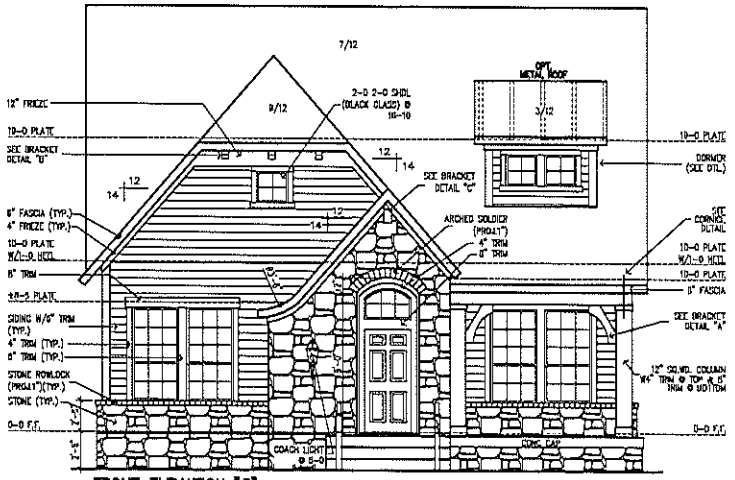

FRONT ELEVATION "D"

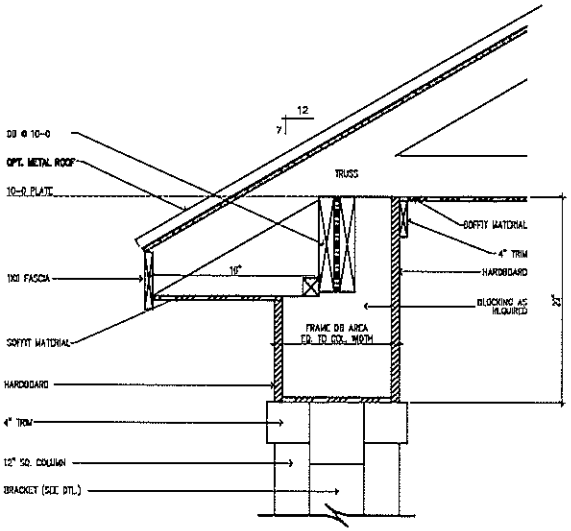

FRONT PORCH CORNICE DETAIL

SCALE: 1" = 1'-0"

TYP. PLATE HEIGHTS	
NOMINAL	ACTUAL
8'-0 PLATE	7'-11 5/8
9'-0 PLATE	8'-11 5/8
10'-0 PLATE	9'-11 5/8
11'-0 PLATE	10'-11 5/8
2ND FLOOR PLATE HEIGHTS (W/ 12" FLOOR SYSTEM)	
19'-0 PLATE	18'-11 7/8
20'-0 PLATE	19'-11 7/8
21'-0 PLATE	20'-11 7/8
2ND FLOOR PLATE HEIGHTS (W/ 14" FLOOR SYSTEM)	
19'-0 PLATE	18'-1 7/8
20'-0 PLATE	20'-1 7/8
21'-0 PLATE	21'-1 7/8

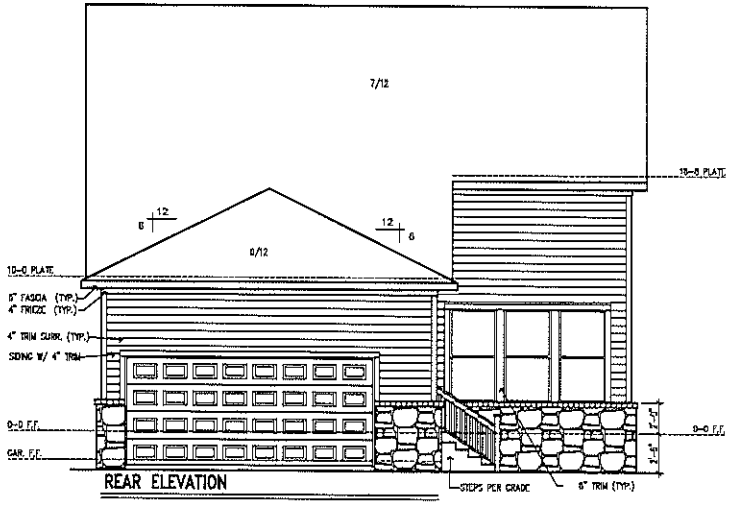

REAR ELEVATION

© Weekley Homes LP, 2014
The measurements, dimensions, and other specifications, shown on this document, are guidelines for construction use only. The actual specifications of the finished structure may vary. This document may not be relied upon as a representation of what the completed structure will look like.

David Weekley Homes | Scale: 1/8" = 1'-0" | GS/XS/EM/JR | Rev: 01/15/15 JR | Date: 12/16/14

Lot: | Blk: | Sect:

Proj. No.: | Job No.:

NORTH
4528-D
ELV-1
INFINITY
INDIANAPOLIS

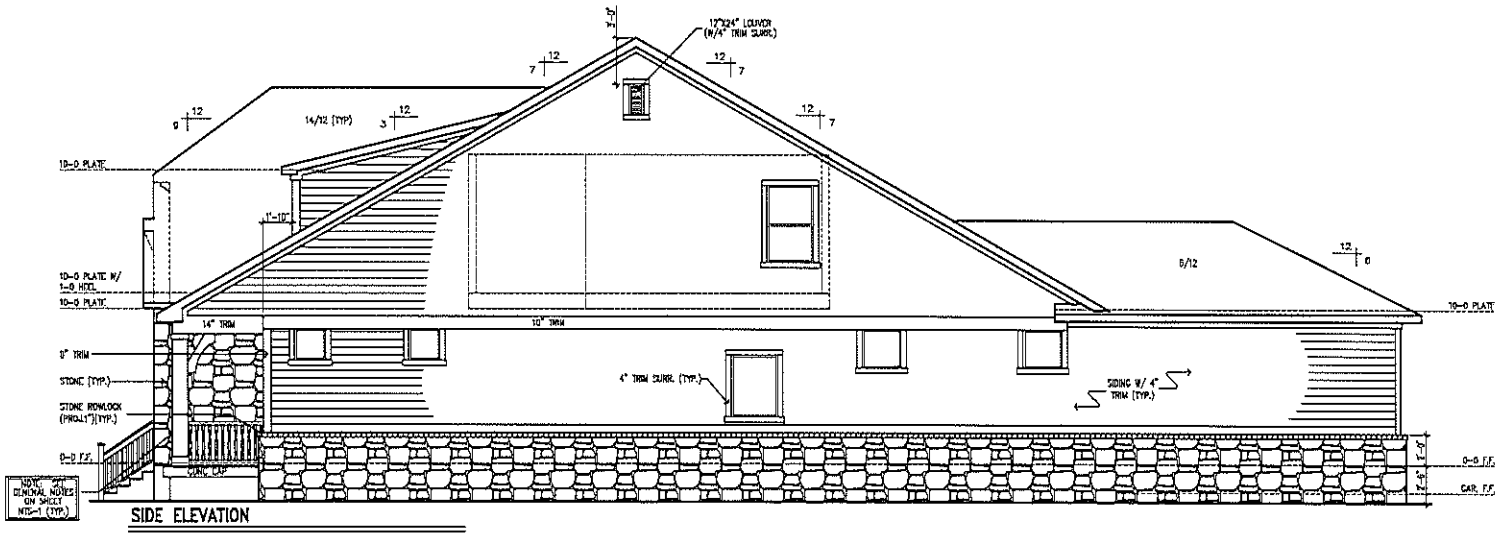

SIDE ELEVATION

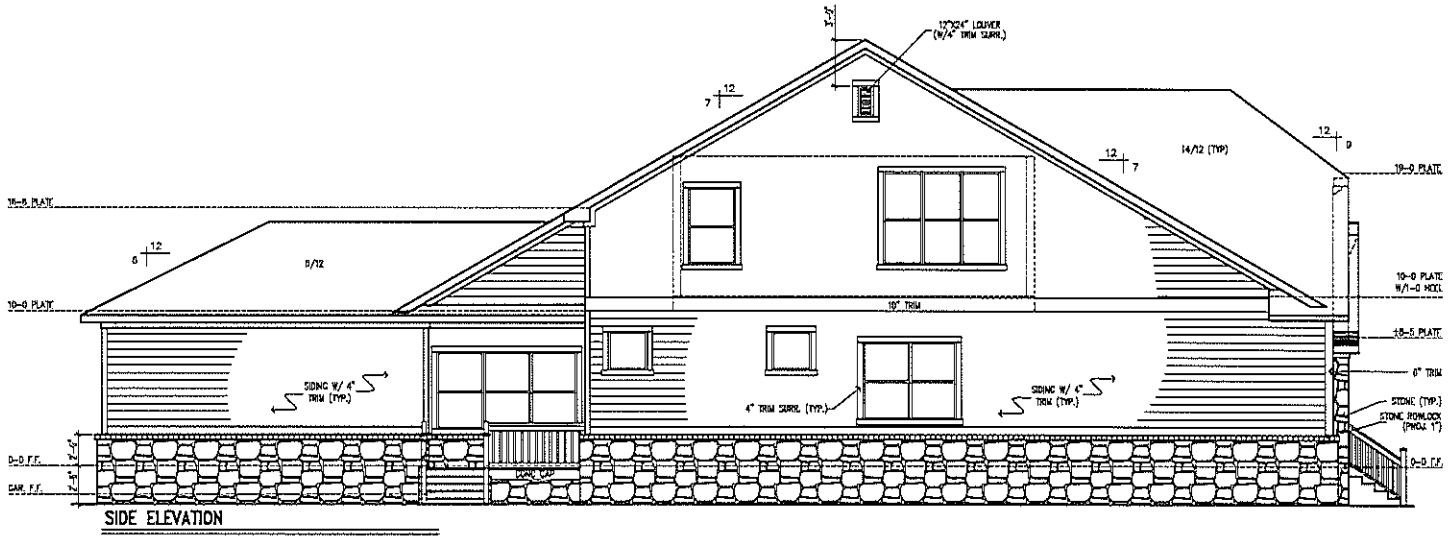

SIDE ELEVATION

© Weekley Homes L.P. 2014
The measurements, dimensions, and other specifications, shown on this document, are guidelines for construction use only. The actual specifications of the finished structure may vary. This document may not be relied on as a representation of what the completed structure will look like.

David Weekley Homes

GS/XS/EM/JR | Scale: 1/8" = 1'-0"

Date: 12/16/14 | Rev.: 01/15/15 JR

Proj. No.: | Lot:

Job No.: | Blk:

Sect:

NORTH

4528-D

ELV-2

INFINITY

INDIANAPOLIS

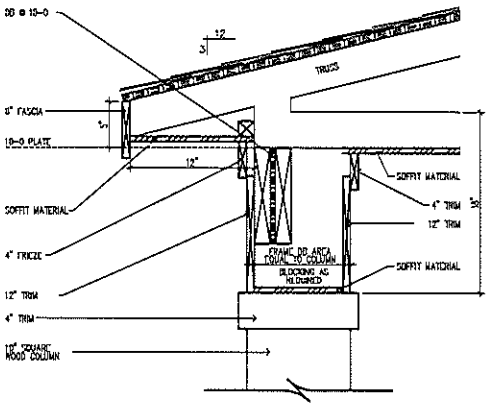

FRONT PORCH CORNICE DETAIL

SCALE: 1" = 1'-0"

TYP. PLATE HEIGHTS	
NOMINAL	ACTUAL
8-0 PLATE	7-11 5/8
9-0 PLATE	8-11 5/8
10-0 PLATE	9-11 5/8
11-0 PLATE	10-11 5/8
2ND FLOOR PLATE HEIGHTS (W/ 14" FLOOR SYSTEM)	
19-0 PLATE	18-11 7/8
20-0 PLATE	19-11 7/8
21-0 PLATE	20-11 7/8
3RD FLOOR PLATE HEIGHTS (W/ 14" FLOOR SYSTEM)	
19-0 PLATE	19-1 7/8
20-0 PLATE	20-1 7/8
21-0 PLATE	21-1 7/8

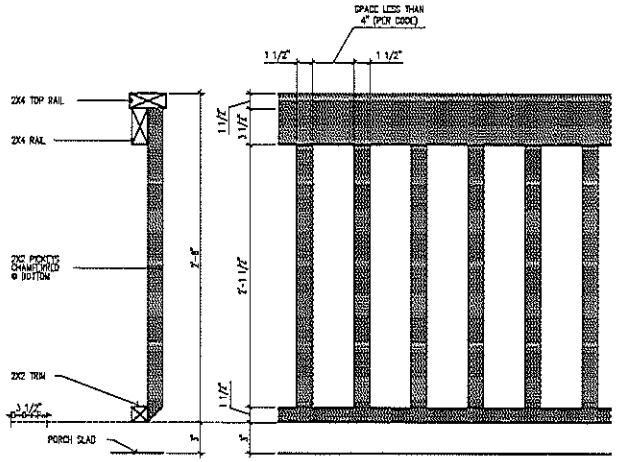

PORCH RAIL DETAIL

SCALE: 1" = 1'-0"

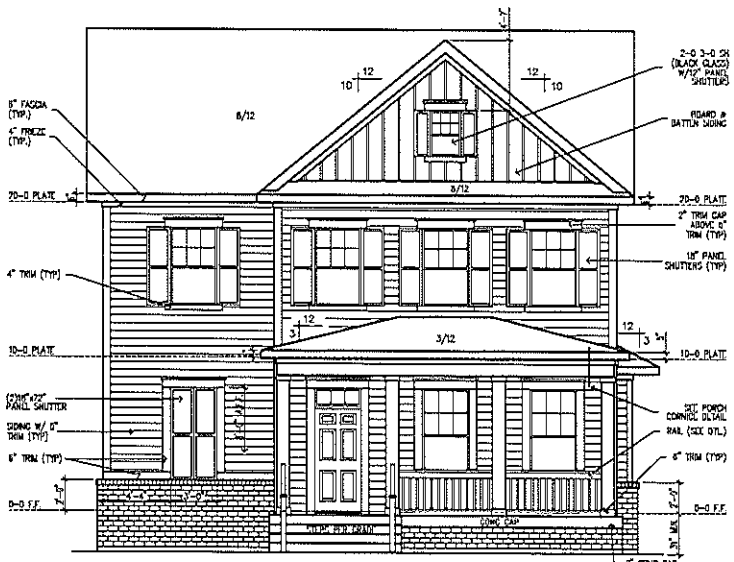

FRONT ELEVATION "A"

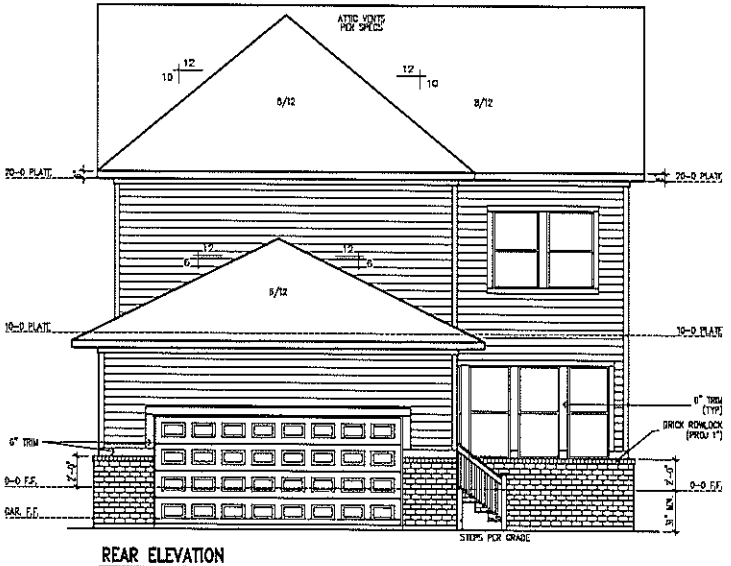

REAR ELEVATION

© Weekley Homes LP, 2012
The measurements, dimensions, and other specifications, shown on this document, are guidelines for construction use only. The actual specifications of the finished structure may vary. This document may not be relied on as a representation of what the completed structure will look like.

David Weekley Homes

CN/RD/JP | Scale: 1/8" = 1'-0"

Date: 8/13/2012 | Rev.: 2/4/15EAM

Proj. No.: | Lot: | Job No.: | Blk: | Sect:

NORTH
4671-A
ELV-1
CLAIRBELLA
INDIANAPOLIS

TYP. PLATE HEIGHTS	
NOMINAL	ACTUAL
8'-0 PLATE	7'-11 5/8
9'-0 PLATE	8'-11 5/8
10'-0 PLATE	9'-11 5/8
11'-0 PLATE	10'-11 5/8
2ND FLOOR PLATE HEIGHTS (W/ 14" FLOOR SYSTEM)	
19'-0 PLATE	18'-11 7/8
20'-0 PLATE	19'-11 7/8
21'-0 PLATE	20'-11 7/8
2ND FLOOR PLATE HEIGHTS (W/ 12" FLOOR SYSTEM)	
19'-0 PLATE	18'-1 7/8
20'-0 PLATE	20'-1 7/8
21'-0 PLATE	21'-1 7/8

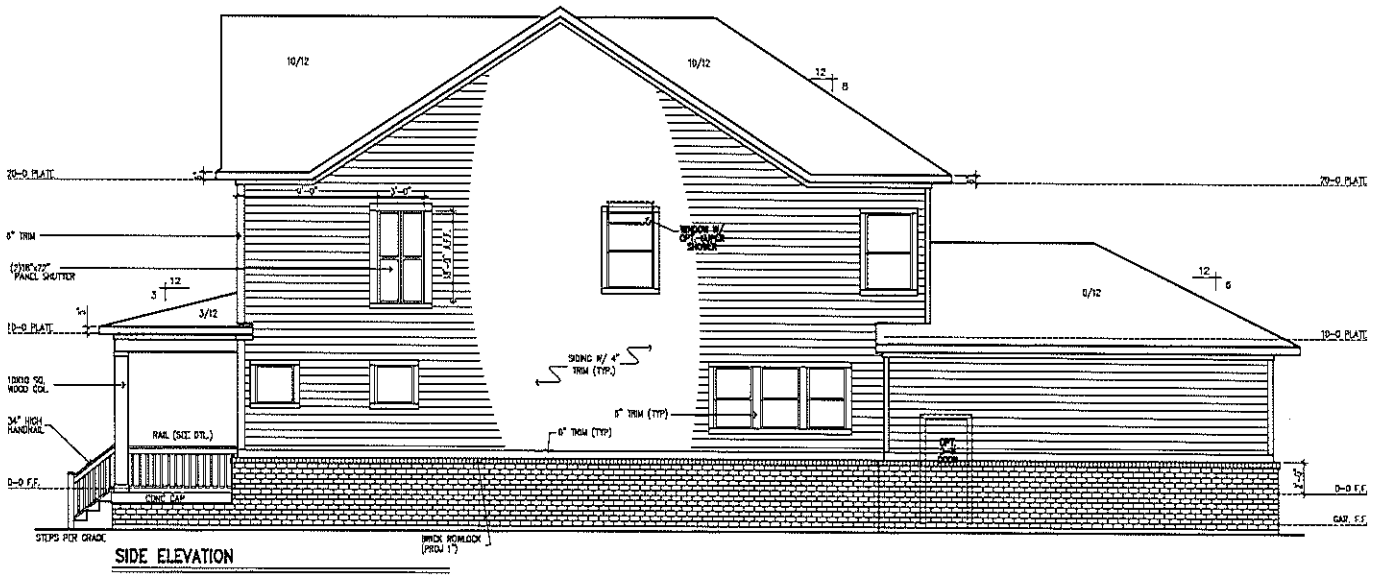

SIDE ELEVATION

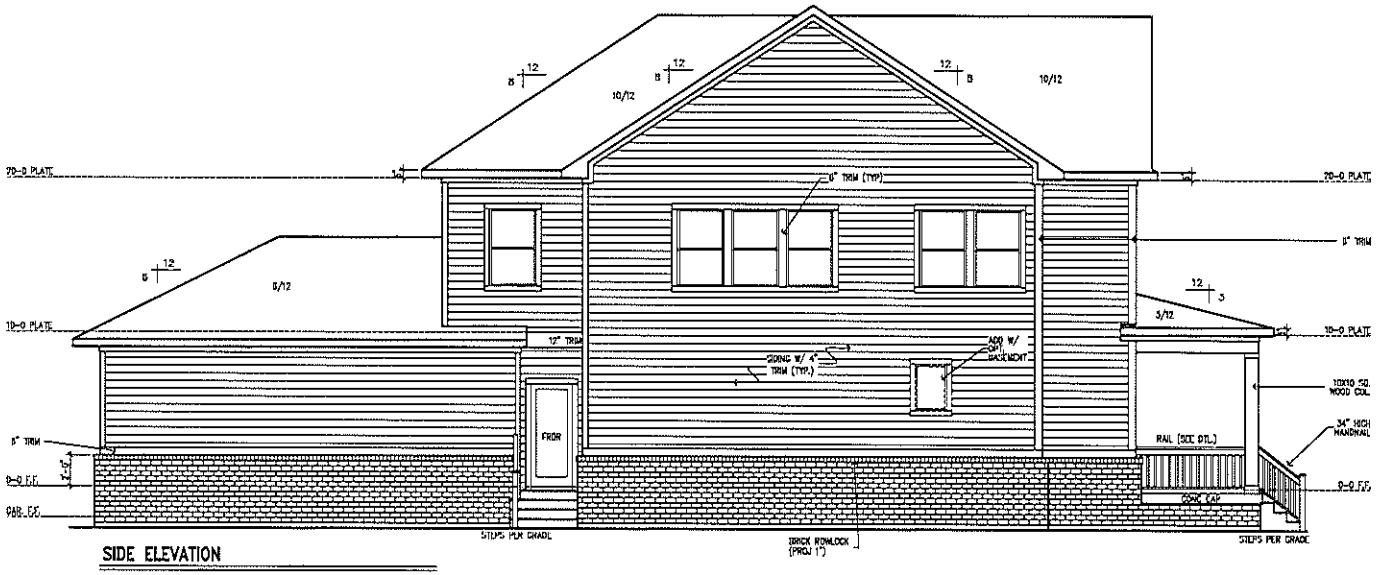

SIDE ELEVATION

© Weekley Homes LP, 2012
The measurements, dimensions, and other specifications, shown on this document, are guidelines for construction use only. The actual specifications of the finished product may vary slightly. This document may not be relied on as a representation of what the completed structure will look like.

David Weekley Homes

CN/RD/JP	Scale: 1/8" = 1'-0"
Date: 8/13/2012	Rev.: 2/4/15EAM

Lot: Blk: Sect:
Proj No.: Job No.:

NORTH
4671-A
ELV-2
CLAIRBELLA
INDIANAPOLIS

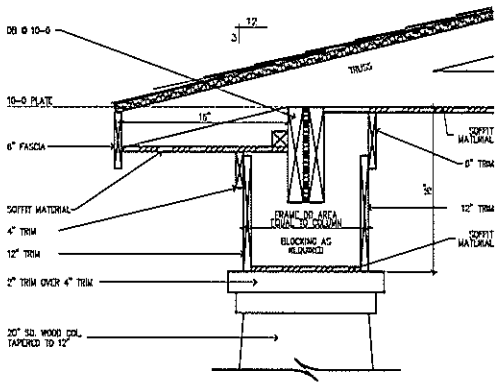

FRONT PORCH CORNICE DETAIL

SCALE: 1" = 1'-0"

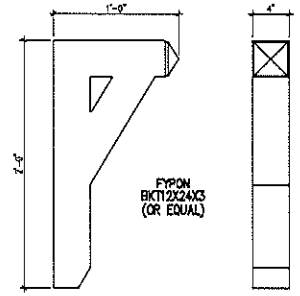

BRACKET DETAIL "A"

SCALE: 1" = 1'-0"

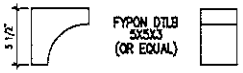

BRACKET DETAIL "B"

SCALE: 1" = 1'-0"

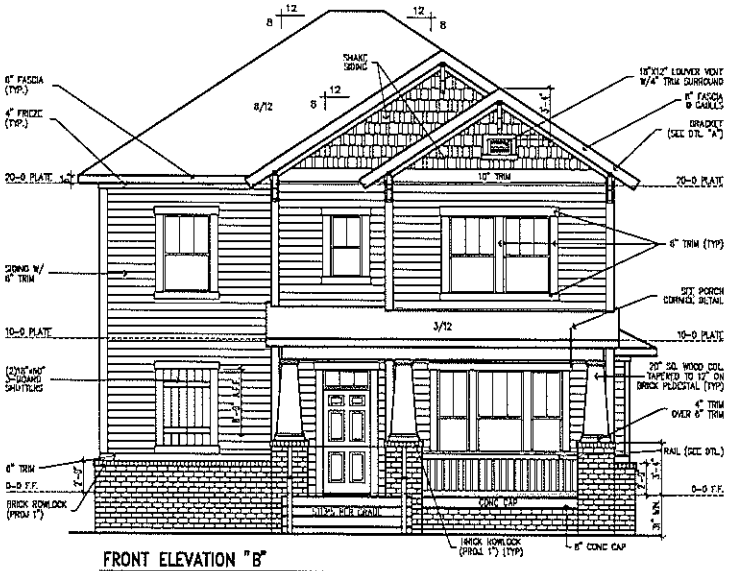

FRONT ELEVATION "B"

TYP. PLATE HEIGHTS	
NOMINAL	ACTUAL
8'-0 PLATE	7'-11 5/8
9'-0 PLATE	8'-11 5/8
10'-0 PLATE	9'-11 5/8
11'-0 PLATE	10'-11 5/8
2ND FLOOR PLATE HEIGHTS (W/ 14" FLOOR SYSTEM)	
19'-0 PLATE	18'-11 7/8
20'-0 PLATE	19'-11 7/8
21'-0 PLATE	20'-11 7/8
2ND FLOOR PLATE HEIGHTS (W/ 16" FLOOR SYSTEM)	
19'-0 PLATE	19'-1 7/8
20'-0 PLATE	20'-1 7/8
21'-0 PLATE	21'-1 7/8

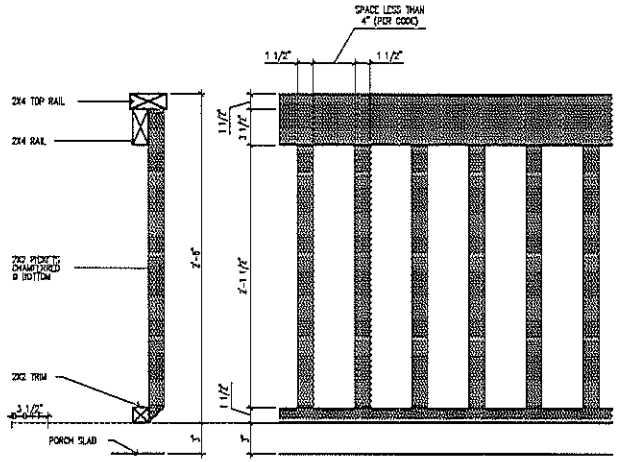

PORCH RAIL DETAIL

SCALE: 1" = 1'-0"

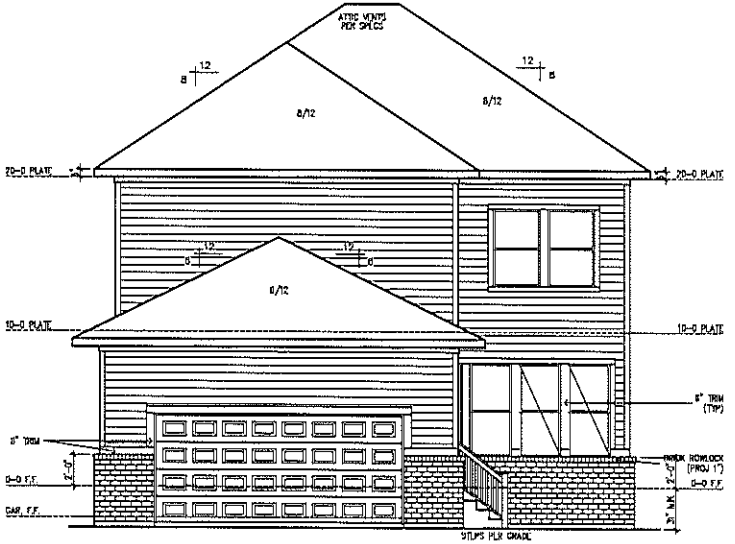

REAR ELEVATION

© Weekley Homes L.P. 2012
The measurements, dimensions, and other specifications, shown on this document, and guidelines for construction use only. The actual specifications of the finished product may vary. This document may not be relied upon as a representation that the completed structure will look like.

David Weekley Homes

CN/RD/JP | Scale: 1/8" = 1'-0"

Date: 8/13/2012 | Rev.: 2/4/15EAM

Lot: | Blk.: | Sect:

Proj. No.: | Job No.:

NORTH

4671-B

ELV-1

CLAIRBELLA

INDIANAPOLIS

TYP. PLATE HEIGHTS	
NOMINAL	ACTUAL
8'-0 PLATE	7'-11 5/8
9'-0 PLATE	8'-11 5/8
10'-0 PLATE	9'-11 5/8
11'-0 PLATE	10'-11 5/8
2ND FLOOR PLATE HEIGHTS (W/ 10" FLOOR SYSTEMS)	
19'-0 PLATE	18'-11 7/8
20'-0 PLATE	19'-11 7/8
21'-0 PLATE	20'-11 7/8
2ND FLOOR PLATE HEIGHTS (W/ 14" FLOOR SYSTEMS)	
19'-0 PLATE	18'-1 7/8
20'-0 PLATE	20'-1 7/8
21'-0 PLATE	21'-1 7/8

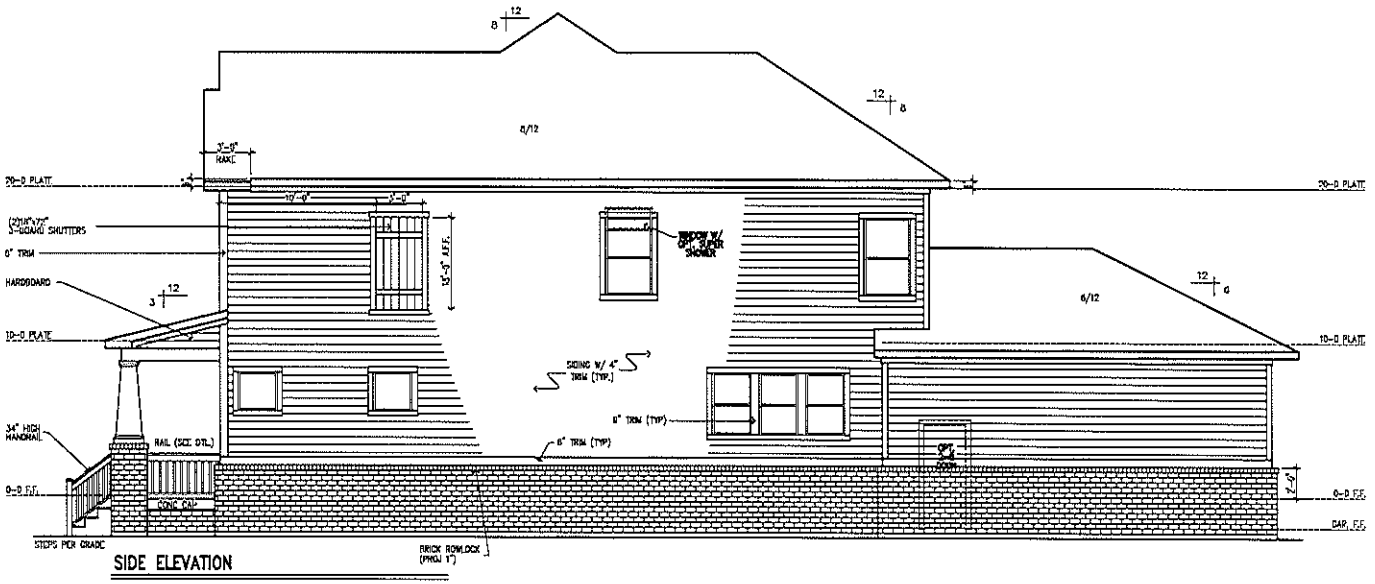

SIDE ELEVATION

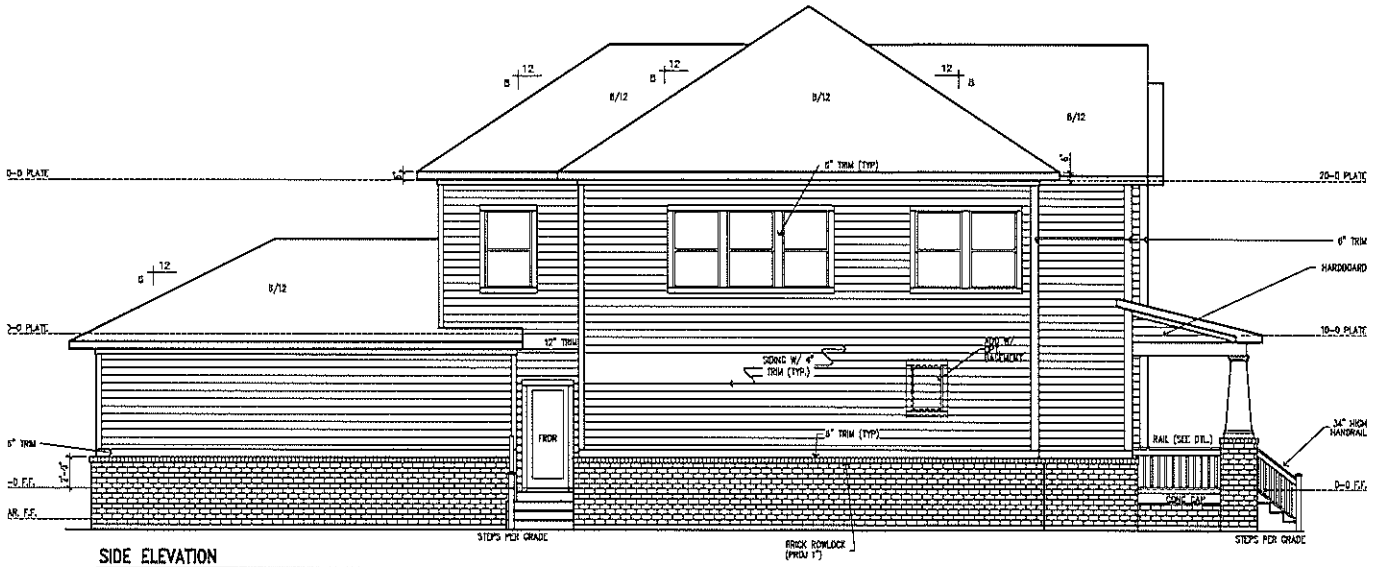

SIDE ELEVATION

© Trinity Homes LP, 2012
The measurements, dimensions, and other specifications, shown on this document, are guidelines for construction only. The actual specifications of the finished product may vary. This document may not be relied on as a representation of what the completed structure will look like.

David Weekley Homes

CN/RD/JP | Scale: 1/8" = 1'-0" | Date: 8/13/2012 | Rev.: 2/4/15EAM

Lot: | Blk: | Sect:

Proj. No.: | Job No.:

NORTH

4671-B

ELV-2

CLAIRBELLA

INDIANAPOLIS

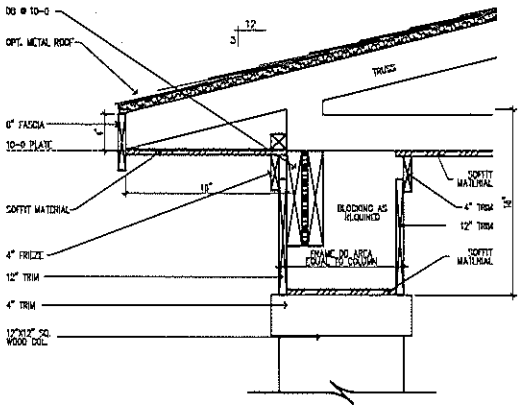

FRONT PORCH CORNICE DETAIL

SCALE: 1" = 1'-0"

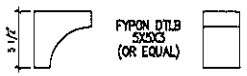

BRACKET DETAIL

SCALE: 1" = 1'-0"

TYP. PLATE HEIGHTS	
NOMINAL	ACTUAL
8-0 PLATE	7-11 5/8
9-0 PLATE	8-11 5/8
10-0 PLATE	9-11 5/8
11-0 PLATE	10-11 5/8
2ND FLOOR PLATE HEIGHTS (W/ 12" FLOOR SYSTEM)	
19-0 PLATE	18-11 7/8
20-0 PLATE	19-11 7/8
21-0 PLATE	20-11 7/8
2ND FLOOR PLATE HEIGHTS (W/ 14" FLOOR SYSTEM)	
19-0 PLATE	19-1 7/8
20-0 PLATE	20-1 7/8
21-0 PLATE	21-1 7/8

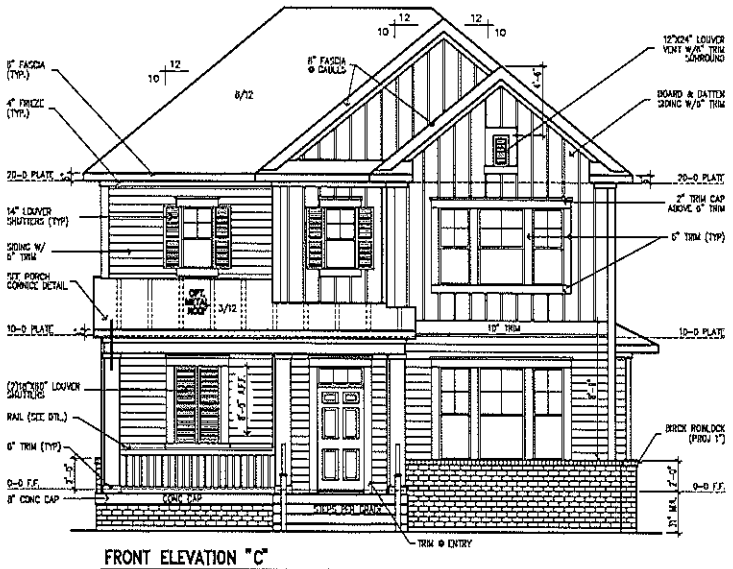

FRONT ELEVATION "C"

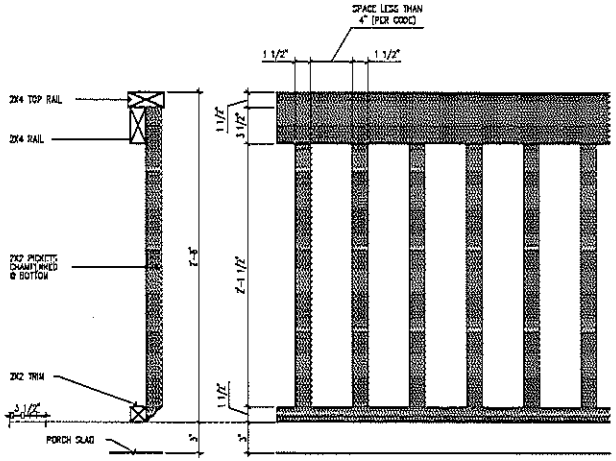

PORCH RAIL DETAIL

SCALE: 1" = 1'-0"

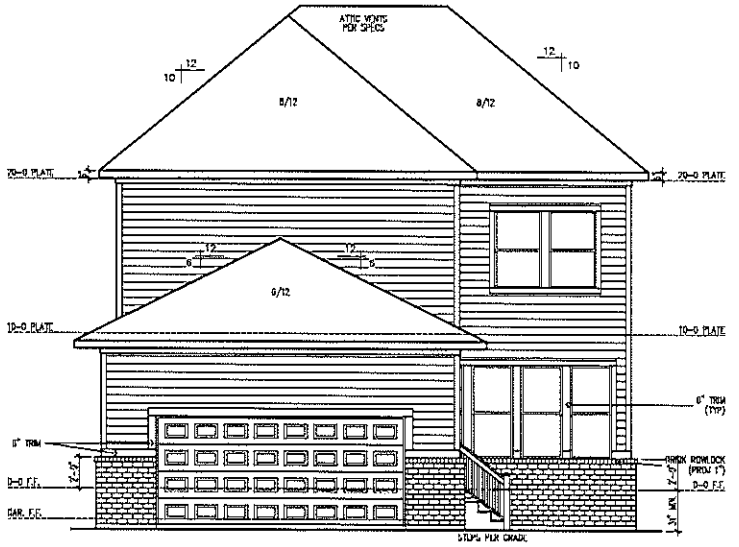

REAR ELEVATION

© Weekley Homes L.P. 2012
The areas, arrangements, dimensions, and other specifications, shown on this document, are guidelines for construction use only. The actual specifications of the finished structure may vary. This document may not be relied on as a representation of what the completed structure will look like.

David Weekley Homes

CN,RD,JP | Scale: 1/8" = 1'-0"

Date: 8/13/2012 | Rev.: 2/4/15EAM

Proj. No.:

Job No.:

Lot:

Blk:

Sect:

NORTH

4671-C

ELV-1

CLAIRBELLA

INDIANAPOLIS

TYP. PLATE HEIGHTS	
NOMINAL	ACTUAL
8'-0 PLATE	7'-11 5/8
9'-0 PLATE	8'-11 5/8
10'-0 PLATE	9'-11 5/8
11'-0 PLATE	10'-11 5/8
2ND FLOOR PLATE HEIGHTS (W/ 14" FLOOR SYSTEM)	
19'-0 PLATE	18'-11 7/8
20'-0 PLATE	19'-11 7/8
21'-0 PLATE	20'-11 7/8
2ND FLOOR PLATE HEIGHTS (W/ 16" FLOOR SYSTEM)	
19'-0 PLATE	19'-1 7/8
20'-0 PLATE	20'-1 7/8
21'-0 PLATE	21'-1 7/8

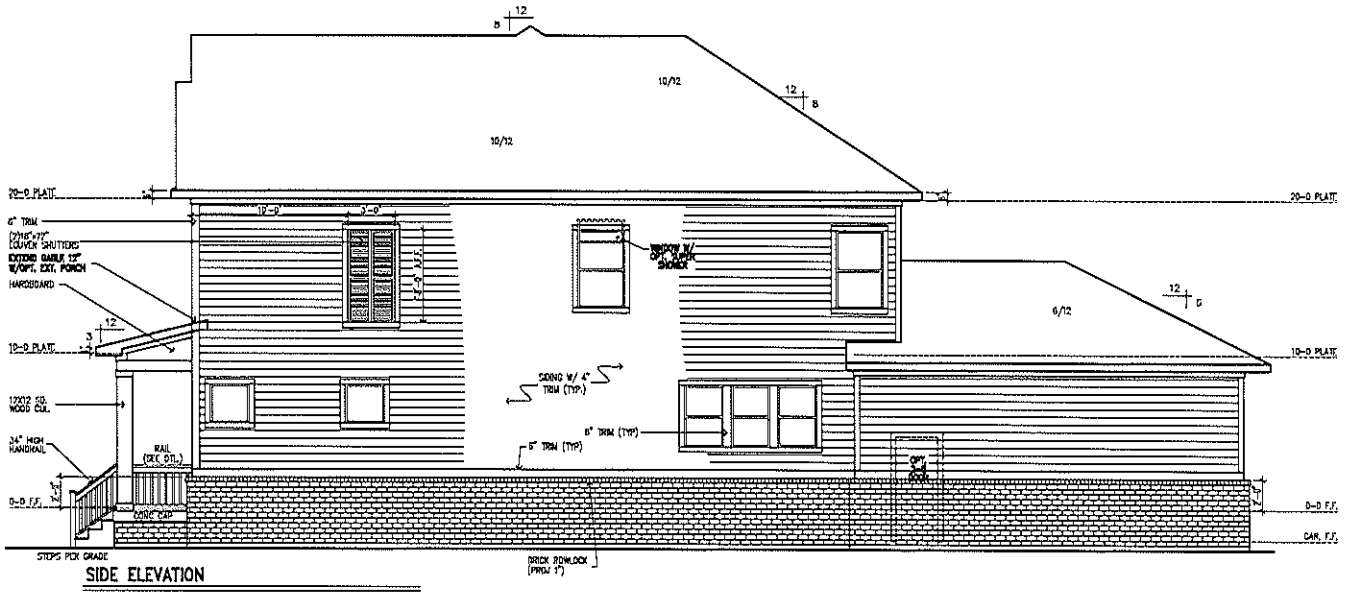

SIDE ELEVATION

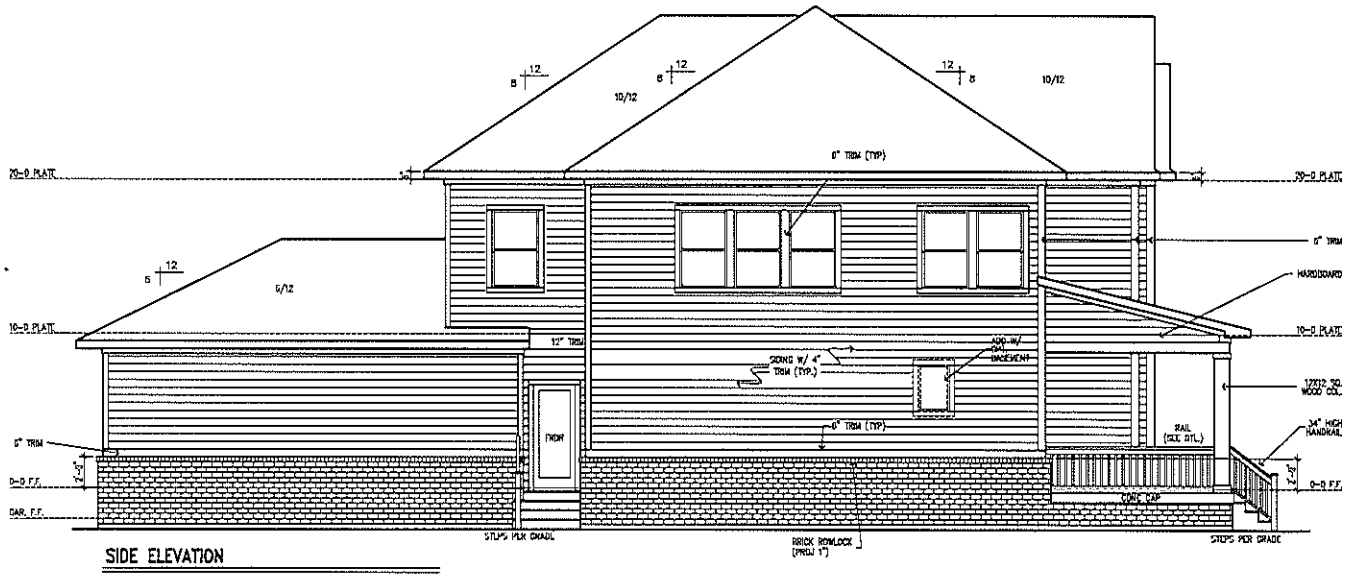

SIDE ELEVATION

© Weekley Homes L.P. 2012
The measurements, dimensions, and other specifications shown on this document, are guidelines for construction use only. The actual specifications of the finished home may vary. This document may not be relied on as a representation of what the completed structure will look like.

David Weekley Homes

CN,RD,JP | Scale: 1/8" = 1'-0"

Date: 8/13/2012 | Rev.: 2/4/15EAM

Lot: | Blk: | Sect:

Proj. No.: | Job No.:

NORTH

4671-C

ELV-2

CLAIRBELLA

INDIANAPOLIS

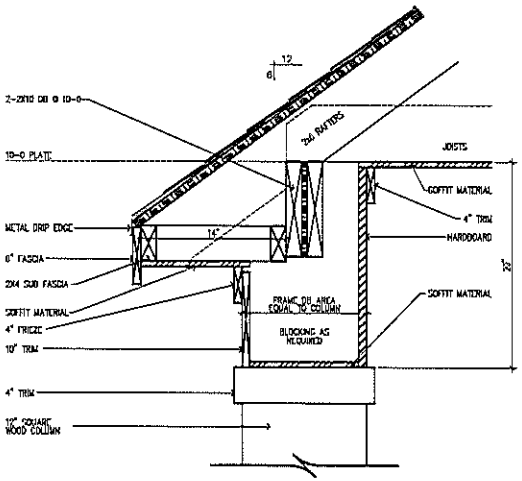

FRONT PORCH CORNICE DETAIL

SCALE: 1" = 1'-0"

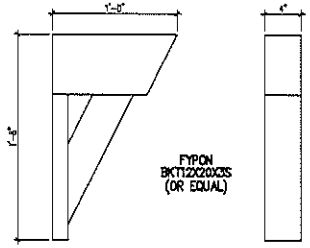

BRACKET DETAIL

SCALE: 1" = 1'-0"

TYP. PLATE HEIGHTS	
NOMINAL	ACTUAL
8'-0 PLATE	7'-11 5/8
9'-0 PLATE	8'-11 5/8
10'-0 PLATE	9'-11 5/8
11'-0 PLATE	10'-11 5/8
2ND FLOOR PLATE HEIGHTS (W/ 12" FLOOR SYSTEM)	
19'-0 PLATE	18'-11 7/8
20'-0 PLATE	19'-11 7/8
21'-0 PLATE	20'-11 7/8
2ND FLOOR PLATE HEIGHTS (W/ 14" FLOOR SYSTEM)	
19'-0 PLATE	18'-1 7/8
20'-0 PLATE	20'-1 7/8
21'-0 PLATE	21'-1 7/8

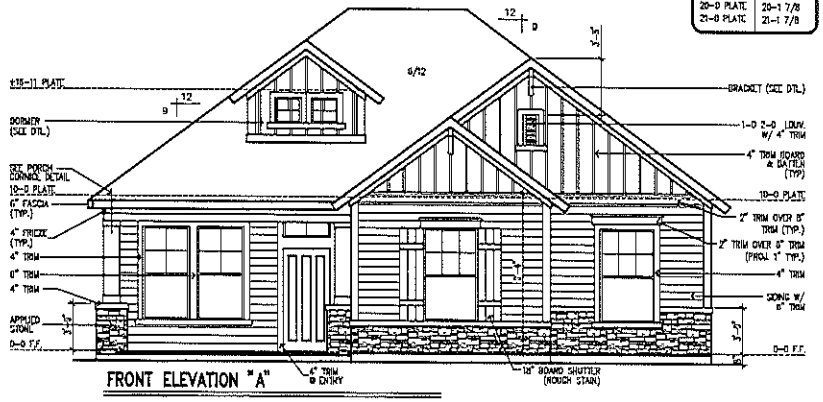

FRONT ELEVATION "A"

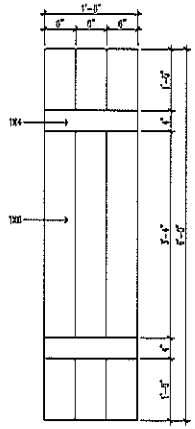

SHUTTER DETAIL

SCALE: 1/2" = 1'-0"

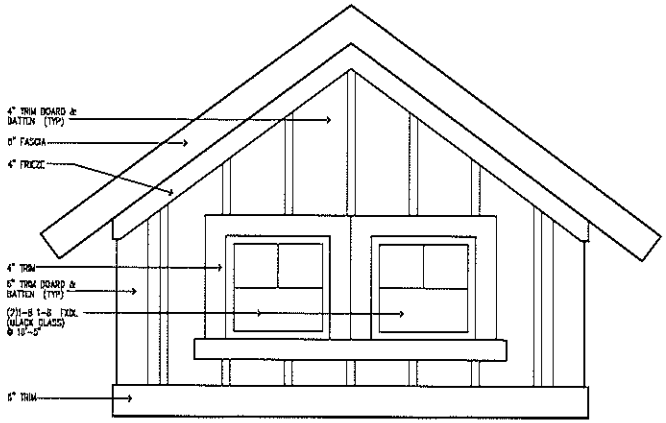

DORMER DETAIL

SCALE: 1/2" = 1'-0"

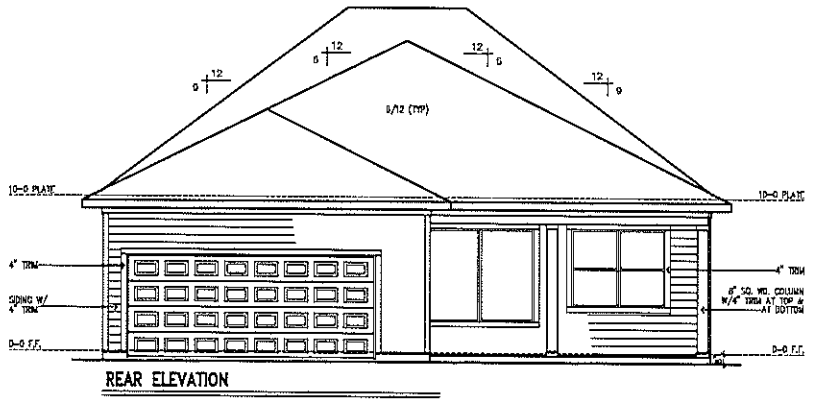

REAR ELEVATION

© Fields Ezell LP, 2015
The measurements, dimensions, and notes are guidelines for construction use only. The actual specifications of the finished structure may vary from what is shown and not be relied on as a representation of what the completed structure will look like.

David Weekley Homes

GS/M5/MV | Scale: 1/8" = 1'-0" | Rev.:

Date: 02/27/15

Lot: | Blk: | Sect:

Proj No.: | Job No.:

NORTH

5862-A

ELV-1

ALLENWOOD

INDIANAPOLIS

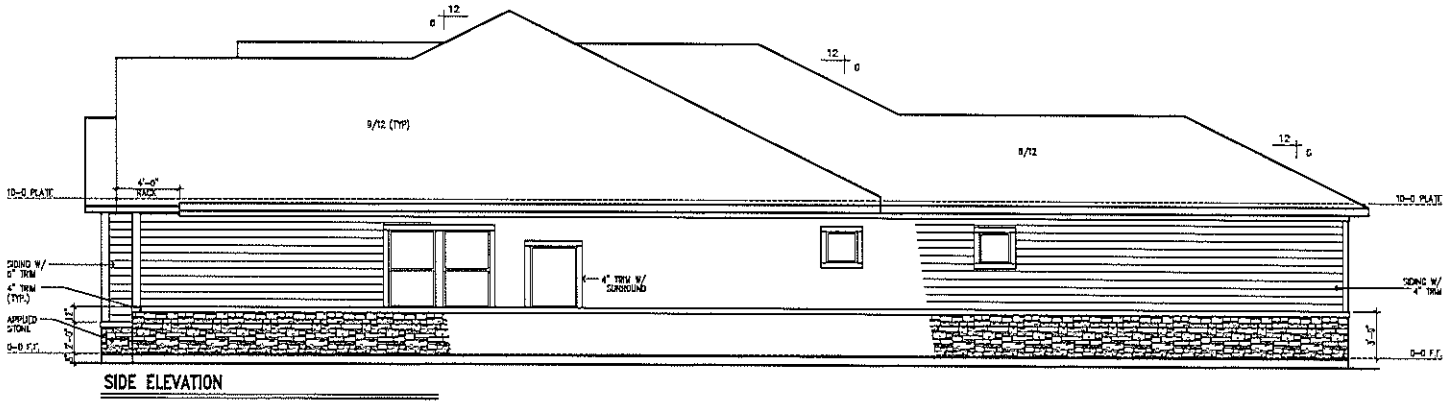

SIDE ELEVATION

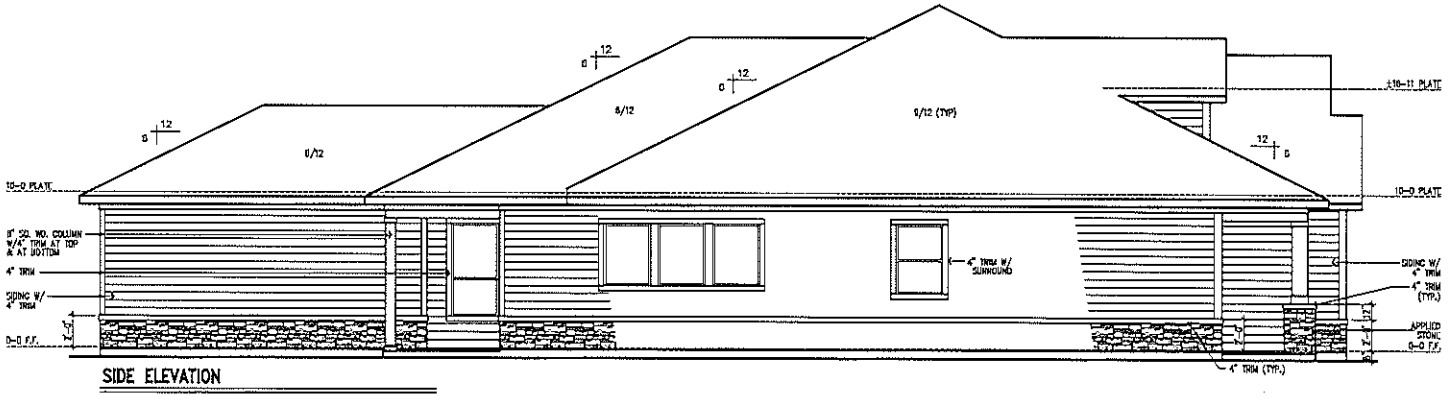

SIDE ELEVATION

© Weekley Homes L.P. 2015
The measurements, dimensions, and other specifications, shown on this document, are guidelines for construction use only. The actual specifications of the finished structure may vary. This document may not be relied upon as a representation of what the completed structure will look like.

David Weekley Homes

GS/MS/MV	Scale: 1/8" = 1'-0"
Date: 02/27/15	Rev:

Lot: Blk: Sect:
Proj. No:
Job No:

NORTH
5862-A
ELV-2
ALLENWOOD
INDIANAPOLIS

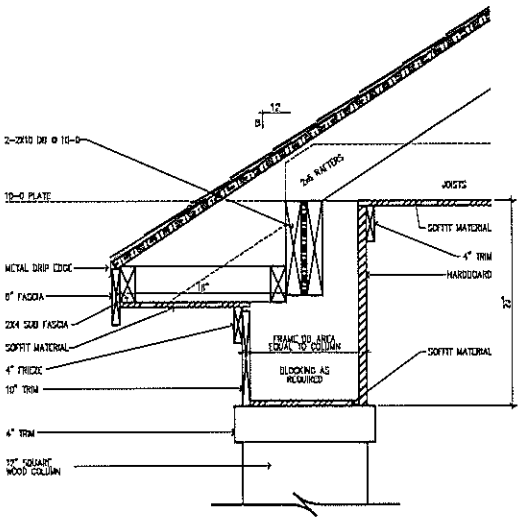

FRONT PORCH CORNICE DETAIL

SCALE: 1" = 1'-0"

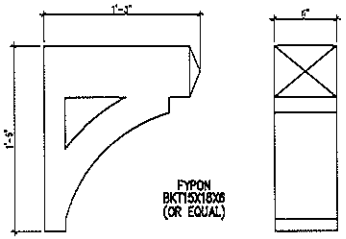

BRACKET DETAIL

SCALE: 1" = 1'-0"

TYP. PLATE HEIGHTS	
NOMINAL	ACTUAL
8-0 PLATE	7-11 5/8
9-0 PLATE	8-11 5/8
10-0 PLATE	9-11 5/8
11-0 PLATE	10-11 5/8
2ND FLOOR PLATE HEIGHTS (W/ 12" FLOOR SYSTEM)	
19-0 PLATE	18-11 7/8
20-0 PLATE	19-11 7/8
21-0 PLATE	20-11 7/8
2ND FLOOR PLATE HEIGHTS (W/ 14" FLOOR SYSTEM)	
19-0 PLATE	19-1 7/8
20-0 PLATE	20-1 7/8
21-0 PLATE	21-1 7/8

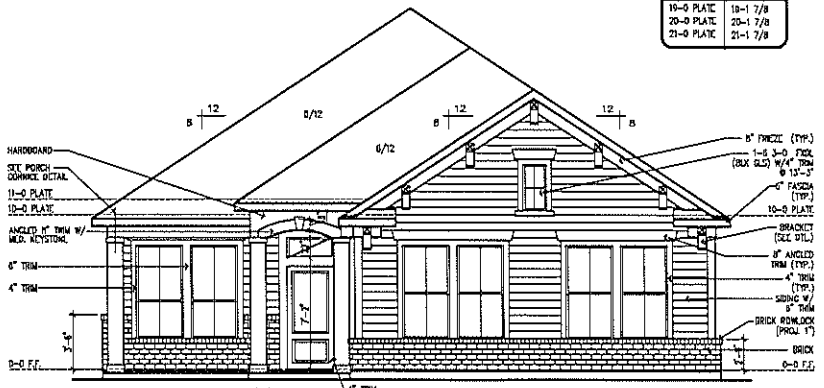

FRONT ELEVATION "B"

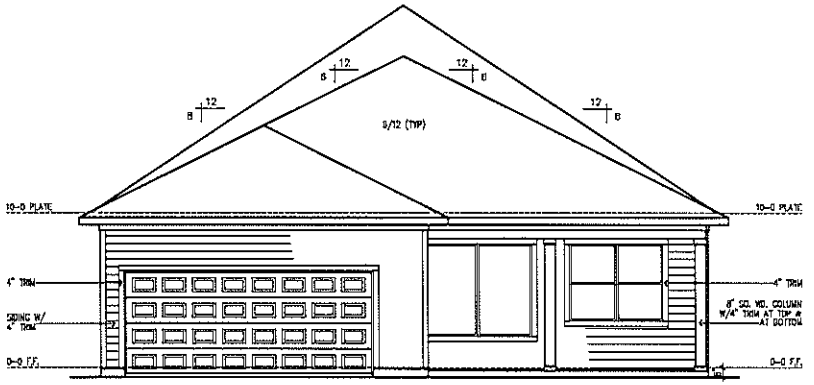

REAR ELEVATION

© Weekley Homes LP, 2015
The measurements, dimensions, and other specifications, shown on this document, are guidelines for construction use only. The actual specifications of the finished structure may vary. This document may not be relied on as a representation of what the completed structure will look like.

David Weekley Homes

GS/M5/MV | Scale: 1/8" = 1'-0"

Date: 02/27/15 | Rev.:

Proj. No.: | Lot:

Job No.: | Blk:

Sect:

NORTH

5862-B

ELV-1

ALLENWOOD

INDIANAPOLIS

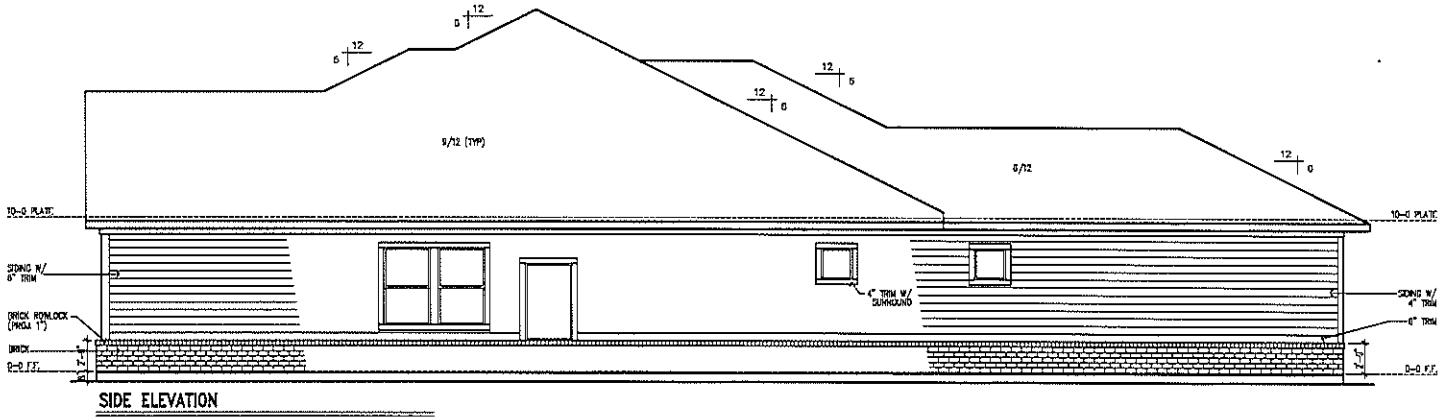

SIDE ELEVATION

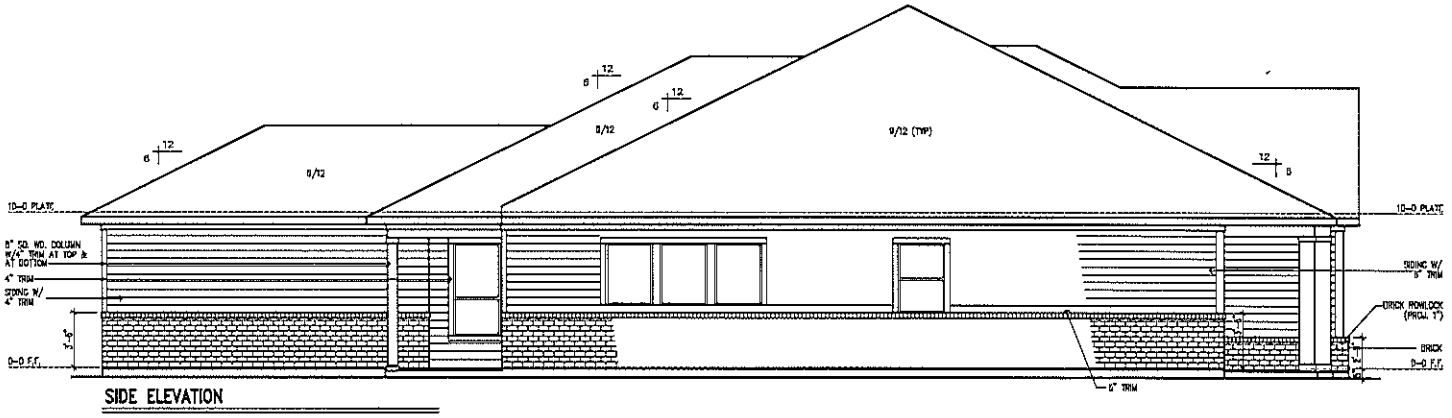

SIDE ELEVATION

© Weekley Homes L.P. 2015
The measurements, dimensions, and other specifications shown on this document are guidelines for construction use only. The actual specifications of the finished product may vary. This document may not be relied on as a representation of what the completed residence will look like.

David Weekley Homes

GS/MS/MV | Scale: 1/8" = 1'-0"

Date: 02/27/15 | Rev.:

Lot: | Blk: | Sect:

Proj No.:

Job No.:

NORTH

5862-B

ELV-2

ALLENWOOD

INDIANAPOLIS

TYP. PLATE HEIGHTS	
NOMINAL	ACTUAL
8-0 PLATE	7-11 5/8
9-0 PLATE	8-11 5/8
10-0 PLATE	9-11 5/8
11-0 PLATE	10-11 5/8
2ND FLOOR PLATE HEIGHTS (W/ 12" FLOOR SYSTEM)	
19-0 PLATE	18-11 5/8
20-0 PLATE	19-11 5/8
21-0 PLATE	20-11 5/8
2ND FLOOR PLATE HEIGHTS (W/ 14" FLOOR SYSTEM)	
19-0 PLATE	18-1 7/8
20-0 PLATE	20-1 7/8
21-0 PLATE	21-1 7/8

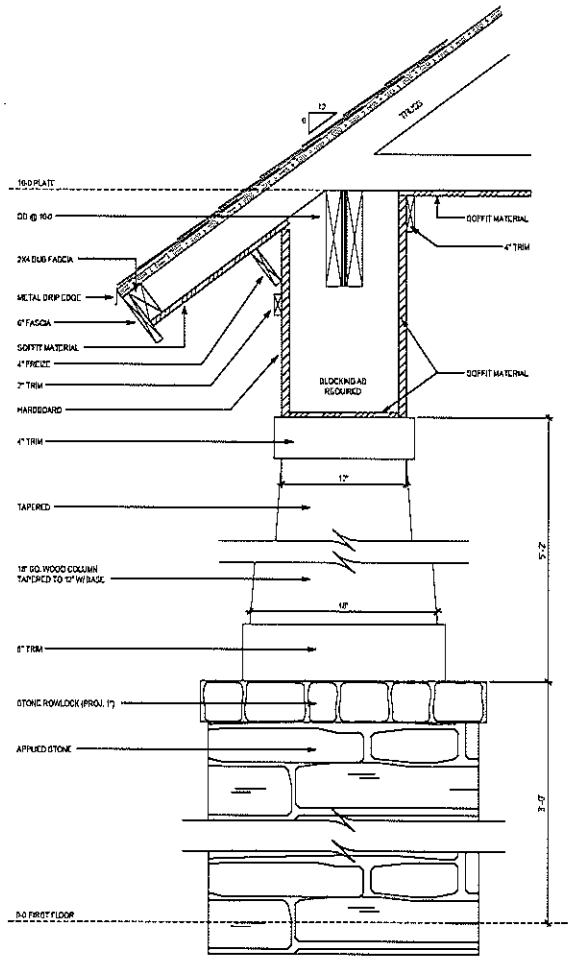

CORNICE DETAIL

SCALE: 1" = 1'-0"

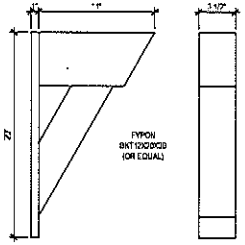

BRACKET DETAIL "A"

SCALE: 1" = 1'-0"

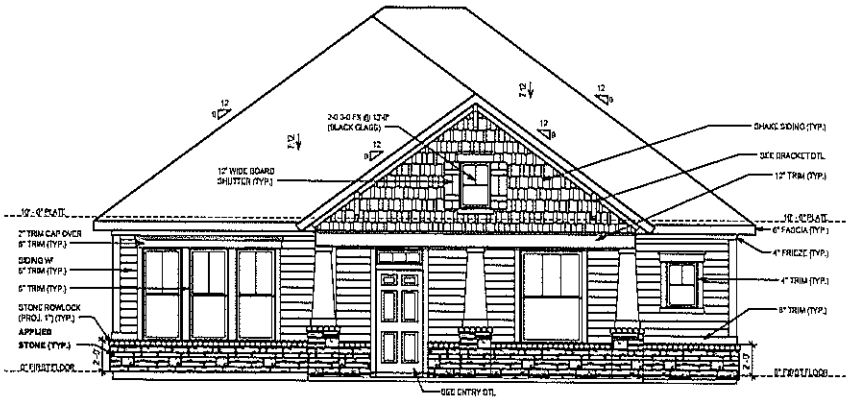

FRONT ELEVATION "A"

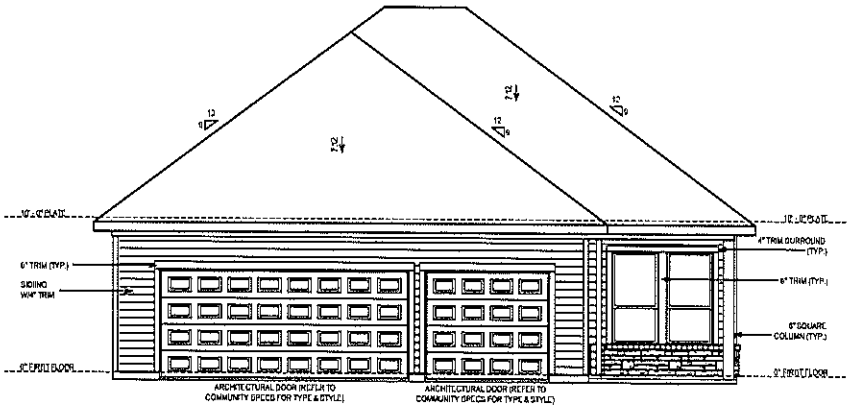

REAR ELEVATION

© Weekley Homes L.P. 2015
The reproduction, transfer, publication or use by any method in whole or in part without the written permission of Weekley Homes L.P. is prohibited. The architectural plans and specifications are copyrighted and are the property of Weekley Homes L.P. These plans and specifications are not to be changed or copied in any form or manner whatsoever nor are they to be assigned to any third party without first obtaining the express written permission and consent of Weekley Homes L.P.

David Weekley Homes

GS/DG/EM | Scale: 1/8"=1'-0" | Rev.

Date: 02/24/15

Proj. No.: | Lot: | Block: | Sect:

Job No.:

NORTH

5863-A

ELV-1

LOCKTON

INDIANAPOLIS

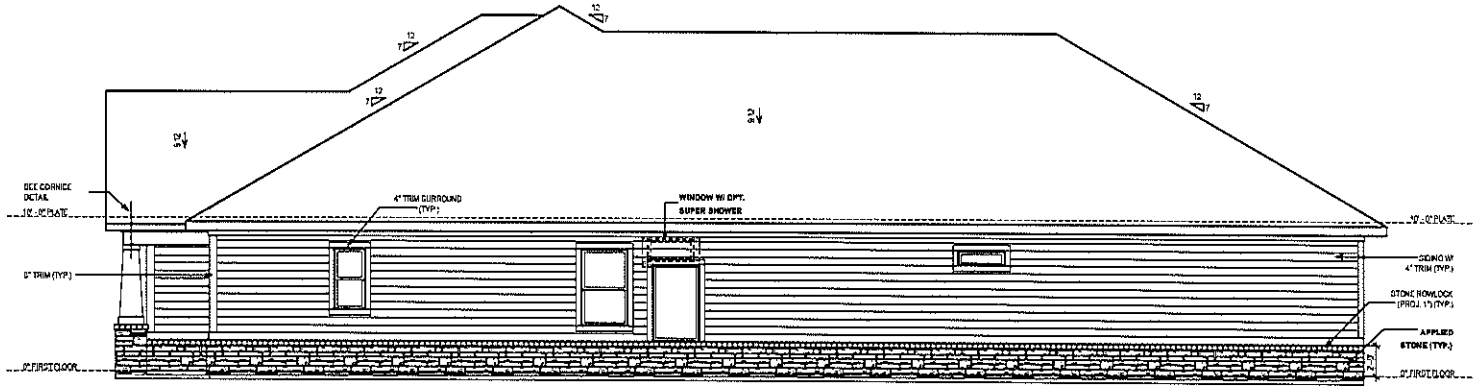

SIDE ELEVATION

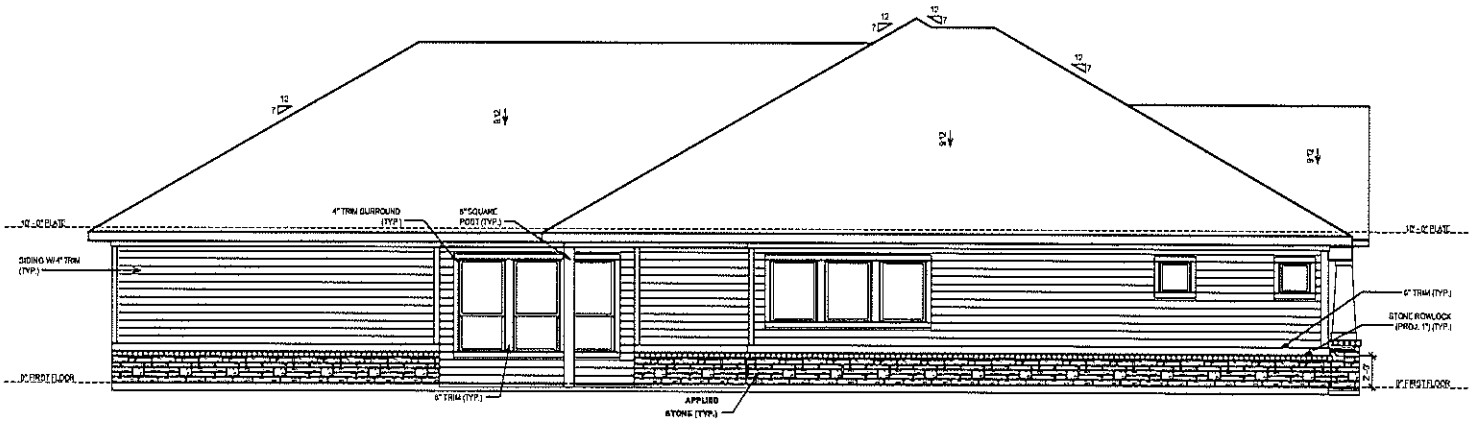

SIDE ELEVATION

© Weekley Homes L.P. 2015
The measurements, dimensions, and other specifications shown on this document are guidelines for construction use only. The actual specifications of the finished structure may vary. This document may not be relied on as a representation of what the completed structure will look like.

David Weekley Homes

GS/DG/EM | Scale: 1/8"=1'-0"

Date: 02/24/15 | Rev.

Proj. No.: | Lot:

Job No.: | Block:

Sect:

NORTH

5863-A

ELV-2

LOCKTON

INDIANAPOLIS

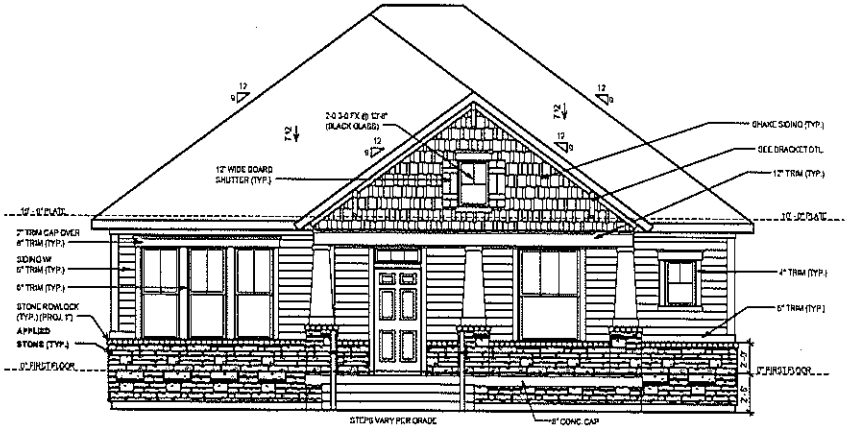

FRONT ELEVATION "A" W/ OPT. BASEMENT

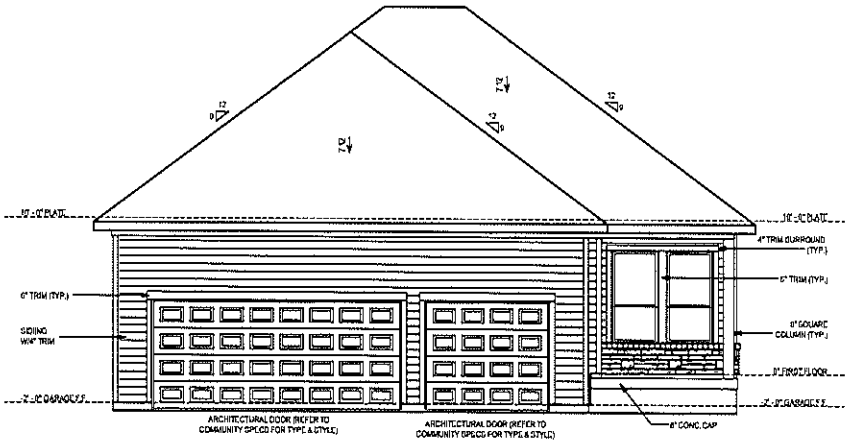

REAR ELEVATION W/ OPT. BASEMENT

© Weekley Homes L.P. 2015
The measurements, dimensions, and other specifications shown on this document are guidelines for construction only. The actual specifications of the finished structure may vary. This document may not be relied on as a representation of what the completed structure will look like.

David Weekley Homes

GS/DG/EM | Scale: 1/8"=1'-0"

Date: 02/24/15 | Rev:

Proj. No.: | Lot:

Job No.: | Block:

Sect:

NORTH
5863-A
ELV-3
LOCKTON
INDIANAPOLIS

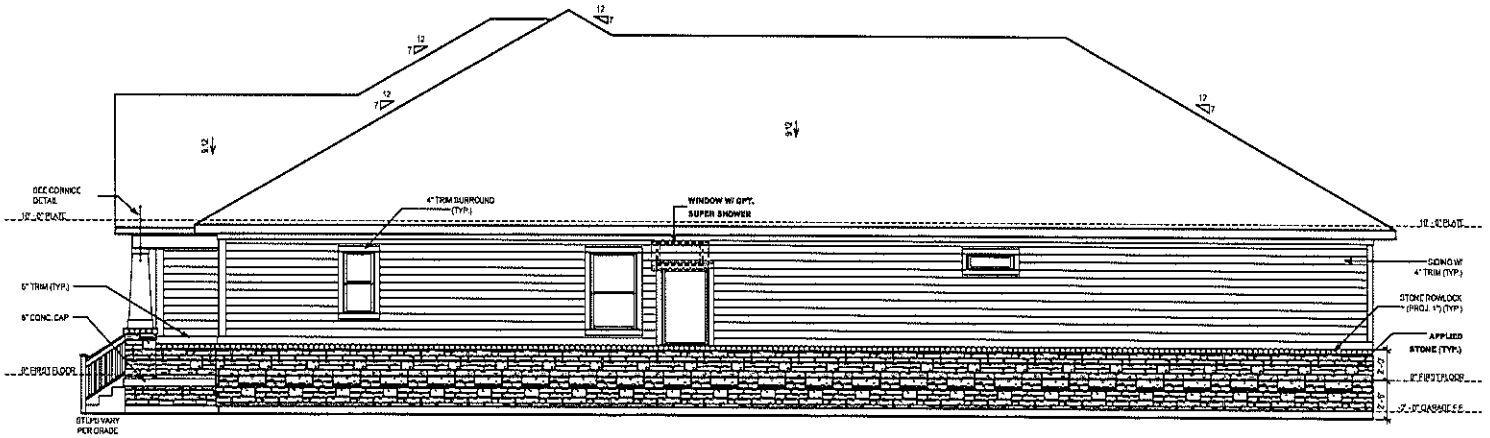

SIDE ELEVATION W/ OPT. BASEMENT

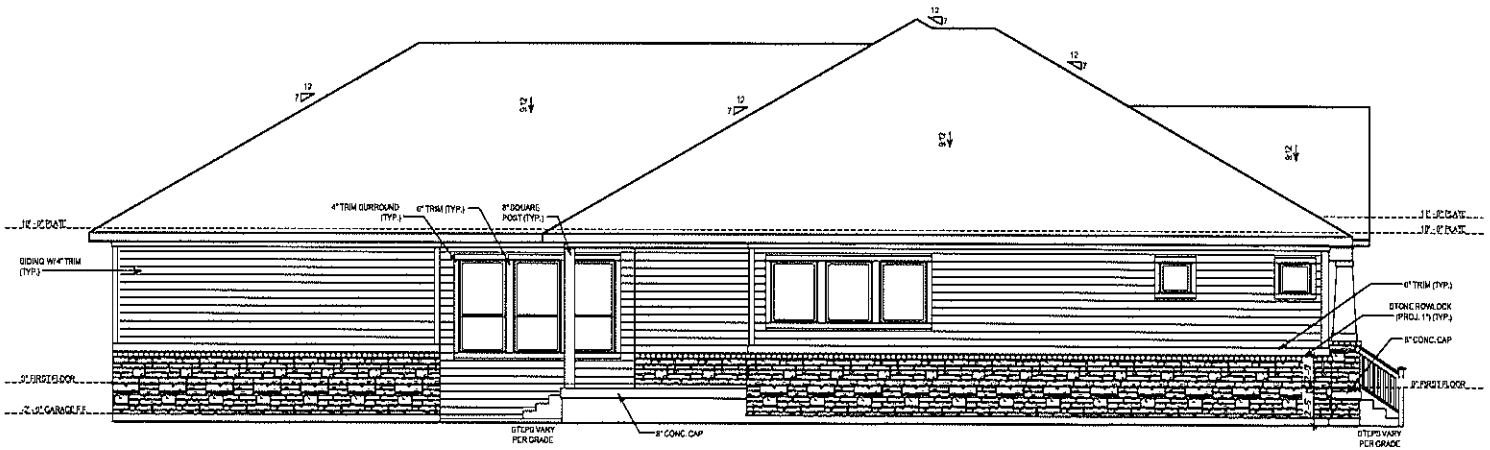

SIDE ELEVATION W/ OPT. BASEMENT

© Weekley Homes L.P. 2015
The measurements, dimensions, and other specifications shown on this document are guidelines for construction use only. The actual specifications of the finished structure may vary. This document may not be relied on as a representation of what the completed structure will look like.

David Weekley Homes

GS/DG/EM | Scale: 1/8"=1'-0"

Date: 02/24/15 | Rev:

Proj. No: | Lot:

Job No: | Block:

Sect:

NORTH

5863-A

ELV-4

LOCKTON

INDIANAPOLIS

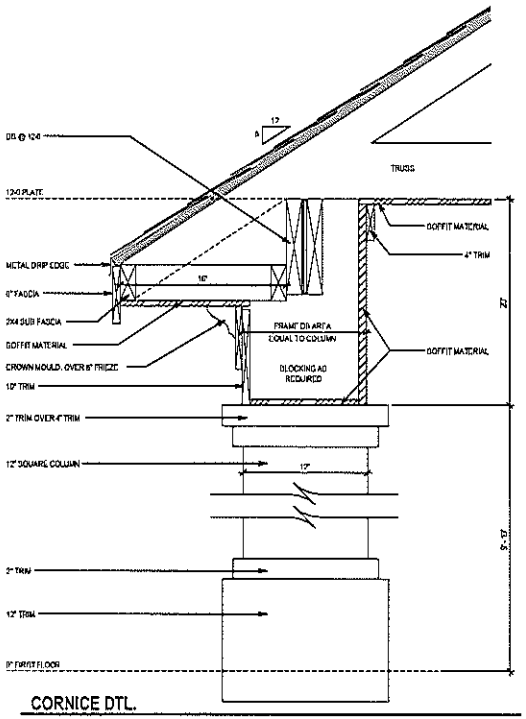

CORNICE DTL.

SCALE: 1" = 1'-0"

TYP. PLATE HEIGHTS	
NOMINAL	ACTUAL
8-0 PLATE	7-11 5/8
9-0 PLATE	8-11 5/8
10-0 PLATE	9-11 5/8
11-0 PLATE	10-11 5/8
2ND FLOOR PLATE HEIGHTS (W/ 12" FLOOR SYSTEM)	
18-0 PLATE	18-11 5/8
20-0 PLATE	19-11 5/8
21-0 PLATE	20-11 5/8
2ND FLOOR PLATE HEIGHTS (W/ 14" FLOOR SYSTEM)	
19-0 PLATE	19-1 7/8
20-0 PLATE	20-1 7/8
21-0 PLATE	21-1 7/8

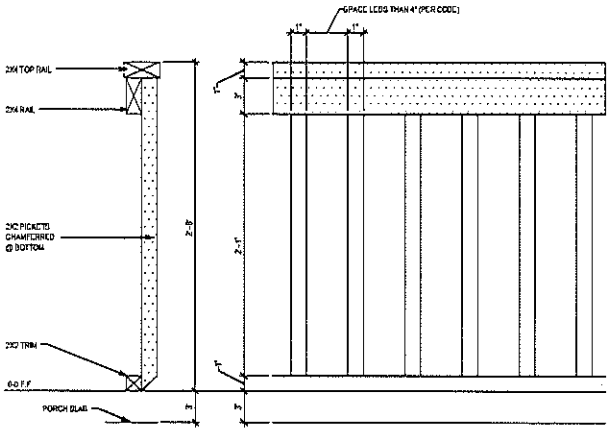

PORCH RAILING DETAIL

SCALE: 1" = 1'-0"

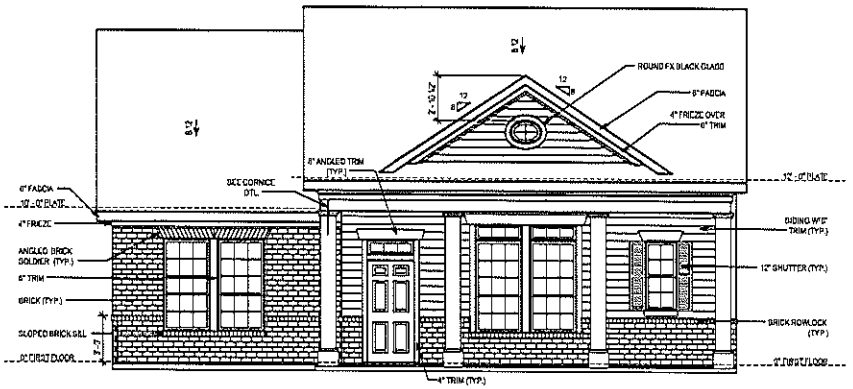

FRONT ELEVATION "B"

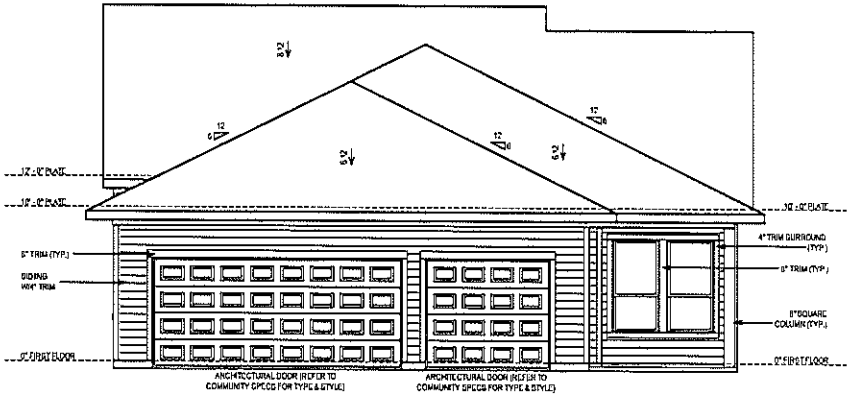

REAR ELEVATION

© Weekley Homes L.P. 2015
The architectural drawings, plans, and other documents prepared by Weekley Homes are guidelines for construction use only. The actual specifications of the finished structure may vary. This document may not be altered in any way. Weekley Homes will not be liable for any use or modification to the drawings. Structure will look like.

David Weekley Homes

GS/DG/EM | Scale: 1/8"=1'-0" | Rev.

Date: 02/24/15

Proj. No.: | Lot: | Block: | Sect:

Job No.:

NORTH

5863-B

ELV-1

LOCKTON

INDIANAPOLIS

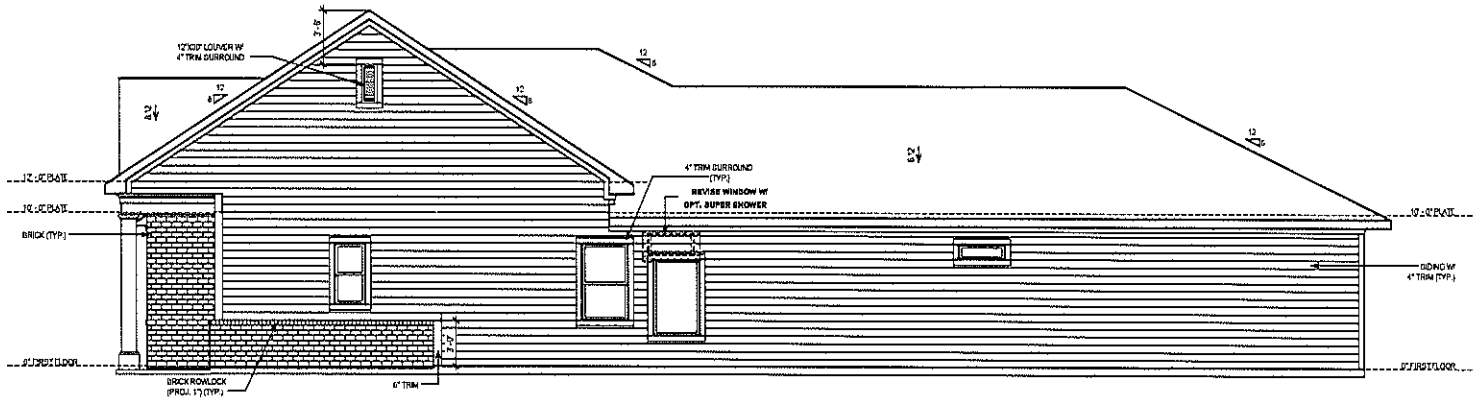

SIDE ELEVATION

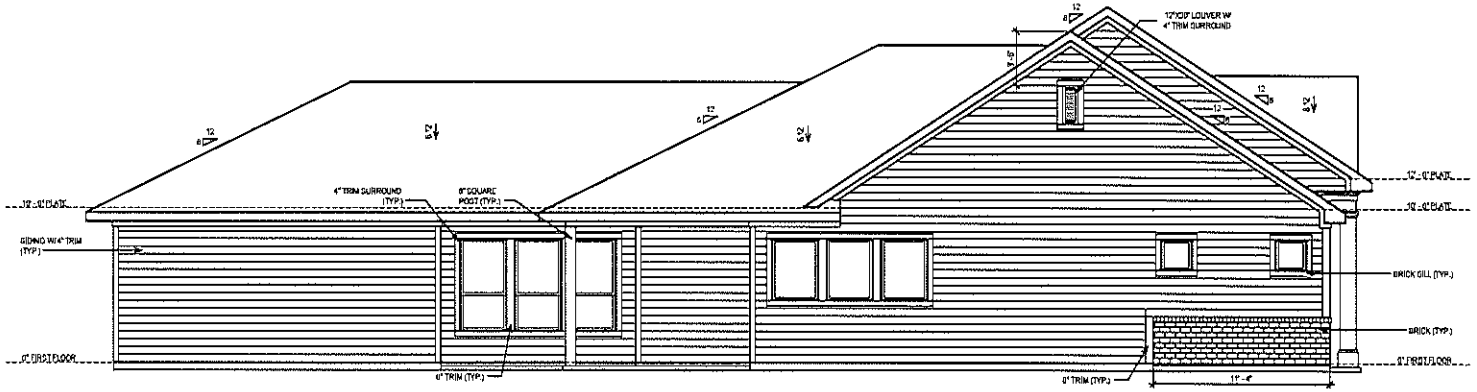

SIDE ELEVATION

© Weekley Homes L.P. 2015
The measurements, dimensions, and other specifications shown on this document are guidelines for construction use only. The actual specifications of the finished structure may vary. This document may not be relied on as a representation of what the completed structure will look like.

David Weekley Homes

GS/DG/EM | Scale: 1/8"=1'-0"

Date: 02/24/15 | Rev:

Proj. No.: | Lot:

Job No.: | Block:

Sect:

NORTH

5863-B

ELV-2

LOCKTON

INDIANAPOLIS

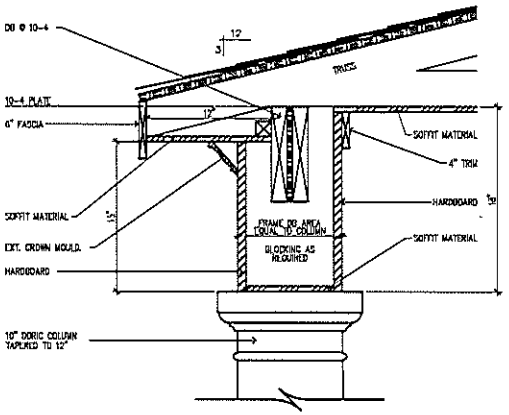

FRONT PORCH CORNICE DETAIL

SCALE: 1" = 1'-0"

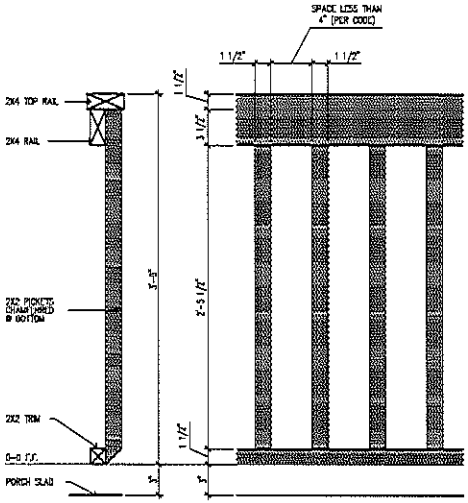

PORCH RAIL DETAIL

SCALE: 1" = 1'-0"

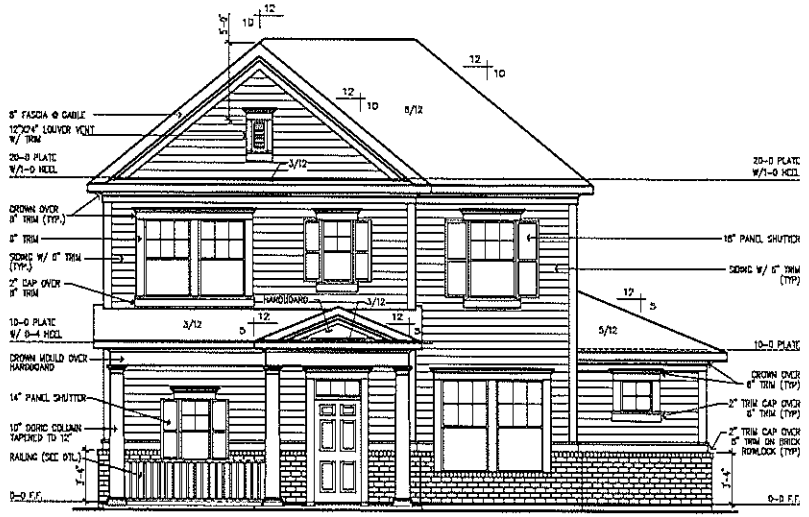

FRONT ELEVATION "A" (COLONIAL)

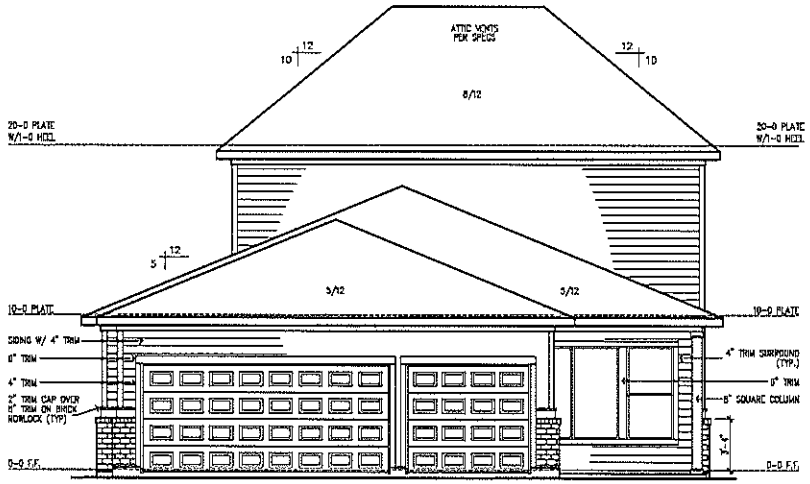

REAR ELEVATION W/ OPT. 3 CAR GARAGE

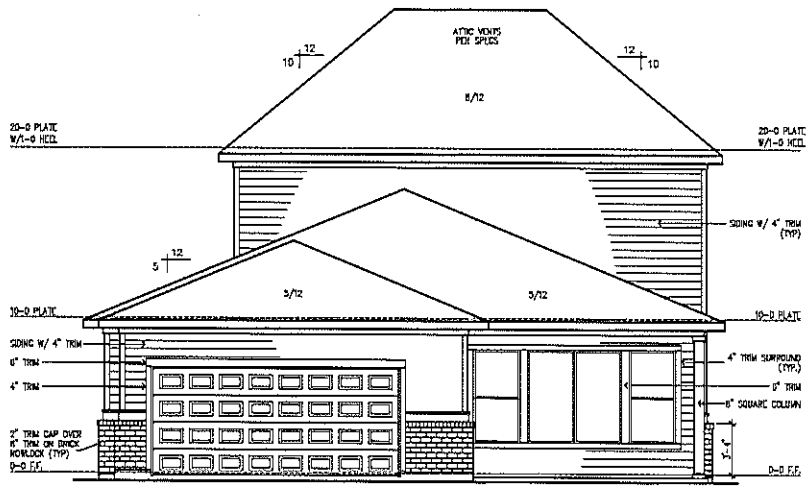

REAR ELEVATION

© Weekley Homes L.P. 2014
The measurements, dimensions, and other specifications, shown on this document, are guidelines for construction and only. The actual specifications of the finished structure may vary. This document may not be relied on as a representation of what the completed structure will look like.

David Weekley Homes

GS/JCA/MH | Scale: 1/8" = 1'-0"

Date: 11/18/2014 | Rev.:

Lot:

Blk:

Sect:

Proj No.:

Job No.:

HARMONY 50'

NORTH

5864-A

ELV-1

CASTLEDALE

INDIANAPOLIS

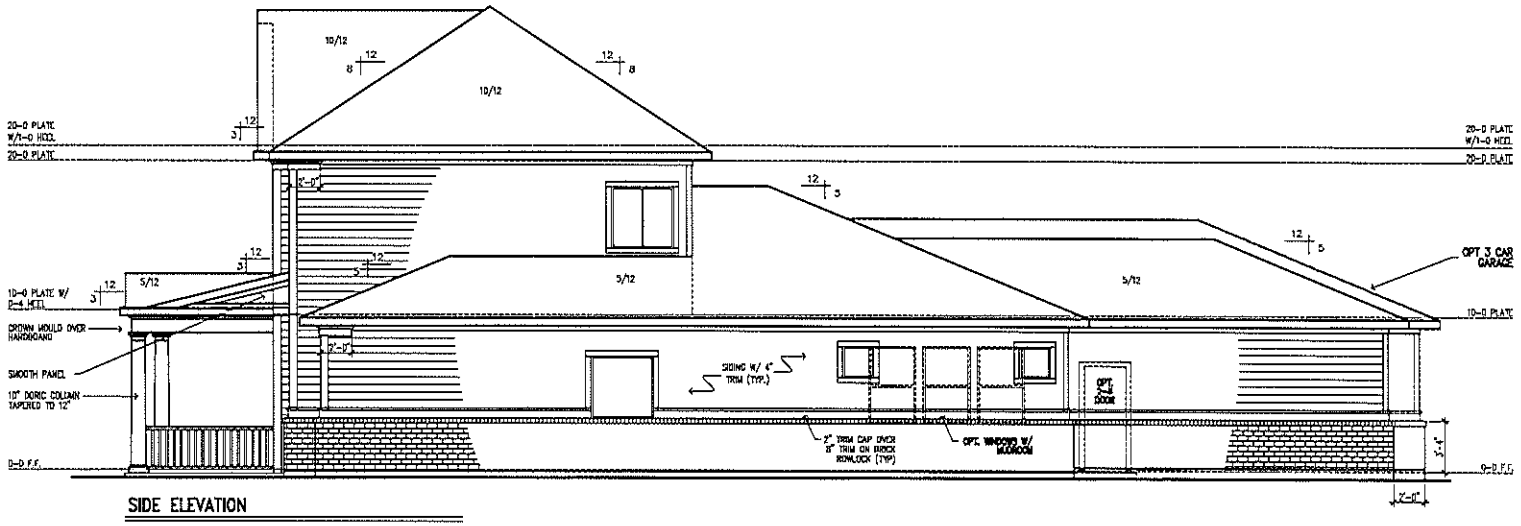

SIDE ELEVATION

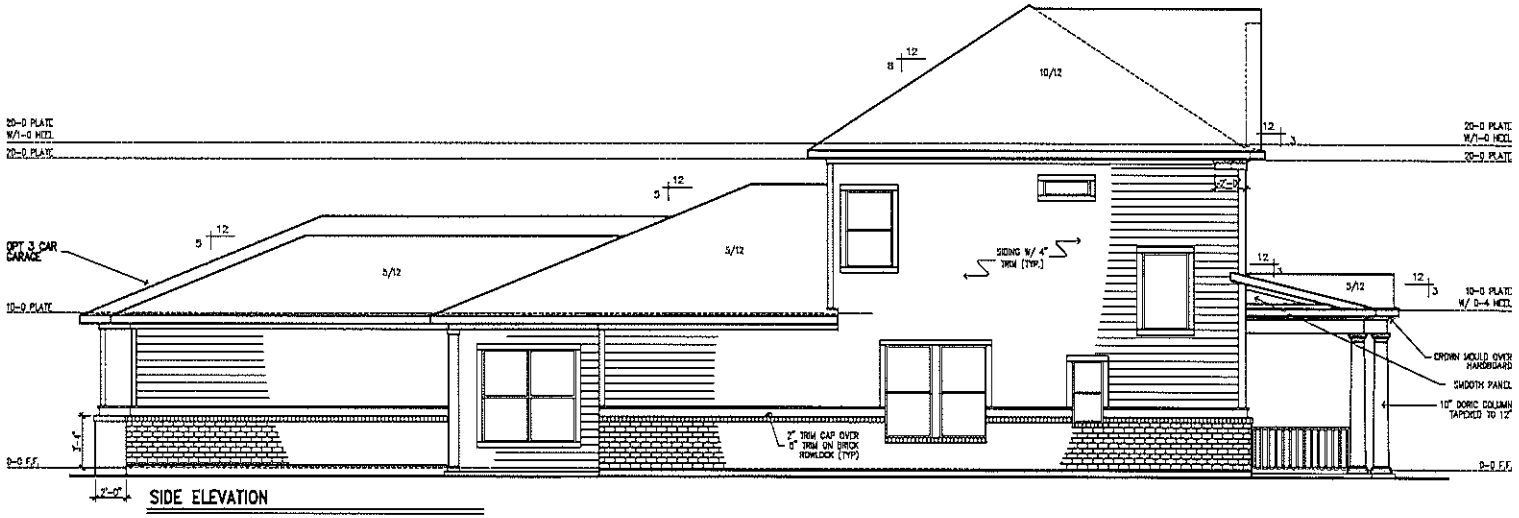

SIDE ELEVATION

© Weekley Homes L.P. 2014
The measurements, dimensions, and other specifications, shown on this document, are published for construction use only. The actual specifications of the finished structure may vary. This document may not be relied on as a representation of what the completed structure will look like.

David Weekley Homes

GS/JCA/MH | Scale: 1/8" = 1'-0"

Date: 11/18/2014 | Rev.:

Lot:

Bk:

Sect:

Proj. No.:

Job No.:

HARMONY 50'

NORTH

5864-A

ELV-2

CASTLEDALE

INDIANAPOLIS

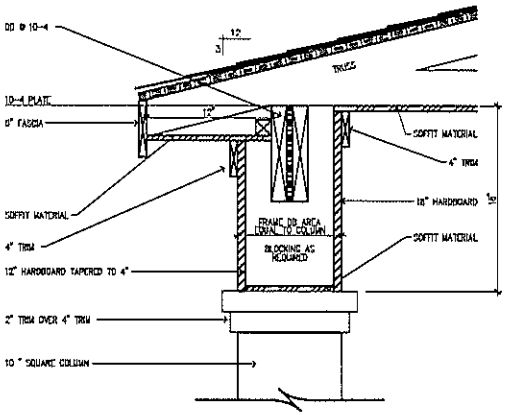

FRONT PORCH CORNICE DETAIL

SCALE: 1" = 1'-0"

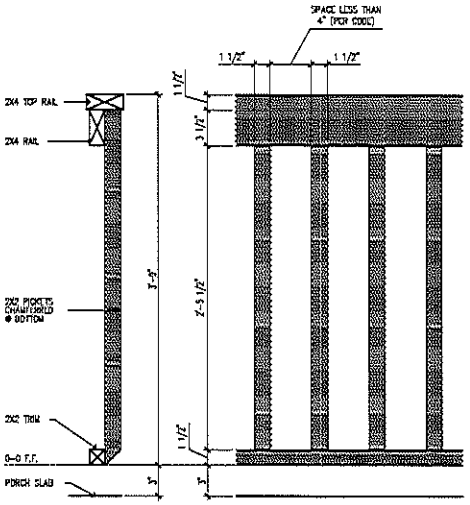

PORCH RAIL DETAIL

SCALE: 1" = 1'-0"

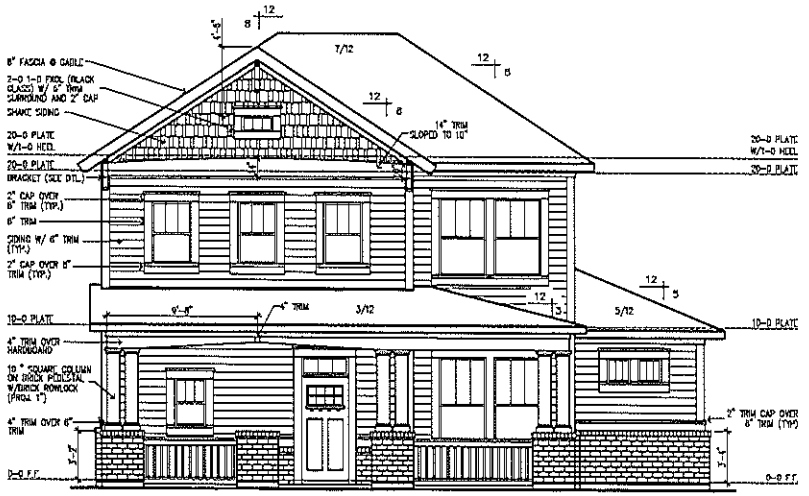

FRONT ELEVATION "B" (CRAFTSMAN)

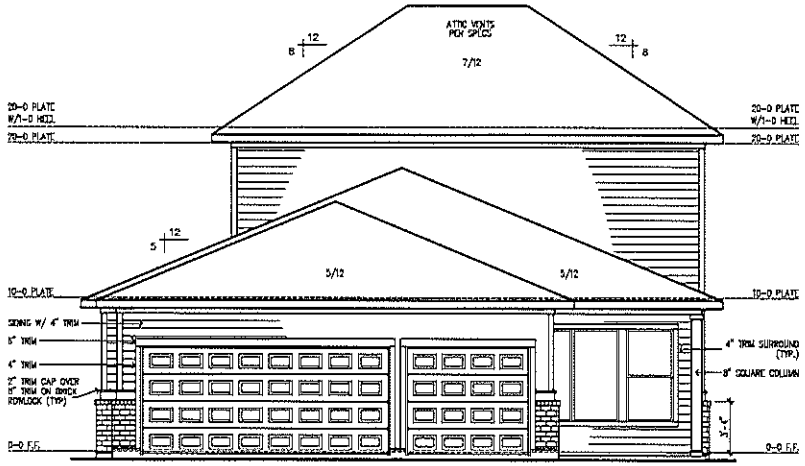

REAR ELEVATION W/ OPT. 3 CAR GARAGE

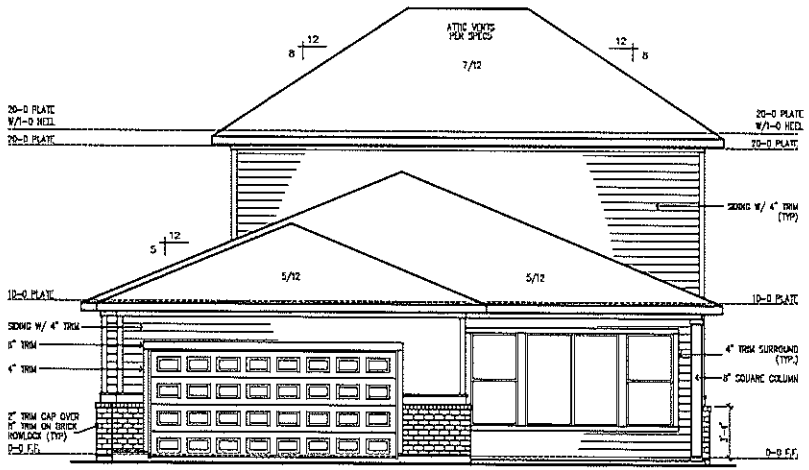

REAR ELEVATION

© Weekley Homes LP, 2011
The measurements, dimensions, and other specifications, shown on this document, are guidelines for construction use only. The actual specifications of the finished structure may vary. This document may not be relied on as a representation of what the completed structure will look like.

David Weekley Homes

GS/JCA/MH | Scale: 1/8" = 1'-0"

Date: 11/18/2014 | Rev.:

Lot:

Bk:

Sect:

Proj. No.:

Job No.:

HARMONY 50'

NORTH

5864-B

ELV-1

CASTLEDALE

INDIANAPOLIS

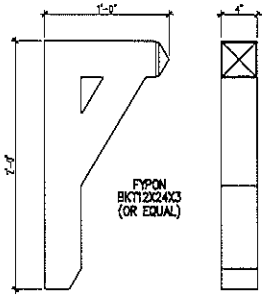

BRACKET DETAIL

SCALE: 1" = 1'-0"

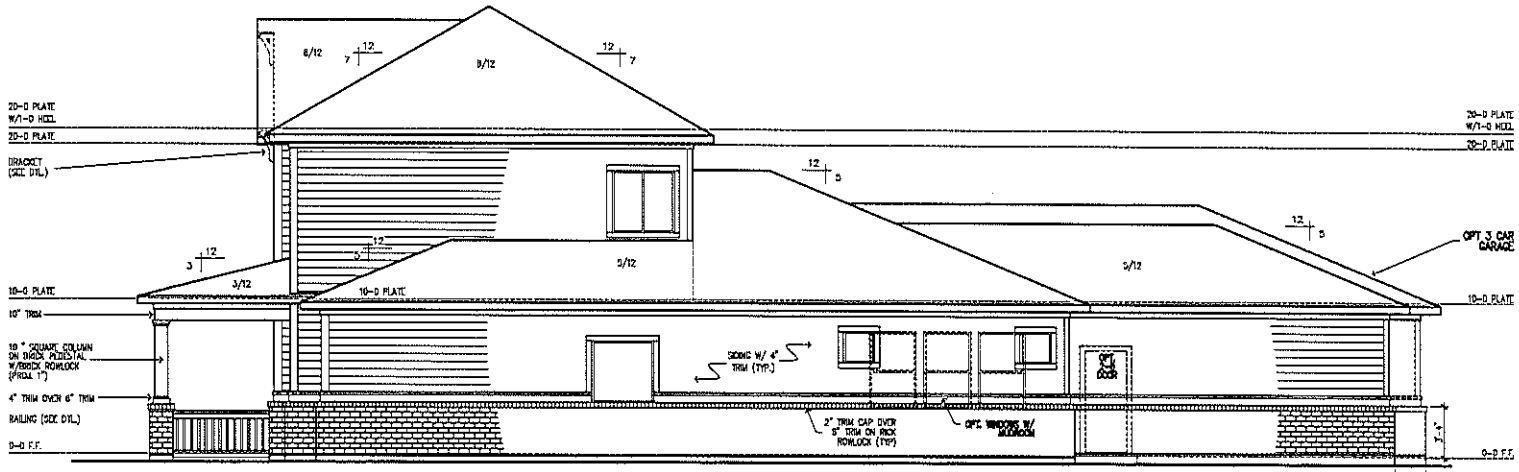

SIDE ELEVATION

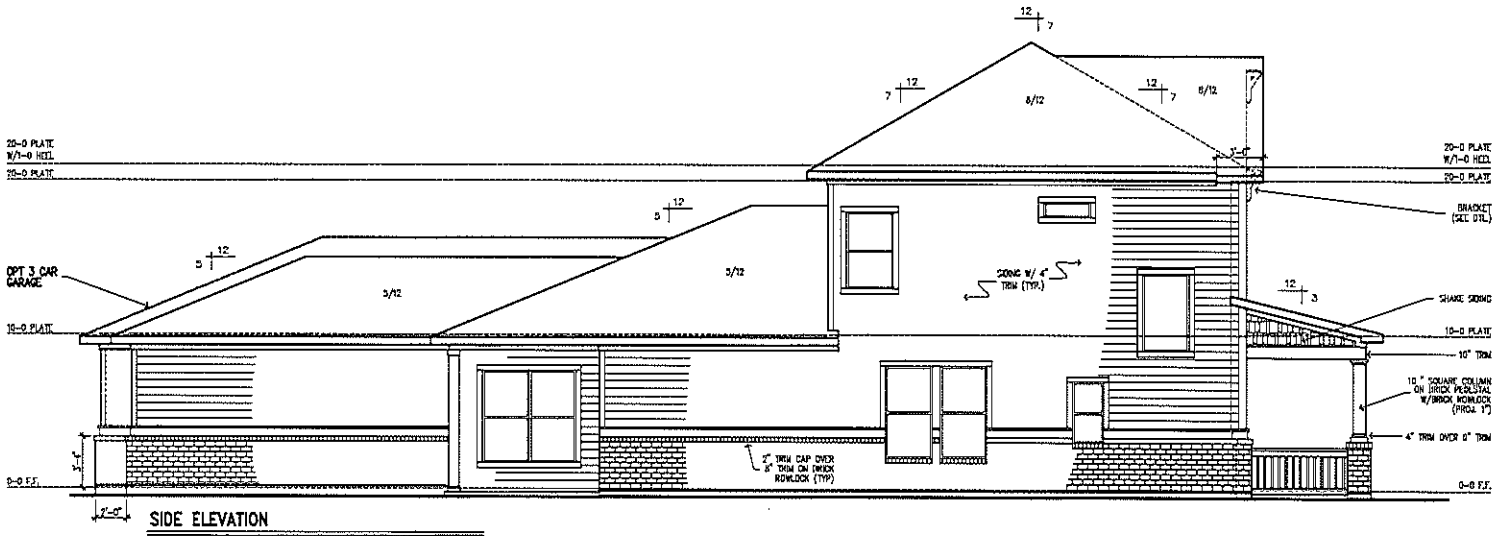

SIDE ELEVATION

© Weekley Homes L.P. 2014
The measurements, dimensions, and other specifications shown on this document, including those shown on any electronic media, are for reference purposes only. The actual specifications of the finished structure may vary. This document may not be relied on as a representation of what the completed structure will look like.

David Weekley Homes

GS/JCA/MH | Scale: 1/8" = 1'-0"

Date: 11/18/2014 | Rev:

HARMONY 50'

Proj No.: | Lot:

Job No.: | Blk:

Sect:

NORTH

5864-B

ELV-2

CASTLEDALE

INDIANAPOLIS

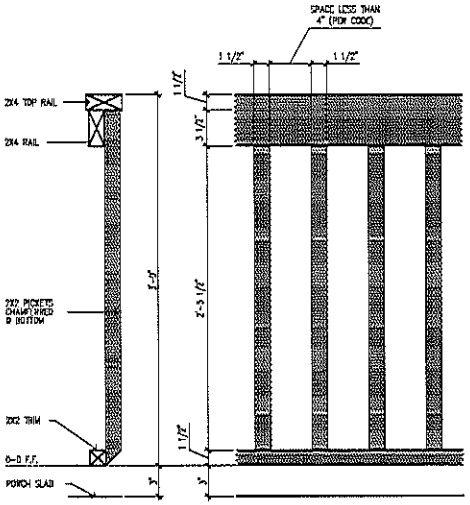

PORCH RAIL DETAIL

SCALE: 1" = 1'-0"

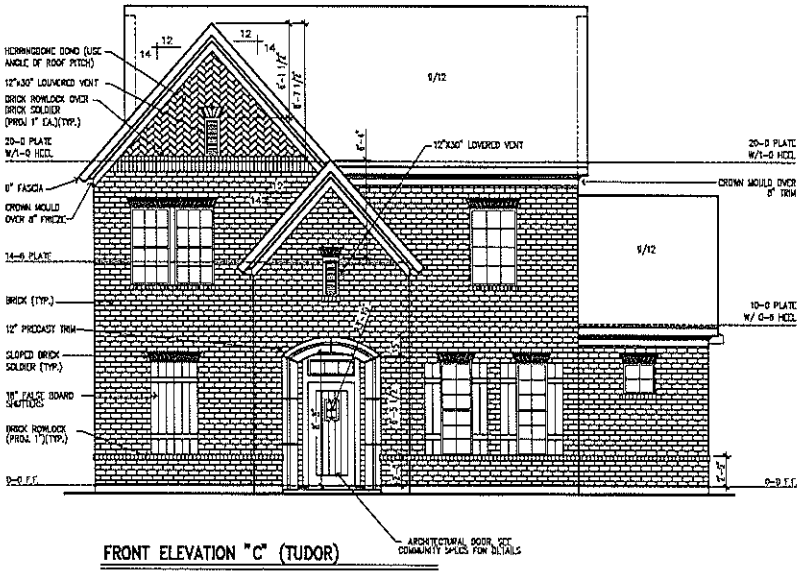

FRONT ELEVATION "C" (TUDOR)

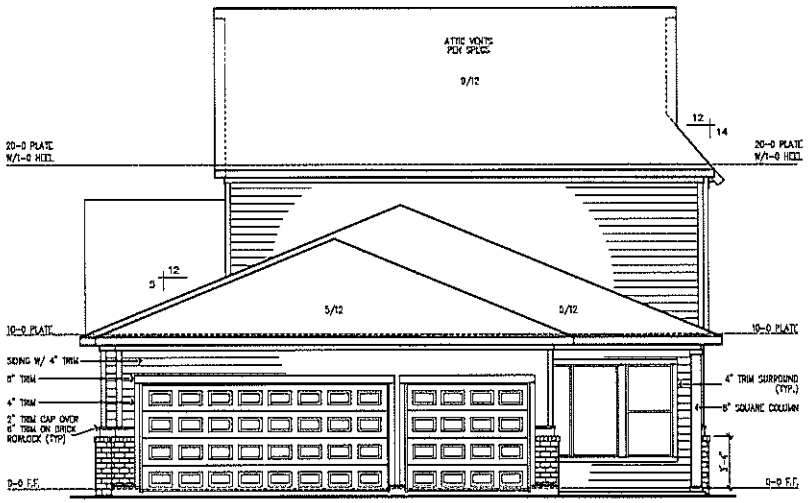

REAR ELEVATION W/ OPT. 3 CAR GARAGE

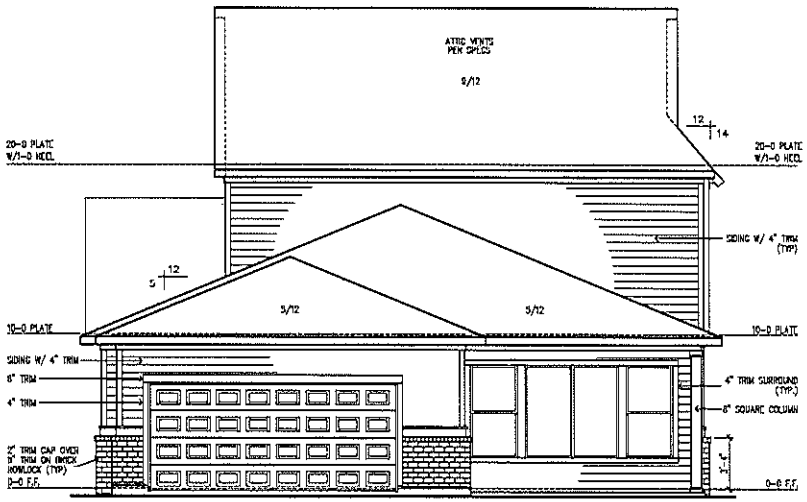

REAR ELEVATION

© Weekley Homes L.P. 2011
The measurements, dimensions, and other specifications shown on this document are approximate. Actual measurements may vary. The actual specifications of the finished structure may vary. This document may not be relied on as a representation of what the completed structure will look like.

David Weekley Homes

GS/JCA/MH | Scale: 1/8" = 1'-0"

Date: 11/18/2014 | Rev.:

HARMONY 50'

Lot: | Blk: | Sect:

Proj No.: | Job No.:

NORTH

5864-C

ELV-1

CASTLEDALE

INDIANAPOLIS

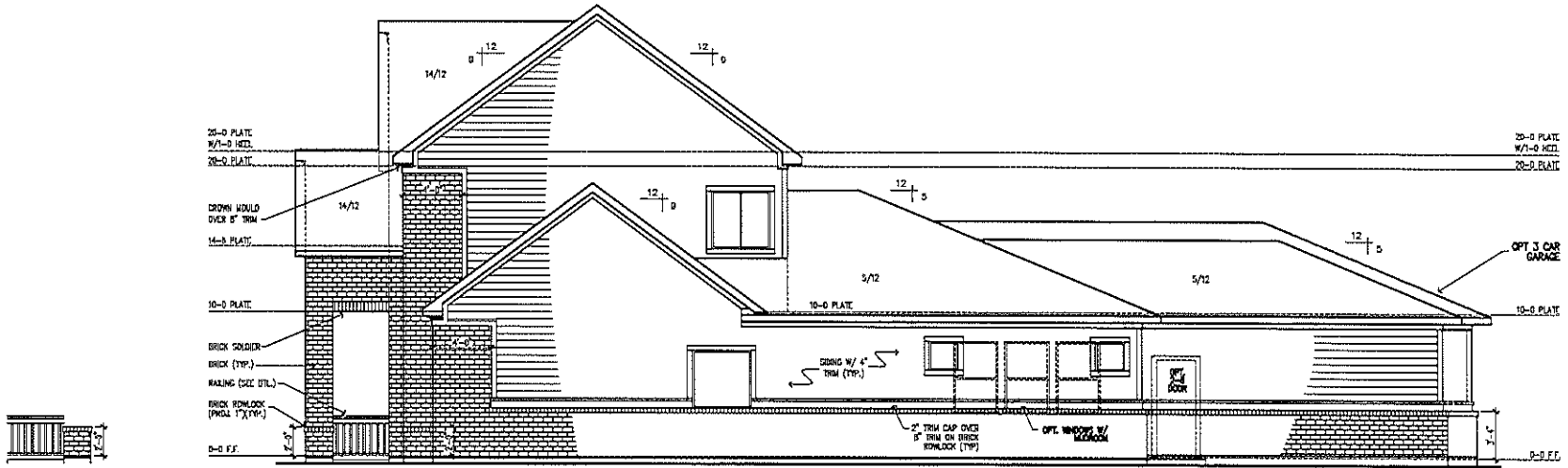

SIDE ELEVATION

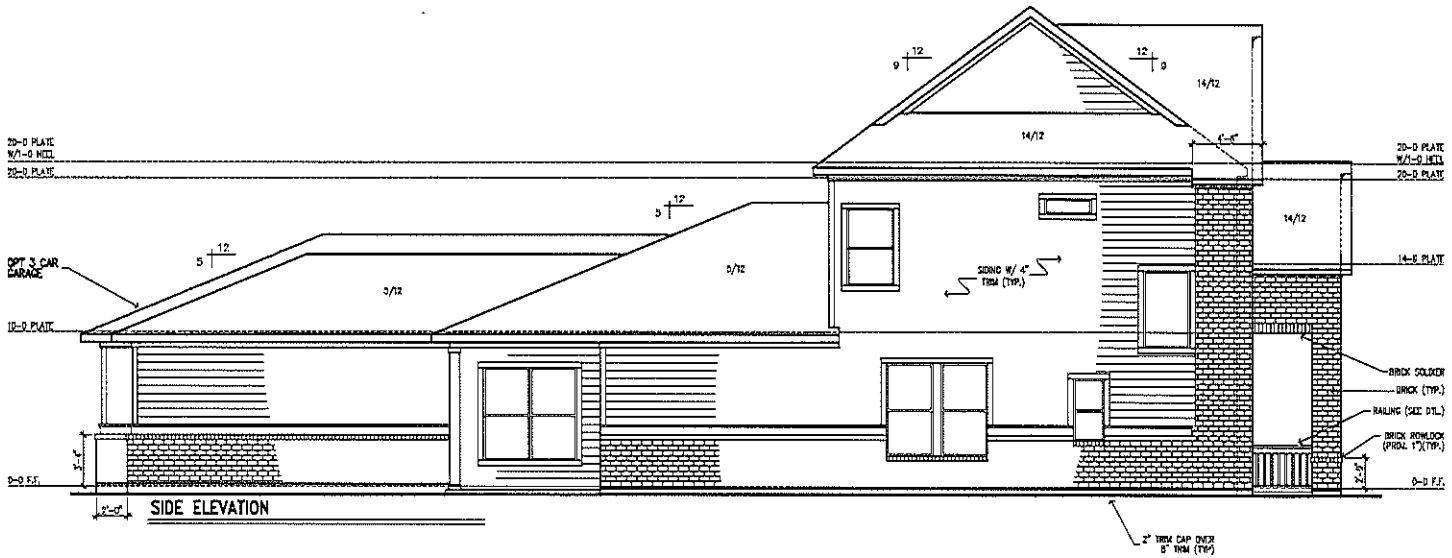

SIDE ELEVATION

© Weekley Homes L.P. 2014
This measurements, dimensions, and other specifications shown on this document, are subject to change without notice. The actual specifications of the finished structure may vary. This document may not be relied on as a representation of what the completed structure will look like.

David Weekley Homes

GS/JCA/MH | Scale: 1/8" = 1'-0"

Date: 11/18/2014 | Rev.:

HARMONY 50'

Proj. No.: | Lot:

Job No.: | Blk.:

Sect:

NORTH

5864-C

ELV-2

CASTLEDALE

INDIANAPOLIS