CONSTRUCTION PLANS
FOR
CVS / PHARMACY

STORE #10591
161st STREET AND SPRINGMILL ROAD
WESTFIELD, INDIANA

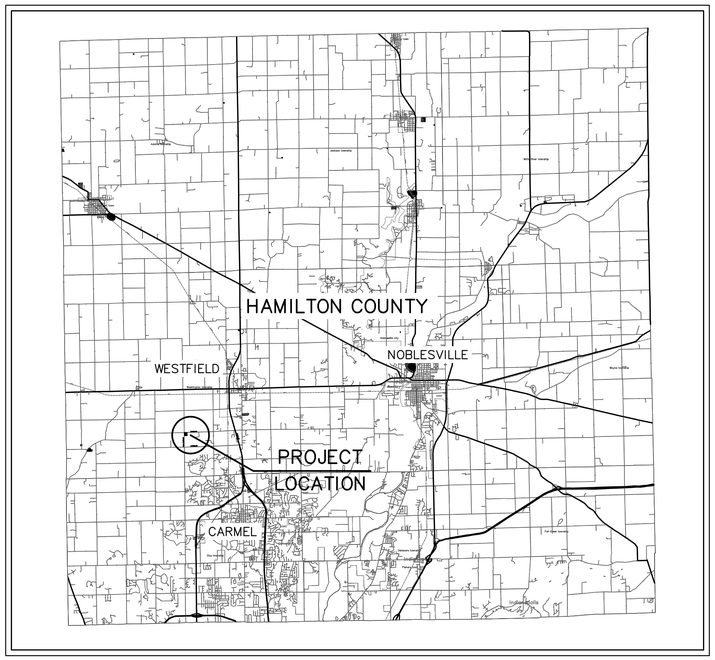

LOCATION MAP
NOT TO SCALE

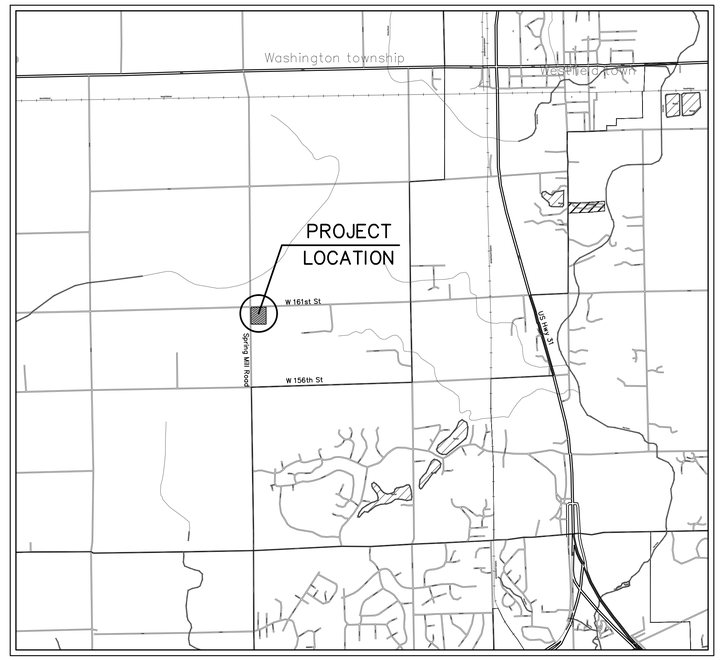

VICINITY MAP
NOT TO SCALE

INDEX

DESCRIPTION	Sheet No.
TITLE SHEET	C001
CIVIL SPECIFICATIONS	C002
CIVIL SPECIFICATIONS	C003
GENERAL NOTES	C004
EXISTING TOPOGRAPHY – DEMO PLAN	C101
DEMOLITION PLAN	C110
SITE PLAN	C201
UTILITY PLAN	C301
GRADING PLAN	C401
EROSION CONTROL PLAN	C501
STORMWATER POLLUTION PREVENTION PLAN	C510
EROSION CONTROL DETAILS	C520
EROSION CONTROL DETAILS	C521
SITE DETAILS	C601
SITE DETAILS	C602
SITE DETAILS	C603
PLANTING PLAN	C701
PLANTING DETAILS	C702
SITE PHOTOMETRIC PLAN	C801
SITE PHOTOMETRIC PLAN	C802

PLAN DATE: 05/29/2015

REV	DATE	DESCRIPTION
1	7-10-2015	TAC COMMENTS

NOTE:
DESIGN AND CONSTRUCTION OF THIS PROJECT SHALL COMPLY WITH THE HAMILTON COUNTY SURVEYOR'S OFFICE AND THE CITY OF WESTFIELD CONSTRUCTION SPECIFICATIONS AND STANDARD DETAILS.

NOTE:
THE CONTRACTOR IS RESPONSIBLE FOR PRESERVING ALL PROPERTY CORNERS AND BENCHMARKS OR RELOCATING ANY AND ALL BENCHMARKS IF NEEDED TO FACILITATE CONSTRUCTION.

CAUTION !!

THE LOCATIONS OF ALL EXISTING UNDERGROUND UTILITIES SHOWN ON THIS PLAN ARE BASED UPON ABOVE GROUND EVIDENCE (including, but not limited to, manholes, inlets, valves, and marks made upon the ground by others) AND ARE SPECULATIVE IN NATURE. THERE MAY ALSO BE OTHER EXISTING UNDERGROUND UTILITIES FOR WHICH THERE IS NO ABOVE GROUND EVIDENCE OR FOR WHICH NO ABOVE GROUND EVIDENCE WAS OBSERVED. THE EXACT LOCATIONS OF SAID EXISTING UNDERGROUND UTILITIES SHALL BE VERIFIED BY THE CONTRACTOR PRIOR TO ANY AND ALL CONSTRUCTION.

1-800-382-5544
CALL TOLL FREE
- INDIANA UNDERGROUND -

UTILITY CONTACTS

CITY OF WESTFIELD - PUBLIC WORKS
JEREMY LOLLAR
2706 EAST 171st STREET
WESTFIELD, INDIANA 46074
(317) 804-3100

CITY OF WESTFIELD - STORMWATER
WES ROOD
2706 EAST 171st STREET
WESTFIELD, INDIANA 46074
(317) 804-3100

CITY OF WESTFIELD - FIRE DEPARTMENT
GARRY HARLING
17535 DARTOWN ROAD
WESTFIELD, INDIANA 46074
(317) 804-3307

CITY OF WESTFIELD - ECONOMIC DEVELOPMENT
MATT SKELTON
2728 EAST 171st STREET
WESTFIELD, INDIANA 46074
(317) 804-3170

SCHOOL DISTRICT
WESTFIELD WASHINGTON SCHOOLS
322 WEST MAIN STREET
WESTFIELD, INDIANA 46074
(317) 867-8000

COMMUNICATIONS
BRIGHT HOUSE NETWORKS
3080 ROOSEVELT AVE
INDIANAPOLIS, INDIANA 46218

HAMILTON COUNTY SURVEYOR'S OFFICE
GREG HOYES
ONE HAMILTON COUNTY SQUARE, SUITE 188
NOBLESVILLE, INDIANA 46060
(317) 776-8495

HAMILTON COUNTY HIGHWAY DEPARTMENT
DAVE LUCAS
1700 S. 10th STREET
NOBLESVILLE, INDIANA 46060
(317) 773-7770

ELECTRIC:
DUKE ENERGY - NOBLESVILLE OFFICE
TIM HARDIN
100 SOUTH MILL CREEK ROAD
NOBLESVILLE, INDIANA 46060
(800) 521-2232

COMMUNICATIONS:
COMCAST CABLE
MATT STRINGER
9750 EAST 65th STREET
INDIANAPOLIS, INDIANA 46220
(317) 295-6493

AT&T
STEVE KREBS
5858 N. COLLEGE
INDIANAPOLIS, INDIANA 46220
(317) 252-4275

INDIANA GAS / VECTREN

RESA GLOVER & CHAD MILLER
P.O. BOX 1700
NOBLESVILLE, INDIANA 46061
(317) 776-5550

CITIZENS GAS OF WESTFIELD
RICH MILLER
2150 DR. MARTIN LUTHER KING DRIVE
INDIANAPOLIS, INDIANA 46202
(317) 927-4684

SANITARY SEWER AND WATER
CITIZENS WESTFIELD
HARRY NIKIDES
2150 DR. MARTIN LUTHER KING DRIVE
INDIANAPOLIS, INDIANA 46202
(317) 927-4338

FIBER OPTIC
WESTFIELD IFN
BRUCE SPECK
5520 WEST 76TH STREET
INDIANAPOLIS, INDIANA 46268

PLANS PREPARED FOR:

TMC INDIANA 2, LLC
501 PENNSYLVANIA PKWY, SUITE 160
INDIANAPOLIS, IN 46280
PHONE: (317) 705-8800

PLANS PREPARED BY:

AMERICAN STRUCTUREPOINT INC.
7260 SHADELAND STATION
INDIANAPOLIS, IN 46256-3957
TEL 317.547.5580 FAX 317.543.0270
www.structurepoint.com

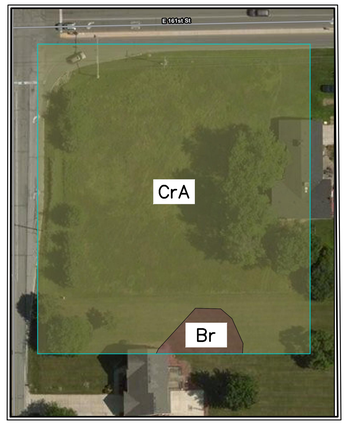

SOILS MAP
NOT TO SCALE

APPROVAL PENDING
NOT FOR CONSTRUCTION

JARED L. WILKERSON, P.E.

C001
JOB# 2007.01007

GENERAL NOTES

A. Design data provided in electronic format is for information purposes only and should be used at your own risk, and is provided without representations and warranties. Any conflict between the information reflected on the latest revision of the sealed plan sheets and that provided via electronic format shall be resolved in favor of the sealed plot sheets.

B. Utilities: There may be additional existing utilities not shown on these plans. Existing utilities are shown in an approximate manner only and the Engineer assumes no responsibility for locations shown. Field verify the location of all existing utilities within the limits of construction. Notify the Owner and Engineer if discrepancies are found that will affect the construction project. Protect all existing utilities.

C. Temporary Provisions: Sequence the work and provide temporary measures as needed to maintain access to the site through all entrances at all times during construction. Temporary provisions may include, but are not limited to: barricades, flashing lights, flagman, temporary pavement, and directional signage.

D. Equipment Storage: Do not park equipment or store materials in state, county, or city right-of-way.

E. Notify the Engineer in writing of any discrepancies between the existing conditions in the field and the survey shown on the plans before proceeding with any new construction.

F. Obtain all required construction related permits, including demolition permit, before starting work. Retain copies of all permits at the project site at all times.

G. Approval of these plans does not constitute approval of any land disturbing activities within wetland areas. Contact the appropriate regulatory agency for approval of any wetland area disturbance.

H. Signs (location, number, and size) are not approved under the general development permit. A separate permit is required for onsite signage.

I. No certificate of occupancy will be issued until all site improvements have been completed on the site.

J. Comply with all applicable state, federal, and local building and utility installation codes. All materials and construction methods shall be in accordance with these plans and specifications unless Department of Transportation Standards or local municipal standards are more stringent.

K. Do not deviate from these plans and specifications without prior written approval from the Engineer of record.

L. Work within D.O.T. right-of-way:

1. All pavement markings within D.O.T. right-of-way shall be thermoplastic and in accordance with D.O.T. specifications.
2. Re-establish all right-of-way area, which is damaged or disturbed, to original condition or better.
3. All work in D.O.T. right-of-way shall comply with D.O.T. specifications.

M. Arrange high intensity lighting to conceal the source of light from public view and prevent interference with traffic.

N. Ensure correct horizontal and vertical alignment of all ties between proposed and existing pavements, curb and gutter, sidewalks, walls, and utilities before beginning work. Notify Engineer if discrepancies exist.

TRAFFIC CONTROL

A. If Drawings do not indicate site specific traffic control measures, Contractor shall be responsible for providing a temporary traffic control plan in accordance with the Manual on Uniform Traffic Control Devices (MUTCD), latest edition.

B. All temporary traffic control signage and markings shall be installed prior to construction and maintained during construction in accordance with the MUTCD, latest edition.

C. Contact property owners to be affected by construction and coordinate temporary driveway closures and sequencing. Maintain access for all property owners during construction.

D. Control dust as necessary to prevent interference with traffic.

E. Inspect traffic control devices on a daily basis to ensure placement of barricades and function of lights is maintained throughout construction.

F. Coordinate all lane closures with the local jurisdiction having authority.

STRUCTURE & SITE DEMOLITION

A. Verify that utilities have been disconnected and capped before starting demolition operations.

B. Verify that hazardous materials have been remediated before proceeding with building demolition operations.

C. Environmental & Geotechnical: Review all project environmental and geotechnical reports and become familiar with all issues before demolition.

D. Existing Utilities: Locate, identify, disconnect, and seal or cap off indicated utilities serving buildings and structures to be demolished.

1. Arrange to shut off indicated utilities with utility companies.
2. If removal, relocation, or abandonment of utility services will affect adjacent occupied buildings, then provide temporary utilities that bypass buildings and structures to be demolished and that maintain continuity of service to other buildings and structures.

E. Do not commence demolition operations until temporary erosion and sediment control and plant-protection measures are in place.

F. Obtain the Demolition Permit from the local authority prior to starting demolition activities.

G. Existing Facilities: Protect adjacent walkways, loading docks, building entries, and other building facilities during demolition operations. Maintain exits from existing buildings. Promptly repair any facilities damaged by construction operations to owner's satisfaction at no additional cost to the owner.

H. Existing Utilities: Maintain utility services to remain and protect from damage during demolition operations.

I. Temporary Protection: Erect temporary protection, such as walks, fences, railings, canopies, and covered passageways, where required by authorities having jurisdiction and as indicated.

J. Remove temporary barriers and protections where hazards no longer exist. Where open excavations or other hazardous conditions remain, leave temporary barriers and protections in place.

K. Remove demolition waste materials from Project site and legally dispose of them in an EPA-approved landfill acceptable to authorities having jurisdiction.

L. Do not burn demolished materials unless special written permission is obtained from Owner and Engineer.

M. Clean adjacent structures and improvements of dust, dirt, and debris caused by building demolition operations. Return adjacent areas to condition existing before building demolition operations began.

SITE CLEARING

1.1 PROJECT CONDITIONS

A. Traffic: Minimize interference with adjoining roads, streets, walks, and other adjacent occupied or used facilities during site-clearing operations.

B. Environmental & Geotechnical: Review all project environmental and geotechnical reports and become familiar with all issues before site clearing.

C. Utility Locator Service: Notify utility locator service for area where Project is located before site clearing.

D. Do not commence site clearing operations until temporary erosion- and sedimentation-control and plant-protection measures are in place.

1.2 TEMPORARY EROSION AND SEDIMENTATION CONTROL

A. Provide temporary erosion- and sedimentation-control measures to prevent soil erosion and discharge of soil-bearing water runoff or airborne dust to adjacent properties and walkways, according to erosion- and sedimentation-control Drawings and requirements of authorities having jurisdiction.

B. Verify that flows of water redirected from construction areas or generated by construction activity do not enter or cross protection zones.

C. Inspect, maintain, and repair erosion- and sedimentation-control measures during construction until permanent vegetation has been established.

D. Remove erosion and sedimentation controls when site is stabilized and restore and stabilize areas disturbed during removal.

1.3 TREE AND PLANT PROTECTION

Repair or replace trees, shrubs, and other vegetation indicated to remain or be relocated that are damaged by construction operations, in a manner approved by Engineer.

1.4 EXISTING UTILITIES

A. Locate, identify, disconnect, and seal or cap utilities indicated to be removed or abandoned in place. Arrange with utility companies to shut off indicated utilities.

B. Interrupting Existing Utilities: Do not interrupt utilities serving facilities occupied by Owner or others unless permitted under the following conditions and then only after arranging to provide temporary utility services according to requirements indicated:

1. Notify utility owner not less than two days in advance of proposed utility interruptions.
2. Do not proceed with utility interruptions without utility owner's written permission.

C. Pothole existing water lines, underground electrical lines, gas lines, underground telephone lines, fiber optic, and any other existing utility lines within the project limits during site clearing and demolition activities. Survey the existing utility elevations and provide the surveyed field locations and depths to the Engineer for review. These existing utilities may require relocation.

1.5 CLEARING AND GRUBBING

Remove obstructions, concrete, asphalt, trees, shrubs, and other vegetation to permit installation of new construction.

1. Do not remove trees, shrubs, and other vegetation indicated to remain or to be relocated.
2. Grind down stumps and remove roots, obstructions, and debris to a depth of 12 inches below exposed subgrade.
3. Use only hand methods for grubbing within protection zones.
4. The subgrade to remain shall be compacted to 95% Standard Proctor maximum dry density following clearing and grubbing activities.

1.6 TOPSOIL STRIPPING

A. Remove sod and grass before stripping topsoil.

B. Strip topsoil in a manner to prevent intermingling with underlying subsoil or other waste materials.

C. Stockpile topsoil away from edge of excavations without intermixing with subsoil. Grade and shape stockpiles to drain surface water. Cover to prevent windblown dust and erosion by water.

D. Dispose of surplus topsoil. Surplus topsoil is that which exceeds quantity indicated to be stockpiled or reused.

SITE WATER DISTRIBUTION

Section 500 of the Town of Dyer Standard Specifications shall apply for all materials, installation, testing disinfection and inspection.

1.1 GENERAL

A. Regulatory Requirements:

1. Comply with requirements of utility company supplying water. Include tapping of water mains and backflow prevention.
2. Comply with standards of authorities having jurisdiction for potable-water-service piping, including materials, installation, testing, and disinfection.

B. Piping materials shall bear label, stamp, or other markings of specified testing agency.

C. Interruption of Existing Water-Distribution Service: Notify Owner at least 2 days prior to interruption of existing water services.

D. Coordinate with utility company for required inspections and for connection of water main and services before starting construction.

1.2 COPPER TUBE AND FITTINGS

A. Soft Copper Tube: ASTM B 88, Type K, water tube, annealed temper.
Copper, Pressure-Seal Fittings:

1. NPS 2 and Smaller: Wrought-copper fitting with EPDM O-ring seal in each end.
2. NPS 2-1/2 to NPS 4: Bronze fitting with stainless-steel grip ring and EPDM O-ring seal in each end.

B. Bronze Flanges: ASME B 16.24, Class 150, with solder-joint end. Furnish Class 300 flanges if required to match piping.

C. Copper Unions: MSS SP-123, cast-copper-alloy, hexagonal-stock body with ball-and-socket, metal-to-metal seating surfaces, and solder-joint or threaded ends.

1.3 DUCTILE-IRON PIPE AND FITTINGS

A. Mechanical-Joint, Ductile-Iron Pipe: AWWA C151, with mechanical-joint bell and plain spigot end unless grooved or flanged ends are indicated.

1. Mechanical-Joint, Ductile-Iron Fittings: AWWA C110, ductile- or gray-iron standard pattern or AWWA C153, ductile-iron compact pattern.
2. Glands, Gaskets, and Bolts: AWWA C111, ductile- or gray-iron glands, rubber gaskets, and steel bolts.

B. Push-on-Joint, Ductile-Iron Pipe: AWWA C151, with push-on-joint bell and plain spigot end unless grooved or flanged ends are indicated.

C. Flanges: ASME 16.1, Class 125, cast iron.

1.4 PVC PIPE AND FITTINGS

A. PVC, Schedule 40 Pipe: ASTM D 1785. PVC, Schedule 40 Socket Fittings: ASTM D 2466.

B. PVC, AWWA Pipe: AWWA C900, Class 200, with bell end with gasket, and with spigot end.

C. Mechanical-Joint, Ductile-Iron Fittings: AWWA C110, ductile- or gray-iron standard pattern or AWWA C153, ductile-iron compact pattern.

1.5 GATE VALVES

AWWA, Cast-Iron Gate Valves: Nonrising-Stem, Resilient-Seated Gate Valves: Gray- or ductile-iron body and bonnet; with bronze or gray- or ductile-iron gate, resilient seats, bronze stem, and stem nut.

1) Standard: AWWA C509.
2) Minimum Pressure Rating: 200 psig.
3) End Connections: Mechanical joint.
4) Interior Coating: Complying with AWWA C550.

1.6 GATE VALVE ACCESSORIES AND SPECIALTIES

A. Tapping-Sleeve Assemblies: Sleeve and valve compatible with drilling machine.

1) Standard: MSS SP-60.
2) Tapping Sleeve: Cast- or ductile-iron or stainless-steel, two-piece bolted sleeve with flanged outlet for new branch connection. Include sleeve matching size and type of pipe material being tapped and with recessed flange for branch valve.
3) Valve: AWWA, cast-iron, nonrising-stem, resilient-seated gate valve with one raised face flange mating tapping-sleeve flange.

B. Valve Boxes: Comply with AWWA M44 for cast-iron valve boxes. Include top section, adjustable extension of length required for depth of burial of valve, plug with lettering "WATER," and bottom section with base that fits over valve and with a barrel approximately 5 inches in diameter.

1.7 BACKFLOW PREVENTERS

Double-Check, Detector-Assembly Backflow Preventers:

1. Standards: ASSE 1048 and UL listed or FMG approved.
2. Operation: Continuous-pressure applications.
3. Pressure Loss: 5 psig maximum, through middle 1/3 of flow range.
4. Body: Cast iron with interior lining complying with AWWA C550 or that is FDA approved.
5. End Connections: Flanged.
6. Configuration: Designed for horizontal, straight through flow.

1.8 WATER METER BOXES

Description: Cast-iron body and cover for disc-type water meter, with lettering "WATER METER" in cover; and with slotted, open-bottom base section of length to fit over service piping.

1.9 CONCRETE VAULTS

Description: Precast, reinforced-concrete vault, designed for A-16 load designation according to ASTM C 857 and made according to ASTM C 858.

1. Ladder: ASTM A 36/A 36M, steel or polyethylene-encased steel steps.
2. Manhole: ASTM A 48/A 48M Class No. 35A minimum tensile strength, gray-iron traffic frame and cover.
   a. Dimension: 24-inch minimum diameter, unless otherwise indicated.
3. Drain: ASME A112.6.3, cast-iron floor drain with outlet of size indicated. Include body anchor flange, light-duty cast-iron grate, bottom outlet, and integral or field-installed bronze ball or clapper-type backwater valve.

1.10 FIRE HYDRANTS

Dry-Barrel Fire Hydrants: Freestanding, with one NPS 4-1/2 and two NPS 2-1/2 outlets, 5-1/4-inch main valve, drain valve, and NPS 6 mechanical-joint inlet. Include interior coating according to AWWA C550. Hydrant shall have cast-iron body, compression-type valve opening against pressure and closing with pressure.

1. Standard: AWWA C502.
2. Pressure Rating: 250 psig.

1.11 FIRE DEPARTMENT CONNECTIONS

Fire Department Connections: Freestanding, with cast-bronze body, thread inlets according to NFPA 1963 and matching local fire department hose threads, and threaded bottom outlet. Include lugged caps, gaskets, and chains; lugged swivel connection and drop clapper for each hose-connection inlet; 18-inch-high brass sleeve; and round escutcheon plate.

1.12 VALVE APPLICATIONS

Drawings indicate valve types to be used. Where specific valve types are not indicated, the following requirements apply:

1. Underground Valves, NPS 3 and Larger: AWWA, cast-iron, nonrising-stem, resilient-seated gate valves with valve box.
2. Use the following for valves in vaults and aboveground:
   a. Gate Valves, NPS 2 and Smaller: Bronze, nonrising stem.
   b. Gate Valves, NPS 3 and Larger: AWWA, cast iron, OS&Y rising stem, resilient seated.
   c. Check Valves: AWWA C508, swing type.

1.13 FIELD QUALITY CONTROL

A. Piping Tests: Conduct piping tests before joints are covered and after concrete thrust blocks have hardened sufficiently. Fill pipeline 24 hours before testing and apply test pressure to stabilize system. Use only potable water.

B. Hydrostatic Tests: Test at not less than one-and-one-half times working pressure for two hours. Increase pressure in 50-psig increments and inspect each joint between increments. Hold at test pressure for 1 hour; decrease to 0 psig. Slowly increase again to test pressure and hold for 1 more hour. Maximum allowable leakage is 2 quarts per hour per 100 joints. Remake leaking joints with new materials and repeat test until leakage is within allowed limits.

C. Disinfection: Clean and disinfect potable water mains as directed by the local authority, or, if method is not prescribed by the local authority, use procedure described in AWWA C651.

D. Prepare reports of testing activities and submit to the Engineer for approval.

1.14 IDENTIFICATION

Install continuous underground detectable warning tape during backfilling of trench for underground water-distribution piping. Locate below finished grade, directly over piping.

SITE SANITARY SEWERS

All sanitary sewer construction and testing shall conform to Town of Dyer Standard Specifications.

1.1 PROJECT CONDITIONS

A. Interruption of Existing Sanitary Sewerage Service: Coordinate as required with the local sanitary sewer authority before starting construction.

B. Utility Locator Service: Notify utility locator service for area where Project is located before beginning sanitary sewer installation operations. Field verify all existing utilities shown on the Drawings by pot-holing the lines. Survey existing utilities and provide horizontal and vertical location information to the Engineer to determine if any utilities will conflict with the proposed design.

1.2 DUCTILE-IRON, GRAVITY SEWER PIPE AND FITTINGS

A. Pipe: ASA A-21.52, CL 52 minimum, for push-on joints.

B. Compact Fittings: AWWA C153, ductile iron, for push-on joints.

C. Gaskets: AWWA C111, rubber.

1.3 PVC PIPE AND FITTINGS

PVC Gravity Sewer Piping: ASTM D-3034 SDR 26 minimum, per DDS Section 301. PVC gravity sewer pipe with bell-and-spigot ends and with integral ASTM F 477, elastomeric seals for gasketed joints.

1.4 CLEANOUTS

A. Cast-Iron Cleanouts:

1. Description: ASME A112.36.2M, round, gray-iron housing with clamping device and round, secured, scoriated, gray-iron cover. Include gray-iron ferrule with inside calk or spigot connection and countersunk, tapered-thread, brass closure plug.
2. Top-Loading Classification: Traffic rated, Heavy Duty, in all paved areas and areas subject to vehicular traffic.
3. Sewer Pipe Fitting and Riser to Cleanout: ASTM A 74, Service class, cast-iron soil pipe and fittings.

B. PVC Cleanouts: PVC body with PVC threaded plug. Include PVC sewer pipe fitting and riser to cleanout of same material as sewer piping. Use in Light Duty applications where there is pedestrian traffic only or in landscaped areas.

1.5 MANHOLES

A. Standard Precast Concrete Manholes:

1. Description: ASTM C 478, precast, reinforced concrete, of depth indicated, with provision for sealant joints.
2. Diameter: 48 inches minimum unless otherwise indicated.
3. Ballast: Increase thickness of precast concrete sections or add concrete to base section, as required to prevent flotation.
4. Base Section: 6-inch minimum thickness for floor slab and 4-inch minimum thickness for walls and base riser section, with separate base slab or base section with integral floor.
5. Riser Sections: 4-inch minimum thickness, of length to provide depth indicated.
6. Top Section: Eccentric-cone type unless concentric-cone or flat-slab-top type is indicated; with top of cone of size that matches grade rings.
7. Joint Sealant: ASTM C 990, bitumen or butyl rubber.
8. Resilient Pipe Connectors: ASTM C 923, cast or fitted into manhole walls, for each pipe connection.
9. Steps: Individual FRP steps or FRP ladder; wide enough to allow worker to place both feet on one step and designed to prevent lateral slippage off step. Cast or anchor steps into sidewalls at 12- to 16-inch intervals. Omit steps if total depth from floor of manhole to finished grade is less than 48 inches.
10. Adjusting Rings: Interlocking HDPE rings, with level or sloped edge in thickness and diameter matching manhole frame and cover, and with height as required to adjust manhole frame and cover to indicated elevation and slope. Include sealant recommended by ring manufacturer.
11. Grade Rings: Reinforced-concrete rings, 6- to 9-inch total thickness, with diameter matching manhole frame and cover, and with height as required to adjust manhole frame and cover to indicated elevation and slope.

B. Manhole Frames and Covers:

1. Description: Ferrous; 24-inch ID by 7- to 9-inch riser, with 4-inch-minimum-width flange and 26-inch-diameter cover. Include indented top design with lettering cast into cover, using wording equivalent to "SANITARY SEWER."
2. Material: ASTM A 536, Grade 60-40-18 ductile iron unless otherwise indicated.

1.6 IDENTIFICATION

1. Use warning tape or detectable warning tape over ferrous piping.
2. Provide metallic tracer wire on PVC pipe for future location purposes, per DDS Section 303.0, use detectable warning tape over edges of underground manholes.

1.7 FIELD QUALITY CONTROL

A. Inspect interior of piping to determine whether line displacement or other damage has occurred. Inspect after approximately 24 inches of backfill is in place, and again at completion of Project.

1. Defects requiring correction include the following:
   a. Alignment: Less than full diameter of inside of pipe is visible between structures.
   b. Deflection: Flexible piping with deflection that prevents passage of ball or cylinder of size not less than 92.5 percent of piping diameter.
   c. Damage: Crushed, broken, cracked, or otherwise damaged piping.
   d. Infiltration: Water leakage into piping.
   e. Exfiltration: Water leakage from or around piping.
2. Replace defective piping using new materials, and repeat inspections until defects are within allowances specified.
3. Reinspect and repeat procedure until results are satisfactory.

B. Test new piping systems, and parts of existing systems that have been altered, extended, or repaired, for leaks and defects.

1. Do not enclose, cover, or put into service before inspection and approval.
2. Test completed piping systems according to requirements of authorities having jurisdiction.
3. Schedule tests and inspections by authorities having jurisdiction with at least 24 hours advance notice.
4. Submit a separate report for each test to the Engineer for approval.
5. Air Tests: Test sanitary sewerage according to requirements of authorities having jurisdiction, UNI-B-6, and the following:
   a. Test plastic gravity sewer piping according to ASTM F 1417.
6. Manholes: Perform hydraulic test according to ASTM C 969.

C. Leaks and loss in test pressure constitute defects that must be repaired.

D. Replace leaking piping using new materials, and repeat testing until leakage is within allowances specified.

SITE STORM UTILITY DRAINAGE PIPING

1.1 PIPE AND FITTINGS-GENERAL

1. All stormwater pipe, inlets, headwalls, and related appurtenances shall meet local D.O.T. standards.
2. All stormwater pipe shall be installed in accordance with pipe manufacturers instructions.

1.2 STEEL PIPE AND FITTINGS

Corrugated-Steel Pipe and Fittings: ASTM A 760/A 760M, Type I with fittings of similar form and construction as pipe.

1. Standard-Joint Bands: Corrugated steel.
2. Coating: Aluminum or Bituminous.

1.3 PE PIPE AND FITTINGS

1. Corrugated PE Drainage Pipe and Fittings NPS 3 to NPS 10: AASHTO M 252M; NPS 12 to NPS 48: AASHTO M 294M Type S, with smooth waterway for coupling joints.
2. Silltight Couplings: PE sleeve with ASTM D 1056, Type 2, Class A, Grade 2 gasket material that mates with tube and fittings.

1.4 PVC CORRUGATED PIPE AND FITTINGS

Corrugated PVC Drainage Pipe and Fittings NPS 4 to NPS 36: Smooth interior, ASTM F949, 46 PSI stiffness when tested in accordance with ASTM D2412. PVC compound having a minimum cell classification of 12454 as defined in ASTM D1784. Fittings: Smooth interior, ASTM F949, Section 5.2.3 or F794, Section 7.2.4. Joints shall be made with integrally-formed bell and spigot gasketed connections. Manufacturer shall provide documentation showing no leakage when gasketed pipe joints are tested in accordance with ASTM D3212. Elastomeric seals (gaskets) shall meet ASTM F477.

1.5 CONCRETE PIPE AND FITTINGS

1. Reinforced-Concrete Sewer Pipe and Fittings: ASTM C 76. Bell-and-spigot or tongue-and- groove ends and gasketed joints with ASTM C 443, rubber gaskets or sealant joints with ASTM C 990, bitumen or butyl-rubber sealant. Class III, Wall B.
2. Cast-Iron Area Drains: ASME A112.6.3 gray-iron round body with anchor flange and round grate. Include bottom outlet with inside calk or spigot connection, of sizes indicated.

1.6 MANHOLES

A. Standard Precast Concrete Manholes:

1. Description: ASTM C 478, precast, reinforced concrete, of depth indicated, with provision for sealant joints.
2. Diameter: 48 inches minimum unless otherwise indicated.
3. Ballast: Increase thickness of precast concrete sections or add concrete to base section as required to prevent flotation.
4. Base Section: 6-inch minimum thickness for floor slab and 4-inch minimum thickness for walls and base riser section, and separate base slab or base section with integral floor.
5. Riser Sections: 4-inch minimum thickness, and lengths to provide depth indicated.
6. Top Section: Eccentric-cone type unless concentric-cone or flat-slab-top type is indicated, and top of cone of size that matches grade rings.
7. Joint Sealant ASTM C 990, bitumen or butyl rubber.
8. Steps: Individual FRP steps or FRP ladder, wide enough to allow worker to place both feet on one step and designed to prevent lateral slippage off step. Cast or anchor steps into sidewalls at 12- to 16-inch intervals. Omit steps if total depth from floor of manhole to finished grade is less than 48 inches.

B. Manhole Frames and Covers:

1. Description: Ferrous; 24-inch ID by 7- to 9-inch riser with 4-inch-minimum-width flange and 26-inch-diameter cover. Include indented top design with lettering cast into cover, using wording equivalent to "STORM SEWER."
2. Material: ASTM A 536, Grade 60-40-18 ductile iron unless otherwise indicated.

1.7 INLET & JUNCTION BOXES

Standard Precast Concrete:

1. Description: ASTM C 478, precast, reinforced concrete, of depth indicated, with provision for sealant joints.
2. Base Section: 6-inch minimum thickness for floor slab and 4-inch minimum thickness for walls and base riser section, and separate base slab or base section with integral floor.
3. Riser Sections: 4-inch minimum thickness, 48-inch diameter, and lengths to provide depth indicated.
4. Top Section: Eccentric-cone type unless concentric-cone or flat-slab-top type is indicated. Top of cone of size that matches grade rings.
5. Joint Sealant: ASTM C 990, bitumen or butyl rubber.
6. Steps: Individual FRP steps or FRP ladder, wide enough to allow worker to place both feet on one step and designed to prevent lateral slippage off step. Cast or anchor steps into sidewalls at 12- to 16-inch intervals. Omit steps if total depth from floor of catch basin to finished grade is less than 48 inches.
7. Pipe Connectors: ASTM C 923, resilient, of size required, for each pipe connecting to base section.

1.8 STORMWATER DETENTION STRUCTURES

A. Cast-in-Place Concrete, Stormwater Detention Structures: Constructed of reinforced-concrete bottom, walls, and top; designed according to ASTM C 890 for A-16 (AASHTO HS20-44), heavy-traffic, structural loading; of depth, shape, dimensions, and appurtenances indicated.

1. Ballast: Increase thickness of concrete as required to prevent flotation.
2. Grade Rings: Include two or three reinforced-concrete rings, of 6- to 9-inch total thickness, that match 24-inch-diameter frame and cover.
3. Steps: Individual FRP steps or FRP ladder, wide enough to allow worker to place both feet on one step and designed to prevent lateral slippage off step. Cast or anchor steps into sidewalls at 12- to 16-inch intervals. Omit steps if total depth from floor of structure to finished grade is less than 48 inches.
4. Form and cast wiers and pipe openings as indicated on Drawings.

B. Manhole Frames and Covers: ASTM A 536, Grade 60-40-18, ductile-iron castings designed for heavy-duty service.

1.9 PIPE OUTLETS

A. Pre-Cast Head Walls: Pre-Cast reinforced concrete, with apron and tapered sides.

B. Slope Paved Head Walls: cast-in-place reinforced concrete as shown on Drawings.

C. Riprap Basins: Broken, irregularly sized and shaped, graded stone according to NSSGA's "Quarried Stone for Erosion and Sediment Control." Minimum stone size and dimensions as shown on Drawings.

1.10 PIPING INSTALLATION

A. Install locator wire or tape 6-inches above all non-metallic piping.

B. Install bedding and backfill in accordance with pipe manufacturers instructions.

C. Begin installation at downstream piping connection to outfall point.

NOTE:
CONTRACTOR TO FOLLOW THE MORE STRINGENT OF EITHER THE CITY SPECIFICATIONS OR THE SPECIFICATIONS SHOWN HEREIN. MATERIAL TYPES, PARTS SUCH AS VALVES, HYDRANTS, ETC. MUST FOLLOW CITY UTILITY REQUIREMENTS.

CVS pharmacy

12,900 TYPE-A
CHAMFER DRIVE-THRU

STORE NUMBER: 10591
161ST STREET AND SPRING MILL ROAD
WESTFIELD, INDIANA

PROJECT TYPE: NEW STORE
DEAL TYPE:
CS PROJECT NUMBER: 071776

ARCHITECT OF RECORD

CONSULTANT:

AMERICAN STRUCTUREPOINT INC.
7260 SHADELAND STATION
INDIANAPOLIS, INDIANA 46256
p:(317) 547-5580 f:(317) 543-0270
www.structurepoint.com

DEVELOPER:

TMC Indiana 2, LLC
501 Pennsylvania Pkwy.
Suite 160
Indianapolis, Indiana 46280
Phone (317) 705-8800
Contact: Craig Forgey

SEAL:

APPROVAL PENDING
NOT FOR CONSTRUCTION

REVISIONS:

1	TAC COMMENTS	07-10-2015

PLANNING MGR:	JLW
DRAWING BY:	RCB
DATE:	05-29-2015
JOB NUMBER:	2007.01007

TITLE: CIVIL SPECIFICATIONS

SHEET NUMBER: C002

COMMENTS:

PRINT DATE: 7/15/15
PLOT SCALE: 1:2.5849 EDIT DATE: 6/2/15 - 8:22 AM EDITED BY: RBERGER DRAWING FILE: P:\IN2007\1007\D. DRAWINGS\CIVIL\C. CONSTRUCTION DOCUMENTS\20070107 CE.C002-C003.SPEC.DWG

D. Construct all headwalls flush with existing and proposed embankment slopes.

1.11 CLEANING

A. Clean interior of piping of dirt and superfluous materials. Flush with potable water.

B. Clean accumulated sediment from stormwater pipes, conveyance channels, and pond once site is stabilized with vegetation.

EARTH MOVING

1.1 PROJECT CONDITIONS

A. Utility Locator Service: Notify utility locator service for area where Project is located before beginning earth moving operations.

B. Do not commence earth moving operations until temporary erosion- and sedimentation-control measures are in place.

C. Do not commence earth moving operations until plant-protection measures are in place.

D. Do not commence earth moving operations without reviewing and making provisions for all Geotechnical recommendations made in the project Geotechnical Report. Comply with recommendations in the geotechnical report regarding general site preparation, building pad preparation, pavement sections, fill, and excavation.

E. Retain a copy of the project Geotechnical Report at the work site at all times. Any discrepancies between these specifications and the project Geotechnical Report shall be resolved in favor of the project Geotechnical Report.

F. Protect structures, utilities, sidewalks, pavements, and other facilities from damage caused by settlement, lateral movement, undermining, washout, and other hazards created by earth moving operations.

G. Protect and maintain erosion and sedimentation controls during earth moving operations.

1.2 DEWATERING

A. Prevent surface water and ground water from entering excavations, from ponding on prepared subgrades, and from flooding Project site and surrounding area.

B. Protect subgrades from softening, undermining, washout, and damage by rain or water accumulation.

C. Design and provide dewatering system using accepted and professional methods consistent with current industry practice. Provide dewatering system of sufficient size and capacity to control groundwater in a manner that preserves strength of foundation soils, does not cause instability or raveling of excavation slopes, and does not result in damage to existing structures. Lower water level in advance of excavation by utilizing wells, wellpoints, or similar positive control methods. Maintain the groundwater level to a minimum of two (2) feet below excavations. Provide piezometers as directed by the Engineer to document that the groundwater level is being maintained.

D. By acceptable means, contractor shall control all water regardless of source and is responsible for proper disposal of the water. No additional payment will be made for any supplemental measures to control seepage, groundwater, or artesian head.

E. Open pumping with sumps and ditches shall be allowed, provided it does not result in boils, loss of fines, softening of the ground, or instability of slopes. Sumps shall be located outside of load bearing areas so the bearing surfaces will not be disturbed. Water containing silt in suspension shall not be pumped into sewer lines or adjacent water bodies. During normal pumping and upon development of well(s), levels of fine sand or silt in the discharge of water shall not exceed five (5) ppm.

F. Continuously maintain excavations in a dry condition with positive dewatering methods during preparation of subgrade, installation of pipe, and construction of structures until the critical period of construction and/or backfill is completed to prevent damage of subgrade support, piping, structure, side slopes, or adjacent facilities for flotation or other hydrostatic pressure imbalance.

G. When construction is complete, properly remove all dewatering equipment from the site, including wells and related temporary electrical service.

1.3 SUBGRADE

A. Notify Project Geotechnical Engineer when excavations have reached required subgrade.

B. If Project Geotechnical Engineer determines that unsatisfactory soil is present, continue excavation and replace with compacted backfill or fill material as directed.

C. Proof-roll subgrade below the building slabs and pavements with a pneumatic-tired and loaded 10-wheel, tandem-axle dump truck weighing not less than 15 tons to identify soft pockets and areas of excess yielding. Do not proof-roll wet or saturated subgrades. Excavate soft spots, unsatisfactory soils, and areas of excessive pumping or rutting, as determined by Project Geotechnical Engineer, and replace with compacted backfill or fill as directed.

D. In heavy duty pavement areas, the gravel aggregate base shall be extended under the curb and gutter section to provide additional stability for truck travel.

1.4 UTILITY TRENCH BEDDING AND BACKFILL

A. Place and compact bedding course on trench bottoms and where indicated. Shape bedding course to provide continuous support for bells, joints, and barrels of pipes and for joints, fittings, and bodies of conduits.

B. Use Class B bedding under all PVC piping.

C. Carefully compact initial backfill under pipe haunches and compact evenly up on both sides and along the full length of piping or conduit to avoid damage or displacement of piping or conduit.

D. Backfill all utilities under roadways and traffic areas with crushed stone.

1.5 COMPACTION OF SOIL BACKFILLS AND FILLS

A. Place backfill and fill soil materials in layers not more than 8 inches in loose depth for material compacted by heavy compaction equipment, and not more than 4 inches in loose depth for material compacted by hand-operated tampers.

B. Place backfill and fill soil materials evenly on all sides of structures to required elevations, and uniformly along the full length of each structure. Compact soil materials as indicated on drawings or as indicated in the project Geotechnical Report.

C. Provide construction phase monitoring and testing as recommended in the project Geotechnical Report. Provide test reports to the Engineer for review and approval.

1.6 GRADING

A. General: Uniformly grade areas to a smooth surface, free of irregular surface changes. Comply with compaction requirements and grade to cross sections, lines, and elevations indicated.

1. Provide a smooth transition between adjacent existing grades and new grades.
2. Cut out soft spots, fill low spots, and trim high spots to comply with required surface tolerances.

B. Landscape Islands: Fill all curbed islands to top of curb with topsoil and apply seed and mulch unless drawings indicate otherwise.

C. Slopes: Do not create cut or fill slopes steeper than 2h:lv without obtaining special written permission from the Engineer of Record and project Geotechnical Engineer.

1.7 PROTECTION

Protecting Graded Areas: Protect newly graded areas from traffic, freezing, and erosion. Keep free of trash and debris. See erosion and sediment control plan and notes for further information.

ASPHALT PAVING

1.1 FIELD CONDITIONS

Environmental Limitations: Do not apply asphalt materials if subgrade is wet or excessively damp, if rain is imminent or expected before time required for adequate cure, or if the following conditions are not met:

1. Prime Coat: Minimum surface temperature of 60 deg F.
2. Tack Coat: Minimum surface temperature of 60 deg F.
3. Slurry Coat: Comply with weather limitations in ASTM D 3910.
4. Asphalt Base Course: Minimum surface temperature of 40 deg F and rising at time of placement.
5. Asphalt Surface Course: Minimum surface temperature of 60 deg F at time of placement.

1.2 ASPHALT MATERIALS

A. Refer to Project Geotechnical Report and project drawings for required asphalt material design.

B. Aggregates shall meet the requirements of the local Department of Transportation.

C. Reclaimed Asphalt Pavement (RAP) shall not be used in the mix design.

1.3 PATCHING

A. Asphalt Pavement: Sawcut perimeter of patch and excavate existing pavement section to sound base. Excavate rectangular or trapezoidal patches, extending 12 inches into perimeter of adjacent sound pavement, unless otherwise indicated. Cut excavation faces vertically. Remove excavated material. Recompact existing unbound-aggregate base course to form new subgrade.

B. Tack Coat: Before placing patch material, apply tack coat uniformly to vertical asphalt surfaces abutting the patch. Apply at a rate of 0.05 to 0.15 gal./sq. yd.

1. Allow tack coat to cure undisturbed before applying hot-mix asphalt paving.
2. Avoid smearing or staining adjoining surfaces, appurtenances, and surroundings. Remove spillages and clean affected surfaces.

C. Placing Patch Material: Fill excavated pavement areas with hot-mix asphalt base mix for full thickness of patch and, while still hot, compact flush with adjacent surface.

1.4 SURFACE PREPARATION

A. General: Immediately before placing asphalt materials, remove loose and deleterious material from substrate surfaces. Ensure that prepared subgrade is ready to receive paving. Sawcut existing pavement to the joined to provide vertical faces between new and existing surfaces.

B. Emulsified Asphalt Prime Coat: Apply uniformly over surface of compacted unbound-aggregate base course at a rate of 0.10 to 0.30 gal./sq. yd. per inch depth. Apply enough material to penetrate and seal, but not flood, surface. Allow prime coat to cure.

1. If prime coat is not entirely absorbed within 24 hours after application, spread sand over surface to blot excess asphalt. Use enough sand to prevent pickup under traffic. Remove loose sand by sweeping before pavement is placed and after volatiles have evaporated.
2. Protect primed substrate from damage until ready to receive paving.

C. Tack Coat: Apply uniformly to surfaces of existing pavement at a rate of 0.02 to 0.08 gal./sq. yd.

1. Allow tack coat to cure undisturbed before applying hot-mix asphalt paving.
2. Avoid smearing or staining adjoining surfaces, appurtenances, and surroundings. Remove spillages and clean affected surfaces.

1.5 PLACING HOT-MIX ASPHALT

A. Machine place hot-mix asphalt on prepared surface, spread uniformly, and strike off. Place asphalt mix by hand in areas inaccessible to equipment in a manner that prevents segregation of mix. Place each course to required grade, cross section, and thickness when compacted.

1. Place hot-mix asphalt base course in number of lifts and thicknesses indicated.
2. Place hot-mix asphalt surface course in single lift.
3. Spread mix at a minimum temperature of 250 deg F.
4. Begin applying mix along centerline of crown for crowned sections and on high side of one-way slopes unless otherwise indicated.
5. Regulate paver machine speed to obtain smooth, continuous surface free of pulls and tears in asphalt-paving mat.

B. Place paving in consecutive strips not less than 10 feet wide unless infill edge strips of a lesser width are required.

1.6 JOINTS

A. Construct joints to ensure a continuous bond between adjoining paving sections. Construct joints free of depressions, with same texture and smoothness as other sections of hot-mix asphalt course.

B. Construct smooth transitions between new and existing paving sections.

1.7 COMPACTION

A. General: Begin compaction as soon as placed hot-mix paving will bear roller weight without excessive displacement. Compact hot-mix paving with hot, hand tampers or with vibratory-plate compactors in areas inaccessible to rollers. Complete compaction before mix temperature cools to 185 deg F.

1. Initial Lift: Average of 92% of maximum theoretical density.
2. Top Surface Lift: Average of 93% of maximum theoretical density.
3. Tolerance: +2.0%, -1.0% of any individual test.

B. Finish Rolling: Finish roll paved surfaces to remove roller marks while hot-mix asphalt is still warm.

C. Erect barricades to protect paving from traffic for at least 24 hours after placement for the binder course, and at least 72 hours after placement for the final wearing surface.

D. If the ambient air temperature is in excess of 90 degrees Fahrenheit during the 72 hour protection period, the pavement surface shall be flooded with water to rapidly cool the pavement at least once per day.

1.8 FIELD QUALITY CONTROL

A. Testing Agency: Engage a qualified testing agency to perform tests and inspections.

B. Conduct tests and reports specified in the project Geotechnical Report.

C. Testing agency must inspect and approve the subgrade, each fill layer, and the subbase and base course.

D. Promptly send test reports to the Engineer for review and approval.

E. Remove and replace or install additional hot-mix asphalt where test results or measurements indicate that it does not comply with specified requirements.

CONCRETE PAVING

1.1 PROJECT CONDITIONS

Traffic Control: Maintain access for vehicular and pedestrian traffic as required for other construction activities.

1.2 STEEL REINFORCEMENT

A. Plain-Steel Welded Wire Reinforcement: ASTM A 185/A 185M, fabricated from as-drawn steel wire into flat sheets.

B. Reinforcing Bars: ASTM A 615/A 615M, Grade 60; deformed.

C. Joint Dowel Bars: ASTM A 615/A 615M, Grade 60 plain-steel bars. Cut bars true to length with ends square and free of burrs.

D. Bar Supports: Bolsters, chairs, spacers, and other devices for spacing, supporting, and fastening reinforcing bars, welded wire reinforcement, and dowels in place. Manufacture bar supports according to CRSI's "Manual of Standard Practice" from steel wire, plastic, or precast concrete of greater compressive strength than concrete specified, and as follows:

1.3 CONCRETE MATERIALS

A. Cementitious Material: Use cementitious materials, of same type, brand, and source throughout Project.

B. Normal-Weight Aggregates: ASTM C 33, uniformly graded. Provide aggregates from a single source.

1. Maximum Coarse-Aggregate Size: 1 inch nominal.
2. Fine Aggregate: Free of materials with deleterious reactivity to alkali in cement.

1.4 RELATED MATERIALS

Joint Fillers: ASTM D 1751, asphalt-saturated cellulosic fiber in preformed strips.

1.5 WHEEL STOPS

Wheel Stops: Precast, air-entrained concrete, 2500-psi minimum compressive strength. Provide chamfered corners and drainage slots on underside and holes for anchoring to substrate.

1.6 SIDEWALKS

Sidewalks: Slope sidewalks away from building with a 2% cross-slope unless Drawings indicate otherwise.

1.7 PREPARATION

Remove loose material from compacted subbase surface immediately before placing concrete.

1.8 STEEL REINFORCEMENT

A. General: Comply with CRSI's "Manual of Standard Practice" for fabricating, placing, and supporting reinforcement.

B. Clean reinforcement of loose rust and mill scale, earth, ice, or other bond-reducing materials.

C. Arrange, space, and securely tie bars and bar supports to hold reinforcement in position during concrete placement. Maintain minimum cover to reinforcement.

D. Install welded wire reinforcement in lengths as long as practicable. Lap adjoining pieces at least one full mesh, and lace splices with wire. Offset laps of adjoining widths to prevent continuous laps in either direction.

E. Zinc-Coated Reinforcement: Use galvanized-steel wire ties to fasten zinc-coated reinforcement. Repair cut and damaged zinc coatings with zinc repair material.

1.9 JOINTS

A. General: Form construction, isolation, and contraction joints and tool edges true to line, with faces perpendicular to surface plane of concrete. Construct transverse joints at right angles to centerline unless otherwise indicated.

1. When joining existing paving, place transverse joints to align with previously placed joints unless otherwise indicated.
2. Ensure forms provide correct horizontal and vertical alignment between new and existing pavements, sidewalks, curb and gutter, etc.

B. Construction Joints: Set construction joints at side and end terminations of paving and at locations where paving operations are stopped for more than one-half hour unless paving terminates at isolation joints.

1. Continue steel reinforcement across construction joints unless otherwise indicated. Do not continue reinforcement through sides of paving strips unless otherwise indicated.
2. Provide tie bars at sides of paving strips where indicated.
3. Keyed Joints: Provide preformed keyway-section forms or bulkhead forms with keys unless otherwise indicated. Embed keys at least 1-1/2 inches into concrete.
4. Doweled Joints: Install dowel bars and support assemblies at joints where indicated. Lubricate or coat with asphalt one-half of dowel length to prevent concrete bonding to one side of joint.

C. Isolation Joints: Form isolation joints of preformed joint-filler strips abutting concrete curbs, catch basins, manholes, inlets, structures, other fixed objects, and where indicated.

1. Locate expansion joints at intervals of 30 feet unless otherwise indicated.
2. Extend joint fillers full width and depth of joint.
3. Terminate joint filler not less than 1/2 inch or more than 1 inch below finished surface if joint sealant is indicated.
4. Place top of joint filler flush with finished concrete surface if joint sealant is not indicated.
5. Furnish joint fillers in one-piece lengths. Where more than one length is required, lace or clip joint-filler sections together.
6. During concrete placement, protect top edge of joint filler with metal, plastic, or other temporary preformed cap. Remove protective cap after concrete has been placed on both sides of joint.

D. Contraction Joints: Form weakened-plane contraction joints, sectioning concrete into areas as indicated. Construct contraction joints for a depth equal to at least one-fourth of the concrete thickness, as follows:

1. Grooved Joints: Form contraction joints after initial floating by grooving and finishing each edge of joint with grooving tool to a 1/4-inch radius. Repeat grooving of contraction joints after applying surface finishes. Eliminate grooving-tool marks on concrete surfaces.
2. Sawed Joints: Form contraction joints with power saws equipped with shatterproof abrasive or diamond-rimmed blades. Cut 1/8-inch-wide joints into concrete when cutting action will not tear, abrade, or otherwise damage surface and before developing random contraction cracks.
3. Doweled Contraction Joints: Install dowel bars and support assemblies at joints where indicated. Lubricate or coat with asphalt one-half of dowel length to prevent concrete bonding to one side of joint.

E. Edging: After initial floating, tool edges of paving, gutters, curbs, and joints in concrete with an edging tool to a 1/4-inch radius. Repeat tooling of edges after applying surface finishes. Eliminate edging-tool marks on concrete surfaces.

1.10 FIELD QUALITY CONTROL

A. Testing Agency: Engage a qualified testing agency to perform tests and inspections.

B. Promptly send test reports to the Engineer for review and approval.

C. Testing Services: Testing of composite samples of fresh concrete obtained according to ASTM C 172 shall be performed by the General Contractor's testing agency according to the following requirements:

1. Testing Frequency: Obtain at least one composite sample for each 100 cu. yd. or fraction thereof of each concrete mixture placed each day. When frequency of testing will provide fewer than five compressive-strength tests for each concrete mixture, testing shall be conducted from at least five randomly selected batches or from each batch if fewer than five are used.
2. Slump: ASTM C 143/C 143M; one test at point of placement for each composite sample, but not less than one test for each day's pour of each concrete mixture. Perform additional tests when concrete consistency appears to change.
3. Air Content: ASTM C 231, pressure method; one test for each composite sample, but not less than one test for each day's pour of each concrete mixture.
4. Concrete Temperature: ASTM C 1064/C 1064M; one test hourly when air temperature is 40 deg F and below and when it is 80 deg F and above, and one test for each composite sample.
5. Compression Test Specimens: ASTM C 31/C 31M; cast and laboratory cure one set of three standard cylinder specimens for each composite sample.
6. Compressive-Strength Tests: ASTM C 39/C 39M; test one specimen at seven days and two specimens at 28 days. A compressive-strength test shall be the average compressive strength from two specimens obtained from same composite sample and tested at 28 days.

D. Strength of each concrete mixture will be satisfactory if average of any three consecutive compressive-strength tests equals or exceeds specified compressive strength and no compressive-strength test value falls below specified compressive strength by more than 500 psi.

E. Test results shall be reported in writing to Engineer, concrete manufacturer, and Contractor within 48 hours of testing. Reports of compressive-strength tests shall contain Project identification name and number, date of concrete placement, name of concrete testing and inspecting agency, location of concrete batch in Work, design compressive strength at 28 days, concrete mixture proportions and materials, compressive breaking strength, and type of break for both 7- and 28-day tests.

F. Additional Tests: Testing and inspecting agency shall make additional tests of concrete when test results indicate that slump, air entrainment, compressive strengths, or other requirements have not been met, as directed by Engineer.

G. Concrete paving will be considered defective if it does not pass tests and inspections.

H. Additional testing and inspecting, at Contractor's expense, will be performed to determine compliance of replaced or additional work with specified requirements.

I. Prepare test and inspection reports.

1.11 REPAIRS AND PROTECTION

A. Remove and replace concrete paving that is broken, damaged, or defective or that does not comply with requirements in this Section. Remove work in complete sections from joint to joint unless otherwise approved by Engineer.

B. Drill test cores, where directed by Engineer, when necessary to determine magnitude of cracks or defective areas. Fill drilled core holes in satisfactory paving areas with portland cement concrete bonded to paving with epoxy adhesive.

C. Protect concrete paving from damage. Exclude traffic from paving for at least 14 days after placement. When construction traffic is permitted, maintain paving as clean as possible by removing surface stains and spillage of materials as they occur.

D. Maintain concrete paving free of stains, discoloration, dirt, and other foreign material. Sweep paving not more than two days before date scheduled for Substantial Compaction inspections.

PAVEMENT MARKINGS

1.1 QUALITY ASSURANCE

Regulatory Requirements: Comply with materials, workmanship, and other applicable requirements of state D.O.T. or local municipality for pavement-marking work.

1.2 FIELD CONDITIONS

Environmental Limitations: Proceed with pavement marking only on clean, dry surfaces and at a minimum ambient or surface temperature of 40 deg F for alkyd materials, 55 deg F for water-based materials, and not exceeding 95 deg F.

1.3 PAVEMENT-MARKING PAINT

A. Pavement-Marking Paint: Alkyd-resin type, lead and chromate free, ready mixed, complying with AASHTO M 248; colors complying with FS TT-P-1952. Color: As indicated.

B. All pavement marking within D.O.T. right-of-way shall be thermoplastic and in accordance with D.O.T. specifications.

1.4 PAVEMENT MARKING

Apply temporary pavement marking before traffic is allowed on any newly paved area or as site conditions dictate. Allow final wearing surface to age for a minimum of 30 days before applying final permanent pavement marking.

1.5 PROTECTING AND CLEANING

A. Protect pavement markings from damage and wear during remainder of construction period.

B. Clean spillage and soiling from adjacent construction using cleaning agents and procedures recommended by manufacturer of affected construction.

CHAIN LINK FENCES AND GATES

1.1 PROJECT CONDITIONS

Field Measurements: Verify layout information for chain-link fences and gates shown on Drawings in relation to property survey and existing structures. Verify dimensions by field measurements.

1.2 WARRANTY

Special Warranty: Manufacturer's standard form in which Installer agrees to repair or replace components of chain-link fences and gates that fail in materials or workmanship within specified warranty period.

1.3 CHAIN-LINK FENCE FABRIC

General: Provide fabric in one-piece heights measured between top and bottom of outer edge of selvage knuckle or twist. Comply with CLFMI Product Manual and with requirements indicated below:

1. Fabric Height: As indicated on Drawings.
2. Steel Wire Fabric: Wire with a diameter of 0.148 inch.
   a. Mesh Size: 2 inches.
   b. Polymer-Coated Fabric: ASTM F 668, over zinc-coated steel wire. Color: Black, complying with ASTM F 934.
3. Selvage: Twisted top and knuckled bottom.

1.4 FENCE FRAMING

Posts and Rails: Comply with ASTM F 1043 for framing, including rails, braces, and line; terminal; and corner posts. Provide members with minimum dimensions and wall thickness according to ASTM F 1043 based on the following:

1. Fence Height: As indicated on Drawings.
2. Material
   a. Line Post: 1.9 inches in diameter.
   b. End, Corner and Pull Post: 2.375 inches.
3. Horizontal Framework Members: top rails complying with ASTM F 1043. Top Rail: 1.66 inches in diameter.
4. Brace Rails: Comply with ASTM F 1043.
5. Metallic Coating for Steel Framing:
   Type A, consisting of not less than minimum 2.0-oz./sq. ft. average zinc coating per ASTM A 123/A 123M or 4.0-oz./sq. ft. zinc coating per ASTM A 653/A 653M.

1.5 TENSION WIRE

Metallic-Coated Steel Wire: 0.177-inch-diameter, marcelled tension wire complying with ASTM A 817 and ASTM A 824, with the following metallic coating: Type II, zinc coated (galvanized) by hot-dip process, with the following minimum coating weight: Matching chain-link fabric coating weight.

1.6 SWING GATES

A. General: Comply with ASTM F 900 for gate posts and single or double swing gate types.

1. Gate Leaf Width: As indicated.
2. Gate Fabric Height: As indicated.

B. Pipe and Tubing:

1. Zinc-Coated Steel: Comply with ASTM F 1043 and ASTM F 1083; protective coating and finish to match fence framing.
2. Gate Posts: Round tubular steel.
3. Gate Frames and Bracing: Round tubular steel.

C. Frame Corner Construction: assembled with corner fittings.

D. Hardware:

1. Hinges: 360-degree inward and outward swing.
2. Latches permitting operation from both sides of gate with provision for padlocking accessible from both sides of gate.

1.7 FITTINGS

A. General: Comply with ASTM F 626.

B. Post Caps: Provide for each post. Provide line post caps with loop to receive tension wire or top rail.

C. Rail and Brace Ends: For each gate, corner, pull, and end post.

D. Rail Fittings: Provide the following:

1. Top Rail Sleeves: Pressed-steel or round-steel tubing not less than 6 inches long.
2. Rail Clamps: Line and corner boulevard clamps for connecting rails in the fence line-to-line posts.

E. Tension and Brace Bands: Pressed steel.

F. Tension Bars: Steel, length not less than 2 inches shorter than full height of chain-link fabric. Provide one bar for each gate and end post, and two for each corner and pull post, unless fabric is integrally woven into post.

G. Truss Rod Assemblies: Steel, hot-dip galvanized after threading rod and turnbuckle or other means of adjustment.

H. Tie Wires, Clips, and Fasteners: According to ASTM F 626. Standard Round Wire Ties: For attaching chain-link fabric to posts, rails, and frames, complying with the following: Hot-Dip Galvanized Steel: 0.148-inch-diameter wire; galvanized coating thickness matching coating thickness of chain-link fence fabric.

1.8 GROUT AND ANCHORING CEMENT

A. Nonshrink, Nonmetallic Grout: Premixed, factory-packaged, nonstaining, noncorrosive, nongaseous grout complying with ASTM C 1107. Provide grout, recommended in writing by manufacturer, for exterior applications.

B. Erosion-Resistant Anchoring Cement: Factory-packaged, nonshrink, nonstaining, hydraulic-controlled expansion cement formulation for mixing with potable water at Project site to create pourable anchoring, patching, and grouting compound. Provide formulation that is resistant to erosion from water exposure without needing protection by a sealer or waterproof coating and that is recommended in writing by manufacturer, for exterior applications.

1.9 ADJUSTING

Gates: Adjust gates to operate smoothly, easily, and quietly, free of binding, warp, excessive deflection, distortion, nonalignment, misplacement, disruption, or malfunction, throughout entire operational range. Confirm that latches and locks engage accurately and securely without forcing or binding.

NOTE:
CONTRACTOR TO FOLLOW THE MORE STRINGENT OF EITHER THE CITY SPECIFICATIONS OR THE SPECIFICATIONS SHOWN HEREIN. MATERIAL TYPES, PARTS SUCH AS VALVES, HYDRANTS, ETC. MUST FOLLOW CITY UTILITY REQUIREMENTS.

CVS pharmacy

12,900 TYPE-A
CHAMFER DRIVE-THRU

STORE NUMBER: 10591
161ST STREET AND SPRING MILL ROAD
WESTFIELD, INDIANA

PROJECT TYPE: NEW STORE
DEAL TYPE:
CS PROJECT NUMBER: 071776

ARCHITECT OF RECORD

CONSULTANT:

AMERICAN STRUCTUREPOINT INC.
7260 SHADELAND STATION
INDIANAPOLIS, INDIANA 46256
p:(317) 547-5580 f:(317) 543-0270
www.structurepoint.com

DEVELOPER:

TMC Indiana 2, LLC
501 Pennsylvania Pkwy.
Suite 160
Indianapolis, Indiana 46280
Phone (317) 705-8800
Contact: Craig Forgey

SEAL:

APPROVAL PENDING
NOT FOR CONSTRUCTION

REVISIONS:

1	TAC COMMENTS	07-10-2015

PLANNING MGR:	JLW
DRAWING BY:	RCB
DATE:	05-29-2015
JOB NUMBER:	2007.01007

TITLE: CIVIL SPECIFICATIONS

SHEET NUMBER: C003

COMMENTS:

PRINT DATE: 7/15/15
PLOT SCALE: 1:2.5849
EDIT DATE: 6/2/15 - 8:22 AM EDITED BY: RBERGER DRAWING FILE: P:\N20071\1007\D. DRAWINGS\CIVIL\C. CONSTRUCTION DOCUMENTS\200701007.CE.C002-C003.SPEC.DWG

EXISTING TOPOGRAPHY NOTES

1. ALL UTILITY INFORMATION SHALL BE VERIFIED BY THE CONTRACTOR. CONTACT ENGINEER IF ANY VARIATION EXISTS.
2. MAINTAIN EXISTING UTILITIES TO REMAIN IN SERVICE AND PROTECT AGAINST DAMAGE DURING DEMOLITION AND CONSTRUCTION OPERATIONS.
3. THE CONTRACTOR SHALL PROTECT AND NOT DESTROY THE BASE SURVEY CONTROL POINTS DURING DEMOLITION AND CONSTRUCTION.

DEMOLITION NOTES

1. ALL WORK TO CONFORM TO STATE AND LOCAL REGULATIONS.
2. CONTRACTOR SHALL KEEP ADJOINING PROPERTIES CLEAN OF CONSTRUCTION DEBRIS AND CONSTRUCTION TRAFFIC AT ALL TIMES.
3. CLEAR AND GRUB ALL TREES AND VEGETATION NECESSARY FOR CONSTRUCTION.
4. PROTECT TREES TO REMAIN DURING CONSTRUCTION.
5. STORAGE OF MATERIALS AND PARKING OF EQUIPMENT AND VEHICLES BELOW TREE CANOPIES WITHIN THE TREE DRIP LINE IS PROHIBITED.
6. THE CONTRACTOR SHALL REMOVE AND DISPOSE OF ALL EXISTING STRUCTURES, FENCES, CONCRETE, ASPHALT PAVEMENT AND OTHER MISCELLANEOUS APPURTENANCES OFF SITE, UNLESS NOTED TO REMAIN ON THE CONTRACT DRAWINGS.
7. THE USE OF ANY TYPE OF EXPLOSIVES WILL NOT BE PERMITTED.
8. CONDUCT DEMOLITION AND CONSTRUCTION OPERATIONS TO ENSURE MINIMAL INTERFERENCE WITH STREETS, WALKS AND OTHER ADJACENT OCCUPIED FACILITIES.
9. DO NOT CLOSE OR OBSTRUCT STREETS, WALKS OR OTHER OCCUPIED FACILITIES WITHOUT PERMISSION FROM THE LOCAL AUTHORITIES HAVING JURISDICTION. PROVIDE ALTERNATE ROUTES AROUND CLOSED OR OBSTRUCTED TRAFFIC WAYS, IF REQUIRED BY GOVERNING AUTHORITIES.
10. ENSURE SAFE PASSAGE OF PERSONS AROUND AREAS OF DEMOLITION AND CONSTRUCTION. CONDUCT OPERATIONS TO PREVENT DAMAGE TO ADJACENT STRUCTURES AND OTHER FACILITIES AND INJURY TO PERSONS.
11. PROMPTLY REPAIR DAMAGE TO ADJACENT FACILITIES CAUSED BY DEMOLITION AND CONSTRUCTION OPERATIONS.
12. ALL UTILITY INFORMATION SHALL BE VERIFIED BY THE CONTRACTOR. CONTACT ENGINEER IF ANY VARIATION EXISTS.
13. MAINTAIN EXISTING UTILITIES TO REMAIN IN SERVICE AND PROTECT AGAINST DAMAGE DURING DEMOLITION AND CONSTRUCTION OPERATIONS.
14. ALL UTILITIES TO BE REMOVED SHALL BE DISCONNECTED AND CAPPED AT THE NEAREST CONNECTION POINT.
15. THE CONTRACTOR SHALL PROTECT AND NOT DESTROY THE BASE SURVEY CONTROL POINTS DURING DEMOLITION AND CONSTRUCTION.
16. NO ON-SITE BURNING IS PERMITTED.
17. CONTRACTOR SHALL USE MEASURES TO CONTROL DUST AT ALL TIMES.
18. DEMOLITION ITEMS INCLUDE BUT ARE NOT LIMITED TO DEMOLITION ITEMS INDICATED ON THESE DRAWINGS. IT IS THE CONTRACTORS RESPONSIBILITY TO REMOVE OR RELOCATE ITEMS WHICH INTERFERE WITH NEW CONSTRUCTION.

SITE NOTES

1. ALL WORK TO CONFORM TO STATE AND LOCAL REGULATIONS.
2. CONTRACTOR SHALL KEEP ADJOINING PROPERTIES CLEAN OF CONSTRUCTION DEBRIS AND CONSTRUCTION TRAFFIC AT ALL TIMES.
3. THE CONTRACTOR SHALL PROTECT AND NOT DESTROY THE BASE SURVEY CONTROL POINTS DURING DEMOLITION AND CONSTRUCTION.
4. ALL PARKING STRIPES ARE TO BE 4" PAINTED (WHITE). ADA ACCESSIBLE PARKING STRIPES SHALL BE 4" PAINTED (BLUE).
5. ALL DIMENSIONS ARE TO THE EDGE OF PAVEMENT OR FACE OF CURB, UNLESS NOTED OTHERWISE.
6. ALL DIMENSIONS ARE TO FACE OF BRICK OR FACING MATERIAL, WHERE APPLICABLE.
7. ALL DIMENSIONS ARE PARALLEL WITH, OR PERPENDICULAR TO BASE LINES, PROPERTY LINES OR BUILDING LINES, UNLESS OTHERWISE NOTED.
8. THE CONTRACTOR SHALL VERIFY ALL DIMENSIONS IN THE FIELD PRIOR TO THE START OF CONSTRUCTION. THE CONTRACTOR SHALL BE RESPONSIBLE FOR ALL FIELD DIMENSIONS. IF ANY DISCREPANCIES ARE FOUND IN THESE PLANS FROM ACTUAL FIELD CONDITIONS, THE CONTRACTOR SHALL NOTIFY ENGINEER IMMEDIATELY.
9. PROVIDE SMOOTH TRANSITIONS FROM NEW AREAS TO EXISTING FEATURES AS NECESSARY.
10. RESURFACE OR RECONSTRUCT AT LEAST TO ORIGINAL CONDITIONS ALL AREAS WHERE THE EXISTING PAVEMENT OR LAWNS ARE DAMAGED DURING CONSTRUCTION FROM TRAFFIC BY CONTRACTORS, SUBCONTRACTORS OR SUPPLIERS AFTER CONSTRUCTION WORK IS COMPLETE.
11. EXISTING PAVEMENT TO BE SAW CUT IN ALL AREAS WHERE INDICATED NEW PAVEMENT TO JOIN EXISTING.
12. THE EDGE OF THE EXISTING ASPHALT PAVEMENT SHALL BE PROPERLY SEALED WITH A TACK COAT MATERIAL IN ALL AREAS WHERE NEW ASPHALT PAVEMENT IS INDICATED TO JOIN EXISTING ASPHALT.
13. CONCRETE SAW CUTTING SHALL BE DONE AS SOON AS POURED CONCRETE HAS CURED AND CAN SUPPORT WEIGHT. PROVIDE A NEAT CUT WHICH IS TRUE IN ALIGNMENT.
14. ALL JOINTS ARE TO CONTINUE THROUGH THE CURB.
15. RADIAL JOINTS SHALL BE NO SHORTER THAN 1.5'.
16. CONTRACTOR SHALL USE A THICKENED EXPANSION JOINT AROUND THE PERIMETER OF ANY BLOCK OUT IN THE CONCRETE PAVING.
17. ALL CONSTRUCTION JOINTS SHALL BE SAWN, CLEANED OF DEBRIS, BLOWN DRY AND IMMEDIATELY SEALED WITH THE APPROPRIATE SEALANT ACCORDING TO MANUFACTURES DIRECTIONS.
18. ALL ASPHALT TO BE IN ACCORDANCE WITH INDIANA DEPARTMENT OF TRANSPORTATION (INDOT) STANDARD SPECIFICATIONS RELATIVE TO MATERIAL, MIX, PLACEMENT AND WORKMANSHIP.
19. ALL SIDEWALKS SHALL COMPLY WITH ADA STANDARDS. MAXIMUM CROSS SLOPE OF 1/4" PER FOOT AND MAXIMUM LONGITUDINAL SLOPE OF 1:20.
20. CHAMFER ALL ENDS OF CURBS.
21. REFER TO GEOTECHNICAL FINDINGS AND ENVIRONMENTAL FINDINGS NOTES INCLUDED THROUGHOUT PLANS.

GRADING NOTES

1. ALL WORK TO CONFORM TO STATE AND LOCAL REGULATIONS.
2. CONTRACTOR SHALL KEEP ADJOINING PROPERTIES CLEAN OF CONSTRUCTION DEBRIS AND CONSTRUCTION TRAFFIC AT ALL TIMES.
3. THE CONTRACTOR SHALL PROTECT AND NOT DESTROY THE BASE SURVEY CONTROL POINTS DURING DEMOLITION AND CONSTRUCTION.
4. THE CONTRACTOR SHALL VERIFY ALL DIMENSIONS IN THE FIELD PRIOR TO THE START OF CONSTRUCTION. THE CONTRACTOR SHALL BE RESPONSIBLE FOR ALL FIELD DIMENSIONS. IF ANY DISCREPANCIES ARE FOUND IN THESE PLANS FROM ACTUAL FIELD CONDITIONS, THE CONTRACTOR SHALL NOTIFY THE ENGINEER IMMEDIATELY.
5. SITE GRADING SHALL NOT PROCEED UNTIL EROSION CONTROL MEASURES HAVE BEEN INSTALLED.
6. THE EXCAVATING CONTRACTOR MUST TAKE PARTICULAR CARE WHEN EXCAVATING IN AND AROUND EXISTING UTILITY LINES AND EQUIPMENT. VERIFY COVER REQUIREMENTS BY UTILITY CONTRACTORS AND/OR UTILITY COMPANIES SO AS NOT TO CAUSE DAMAGE.
7. THE CONTRACTOR SHALL NOTIFY ALL UTILITY COMPANIES 72 HOURS BEFORE CONSTRUCTION IS TO START TO VERIFY IF ANY UTILITIES ARE PRESENT ON SITE. ALL VERIFICATIONS (LOCATION, SIZE AND DEPTH), SHALL BE MADE BY THE APPROPRIATE UTILITY COMPANIES. WHEN EXCAVATING AROUND OR OVER EXISTING UTILITIES, THE CONTRACTOR MUST NOTIFY THE UTILITY COMPANY SO A REPRESENTATIVE OF THAT UTILITY COMPANY CAN BE PRESENT TO INSTRUCT AND OBSERVE DURING CONSTRUCTION. SUBCONTRACTORS ARE RESPONSIBLE FOR LOCATIONS OF UTILITIES FOR THEIR OWN WORK.
8. CONTRACTOR TO ADJUST ALL EXISTING SURFACE INFRASTRUCTURE (HYDRANTS, VALVES, HANDHOLES, CASTINGS, IRRIGATION SYSTEM, UTILITY PEDESTALS, ETC.) AS REQUIRED TO MEET PROPOSED GRADE AT HIS/HER OWN COST.
9. AFTER STRIPPING TOPSOIL MATERIAL, PROOF ROLL IN ACCORDANCE WITH GEOTECHNICAL RECOMMENDATIONS TO DETERMINE LOCATIONS OF ANY POCKETS OF UNSUITABLE MATERIAL. THE NECESSITY FOR SUBDRAINS AND/OR REMOVAL OF ANY UNSUITABLE MATERIAL WITHIN THE PROPOSED SITE WILL BE DETERMINED AT THE TIME OF CONSTRUCTION.
10. PROVIDE POSITIVE DRAINAGE WITHOUT PONDING IN ALL AREAS. AFTER INSTALLATION, CONTRACTOR TO TEST FOR, AND CORRECT, IF ANY, STANDING WATER CONDITIONS.
11. ALL PROPOSED SPOT ELEVATIONS OR CONTOURS ARE THE FINAL PAVEMENT AND FINAL GRADE ELEVATIONS.
12. SEE APPROPRIATE DETAILS TO DETERMINE SUBGRADE ELEVATIONS BELOW FINISH GRADE ELEVATIONS INDICATED.
13. TRENCHES FOR ALL STORM DRAIN LINES SHALL BE BACKFILLED COMPLETELY WITH SELECT GRANULAR MATERIAL IF WITHIN 5 FEET OF PAVEMENT.
14. CONTRACTOR TO PERPETUATE ANY SUBSURFACE DRAIN TILES OR PIPES ENCOUNTERED DURING CONSTRUCTION AND PROVIDE POSITIVE OUTLET TO DOWNSTREAM RECEIVING SYSTEM. CONTRACTOR TO NOTIFY THE ENGINEER WITH ANY CIRCUMSTANCES WHERE THIS CANNOT BE ACCOMPLISHED.
15. DUE TO SITE CONSTRAINTS, THE SITE MAY NOT BALANCE. THE CONTRACTOR IS RESPONSIBLE FOR ALL EARTHWORK IMPORTS OR EXPORTS.
16. CONTRACTOR TO STABILIZE EXPOSED EARTH AS INDICATED ON THE EROSION CONTROL SHEETS.
17. REFER TO GEOTECHNICAL FINDINGS AND ENVIRONMENTAL FINDINGS NOTES INCLUDED THROUGHOUT PLANS

UTILITY NOTES

1. ALL WORK TO CONFORM TO STATE AND LOCAL REGULATIONS.
2. CONTRACTOR SHALL KEEP ADJOINING PROPERTIES CLEAN OF CONSTRUCTION DEBRIS AND CONSTRUCTION TRAFFIC AT ALL TIMES.
3. THE CONTRACTOR SHALL PROTECT AND NOT DESTROY THE BASE SURVEY CONTROL POINTS DURING DEMOLITION AND CONSTRUCTION.
4. THE CONTRACTOR SHALL VERIFY ALL DIMENSIONS IN THE FIELD PRIOR TO THE START OF CONSTRUCTION. THE CONTRACTOR SHALL BE RESPONSIBLE FOR ALL FIELD DIMENSIONS. IF ANY DISCREPANCIES ARE FOUND IN THESE PLANS FROM ACTUAL FIELD CONDITIONS, THE CONTRACTOR SHALL NOTIFY THE ENGINEER IMMEDIATELY.
5. SITE UTILITIES SHALL NOT PROCEED UNTIL EROSION CONTROL MEASURES HAVE BEEN INSTALLED.
6. THE EXCAVATING CONTRACTOR MUST TAKE PARTICULAR CARE WHEN EXCAVATING IN AND AROUND EXISTING UTILITY LINES AND EQUIPMENT. VERIFY COVER REQUIREMENTS BY UTILITY CONTRACTORS AND/OR UTILITY COMPANIES SO AS NOT TO CAUSE DAMAGE.
7. THE CONTRACTOR SHALL NOTIFY ALL UTILITY COMPANIES 72 HOURS BEFORE CONSTRUCTION IS TO START TO VERIFY IF ANY UTILITIES ARE PRESENT ON SITE. ALL VERIFICATIONS (LOCATION, SIZE AND DEPTH), SHALL BE MADE BY THE APPROPRIATE UTILITY COMPANIES. WHEN EXCAVATING AROUND OR OVER EXISTING UTILITIES, THE CONTRACTOR MUST NOTIFY THE UTILITY COMPANY SO A REPRESENTATIVE OF THAT UTILITY COMPANY CAN BE PRESENT TO INSTRUCT AND OBSERVE DURING CONSTRUCTION. SUBCONTRACTORS ARE RESPONSIBLE FOR LOCATIONS OF UTILITIES FOR THEIR OWN WORK.
8. CONTRACTOR TO ADJUST ALL EXISTING SURFACE INFRASTRUCTURE (HYDRANTS, VALVES, HANDHOLES, CASTINGS, IRRIGATION SYSTEM, UTILITY PEDESTALS, ETC.) AS REQUIRED TO MEET PROPOSED GRADE.
9. ALL UTILITY MATERIALS AND INSTALLATION SHALL CONFORM TO LOCAL STANDARDS FOR EACH UTILITY AGENCY HAVING JURISDICTION.
10. TRENCHES FOR ALL UTILITY LINES SHALL BE BACKFILLED COMPLETELY WITH SELECT GRANULAR MATERIAL IF WITHIN 5 FEET OF PAVEMENT.
11. CONTRACTOR SHALL COORDINATE INSTALLATION OF UTILITIES AND CONDUITS TO AVOID CONFLICTS AND PROVIDE REQUIRED MINIMUM DEPTHS OF COVER. THE CONTRACTOR SHALL PROVIDE ANY ADDITIONAL BENDS WITH THRUST BLOCKS REQUIRED TO ASSURE PROPER INSTALLATION OF WATER MAINS AND LATERALS.
12. IN THE EVENT OF A CONFLICT BETWEEN WATER LINES AND STORM DRAINS, THE CONTRACTOR SHALL EITHER ADJUST THE WATER LINE DOWNWARD IN SUCH A MANNER SO THAT THE PIPE MANUFACTURER'S RECOMMENDATIONS ON PIPE DEFLECTION AND JOINT STRESS ARE NOT EXCEEDED OR THE CONTRACTOR SHALL PROVIDE APPROPRIATE BENDS AND CROSSINGS.
13. ALL COORDINATES AND DIMENSIONS ARE TO THE CENTERLINE OF UTILITIES AND STRUCTURES.

EROSION CONTROL NOTES

1. ALL WORK TO CONFORM TO STATE AND LOCAL REGULATIONS.
2. CONTRACTOR SHALL KEEP ADJOINING PROPERTIES CLEAN OF CONSTRUCTION DEBRIS AND CONSTRUCTION TRAFFIC AT ALL TIMES.
3. THE CONTRACTOR SHALL PROTECT AND NOT DESTROY THE BASE SURVEY CONTROL POINTS DURING DEMOLITION AND CONSTRUCTION.
4. CONTRACTOR SHALL INSTALL ALL PERIMETER SILT FENCE AND SEDIMENT CONTROL BARRIERS PRIOR TO CLEARING AND GRADING.
5. THIS PLAN SHALL NOT BE CONSIDERED ALL INCLUSIVE AS THE CONTRACTOR SHALL TAKE ALL NECESSARY PRECAUTIONS TO PREVENT SOIL SEDIMENT FROM LEAVING THE SITE.
6. ADDITIONAL EROSION AND SEDIMENT CONTROL MEASURES SHALL BE INSTALLED IF DEEMED NECESSARY BY ON SITE INSPECTION.
7. LAND ALTERATION WHICH STRIPS THE LAND OF VEGETATION, INCLUDING RE-GRADING, SHALL BE DONE IN A WAY THAT WILL MINIMIZE EROSION.
8. SEDIMENT LADEN WATER SHALL BE DETAINED BY EROSION CONTROL PRACTICES AS NEEDED TO MINIMIZE SEDIMENTATION IN RECEIVING WATER. NO STORM WATER SHALL BE DISCHARGED FROM THE SITE IN A MANNER THAT CAUSES EROSION AT THE POINT OF DISCHARGE.
9. WASTE AND UNUSED BUILDING MATERIALS SHALL NOT BE ALLOWED TO BE CARRIED FROM THE SITE BY STORM WATER RUNOFF. PROPER DISPOSAL OF ALL WASTE AND UNUSED BUILDING MATERIALS IS REQUIRED.
10. SEDIMENT BEING TRACKED ONTO PUBLIC OR PRIVATE ROADWAYS SHALL BE MINIMIZED. CLEARING OF ACCUMULATED SEDIMENT SHALL NOT INCLUDE FLUSHING WITH WATER. CLEARED SEDIMENT SHALL BE RETURNED TO THE SITE FOR DISPOSAL.
11. SOIL WHICH HAS ACCUMULATED NEXT TO EROSION CONTROL DEVICES SHALL BE COLLECTED AND RE-DISTRIBUTED ON SITE AFTER EACH RAINFALL EVENT, AND AT LEAST ONCE A WEEK.
12. IF INSTALLATION OF STORM DRAINAGE SYSTEM SHOULD BE INTERRUPTED BY WEATHER OR NIGHTFALL, THE PIPE ENDS SHALL BE COVERED WITH FILTER FABRIC.
13. THE SITE IS NOT LOCATED WITHIN ANY FLOODPLAIN, FLOODWAY OR FLOODWAY FRINGE AS INDICATED ON THE FLOOD INSURANCE RATE MAP (FIRM) FOR LAKE COUNTY, IN, MAP NUMBER 18089C0210E, DATED JANUARY 18, 2012.
14. SCHEDULE OF EARTHWORK ACTIVITIES:
    a. THE DURATION OF TIME WHICH AN AREA REMAINS EXPOSED SHALL BE KEPT TO A PRACTICAL MINIMUM. THE AREA SHALL BE STABILIZED AS SOON AS POSSIBLE. UNVEGETATED AREAS THAT ARE SCHEDULED OR LIKELY TO BE LEFT INACTIVE FOR FIFTEEN (15) DAYS OR MORE MUST BE TEMPORARILY OR PERMANENTLY STABILIZED WITH MEASURES APPROPRIATE FOR THE SEASON TO MINIMIZE EROSION POTENTIAL. ALTERNATIVE MEASURES TO SITE STABILIZATION ARE ACCEPTABLE IF THE PROJECT SITE OWNER OR THEIR REPRESENTATIVE CAN DEMONSTRATE THEY HAVE IMPLEMENTED EROSION AND SEDIMENT CONTROL MEASURES ADEQUATE TO PREVENT SEDIMENT DISCHARGE.
    b. TOPSOIL REPLACEMENT SHALL TAKE PLACE FROM MARCH 1 TO OCTOBER 31. STOCKPILE TOPSOIL AT ALL OTHER TIMES OF THE YEAR. PERMANENT AND FINAL VEGETATION AND STRUCTURAL EROSION CONTROL DEVICES SHALL BE INSTALLED WITHIN SEVEN (7) DAYS AFTER FINAL GRADING OR AS SOON AS POSSIBLE.
    c. INSTALL INLET PROTECTION AROUND INLETS IMMEDIATELY UPON COMPLETION OF THE STRUCTURE. REMOVE INLET PROTECTION FOR PAVING OPERATION. REPLACE INLET PROTECTION AFTER PAVING IS COMPLETE. INLET PROTECTION SHALL REMAIN IN PLACE UNTIL VEGETATION IS ESTABLISHED ON SEEDED AREAS BEHIND THE CURB.
15. PRIOR TO COMPLETION OF THE PROJECT, CONTRACTOR SHALL CLEAN OUT ALL STORM DRAINAGE STRUCTURES AND RESTORE ALL DITCHES AND PONDS TO DESIGNED GRADES.
16. CONTRACTOR SHALL REMOVE ALL SEDIMENT CONTROL BARRIERS ONCE CONSTRUCTION IS COMPLETE AND THE SITE HAS BEEN STABILIZED.

CVS pharmacy

12,900 TYPE-A
CHAMFER DRIVE-THRU

STORE NUMBER: 10591

161ST STREET AND SPRING MILL ROAD
WESTFIELD, INDIANA

PROJECT TYPE: NEW STORE
DEAL TYPE:
CS PROJECT NUMBER: 071776

ARCHITECT OF RECORD

CONSULTANT:

AMERICAN STRUCTUREPOINT INC.
7260 SHADELAND STATION
INDIANAPOLIS, INDIANA 46256
p:(317) 547-5580 f:(317) 543-0270
www.structurepoint.com

DEVELOPER:

TMC Indiana 2, LLC
501 Pennsylvania Pkwy.
Suite 160
Indianapolis, Indiana 46280
Phone (317) 705-8800
Contact: Craig Forgey

SEAL:

APPROVAL PENDING
NOT FOR CONSTRUCTION

REVISIONS:

1	TAC COMMENTS	07-10-2015

PLANNING MGR:	JLW
DRAWING BY:	RCB
DATE:	05-29-2015
JOB NUMBER:	2007.01007

TITLE: GENERAL NOTES

SHEET NUMBER: C004

COMMENTS:

PRINT DATE: 7/15/15
PLOT SCALE: 1:2.5949
EDIT DATE: 7/9/15 - 3:29 PM EDITED BY: RBERGER DRAWING FILE: P:\W2007\1007\D. DRAWINGS\CIVIL\C. CONSTRUCTION DOCUMENTS\20070107.CE.C004.GN.DWG

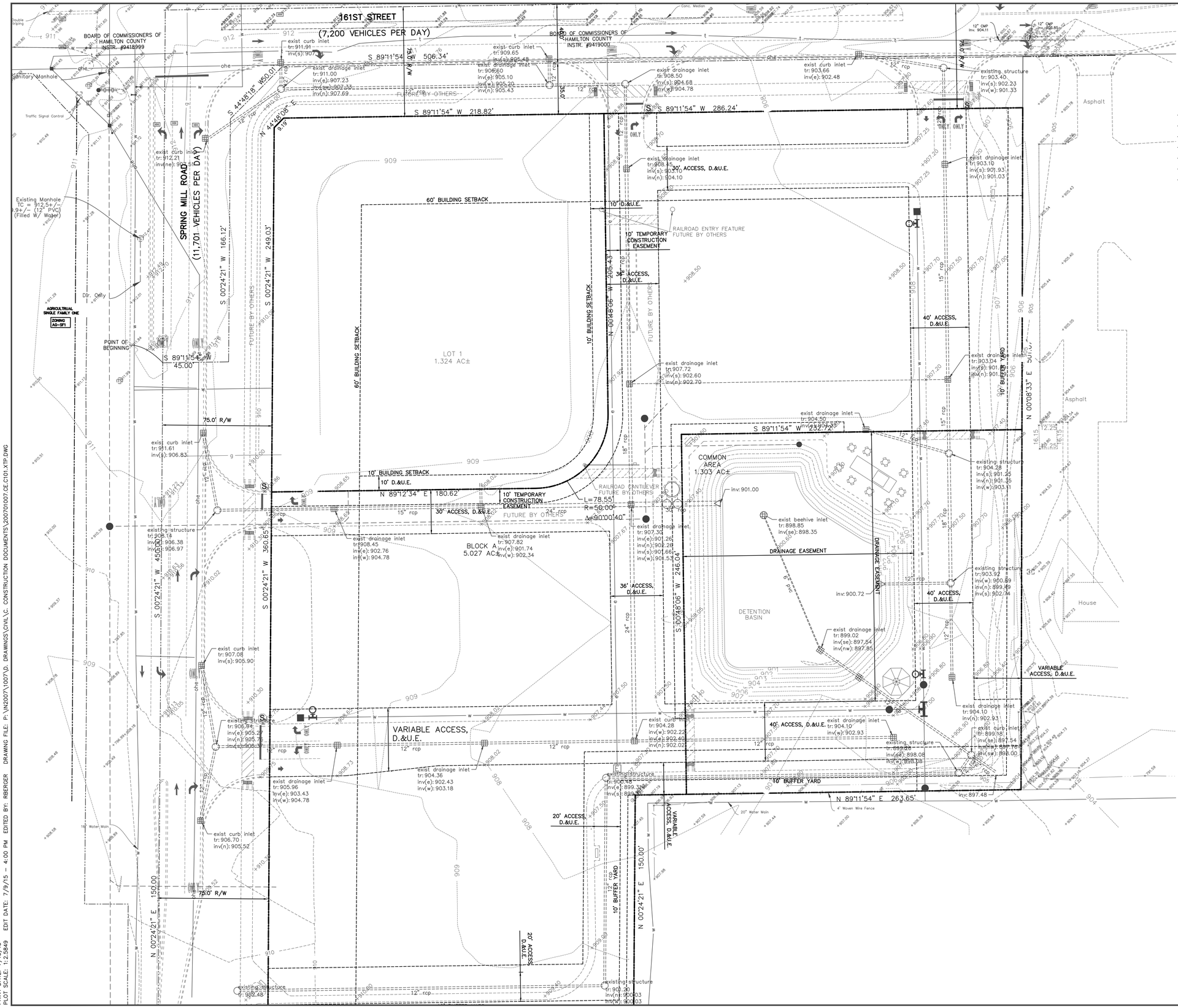

SCALE: 1"=30'

EXISTING LEGEND

S	SANITARY SEWER		SIGN
W	WATER MAIN		STORM MANHOLE
ST	STORM SEWER		STORM INLET
G	GAS LINE		TELEPHONE MANHOLE
OHE	OVERHEAD UTILITIES		TELEPHONE BOX
UFO	FIBER OPTIC		TRAFFIC SIGNAL CONTROLLER
X	FENCE LINE		TRAFFIC SIGNAL MANHOLE
	ELECTRIC METER		TRAFFIC SIGNAL POLE
	FIRE HYDRANT		WATER METER
	GAS METER		WATER VALVE
	GAS VALVE		WELL
	GUY WIRE		AC UNIT
	HAND HOLE		TREE
	MAIL BOX		BUSH
	UTILITY POLE		

LEGAL DESCRIPTION

That portion of the Southwest Quarter of Section 11, Township 18 North, Range 3 East of the Second Principal Meridian, Washington Township, Hamilton County. Indiana, described as follows

Considering the east line of said Southwest Quarter as South 00 degrees 24 minutes 21 seconds West (assumed bearing) and all bearing contained within being relative thereto.

Commencing at a mag nail with "BANNING ENG FIRM #0060"tag set (herein referred to as "mag nail") marking the northwest corner of said Quarter Section; thence South 00 degrees 24 minutes 21 seconds West along the west line thereof 241.12 feet to the POINT OF BEGINNING, said point being the southwest corner of the land of the Board of Commissioners of Hamilton County as described in Instrument Number 9418999 in the Office of the Recorder of said county; thence continue South 00 degrees 24 minutes 21 seconds West along said westline 450.00 feet; thence North 89 degrees 11 minutes 54 seconds East parallel with the north line of said Southwest Quarter 325.00 feet; thence North 00 degrees 24 minutes 21 seconds East parallel with said west line 150.00 feet; thence North 89 degrees 11 minutes 54 seconds East parallel with said north line 263.65 feet; thence North 00 degrees 08 minutes 33 seconds East 501.07 feetto the southeast corner of the land of the Board of Commissioners of Hamilton County as described in Instrument Number 9419001 in said county records; thence along the south line thereof and the south line of said Board per Instrument Numbers 9419000 and 9418999 in said county records, being parallel with said north line of the Quarter Section South 89 degrees 11 minutes 54 seconds West 506.34 feet (the remaining courses are along the south and east lines of said land of the Board per Instrument Number 9418999); thence South 44 degrees 48 minutes 18 seconds West 50.01 feet; thence South 00 degrees 24 minutes 21 seconds West parallel with said west line 166.12 feet; thence South 89 degrees 11 minutes 54 seconds West parallel with said north line 45.00 feet to the POINT OF BEGINNING, containing 7.654 acres, more or less.

BENCHMARK B 112

ELEV. 924.24 NAVD 88
ALONG STATE HIGHWAY 32 ABOUT 2.25 MILES WEST OF WASHINGTON HIGH SCHOOL AT WESTFIELD AND ABOUT 1.0 MILE EAST OF THE CROSS ROAD AT EAGLE TOWN. 0.25 MILE EAST OF THE JUNCTION WITH A ROAD LEADING NORTH, 24 FEET SOUTHEAST OF THE SOUTHEAST CORNER OF A BARN, 4 FEET EAST OF A FENCE CORNER, 1.3 FEET SOUTH OF A WHITE WOODEN WITNESS POST AND ABOUT LEVEL WITH THE HIGHWAY. A STANDARD DISK, STAMPED B 112 1946 AND SET IN THE TOP OF A CONCRETE POST PROJECTING 5 INCHES ABOVE GROUND.

TBM 10
A CUT SQUARE IN THE SOUTH END OF THE MEDIAN IN THE ENTRANCE TO CHASE BANK. BEING SET ON THE NORTH SIDE OF WEST 161st STREET 340 FEET EAST OF THE CENTERLINE OF SPRINGMILL ROAD. ELEV=908.20

TBM 11
A CUT SQUARE IN THE SOUTH SIDE OF A CONCRETE TRAFFIC POLE AT THE SOUTHEAST CORNER OF THE INTERSECTION OF 161st STREET AND SPRINGMILL ROAD. ELEV 911.955

NOTES:

1. CONTRACTOR SHALL PROTECT AND NOT DESTROY THE PROPERTY CORNER MONUMENTS DURING CONSTRUCTION.
2. CONTRACTOR TO VERIFY LOCATION, SIZE AND DEPTH OF EXISTING UTILITIES PRIOR TO COMMENCING ANY CONSTRUCTION. CONTACT ENGINEER IF VARIATION EXISTS.
3. EXISTING INFORMATION IS FROM BANNING ENGINEERING; PROJECT NUMBER: 07053, PROJECT NAME: SPRINGMILL STATION, DATED 05-20-2015.

CAUTION !!

THE LOCATIONS OF ALL EXISTING UNDERGROUND UTILITIES SHOWN ON THIS PLAN ARE BASED UPON ABOVE GROUND EVIDENCE (including, but not limited to, manholes, inlets, valves, and marks made upon the ground by others) AND ARE SPECULATIVE IN NATURE. THERE MAY ALSO BE OTHER EXISTING UNDERGROUND UTILITIES FOR WHICH THERE IS NO ABOVE GROUND EVIDENCE OR FOR WHICH NO ABOVE GROUND EVIDENCE WAS OBSERVED. THE EXACT LOCATIONS OF SAID EXISTING UNDERGROUND UTILITIES SHALL BE VERIFIED BY THE CONTRACTOR PRIOR TO ANY AND ALL CONSTRUCTION.

1-800-382-5544
CALL TOLL FREE
– INDIANA UNDERGROUND –

CVS pharmacy

12,900 TYPE-A
CHAMFER DRIVE-THRU

STORE NUMBER: 10591
161ST STREET AND SPRING MILL ROAD
WESTFIELD, INDIANA

PROJECT TYPE: NEW STORE
DEAL TYPE:
CS PROJECT NUMBER: 071776

ARCHITECT OF RECORD

CONSULTANT:

AMERICAN STRUCTUREPOINT INC.
7260 SHADELAND STATION
INDIANAPOLIS, INDIANA 46256
p:(317) 547-5580 f:(317) 543-0270
www.structurepoint.com

DEVELOPER:

TMC Indiana 2, LLC
501 Pennsylvania Pkwy.
Suite 160
Indianapolis, Indiana 46280
Phone (317) 705-8800
Contact: Craig Forgey

SEAL:

APPROVAL PENDING
NOT FOR CONSTRUCTION

REVISIONS:

1	TAC COMMENTS	07-10-2015

PLANNING MGR:	JLW
DRAWING BY:	RCB
DATE:	05-29-2015
JOB NUMBER:	2007.01007

TITLE:

EXISTING TOPOGRAPHY

SHEET NUMBER:

C101

COMMENTS:

PRINT DATE: 7/15/15
PLOT SCALE: 1:2.5849 EDIT DATE: 7/9/15 - 4:00 PM EDITED BY: RBERGER DRAWING FILE: P:\IN2007\1007\D. DRAWINGS\CIVIL\C. CONSTRUCTION DOCUMENTS\20070107.CE.C101.XTP.DWG

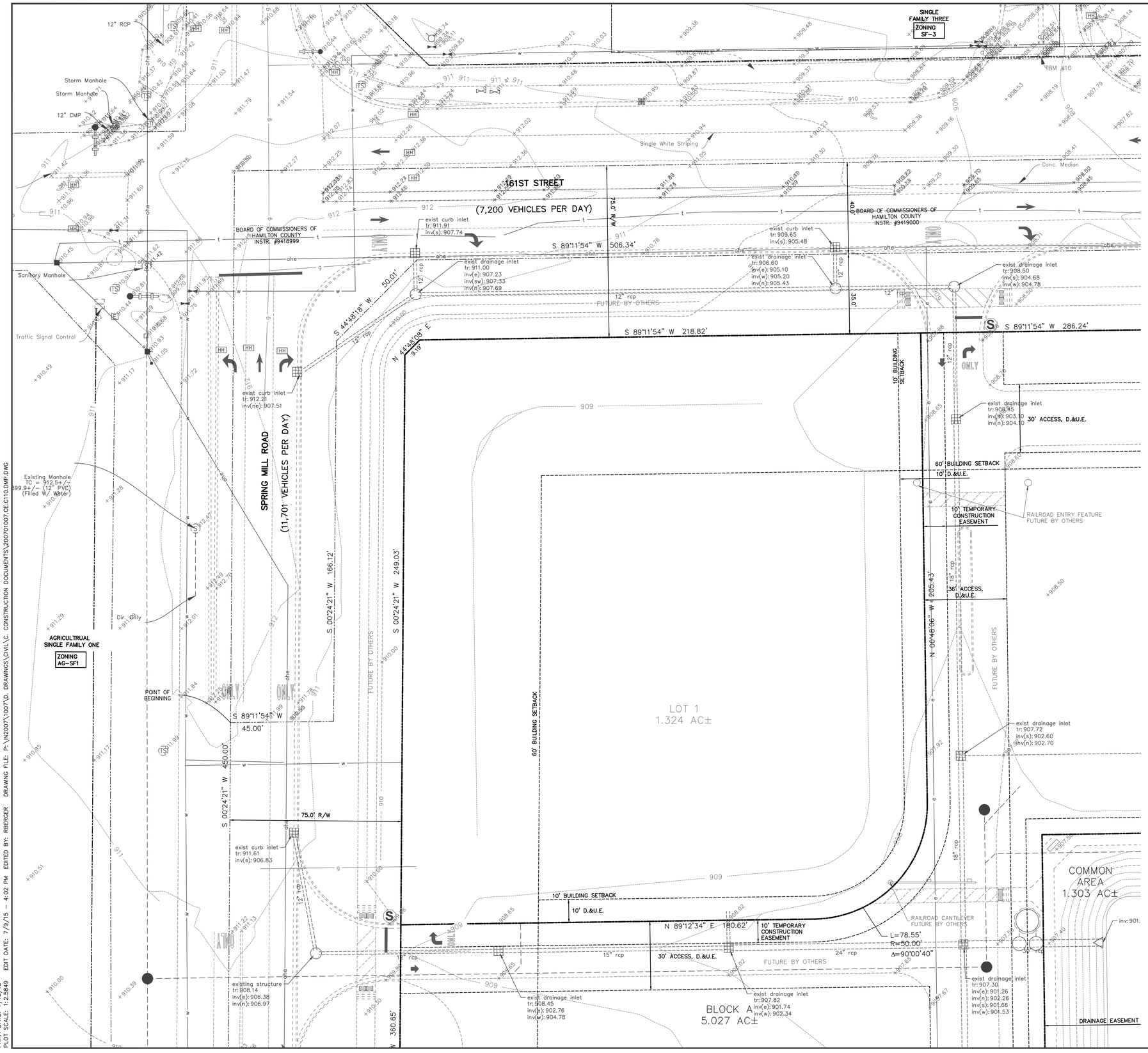

SCALE: 1"=20'

0' 20' 40'

EXISTING LEGEND

—S—	SANITARY SEWER		SIGN
—W—	WATER MAIN		STORM MANHOLE
—ST—	STORM SEWER		STORM INLET
—G—	GAS LINE		TELEPHONE MANHOLE
—OHE—	OVERHEAD UTILITIES		TELEPHONE BOX
—UFO—	FIBER OPTIC		TRAFFIC SIGNAL CONTROLLER
—X—	FENCE LINE		TRAFFIC SIGNAL MANHOLE
	ELECTRIC METER		TRAFFIC SIGNAL POLE
	FIRE HYDRANT		WATER METER
	GAS METER		WATER VALVE
	GAS VALVE		WELL
	GUY WIRE		AC UNIT
	HAND HOLE		TREE
	MAIL BOX		BUSH
	UTILITY POLE		

DEMOLITION LEGEND

- EXISTING BUILDING TO BE DEMOLISHED
- EXISTING CONCRETE TO BE REMOVED
- EXISTING ASPHALT TO BE REMOVED
- OBJECT TO BE REMOVED
- CONCRETE CURB TO BE REMOVED
- UTILITIES TO BE REMOVED
- FENCE, WALL, OR GUARDRAIL TO BE REMOVED
- PAVEMENT TO BE SAWCUT
- X X X X X PIPE TO BE REMOVED

NOTE:
CONTRACTOR TO REMOVE ALL BUILDING UTILITY CONNECTIONS AND APPURTENANCES FOR EXISTING BUILDINGS THAT ARE BEING DEMOLISHED. COORDINATE CAPPING OF EXISTING SERVICES AT RIGHT OF WAY LINES WITH UTILITY SERVICE PROVIDERS.

BENCHMARK B 112
ELEV. 924.24 NAVD 88
ALONG STATE HIGHWAY 32 ABOUT 2.25 MILES WEST OF WASHINGTON HIGH SCHOOL AT WESTFIELD AND ABOUT 1.0 MILE EAST OF THE CROSS ROAD AT EAGLE TOWN. 0.25 MILE EAST OF THE JUNCTION WITH A ROAD LEADING NORTH, 24 FEET SOUTHEAST OF THE SOUTHEAST CORNER OF A BARN, 4 FEET EAST OF A FENCE CORNER, 1.3 FEET SOUTH OF A WHITE WOODEN WITNESS POST AND ABOUT LEVEL WITH THE HIGHWAY. A STANDARD DISK, STAMPED B 112 1946 AND SET IN THE TOP OF A CONCRETE POST PROJECTING 5 INCHES ABOVE GROUND.

TBM 10
A CUT SQUARE IN THE SOUTH END OF THE MEDIAN IN THE ENTRANCE TO CHASE BANK. BEING SET ON THE NORTH SIDE OF WEST 161st STREET 340 FEET EAST OF THE CENTERLINE OF SPRINGMILL ROAD. ELEV=908.20

TBM 11
A CUT SQUARE IN THE SOUTH SIDE OF A CONCRETE TRAFFIC POLE AT THE SOUTHEAST CORNER OF THE INTERSECTION OF 161st STREET AND SPRINGMILL ROAD. ELEV 911.955

NOTES:

1. CONTRACTOR SHALL PROTECT AND NOT DESTROY THE PROPERTY CORNER MONUMENTS DURING CONSTRUCTION.
2. CONTRACTOR TO VERIFY LOCATION, SIZE AND DEPTH OF EXISTING UTILITIES PRIOR TO COMMENCING ANY CONSTRUCTION. CONTACT ENGINEER IF VARIATION EXISTS.
3. EXISTING INFORMATION IS FROM BANNING ENGINEERING; PROJECT NUMBER: 07053, PROJECT NAME: SPRINGMILL STATION, DATED 05-20-2015.

CAUTION !!
THE LOCATIONS OF ALL EXISTING UNDERGROUND UTILITIES SHOWN ON THIS PLAN ARE BASED UPON ABOVE GROUND EVIDENCE (including, but not limited to, manholes, inlets, valves, and marks made upon the ground by others) AND ARE SPECULATIVE IN NATURE. THERE MAY ALSO BE OTHER EXISTING UNDERGROUND UTILITIES FOR WHICH THERE IS NO ABOVE GROUND EVIDENCE OR FOR WHICH NO ABOVE GROUND EVIDENCE WAS OBSERVED. THE EXACT LOCATIONS OF SAID EXISTING UNDERGROUND UTILITIES SHALL BE VERIFIED BY THE CONTRACTOR PRIOR TO ANY AND ALL CONSTRUCTION.
1-800-382-5544
CALL TOLL FREE
– INDIANA UNDERGROUND –

CVS pharmacy

12,900 TYPE-A
CHAMFER DRIVE-THRU

STORE NUMBER: 10591
161ST STREET AND SPRING MILL ROAD
WESTFIELD, INDIANA

PROJECT TYPE: NEW STORE
DEAL TYPE:
CS PROJECT NUMBER: 071776

ARCHITECT OF RECORD

CONSULTANT:

AMERICAN STRUCTUREPOINT INC.
7260 SHADELAND STATION
INDIANAPOLIS, INDIANA 46256
p:(317) 547-5580 f:(317) 543-0270
www.structurepoint.com

DEVELOPER:

TMC Indiana 2, LLC
501 Pennsylvania Pkwy.
Suite 160
Indianapolis, Indiana 46280
Phone (317) 705-8800
Contact: Craig Forgey

SEAL:

APPROVAL PENDING
NOT FOR CONSTRUCTION

REVISIONS:

1	TAC COMMENTS	07-10-2015

PLANNING MGR:	JLW
DRAWING BY:	RCB
DATE:	05-29-2015
JOB NUMBER:	2007.01007

TITLE:
DEMOLITION PLAN

SHEET NUMBER:
C110

COMMENTS:

PRINT DATE: 7/15/15
PLOT SCALE: 1:2.5849 EDIT DATE: 7/9/15 - 4:02 PM EDITED BY: RBERGER DRAWING FILE: P:\N2007\1007\D. DRAWINGS\CIVIL\C. CONSTRUCTION DOCUMENTS\2007010007.CE.C110.DMP.DWG

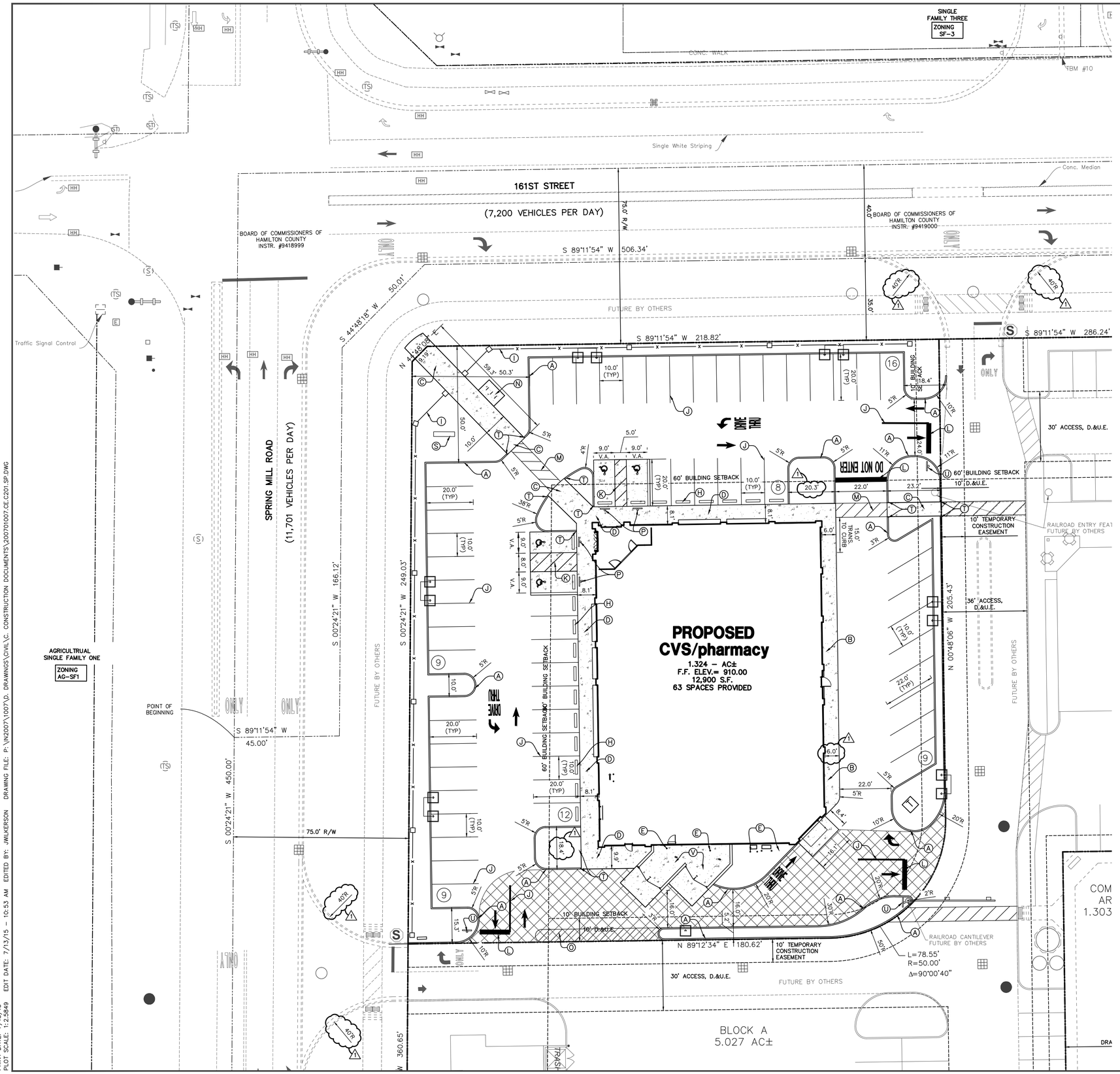

0' 20' 40'

SCALE: 1"=20'

EXISTING LEGEND

—S—	SANITARY SEWER		SIGN
—W—	WATER MAIN		STORM MANHOLE
—ST—	STORM SEWER		STORM INLET
—G—	GAS LINE		TELEPHONE MANHOLE
—OHE—	OVERHEAD UTILITIES		TELEPHONE BOX
—UFO—	FIBER OPTIC		TRAFFIC SIGNAL CONTROLLER
—X—	FENCE LINE		TRAFFIC SIGNAL MANHOLE
	ELECTRIC METER		TRAFFIC SIGNAL POLE
	FIRE HYDRANT		WATER METER
	GAS METER		WATER VALVE
	GAS VALVE		WELL
	GUY WIRE		AC UNIT
	HAND HOLE		TREE
	MAIL BOX		BUSH
	UTILITY POLE		

PROPOSED SITE LEGEND

	LIGHT DUTY PAVEMENT
	HEAVY DUTY PAVEMENT
	CONCRETE
	DIRECTIONAL ARROWS, PAINTED WHITE
DRIVE THRU	WORD "DRIVE THRU", PAINTED WHITE
A	6" STRAIGHT CONCRETE CURB
B	COMBINED WALK & CURB
C	CONCRETE SIDEWALK
D	FLUSH CONCRETE SIDEWALK
E	6" DIA. STEEL PIPE BOLLARD
F	CONCRETE PAD
G	CONCRETE PAVEMENT
H	CONCRETE PARKING BUMPER
I	FENCE (SEE ARCHITECTURAL PLANS)
J	4" SOLID WHITE, PAINT LINE
K	4" SOLID BLUE, PAINT LINE (A.D.A SPACE)
L	24" STOP BAR, WHITE, PAINT
M	24" WHITE, THERMOPLASTIC, PEDESTRIAN CROSSING
N	BIKE RACK (3 SPACES)
O	4" SOLID YELLOW, PAINT LINE
P	ADA PARKING SIGN (VAN ACCESSIBLE AS NOTED)
R1	ADA RAMP (TYPE "G")
R2	ADA RAMP (TYPE "H")
S	PYLON SIGN
T	CURB TAPER
U	STOP SIGN
V	TRASH ENCLOSURE (SEE ARCHITECTURAL PLANS)
	A.D.A. ACCESSIBLE PARKING SYMBOL PAINTED BLUE
T	CONCRETE TRANSFORMER PAD
	LIGHT POLE

PARKING ANALYSIS

CVS S.F.:	12,900 SF
REQUIRED RATIO:	1/200 S.F.
SPACES REQUIRED =	65 SPACES
PARKING PROVIDED (9'x20'):	59 SPACES
A.D.A. PARKING PROVIDED: (INCLUDES 1 VAN ACCESSIBLE)	4 SPACES
TOTAL PARKING PROVIDED =	63 SPACES

NOTES:

1. CONTRACTOR SHALL PROTECT AND NOT DESTROY THE PROPERTY CORNER MONUMENTS DURING CONSTRUCTION.
2. CONTRACTOR TO VERIFY LOCATION, SIZE AND DEPTH OF EXISTING UTILITIES PRIOR TO COMMENCING ANY CONSTRUCTION. CONTACT ENGINEER IF VARIATION EXISTS.
3. EXISTING INFORMATION IS FROM BANNING ENGINEERING; PROJECT NUMBER: 07053, PROJECT NAME: SPRINGMILL STATION, DATED 05–20–2015.

CAUTION !!

THE LOCATIONS OF ALL EXISTING UNDERGROUND UTILITIES SHOWN ON THIS PLAN ARE BASED UPON ABOVE GROUND EVIDENCE (including, but not limited to, manholes, inlets, valves, and marks made upon the ground by others) AND ARE SPECULATIVE IN NATURE. THERE MAY ALSO BE OTHER EXISTING UNDERGROUND UTILITIES FOR WHICH THERE IS NO ABOVE GROUND EVIDENCE OR FOR WHICH NO ABOVE GROUND EVIDENCE WAS OBSERVED. THE EXACT LOCATIONS OF SAID EXISTING UNDERGROUND UTILITIES SHALL BE VERIFIED BY THE CONTRACTOR PRIOR TO ANY AND ALL CONSTRUCTION.

1–800–382–5544
CALL TOLL FREE
– INDIANA UNDERGROUND –

CVS pharmacy

12,900 TYPE-A
CHAMFER DRIVE-THRU

STORE NUMBER: 10591

161ST STREET AND SPRING MILL ROAD
WESTFIELD, INDIANA

PROJECT TYPE: NEW STORE
DEAL TYPE:
CS PROJECT NUMBER: 071776

ARCHITECT OF RECORD

CONSULTANT:

AMERICAN STRUCTUREPOINT INC.
7260 SHADELAND STATION
INDIANAPOLIS, INDIANA 46256
p:(317) 547-5580 f:(317) 543-0270
www.structurepoint.com

DEVELOPER:

TMC Indiana 2, LLC
501 Pennsylvania Pkwy.
Suite 160
Indianapolis, Indiana 46280
Phone (317) 705–8800
Contact: Craig Forgey

SEAL:

APPROVAL PENDING
NOT FOR CONSTRUCTION

REVISIONS:

1	TAC COMMENTS	07–10–2015

PLANNING MGR:	JLW
DRAWING BY:	RCB
DATE:	05–29–2015
JOB NUMBER:	2007.01007

TITLE:

SITE PLAN

SHEET NUMBER:

C201

COMMENTS:

PRINT DATE: 7/15/15
PLOT SCALE: 1:2.5849
EDIT DATE: 7/13/15 – 10:53 AM EDITED BY: JWILKERSON DRAWING FILE: P:\IN2007\1007\D. DRAWINGS\CIVIL\C. CONSTRUCTION DOCUMENTS\2007010 07.CE.C201.SP.DWG

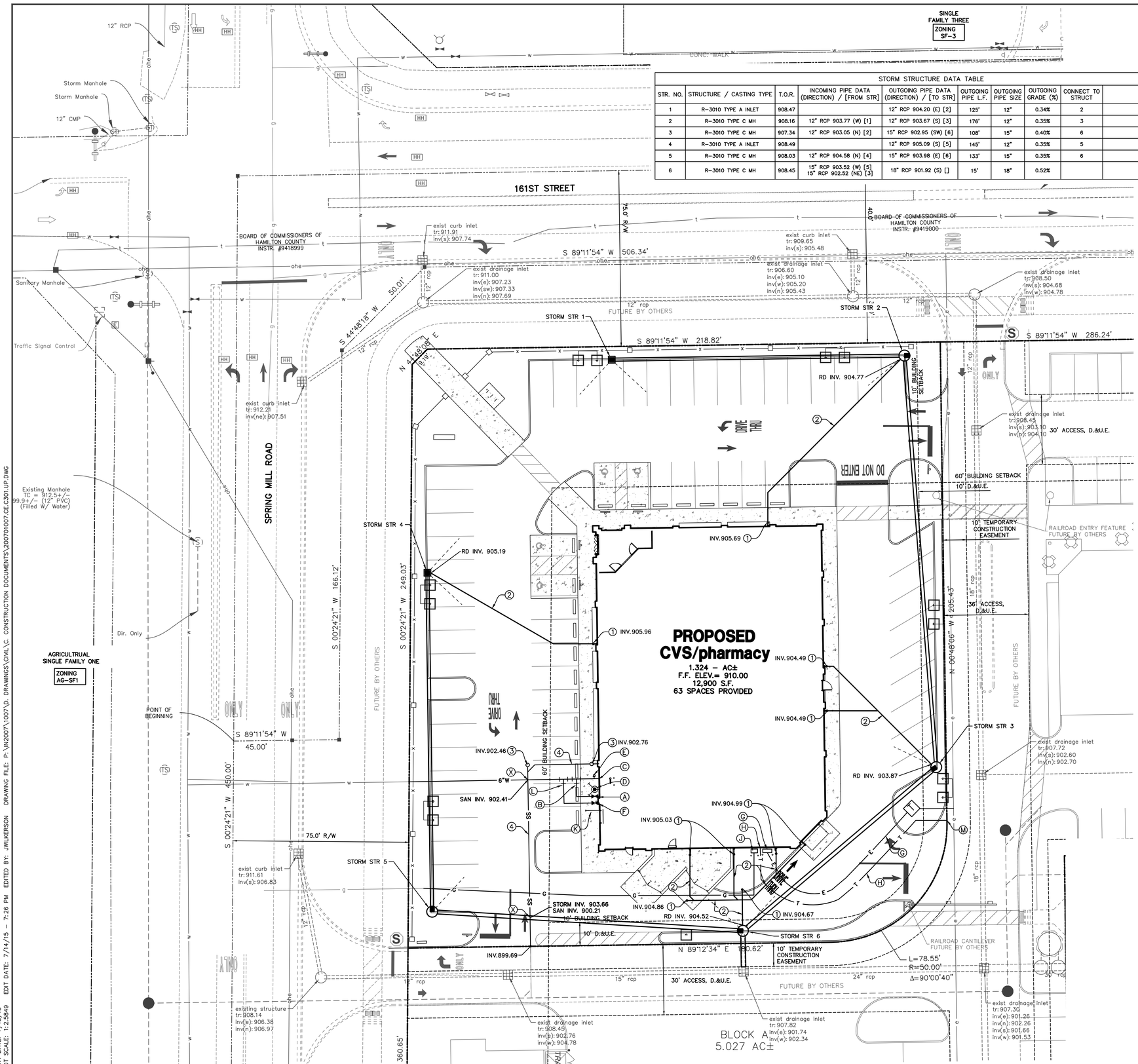

SCALE: 1"=20'

STORM STRUCTURE DATA TABLE

STR. NO.	STRUCTURE / CASTING TYPE	T.O.R.	INCOMING PIPE DATA (DIRECTION) / [FROM STR]	OUTGOING PIPE DATA (DIRECTION) / [TO STR]	OUTGOING PIPE L.F.	OUTGOING PIPE SIZE	OUTGOING GRADE (%)	CONNECT TO STRUCT	REMARKS
1	R-3010 TYPE A INLET	908.47		12" RCP 904.20 (E) [2]	125'	12"	0.34%	2	
2	R-3010 TYPE C MH	908.16	12" RCP 903.77 (W) [1]	12" RCP 903.67 (S) [3]	176'	12"	0.35%	3	
3	R-3010 TYPE C MH	907.34	12" RCP 903.05 (N) [2]	15" RCP 902.95 (SW) [6]	108'	15"	0.40%	6	
4	R-3010 TYPE A INLET	908.49		12" RCP 905.09 (S) [5]	145'	12"	0.35%	5	
5	R-3010 TYPE C MH	908.03	12" RCP 904.58 (N) [4]	15" RCP 903.98 (E) [6]	133'	15"	0.35%	6	
6	R-3010 TYPE C MH	908.45	15" RCP 903.52 (W) [5] 15" RCP 902.52 (NE) [3]	18" RCP 901.92 (S) []	15'	18"	0.52%		

EXISTING LEGEND

—S—	SANITARY SEWER		SIGN
—W—	WATER MAIN		STORM MANHOLE
—ST—	STORM SEWER		STORM INLET
—G—	GAS LINE		TELEPHONE MANHOLE
—OHE—	OVERHEAD UTILITIES		TELEPHONE BOX
—UFO—	FIBER OPTIC		TRAFFIC SIGNAL CONTROLLER
—X—	FENCE LINE		TRAFFIC SIGNAL MANHOLE
	ELECTRIC METER		TRAFFIC SIGNAL POLE
	FIRE HYDRANT		WATER METER
	GAS METER		WATER VALVE
	GAS VALVE		WELL
	GUY WIRE		AC UNIT
	HAND HOLE		TREE
	MAIL BOX		BUSH
	UTILITY POLE		

PROPOSED UTILITY LEGEND

—SS—	SANITARY LATERAL
—G—	GAS LINE
—E—	ELECTRIC LINE
—T—	TELEPHONE LINE
—W—	WATER LINE
—RD—	ROOF DRAIN
- - - -	20 LF OF 4" PERFORATED PVC UNDERDRAIN
GM	GAS METER
T	ELECTRICAL TRANSFORMER
	VALVE
	WATER METER PIT
	POST INDICATOR VALVE
	HYDRANT
	FIRE DEPARTMENT CONNECTION WITH BUILDING ADDRESS
1	STORM CLEANOUT
2	6" PVC ROOF DRAIN @ 1.0% MIN.
3	SANITARY CLEANOUT
4	6" PVC SAN. LATERAL @ 1.04%

- (A) 1" DOMESTIC SERVICE METER LOCATED INSIDE BUILDING WITH BYPASS AND BACK FLOW PREVENTER
- (B) 1 1/2" DOMESTIC WATER LINE CONNECTION TO BUILDING (REDUCE FOR METER)
- (C) 6" FIRE SPRINKLER LINE CONNECTION TO BUILDING WITH BACK FLOW PREVENTER
- (D) FIRE DEPARTMENT CONNECTION
- (E) POST INDICATOR VALVE WITH TAMPER SWITCH
- (F) 1" IRRIGATION METER LOCATED INSIDE BUILDING WITH BACK FLOW PREVENTER
- (G) ELECTRIC SERVICE (1)–1" PVC CONDUIT WITH PULL WIRES AND (3)–4" PVC CONDUITS WITH PULL WIRES
- (H) TELEPHONE SERVICE (1)–4" PVC CONDUIT WITH PULL WIRES
- (J) 1 1/2" GAS SERVICE WITH METER ON BUILDING
- (K) 1 1/2" LANDSCAPE IRRIGATION CONDUIT WITH 1" ELECTRICAL LANDSCAPE CONTROLS CONDUIT
- (L) 2" IRRIGATION LINE CONNECTION TO BUILDING (REDUCE FOR METER)
- (M) COORDINATE CONNECTION WITH UTILITY COMPANY.
- (X) POTENTIAL UTILITY CONFLICT (ALL WATER/SANITARY/STORM CROSSINGS TO HAVE A MINIMUM OF 18" VERTICAL CLEARANCE. CONTACT ENGINEER IF CONFLICTS EXIST. RELOCATE EXISTING UTILITIES AS REQUIRED.)

BENCHMARK B 112
ELEV. 924.24 NAVD 88
ALONG STATE HIGHWAY 32 ABOUT 2.25 MILES WEST OF WASHINGTON HIGH SCHOOL AT WESTFIELD AND ABOUT 1.0 MILE EAST OF THE CROSS ROAD AT EAGLE TOWN. 0.25 MILE EAST OF THE JUNCTION WITH A ROAD LEADING NORTH, 24 FEET SOUTHEAST OF THE SOUTHEAST CORNER OF A BARN, 4 FEET EAST OF A FENCE CORNER, 1.3 FEET SOUTH OF A WHITE WOODEN WITNESS POST AND ABOUT LEVEL WITH THE HIGHWAY. A STANDARD DISK, STAMPED B 112 1946 AND SET IN THE TOP OF A CONCRETE POST PROJECTING 5 INCHES ABOVE GROUND.

TBM 10
A CUT SQUARE IN THE SOUTH END OF THE MEDIAN IN THE ENTRANCE TO CHASE BANK. BEING SET ON THE NORTH SIDE OF WEST 161st STREET 340 FEET EAST OF THE CENTERLINE OF SPRINGMILL ROAD. ELEV=908.20

TBM 11
A CUT SQUARE IN THE SOUTH SIDE OF A CONCRETE TRAFFIC POLE AT THE SOUTHEAST CORNER OF THE INTERSECTION OF 161st STREET AND SPRINGMILL ROAD. ELEV 911.955

NOTES:

1. CONTRACTOR SHALL PROTECT AND NOT DESTROY THE PROPERTY CORNER MONUMENTS DURING CONSTRUCTION.
2. CONTRACTOR TO VERIFY LOCATION, SIZE AND DEPTH OF EXISTING UTILITIES PRIOR TO COMMENCING ANY CONSTRUCTION. CONTACT ENGINEER IF VARIATION EXISTS.
3. EXISTING INFORMATION IS FROM BANNING ENGINEERING; PROJECT NUMBER: 07053, PROJECT NAME: SPRINGMILL STATION, DATED 05–20–2015.

CAUTION !!
THE LOCATIONS OF ALL EXISTING UNDERGROUND UTILITIES SHOWN ON THIS PLAN ARE BASED UPON ABOVE GROUND EVIDENCE (including, but not limited to, manholes, inlets, valves, and marks made upon the ground by others) AND ARE SPECULATIVE IN NATURE. THERE MAY ALSO BE OTHER EXISTING UNDERGROUND UTILITIES FOR WHICH THERE IS NO ABOVE GROUND EVIDENCE OR FOR WHICH NO ABOVE GROUND EVIDENCE WAS OBSERVED. THE EXACT LOCATIONS OF SAID EXISTING UNDERGROUND UTILITIES SHALL BE VERIFIED BY THE CONTRACTOR PRIOR TO ANY AND ALL CONSTRUCTION.

1–800–382–5544
CALL TOLL FREE
– INDIANA UNDERGROUND –

CVS pharmacy

12,900 TYPE-A
CHAMFER DRIVE-THRU

STORE NUMBER: 10591
161ST STREET AND SPRING MILL ROAD
WESTFIELD, INDIANA

PROJECT TYPE: NEW STORE
DEAL TYPE:
CS PROJECT NUMBER: 071776

ARCHITECT OF RECORD

CONSULTANT:

AMERICAN STRUCTUREPOINT INC.
7260 SHADELAND STATION
INDIANAPOLIS, INDIANA 46256
p:(317) 547-5580 f:(317) 543-0270
www.structurepoint.com

DEVELOPER:

TMC Indiana 2, LLC
501 Pennsylvania Pkwy.
Suite 160
Indianapolis, Indiana 46280
Phone (317) 705–8800
Contact: Craig Forgey

SEAL:

APPROVAL PENDING
NOT FOR CONSTRUCTION

REVISIONS:

1	TAC COMMENTS	07–10–2015

PLANNING MGR:	JLW
DRAWING BY:	RCB
DATE:	05–29–2015
JOB NUMBER:	2007.01007

TITLE:
UTILITY PLAN

SHEET NUMBER:
C301

COMMENTS:

PRINT DATE: 7/15/15
PLOT SCALE: 1:2.5849 EDIT DATE: 7/14/15 – 7:26 PM EDITED BY: JWLKERSON DRAWING FILE: P:\N\2007\1007\D. DRAWINGS\CIVIL\C. CONSTRUCTION DOCUMENTS\200701007.CE.C301.UP.DWG

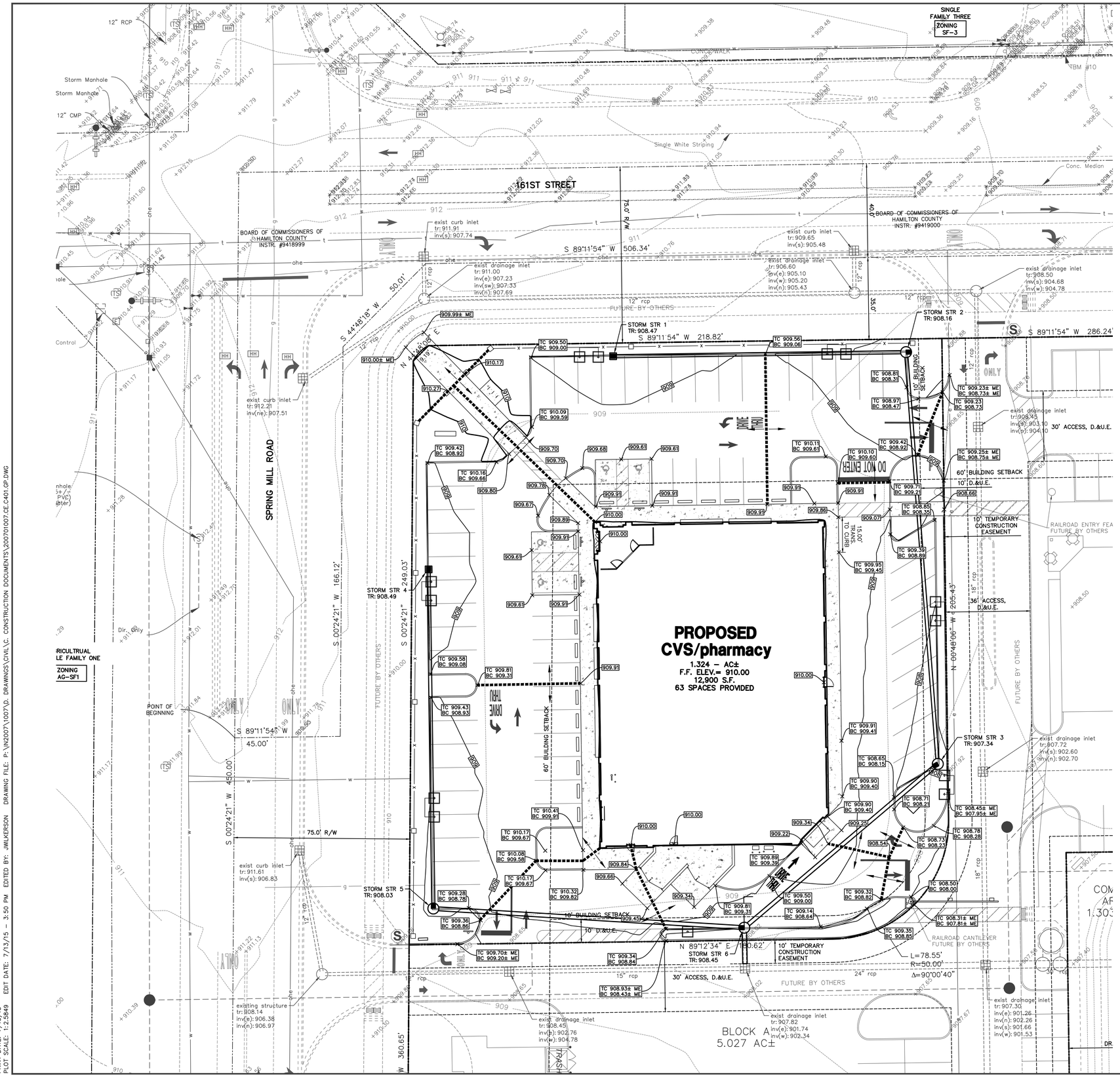

SCALE: 1"=20'

EXISTING LEGEND

—S—	SANITARY SEWER		SIGN
—W—	WATER MAIN		STORM MANHOLE
—ST—	STORM SEWER		STORM INLET
—G—	GAS LINE		TELEPHONE MANHOLE
—OHE—	OVERHEAD UTILITIES		TELEPHONE BOX
—UFO—	FIBER OPTIC		TRAFFIC SIGNAL CONTROLLER
—X—	FENCE LINE		TRAFFIC SIGNAL MANHOLE
	ELECTRIC METER		TRAFFIC SIGNAL POLE
	FIRE HYDRANT		WATER METER
	GAS METER		WATER VALVE
	GAS VALVE		WELL
	GUY WIRE		AC UNIT
	HAND HOLE		TREE
	MAIL BOX		BUSH
	UTILITY POLE		

PROPOSED GRADING LEGEND

M.E.	MATCH EXISTING
EP	EDGE OF PAVEMENT
BC	BOTTOM OF CURB
TC	TOP OF CURB
BW	BOTTOM OF WALL
TW	TOP OF WALL
AC	ADJUST EXISTING CASTING TO PROPOSED GRADE
	4" PERFORATED PVC UNDERDRAIN
000	CONTOURS
	FLOW LINE
TC 000.50 BC 000.00	CURB ELEVATIONS
000.00	SPOT ELEVATIONS
	GRADE BREAK

BENCHMARK B 112
ELEV. 924.24 NAVD 88
ALONG STATE HIGHWAY 32 ABOUT 2.25 MILES WEST OF WASHINGTON HIGH SCHOOL AT WESTFIELD AND ABOUT 1.0 MILE EAST OF THE CROSS ROAD AT EAGLE TOWN. 0.25 MILE EAST OF THE JUNCTION WITH A ROAD LEADING NORTH, 24 FEET SOUTHEAST OF THE SOUTHEAST CORNER OF A BARN, 4 FEET EAST OF A FENCE CORNER, 1.3 FEET SOUTH OF A WHITE WOODEN WITNESS POST AND ABOUT LEVEL WITH THE HIGHWAY. A STANDARD DISK, STAMPED B 112 1946 AND SET IN THE TOP OF A CONCRETE POST PROJECTING 5 INCHES ABOVE GROUND.

TBM 10
A CUT SQUARE IN THE SOUTH END OF THE MEDIAN IN THE ENTRANCE TO CHASE BANK. BEING SET ON THE NORTH SIDE OF WEST 161st STREET 340 FEET EAST OF THE CENTERLINE OF SPRINGMILL ROAD. ELEV=908.20

TBM 11
A CUT SQUARE IN THE SOUTH SIDE OF A CONCRETE TRAFFIC POLE AT THE SOUTHEAST CORNER OF THE INTERSECTION OF 161st STREET AND SPRINGMILL ROAD. ELEV 911.955

NOTES:

1. CONTRACTOR SHALL PROTECT AND NOT DESTROY THE PROPERTY CORNER MONUMENTS DURING CONSTRUCTION.
2. CONTRACTOR TO VERIFY LOCATION, SIZE AND DEPTH OF EXISTING UTILITIES PRIOR TO COMMENCING ANY CONSTRUCTION. CONTACT ENGINEER IF VARIATION EXISTS.
3. EXISTING INFORMATION IS FROM BANNING ENGINEERING; PROJECT NUMBER: 07053, PROJECT NAME: SPRINGMILL STATION, DATED 05–20–2015.

CAUTION !!
THE LOCATIONS OF ALL EXISTING UNDERGROUND UTILITIES SHOWN ON THIS PLAN ARE BASED UPON ABOVE GROUND EVIDENCE (including, but not limited to, manholes, inlets, valves, and marks made upon the ground by others) AND ARE SPECULATIVE IN NATURE. THERE MAY ALSO BE OTHER EXISTING UNDERGROUND UTILITIES FOR WHICH THERE IS NO ABOVE GROUND EVIDENCE OR FOR WHICH NO ABOVE GROUND EVIDENCE WAS OBSERVED. THE EXACT LOCATIONS OF SAID EXISTING UNDERGROUND UTILITIES SHALL BE VERIFIED BY THE CONTRACTOR PRIOR TO ANY AND ALL CONSTRUCTION.

1–800–382–5544
CALL TOLL FREE
– INDIANA UNDERGROUND –

CVS pharmacy

12,900 TYPE-A
CHAMFER DRIVE-THRU

STORE NUMBER: 10591
161ST STREET AND SPRING MILL ROAD
WESTFIELD, INDIANA

PROJECT TYPE: NEW STORE
DEAL TYPE:
CS PROJECT NUMBER: 071776

ARCHITECT OF RECORD

CONSULTANT:

AMERICAN STRUCTUREPOINT INC.
7260 SHADELAND STATION
INDIANAPOLIS, INDIANA 46256
p:(317) 547-5580 f:(317) 543-0270
www.structurepoint.com

DEVELOPER:

TMC Indiana 2, LLC
501 Pennsylvania Pkwy.
Suite 160
Indianapolis, Indiana 46280
Phone (317) 705–8800
Contact: Craig Forgey

SEAL:

APPROVAL PENDING
NOT FOR CONSTRUCTION

REVISIONS:

1	TAC COMMENTS	07–10–2015

PLANNING MGR:	JLW
DRAWING BY:	RCB
DATE:	05–29–2015
JOB NUMBER:	2007.01007

TITLE:
GRADING PLAN

SHEET NUMBER:
C401

COMMENTS:

PRINT DATE: 7/15/15
PLOT SCALE: 1:2.5849 EDIT DATE: 7/13/15 – 3:50 PM EDITED BY: WILKERSON DRAWING FILE: P:\N\2007\1007\D. DRAWINGS\CIVIL\C. CONSTRUCTION DOCUMENTS\20070107.CE.C401.GP.DWG

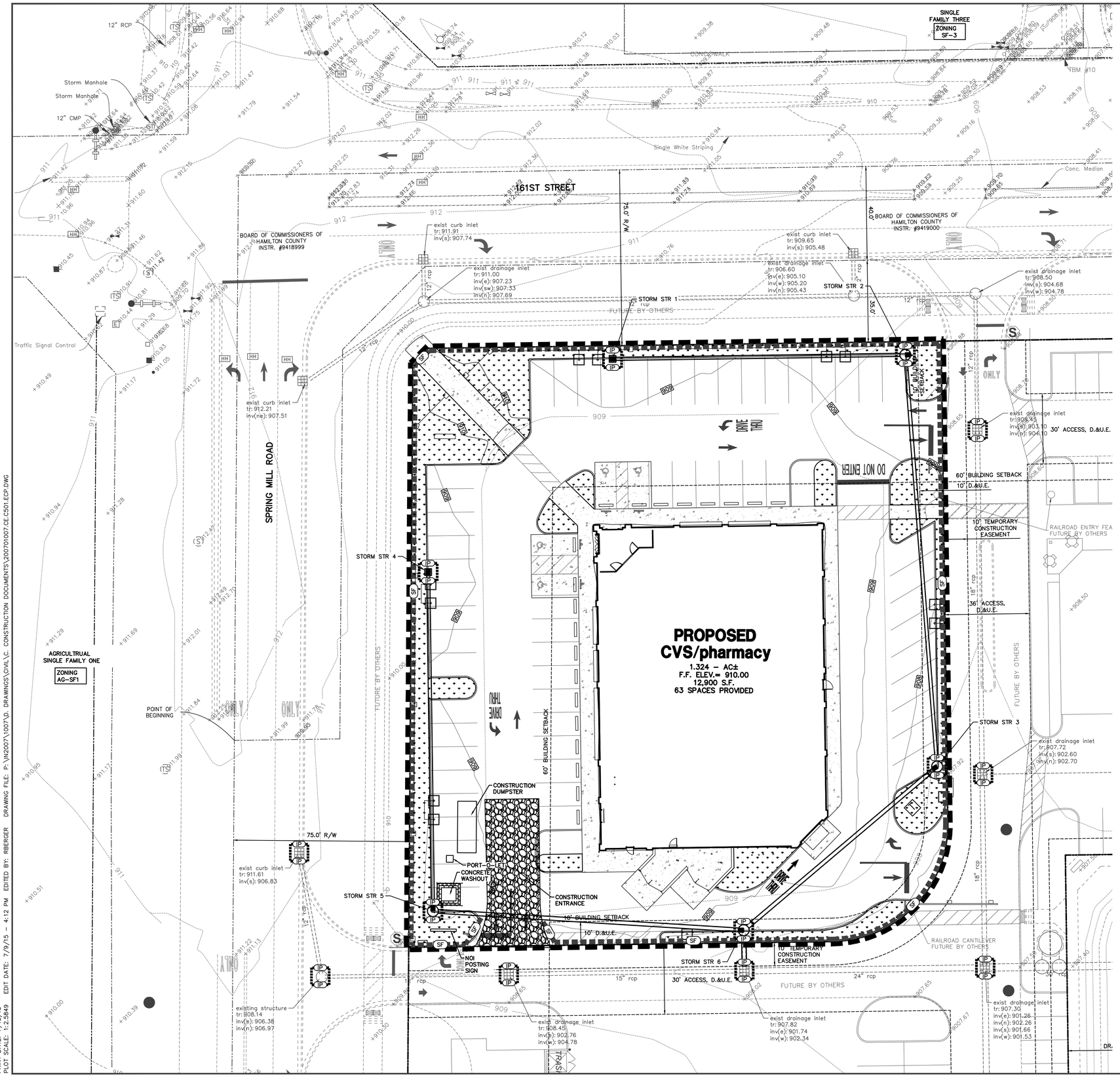

SCALE: 1"=20'

EXISTING LEGEND

—S—	SANITARY SEWER		SIGN
—W—	WATER MAIN		STORM MANHOLE
—ST—	STORM SEWER		STORM INLET
—G—	GAS LINE		TELEPHONE MANHOLE
—OHE—	OVERHEAD UTILITIES		TELEPHONE BOX
—UFO—	FIBER OPTIC		TRAFFIC SIGNAL CONTROLLER
—X—	FENCE LINE		TRAFFIC SIGNAL MANHOLE
	ELECTRIC METER		TRAFFIC SIGNAL POLE
	FIRE HYDRANT		WATER METER
	GAS METER		WATER VALVE
	GAS VALVE		WELL
	GUY WIRE		AC UNIT
	HAND HOLE		TREE
	MAIL BOX		BUSH
	UTILITY POLE		

PROPOSED EROSION CONTROL LEGEND

SF	SILT FENCE
IP	INLET PROTECTION
	PERMANENT SEEDING
	GRAVEL CONSTRUCTION ENTRANCE
	CONSTRUCTION LIMITS

BENCHMARK B 112
ELEV. 924.24 NAVD 88
ALONG STATE HIGHWAY 32 ABOUT 2.25 MILES WEST OF WASHINGTON HIGH SCHOOL AT WESTFIELD AND ABOUT 1.0 MILE EAST OF THE CROSS ROAD AT EAGLE TOWN. 0.25 MILE EAST OF THE JUNCTION WITH A ROAD LEADING NORTH, 24 FEET SOUTHEAST OF THE SOUTHEAST CORNER OF A BARN, 4 FEET EAST OF A FENCE CORNER. 1.3 FEET SOUTH OF A WHITE WOODEN WITNESS POST AND ABOUT LEVEL WITH THE HIGHWAY. A STANDARD DISK, STAMPED B 112 1946 AND SET IN THE TOP OF A CONCRETE POST PROJECTING 5 INCHES ABOVE GROUND.

TBM 10
A CUT SQUARE IN THE SOUTH END OF THE MEDIAN IN THE ENTRANCE TO CHASE BANK. BEING SET ON THE NORTH SIDE OF WEST 161st STREET 340 FEET EAST OF THE CENTERLINE OF SPRINGMILL ROAD. ELEV=908.20

TBM 11
A CUT SQUARE IN THE SOUTH SIDE OF A CONCRETE TRAFFIC POLE AT THE SOUTHEAST CORNER OF THE INTERSECTION OF 161st STREET AND SPRINGMILL ROAD. ELEV 911.955

NOTES:

1. CONTRACTOR SHALL PROTECT AND NOT DESTROY THE PROPERTY CORNER MONUMENTS DURING CONSTRUCTION.
2. CONTRACTOR TO VERIFY LOCATION, SIZE AND DEPTH OF EXISTING UTILITIES PRIOR TO COMMENCING ANY CONSTRUCTION. CONTACT ENGINEER IF VARIATION EXISTS.
3. EXISTING INFORMATION IS FROM BANNING ENGINEERING; PROJECT NUMBER: 07053, PROJECT NAME: SPRINGMILL STATION, DATED 05–20–2015.

CAUTION !!
THE LOCATIONS OF ALL EXISTING UNDERGROUND UTILITIES SHOWN ON THIS PLAN ARE BASED UPON ABOVE GROUND EVIDENCE (including, but not limited to, manholes, inlets, valves, and marks made upon the ground by others) AND ARE SPECULATIVE IN NATURE. THERE MAY ALSO BE OTHER EXISTING UNDERGROUND UTILITIES FOR WHICH THERE IS NO ABOVE GROUND EVIDENCE OR FOR WHICH NO ABOVE GROUND EVIDENCE WAS OBSERVED. THE EXACT LOCATIONS OF SAID EXISTING UNDERGROUND UTILITIES SHALL BE VERIFIED BY THE CONTRACTOR PRIOR TO ANY AND ALL CONSTRUCTION.

1–800–382–5544
CALL TOLL FREE
– INDIANA UNDERGROUND –

CVS pharmacy

12,900 TYPE-A
CHAMFER DRIVE-THRU

STORE NUMBER: 10591
161ST STREET AND SPRING MILL ROAD
WESTFIELD, INDIANA

PROJECT TYPE: NEW STORE
DEAL TYPE:
CS PROJECT NUMBER: 071776

ARCHITECT OF RECORD

CONSULTANT:

AMERICAN STRUCTUREPOINT INC.
7260 SHADELAND STATION
INDIANAPOLIS, INDIANA 46256
p:(317) 547-5580 f:(317) 543-0270
www.structurepoint.com

DEVELOPER:

TMC Indiana 2, LLC
501 Pennsylvania Pkwy.
Suite 160
Indianapolis, Indiana 46280
Phone (317) 705–8800
Contact: Craig Forgey

SEAL:

APPROVAL PENDING
NOT FOR CONSTRUCTION

REVISIONS:

1	TAC COMMENTS	07–10–2015

PLANNING MGR:	JLW
DRAWING BY:	RCB
DATE:	05–29–2015
JOB NUMBER:	2007.01007

TITLE:
EROSION CONTROL PLAN

SHEET NUMBER:
C501

COMMENTS:

PRINT DATE: 7/15/15
PLOT SCALE: 1:2.5849
EDIT DATE: 7/9/15 – 4:12 PM EDITED BY: RBERGER DRAWING FILE: P:\N2007\1007\D. DRAWINGS\CIVIL\C. CONSTRUCTION DOCUMENTS\200701007.CE.C501.ECP.DWG

SITE NAME
The area scheduled for construction is known as "CVS Pharmacy" (hereinafter referred to as the "Project").

PROJECT LOCATION
The property is located at the southeast corner of 161st Street and Springmill Road in Westfield, IN at a latitude of 40°01'12.8" N and a longitude of 86°09'49.4" W.

OWNER'S INFORMATION
Name: T.M. Indiana 2, LLC
Address: 501 Pennsylvania Pkwy., Suite 160 Indianapolis, IN 46280
Representative: Craig Forgey
Title: Regional Representative
Telephone: 317-705-8800

OPERATOR'S INFORMATION
Name: T.M. Indiana 2, LLC
Address: 501 Pennsylvania Pkwy., Suite 160 Indianapolis, IN 46280
Representative: Craig Forgey
Title: Regional Representative
Telephone: 317-705-8800

NOTICE OF INTENT
All parties defined as owners or operators must submit a Notice of Intent (NOI) at least 48 hours prior to commencement of on-site construction activities. Submittal of late NOI's is not prohibited; however, authorization under the construction general permit is only for discharges that occur after permit coverage is granted. Unpermitted discharges may be subject to enforcement actions by the EPA. For the purposes of this permit, an operator is defined as any party meeting either of the following requirements:

a) The party has operational control over construction plans and specifications, including the ability to make modifications to those plans and specifications.
b) The party has day-to-day operational control of those activities at a project that are necessary to ensure compliance with a stormwater pollution prevention plan for the site or other permit conditions.

A2 11" x 17" PLAT

Refer to the Site Plan.

A3 PROJECT NARRATIVE

The project consists of a 12,900 sqft proposed CVS/Pharmacy on 1.324± acres on the southeast corner of 161st Street and Springmill Road in Westfield, IN. The site will consist of constructing drives, parking lot, utilities and building.

A4 VICINITY MAP

Refer to Title Sheet

A5 LEGAL DESCRIPTION OF THE PROJECT SITE

Refer to Existing Topography Sheet.

A6 LOCATION OF ALL LOTS AND PROPOSED SITE IMPROVEMENTS

The site will not be subdivided; therefore, there are no individual lots on the property. The proposed site improvements are shown on the included plans.

A7 HYDROLOGIC UNIT CODE (HUC)

05120201120060 and 05120201090030

A8 STATE AND FEDERAL WATER QUALITY PERMITS

Not applicable

A9 SPECIFIC POINT WHERE STORMWATER DISCHARGE WILL LEAVE THE SITE

STORMWATER DRAINAGE FROM THE SITE WILL BE CONVEYED BY A PROPOSED STORM SEWER TO THE SOUTHEAST CORNER OF THE SITE.

A10 LOCATION AND NAME OF ALL WETLANDS, LAKES, AND WATERCOURSES ON AND ADJACENT TO THE SITE

NO WETLANDS, LAKES OR WATERCOURSES HAVE BEEN IDENTIFIED ON THE SITE THAT MAY BE IMPACTED BY STORMWATER DISCHARGES AS A RESULT OF THE PROPOSED CONSTRUCTION ACTIVITIES.

A11 IDENTIFICATION OF ALL RECEIVING WATERS

Unnamed Tributary to Cool Creek is the ultimate receiving water for the project area.

A12 IDENTIFICATION OF ALL POTENTIAL DISCHARGES TO GROUND WATER

There are no locations on site where surface water may be discharged into ground water.

A13 100-YEAR FLOODPLAINS, FLOODWAYS, AND FLOODWAY FRINGES

The lot is not located in a floodplain as indicated on the Hamilton County, IN, Flood Insurance Rate Map 18057C0120G dated November 19, 2014.

A14 PRE-CONSTRUCTION AND POST-CONSTRUCTION ESTIMATE OF PEAK DISCHARGE

Pre-construction 10-year discharge: 3.11 cfs
Post-construction 10-year discharge: 6.15 cfs

A15 ADJACENT LAND USE

North: Commercial
East: Commercial
South: Commercial
West: Agricultural

A16 LOCATIONS AND APPROXIMATE BOUNDARIES OF ALL DISTURBED AREAS

Approximate boundaries of disturbed areas are as identified on the Erosion Control Plan.

A17 IDENTIFICATION OF EXISTING VEGETATIVE COVER

Approximate areas of existing vegetative cover are as shown on the existing topography sheets.

A18 SOILS MAP INCLUDING SOIL DESCRIPTION AND LIMITATIONS

The Natural Resources Conservation Service (NRCS) Web Soil Survey of Clark County, Indiana, indicates Urban land - Udarents loamy substratum are located on the site.

The on-site soil will be treated as recommended by the geotechnical engineer if the conditions are unsuitable for the proposed construction. Remedial treatments may include, but are not limited to, removal of unsuitable soil and backfilling with engineered material, installation of a geofabric within or under the pavement system, or treatment of the subgrade with lime.

A19 LOCATIONS, SIZE, AND DIMENSIONS FOR PROPOSED STORMWATER SYSTEMS

Locations of stormwater systems: Refer to the Utility Plan or Storm Sewer Plan and Profiles
Size of storm sewer: Refer to the Utility Plan or Storm Sewer Plan and Profiles
Details of storm inlets and manholes: Refer to Site Details

A20 PLANS FOR ANY OFF-SITE CONSTRUCTION ACTIVITIES ASSOCIATED WITH THIS PROJECT

There will be no offsite construction activities associated with this project.

A21 LOCATIONS OF PROPOSED SOIL STOCKPILES AND/OR BORROW/DISPOSAL

Excess soil shall be immediately stockpiled, surrounded with silt fence and seeded and/or removed from the construction site in accordance with all applicable laws. If topsoil stockpiles are anticipated for this project, they are shown on the Erosion Control Plan.

A22 EXISTING SITE TOPOGRAPHY

Refer to the Existing Topography Plan

A23 PROPOSED FINAL SITE TOPOGRAPHY

Refer to the Grading Plan

B1 DESCRIPTION OF POTENTIAL POLLUTANT SOURCES ASSOCIATED WITH CONSTRUCTION ACTIVITIES

The following potential pollutant sources may be associated with construction activities on site:

1. Material storage areas (more specifically described below)
2. Construction waste material
3. Fuel storage areas and fueling stations
4. Exposed soils
5. Leaking vehicles and equipment
6. Sanitary waste from temporary toilet facilities
7. Litter
8. Windblown dust
9. Soil tracking off site from construction equipment

The following construction materials may be staged or stored on site at various points during development of the site:

1. Structural fill
2. Pavement Base Stone
3. HDPE, PVC, RCP or Ductile Iron pipe
4. Precast concrete, HDPE or PVC drainage and sanitary structures
5. Rock rip-rap

B2 SEQUENCE DESCRIBING STORMWATER QUALITY MEASURE IMPLEMENTATION RELATIVE TO LAND-DISTURBING ACTIVITIES

1. Schedule pre-construction meeting with local stormwater authority.
2. Install construction entrance.
3. Utilize the gravel construction entrance for installation of the perimeter silt fence. Add stone if needed. Post the NOI at the entrance. Add protection measures to existing inlets.
4. Install staging area, fueling station, material storage area and concrete truck washout.
5. Strip the top soil and grade.
6. Complete the cut and fills on the site. Final grade and seed the pond slopes. Install check dams or stabilize the slopes with erosion control blankets.
7. Prior to building construction install stone surface for paved areas.
8. Building pads left dormant for more than 15 days, must be temporarily seeded.
9. Start building construction. Install staging area for building materials.
10. Install storm sewer and other utilities. Provide inlet protection immediately upon completion of the inlet and install riprap outlet protection prior to installing outlets. Final grade and stabilize slopes when inlets are functioning.
11. Seed the perimeter of the site.
12. Complete utility installation, curbs, paving and building construction.
13. Install landscaping plant material and stabilize all disturbed areas.
14. Remove all erosion and sediment control practices when areas have a uniform grass cover.

B3 STABLE CONSTRUCTION ENTRANCE LOCATIONS AND SPECIFICATIONS

Construction entrances will be in place prior to any site construction or demolition. Entrances are shown on the Erosion Control Plan, refer to the Erosion Control Details for details.

B4 SEDIMENT CONTROL MEASURES FOR SHEET FLOW AREAS

Sheet flow areas will be protected by seed and mulch or hydroseeding. Erosion control blankets will be installed on sloped areas where the slope exceeds 6:1 (horizontal to vertical). Silt Fencing will be utilized to prevent sedimentation from leaving the site. Refer to the Erosion Control Plan for locations and the Erosion Control Details for details.

B5 SEDIMENT CONTROL MEASURES FOR CONCENTRATED FLOW AREAS

Proposed swales will be stabilized with erosion control blankets, and rock donuts will be installed to slow runoff to inlets. Straw bales and silt fences will not be allowed as concentrated flow protection measures. Refer to the Erosion Control Plan for locations and the Erosion Control Details for details.

B6 STORM SEWER INLET PROTECTION MEASURE LOCATIONS AND SPECIFICATIONS

The contractor shall install appropriate inlet protection measures at each inlet. Refer to the Erosion Control Plan for locations and the Erosion Control Details for details. Straw bales will not be allowed as inlet protection measures.

B7 RUNOFF CONTROL MEASURES

None.

B8 STORMWATER OUTLET PROTECTION SPECIFICATIONS

Stormwater outlets will be protected by riprap aprons to prevent scour erosion. Refer to the Erosion Control Plan for locations and the Erosion Control Details for details.

B9 GRADE STABILIZATION STRUCTURE LOCATIONS AND SPECIFICATIONS

Rip rap aprons at outlets will be utilized to prevent grade destabilization. Refer to the Erosion Control Plan for locations and the Erosion Control Details for details.

B10 LOCATION, DIMENSIONS, SPECIFICATIONS, AND CONSTRUCTION DETAILS OF EACH STORMWATER QUALITY MEASURE

Refer to the Erosion Control Plan for locations of each stormwater quality measure and the Erosion Control Details.

B11 TEMPORARY SURFACE STABILIZATION METHODS APPROPRIATE FOR EACH SEASON

Surface stabilization is required on any bare or thinly vegetated area that is scheduled or likely to remain inactive for a period of 15 days or more.
Refer to the Temporary Seeding Detail within Erosion Control Details for specifics on soil amendments, seed mixtures and mulching.

B12 PERMANENT SURFACE STABILIZATION SPECIFICATIONS

A. Loosen lawn area to a minimum depth of 6 inches. Mix soil amendments and fertilizers with topsoil at rates specified. Organic soil amendments such as peat, compost or manure shall be applied at 2" depth evenly over soil and incorporated into the top 6" of topsoil. Provide fertilizer with percentage of nitrogen required to provide not less than 1 pound of actual nitrogen per 1,000 sq. ft. of lawn area and not less than 4 percent phosphoric acid and 2 percent potassium. At least 50 percent of nitrogen to be organic form. Delay mixing of fertilizer if planting will not follow placing of planting soil within a few days.
B. Fertilizer for lawns: provide a fast release fertilizer with a composition of 1 lb per 1,000 sq. ft. of actual nitrogen, 4 percent phosphorous, and 2 percent potassium by weight.
C. Slow-release fertilizer for trees and shrubs: granular fertilizer consisting of 50 percent water-insoluble nitrogen, phosphorous and potassium made up of a composition by weight of 5 percent
D. Grade lawn and grass areas to a smooth, even surface with loose, uniformly fine texture. Limit fine grading to areas that can be planted within immediate future. Remove trash, debris, stones larger than 1 inch diameter, and other objects that may interfere with planting or maintenance operations. Sow seed using a spreader or seeding machine. Do not seed when wind velocity exceeds 5 miles per hour.
E. Distribute seed evenly over entire area by sowing equal quantity in 2 directions at right angles to each other.
F. Rake seed lightly into top 1/8 inch of soil, roll lightly, and water with a fine spray.
G. Install erosion control blankets as indicated on the plan.
H. Protect seeded areas against erosion by spreading clean, seed-free straw mulch after completion of seeding operations. Spread uniformly to form a continuous blanket not less than 1-1/2 inches loose measurements over seeded areas.
I. Water newly planted lawn areas and keep moist until new grass is established. Immediately repair any lawn areas disturbed by construction activities including tree and shrub installation.
J. Refer to the Permanent Seeding Details within the Erosion Control Detail Sheet, for timing of permanent seeding, grass seed specifications and mulching specifications.

B13 MATERIAL HANDLING AND SPILL PREVENTION PLAN

Solid Waste Disposal
No solid material, including building materials, is permitted to be discharged to surface waters or buried on site. All solid waste materials, including disposable materials incidental to the construction activity, must be collected in containers or closed dumpsters. The collection containers must be emptied periodically and the collected material hauled to a landfill permitted by the State and/or appropriate local municipality to accept the waste for disposal.

A foreman or supervisor should be designated in writing to oversee, enforce, and instruct construction workers on proper solid waste procedures.

Hazardous Waste
Whenever possible, minimize the use of hazardous materials and generation of hazardous wastes. All hazardous waste materials will be disposed in the manner specified by federal, state, or local regulations or by the manufacturer.

Use containment berms in fueling and maintenance areas and where potential for spills is high.

A foreman or supervisor should be designated in writing to oversee, enforce and instruct construction workers on proper hazardous waste procedures. The location of any hazardous waste storage areas should be indicated on the stormwater pollution prevention plan by the operator following on-site location of the facility.

Dust Control/Off-Site Vehicle Tracking
During construction, water trucks should be used, as needed, by each contractor or subcontractor to reduce dust. After construction, the site should be stabilized to reduce dust.

Construction traffic should enter and exit the site at a Construction Entrance with a rock pad or equivalent device. The purpose of the rock pad is to minimize the amount of soil and mud that is tracked onto existing streets. If sediment escapes the construction site, off-site accumulations of sediment must be removed at a frequency sufficient to minimize offsite impacts.

Sanitary/Septic
Contractors and subcontractors must comply with all state and local sanitary sewer, portable toilet, or septic system regulations. Sanitary facilities shall be provided at the site by each contractor or subcontractor throughout construction activities. The sanitary facilities should be utilized by all construction personnel and be serviced regularly. All expenses associated with providing sanitary facilities are the responsibility of the contractors and subcontractors. The location of any sanitary facilities should be indicated on the stormwater pollution prevention plan by the operator following on-site location of said facilities.

Water Source
Water used to establish and maintain grass, to control dust, and for other construction purposes must originate from a public water supply or private well approved by the State or local health department.

Equipment Fueling and Storage Areas
Equipment fueling, maintenance, and cleaning should only be completed in protected areas (i.e., bermed area). Leaking equipment and maintenance fluids will be collected and not allowed to discharge onto soil where they may be washed away during a rain event.

Equipment wash down (except for wheel washes) should take place within an area surrounded by a berm. The use of detergents is prohibited.

Hazardous Material Storage
Chemicals, paints, solvents, fertilizers, and other toxic or hazardous materials should be stored in their original containers (if original container is not resealable, store the products in clearly labeled, waterproof containers). Except during application, the containers should be kept in trucks or in bermed areas within covered storage facilities. Runoff containing such materials shall be collected, removed from the site, and disposed of in accordance with the federal, state, and local regulations.

As may be required by federal, state or local regulations, the Contractor should have a Hazardous Materials Management Plan and/or Hazardous Materials Spill and Prevention Program in place. A foreman or supervisor should be designated in writing to oversee, enforce, and instruct construction workers on proper hazardous materials storage and handling procedures. The location of any hazardous material storage areas should be indicated on the stormwater pollution prevention plan by the operator following on-site location of the storage areas.

Material Handling and Spill Prevention
Discharge of hazardous substances or oil into stormwater is subject to reporting requirements. In the event of a spill of a hazardous substance, the operator is required to notify the National Response Center (1-800-424-8802) to properly report the spill. In addition, the operator shall submit a written description of the release (including the type and amount of material released, the date of the release, the circumstances of the release, and the steps to be taken to prevent future spills) to the local governing authority. The SWPPP must be revised within 14 calendar days after the release to reflect the release, stating the information above along with modifications to minimize the possibility of future occurrences. Each contractor and subcontractor is responsible for complying with these reporting requirements.

Concrete Washout
All concrete trucks waste material shall be completely contained and disposed in accordance with all local, state, and federal regulations. A pit or container is required when cleaning concrete chutes.

Spill Response Plan
Minor - Small spills that typically involve oil, gasoline, paint, hydraulic fluid, etc., can be controlled by the first responder at the discovery of the spill.
- Contain spill to prevent material from entering storm or ground water. Do not flush with water or bury.
- Use absorbent material to clean-up spill material and any subsequently contaminated soil and dispose of properly.

Semi-Significant Spills - Approximately ten gallons or less of pollutant with no contamination of ground or surface waters. Minor spills can be generally controlled by the first responder with help from other site personnel. This response may require other operations to stop to make sure the spill is quickly and safely addressed. At the discovery of the spill:
- Contain spill to prevent material from entering storm or ground water. Do not flush with water or bury.
- Use absorbent material to clean-up spills and dispose of properly. Spills on impervious surfaces should be disposed of as soon as possible to prevent migration deeper into the soil and groundwater. Dispose of contaminated soils or absorbents properly.
- Contact 911 if the spill could be a safety issue.
- Contact supervisors and designated site inspectors immediately.
- Contaminated solids are to be removed to an approved landfill.

Major or Hazardous Spills - More than ten gallons, there is the potential for death, injury or illness to humans or animals, or has the potential for surface or groundwater pollution.
- Control or contain the spill without risking bodily harm. Temporarily plug storm drains if possible to prevent migration of the spill into the stormwater system.
- Immediately contact the local Fire Department at 911 to report any hazardous material spill.
- Contact supervisors and designated site inspectors immediately. Governing authorities responsible for storm water facilities should be contacted as well. The contractor is responsible for having these contact numbers available at the job site. A written report should be submitted to the owner as soon as possible.
- As soon as possible but within 2 hours of discovery, contact the local agency responsible for spill management. The following information should be noted for future reports to the agency:
  - Name, address and phone number of person making the spill report
  - The location of the spill
  - The time of the spill
  - Identification of the spilled substance
  - Approximate quantity of the substance that has been spilled or may be further spilled
  - The duration and source of the spill
  - Name and location of the damaged waters
  - Name of spill response organization
  - What measures were taken in the spill response
  - Other information that may be significant

Additional regulations or requirements may be present. A spill response professional should be consulted to make sure all appropriate and required steps have been taken. Contaminated solids should only be removed from the site after approval is given by the appropriate agency.

B14 MONITORING AND MAINTENANCE GUIDELINES FOR EACH PROPOSED STORMWATER QUALITY MEASURE

Inspection Schedule/Reporting
All impacted areas, as well as all erosion and sediment control devices, will be inspected every seven (7) calendar days and within 24 hours after a rainfall of 0.5 inch or greater. Where sites have been final or temporarily stabilized or on sites where runoff is unlikely due to winter conditions (e.g., site is covered with snow, ice, or frozen ground exists), such inspections shall be conducted at least once every month.

Inspections shall be conducted and a written report prepared, by a designated and qualified person familiar with the USEPA NPDES Storm Water General Permit, this SWPPP, and the Project.

Inspection reports shall be completed including scope of the inspection, name(s) and qualifications of personnel making the inspection, the date of the inspection, observations relating to the implementation of the SWPPP, and any actions taken as a result of incidents of noncompliance noted during the inspection. The inspection report should state whether the site was in compliance or identify any incidents of noncompliance. The contractor shall keep a copy of the inspection reports on site and permanently for a period of two years following construction. The on-site reports may be requested by inspections conducted by the local governing authority.

Construction Entrance
Locations where vehicles exit the site shall be inspected for evidence of off-site sediment tracking. Each contractor and subcontractor shall be responsible for maintaining the Construction Entrance and other controls as described in this SWPPP.

Material Storage Inspections
Inspectors must evaluate areas used for storage of materials that are exposed to precipitation. The purpose is to ensure that materials are protected and/or impounded so that pollutants cannot discharge from storage areas. Off-site material storage areas used solely by the subject project are considered to be part of the project and must be included in the erosion control plans and the site inspection reports.

Soil Stabilization Inspections
Seeded areas will be inspected to confirm that a healthy stand of vegetation is maintained. The site has achieved final stabilization once all areas are covered with pavement or have a stand of vegetation with at least 70% of the background vegetation density. The density of 70% or greater must be maintained to be considered as stabilized. The operator or their representative will water, fertilize, and reseed disturbed areas as needed to achieve this goal.

Erosion and Sediment Control Inspections
All controls should be inspected at least once every seven (7) calendar days and following any storm event of 0.5 inch or greater. The following is a list of inspection/maintenance practices that will be used for specific controls:

1. Geotextiles/Erosion Control Mats: Missing or loose matting must be replaced or re-anchored.
2. Inlet Protection: If silt fence inlet protection is to be used, sediment should be removed when it reaches approximately one-half the height of the fence. If a sump is used, sediment should be removed when the volume of the basin is reduced by 50%.
3. Diversion Swales: Clean debris or other obstructions as needed. Damage from storms or normal construction activities (i.e., tire ruts) shall be repaired immediately.
4. Mulching: Inspect for thin or bare spots caused by natural decomposition or weather-related events. Mulch in high traffic areas should be replaced on a regular basis to maintain uniform protection.
5. Sediment Trap: Accumulated silt shall be removed and the basin shall be re-graded to its original dimensions at such point that the capacity of the impoundment has been reduced to one-half of its original storage capacity. The removed sediment shall be stockpiled or redistributed in areas that are protected from erosion.
6. Sediment Basin: Inspect frequently to check for damage and to ensure obstructions are not diminishing the effectiveness of the structures. Sediment shall be removed and the basin shall be re-graded to its original dimensions at such point that the capacity of the impoundment has been reduced to 20% of its original storage capacity. The removed sediment shall be stockpiled or redistributed in areas that are protected from erosion.
7. Silt Fence: Removal of built-up sediment will occur when the sediment reaches one-third the height of the fence.
8. Stabilized Construction Entrance: Periodic re-grading and top dressing with additional stone.
9. Straw Bales: Replace straw bales that show signs of deterioration.
10. Vegetation: Protect newly seeded areas from excessive runoff and traffic until vegetation is established. Establish a watering and fertilizing schedule.
11. Good Housekeeping: Litter, construction debris, and construction chemicals exposed to stormwater shall be prevented from becoming a pollutant source for stormwater discharges through screening of outfalls and daily pickup of litter.

In the event that sediment escapes the construction site, off-site accumulations of sediment must be removed at a frequency sufficient to minimize adverse impacts. An example of this may be the situation where sediment has washed into the street and could be carried into the storm sewers by the next rainfall and/or pose a safety hazard to users of public streets. Modifications/Revisions to SWPPP.

Based on inspection results, any necessary modification to this SWPPP shall be implemented within seven calendar days of the inspection. A modification is necessary if a control measure or operational procedure does not provide adequate pollutant control. All revisions shall be recorded on a Record of Revisions within seven calendar days of the inspection.

It is the responsibility of the operator to maintain effective pollutant discharge controls. Physical site conditions or contractor/subcontractor practices could make it necessary to install more controls than were originally planned. For example, localized concentrations of surface runoff or unusually steep areas could require additional silt barrier or other structural controls. Assessing the need for and installing additional controls will be a continuing contractor/subcontractor responsibility until final stabilization is achieved. Contractors and subcontractors implementing this SWPPP must remain alert to the need to periodically refine and update this SWPPP in order to accomplish the intended goals.

Notice of Termination
Compliance of the site with the General Construction Permit remains the responsibility of all operators that have submitted an NOI until such time as they have submitted a Notice of Termination (NOT). The permittee's authorization to discharge under the General Construction Permit terminates at midnight of the day the NOT is signed.

All permittees must submit an NOT within thirty (30) days after one or more of the following conditions have been met:

1. Final stabilization has been achieved on all portions of the site for which the permittee was responsible.
2. Another operator/permittee has assumed control over all areas of the site that have not been finally stabilized.
3. In residential construction operations, temporary stabilization has been completed and the residence has been transferred to the homeowner.

B15 EROSION AND SEDIMENT CONTROL SPECIFICATIONS FOR INDIVIDUAL BUILDING LOTS

Since the entire site is under a single ownership, there are not any individual building lots.

C1 DESCRIPTION OF POLLUTANTS AND THEIR SOURCES ASSOCIATED WITH THE PROPOSED LAND USE

The proposed land use is a retail pharmacy. The pollutants and sources of each pollutant normally expected from this type of land use are listed below:

Pollutant Source: Passenger vehicles, delivery vehicles.
Type of Pollutant: Oil, gasoline, diesel fuel, any hydrocarbon associated with vehicular fuels and lubricants, grease, antifreeze, windshield cleaner solution, brake fluid, brake dust, rubber, glass, metal and plastic fragments, grit, road de-icing materials.

Pollutant Source: Building
Type of Pollutant: Cleaning solutions or solvents, leaks from HVAC equipment, grit from roof drainage, aggregate or rubber fragments from roofing system.

Pollutant Source: Trash dumpster
Type of Pollutant: Cleaning solutions or solvents, litter (paper, plastic, general refuse associated with distribution operations), uneaten food products, bacteria.

Pollutant Source: Parking lot
Type of Pollutant: Any pollutant associated with vehicular sources, grit from asphalt wearing surface, bituminous compounds from periodic maintenance (sealing, resurfacing and patching), pavement de-icing materials, paint fragments from parking stall stripes, concrete fragments, wind-blown litter from off-site sources, elevated water temperatures from contact with impervious surfaces.

Pollutant Source: Lawn and landscape areas
Type of Pollutant: Fertilizers, soil, organic material (leaves, mulch, grass clippings)

C2 SEQUENCE DESCRIBING STORMWATER QUALITY MEASURE IMPLEMENTATION

Permanent vegetation, Dry Detention Basin, and good housekeeping measures will remain after construction is completed. The purpose of the these measures is to provide post-construction stormwater quality.

C3 DESCRIPTION OF PROPOSED POST-CONSTRUCTION STORMWATER QUALITY MEASURES

Permanent Vegetation
Topsoil will be placed in lawn areas and seeded with grass, and graded not to exceed 3:1 slopes. Proposed landscape trees and shrubs will also be added. These Bio areas will act as a natural filter strip to help improve storm water quality. The vegetated areas will slow the velocities of storm water runoff, reduce sediment runoff, and reduce problems associated with mud or dust from bare soils.

Dry Detention Basin
Basins collect, temporarily hold, and gradually release excess storm water from storm events. Detention is achieved through the use of an outlet structure that regulates the rate of storm water outflow.

Good Housekeeping Measures
Good Housekeeping measures such as regular street sweeping, installation of trash receptacles, and reduction in fertilizer overspray can be incorporated by the owner and/or occupant.

C4 LOCATION, DIMENSIONS, SPECIFICATIONS, AND CONSTRUCTION DETAILS OF EACH STORMWATER QUALITY MEASURE

The following items are stormwater quality measures that will be installed during construction. These items will remain in place after construction is completed and are considered to serve an incidental function as post-construction stormwater quality BMPs.

Permanent Vegetation
Permanent vegetation will be planted in the parking lot islands and around the perimeter of the property.

Dry Detention Basin
Dry Detention Basin will be located at the southeast corner of the property.

C5 DESCRIPTION OF MAINTENANCE GUIDELINES FOR POST-CONSTRUCTION STORMWATER QUALITY MEASURES

Maintenance requirements for the stormwater quality measures which will remain in place after construction is complete, are described below.

Permanent Vegetation
Permanent vegetation requires little maintenance if properly designed. Mow as needed during the growing season; inspect for erosion problems twice during the first year, annually thereafter, and remove trash and debris annually or more frequently if needed.

Detention Ponds (Wet or Dry)
Inspect periodically as needed or at least every six months. Sediment shall be disposed of off site in accordance with all applicable laws. Areas that show sign of erosion shall be stabilized with erosion control blanket and/or seed as necessary.

Good Housekeeping Measures
Good Housekeeping measures such as inspecting inlet castings, storm structures, and installation of trash receptacles to keep storm structures clear of trash and debris. Remove trash and debris annually or more frequently if needed.

PRINT DATE: 7/15/15
PLOT SCALE: 1:2.5849
EDIT DATE: 6/2/15 - 9:31 AM EDITED BY: RBERGER DRAWING FILE: P:\IN2007\1007\D. DRAWINGS\CIVIL\C. CONSTRUCTION DOCUMENTS\2007010007.CE.C510.SWPPP.DWG

CVS pharmacy

12,900 TYPE-A
CHAMFER DRIVE-THRU

STORE NUMBER: 10591
161ST STREET AND SPRING MILL ROAD
WESTFIELD, INDIANA

PROJECT TYPE: NEW STORE
DEAL TYPE:
CS PROJECT NUMBER: 071776

ARCHITECT OF RECORD

CONSULTANT:

AMERICAN STRUCTUREPOINT INC.
7260 SHADELAND STATION
INDIANAPOLIS, INDIANA 46256
p:(317) 547-5580 f:(317) 543-0270
www.structurepoint.com

DEVELOPER:

TMC Indiana 2, LLC
501 Pennsylvania Pkwy.
Suite 160
Indianapolis, Indiana 46280
Phone (317) 705-8800
Contact: Craig Forgey

SEAL:

APPROVAL PENDING
NOT FOR CONSTRUCTION

REVISIONS:

1	TAC COMMENTS	07-10-2015

PLANNING MGR: JLW
DRAWING BY: RCB
DATE: 05-29-2015
JOB NUMBER: 2007.01007

TITLE:
STORMWATER POLLUTION PREVENTION PLAN

SHEET NUMBER:
C510

COMMENTS:

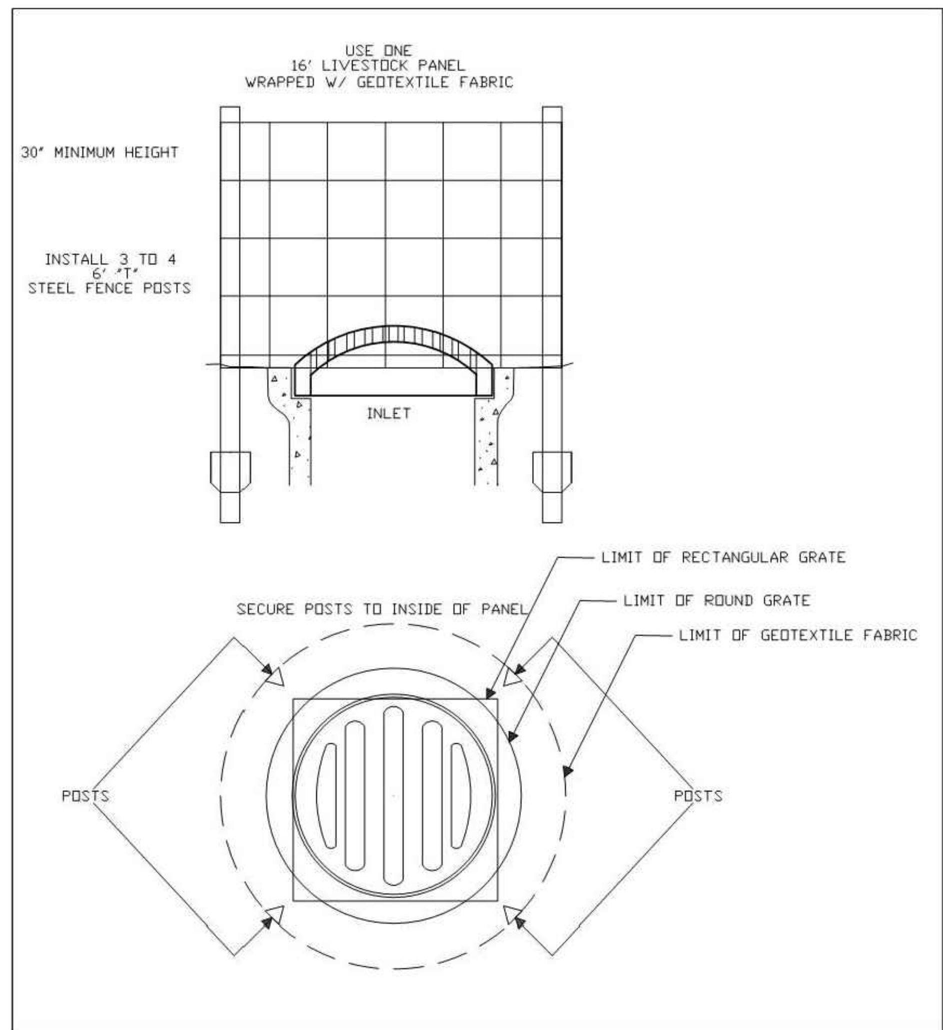

TEMPORARY DITCH INLET PROTECTION

CITY OF WESTFIELD, INDIANA

4/1/13
DATE

FIGURE EC-1

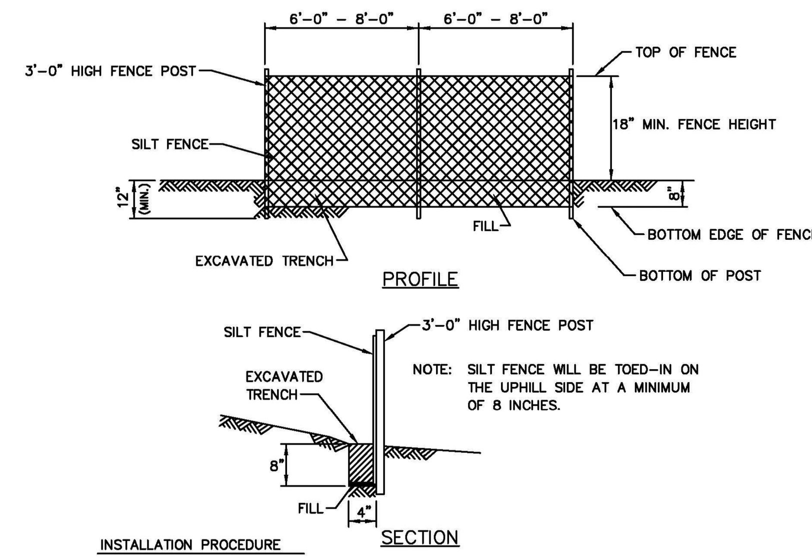

INSTALLATION PROCEDURE

1. 2" x 2" X 36" HARDWOOD OR STEEL FENCE POSTS ARE INSTALLED 6' APART (w/ EXTRA STRENGTH FABRIC WITHOUT WIRE BACKING) OR 8' APART (w/ WIRE BACKING), ON A SLIGHT ANGLE TOWARD THE ANTICIPATED RUNOFF SOURCE.
2. A TRENCH 4" WIDE BY 8" DEEP IS DUG ALONG THE UPHILL SIDE OF THE FENCE LINE.
3. THE SILT FENCE IS UNROLLED AND LAID OUT ALONG THE FENCE LINE.
4. AT THIS TIME THE LOWER 8" OF THE FENCE IS LAID IN THE TRENCH AND CURLED TOWARD THE EROSION SOURCE. THE TRENCH IS THEN BACKFILLED WITH SOIL.

SILT FENCE DETAIL

CITY OF WESTFIELD, INDIANA

4/1/13
DATE

FIGURE EC-4

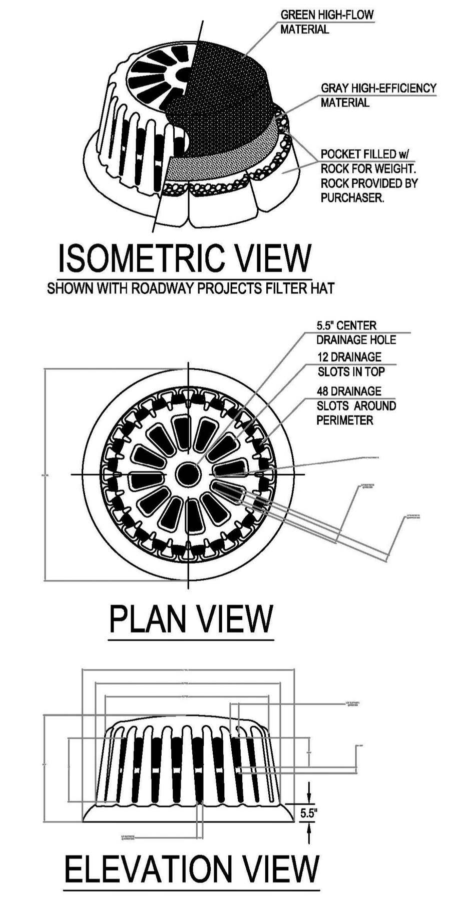

REPLACEMENT FILTERS: MODEL # R-140

FILTER OPTIONS
FILTER HAT IS AVAILABLE IN THREE OPTIONS:
1) ALL HIGH-FLOW MATERIAL
2) ALL HIGH-EFFICIENCY MATERIAL
3) HIGH-FLOW MATERIAL ON TOP HALF OF HAT, HIGH-EFFICIENCY MATERIAL ON BOTTOM HALF (THIS FILTER COVER IS RECOMMENDED FOR ALL ROADWAY PROJECTS.)
IT IS THE PURCHASERS RESPONSIBILITY TO PURCHASE APPROPRIATE FILTER HAT. PURCHASER SHALL PROVIDE ROCK FOR FILTER POCKETS.

FILTER HAT INSTALLATION
FILTER HAT SLIDES DIRECTLY OVER FILTER FRAME. TO KEEP FILTER FRAME IN PLACE OVER STORM STRUCTURE, ROCK POCKETS ARE SEWN DIRECTLY INTO FILTER HAT MATERIAL. EVERY FILTER HAT COMES IN ONE PIECE FOR EASY INSTALLATION.

MAINTENANCE
ALL TEMPORARY EROSION, SEDIMENTATION, & POLLUTION CONTROL PRACTICES SHOULD BE INSPECTED DAILY. CONTRACTOR SHALL REMOVE SEDIMENT AND DISPOSE OF IN A PROPER MANNER. INSPECT R-100A DAILY FOR CUTS, ABRASIONS, AND PROPER INSTALLATION. REPLACE OR REPOSITION AS NECESSARY.

SPECIFICATIONS
FILTER FABRIC SILT-SAVER HAT SHALL BE BASED ON DESIGN PROFESSIONAL'S SPECIFICATIONS.

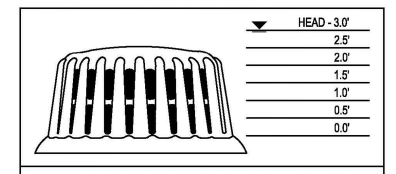

FRAME & FILTER DISCHARGE ANALYSIS

HEAD (FT)	EQUATION USED	OPENING AREA (SF)	FRAME FLOW (CFS)	FILTER AREA (SF)	FILTERED FLOW (CFS)
0.5	O	2.1	7	6	2
1.0	O	3.9	19	12	3
1.5	O	7.0	41	18	5
2.0	O	8.0	54	24	7
2.5	O	9.2	70	30	9
3.0	O	9.2	77	—	77

DUE TO NARROW SLOT, A TRANSITION WILL OCCUR BETWEEN WEIR AND ORIFICE CONDITIONS. ORIFICE FLOW WILL PROVIDE A MORE CONSERVATIVE ESTIMATE OF FLOW, THEREFORE THE LESSER OF THE ORIFICE AND WEIR FLOWS WILL BE USED FOR EACH STAGE CALCULATION.

FILTER MATERIAL ALLOWS 129 gpm/SF OR 0.29cfs/SF
ORIFICE EQUATION (O) = Q=0.6A(2gh)^0.5
P = FEET PERIMETER
h = HEAD IN FEET
Q = CAPACITY IN cfs
A = FREE OPEN AREA OF FRAME
g = 32.2 FEET-PER-SECOND/SECOND

SILT SAVER INLET PROTECTION MODEL #R-100

CITY OF WESTFIELD, INDIANA

4/1/14
DATE

FIGURE EC-15

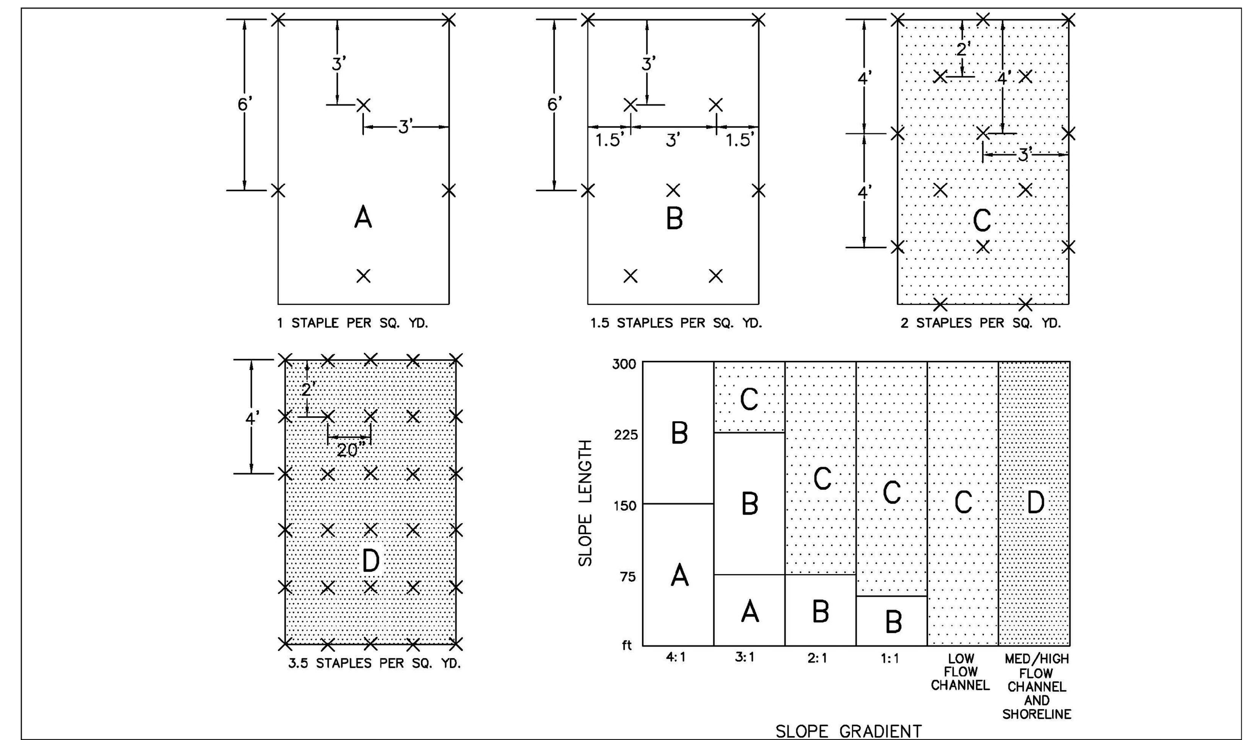

EROSION CONTROL MAT – STAPLE GUIDE

CITY OF WESTFIELD, INDIANA

4/1/14
DATE

FIGURE EC-3

GENERAL NOTES

1. PREPARE SOIL BEFORE INSTALLING BLANKETS, INCLUDING APPLICATION OF LIME, FERTILIZER AND SEED.
2. BEGIN AT THE TOP OF THE CHANNEL BY ANCHORING THE BLANKET IN A 6" DEEP x 6" WIDE TRENCH. BACKFILL AND COMPACT THE TRENCH AFTER STAPLING.
3. ROLL CENTER BLANKET IN DIRECTION OF WATER FLOW ON BOTTOM OF CHANNEL.
4. PLACE BLANKETS END OVER END (SHINGLE STYLE) WITH A 6" OVERLAP. USE A DOUBLE ROW OF STAGGERED STAPLES 4" APART TO SECURE BLANKETS.
5. FULL LENGTH EDGE OF BLANKETS AT TOP OF SIDE SLOPES MUST BE ANCHORED IN 6" DEEP x 6" WIDE TRENCH. BACKFILL AND COMPACT THE TRENCH AFTER STAPLING.
6. BLANKETS ON SIDE SLOPES MUST BE OVERLAPPED 4" OVER THE CENTER BLANKET AND STAPLED.
7. IN MEDIUM/HIGH FLOW CHANNEL APPLICATIONS, A STAPLE CHECK SLOT IS RECOMMENDED AT 30 TO 40 FOOT INTERVALS. USE A ROW OF STAPLES 4" APART OVER ENTIRE WIDTH OF THE CHANNEL. PLACE A SECOND ROW 4" BELOW THE FIRST ROW IN A STAGGERED PATTERN.
8. THE TERMINAL END OF THE BLANKETS MUST BE ANCHORED IN A 6" DEEP x 6" WIDE TRENCH. BACKFILL AND COMPACT THE TRENCH AFTER STAPLING.
8. BLANKET TYPE TO BE NORTH AMERICAN GREEN S75 OR S150 (OR SIMILAR) DEPENDING ON SLOPE

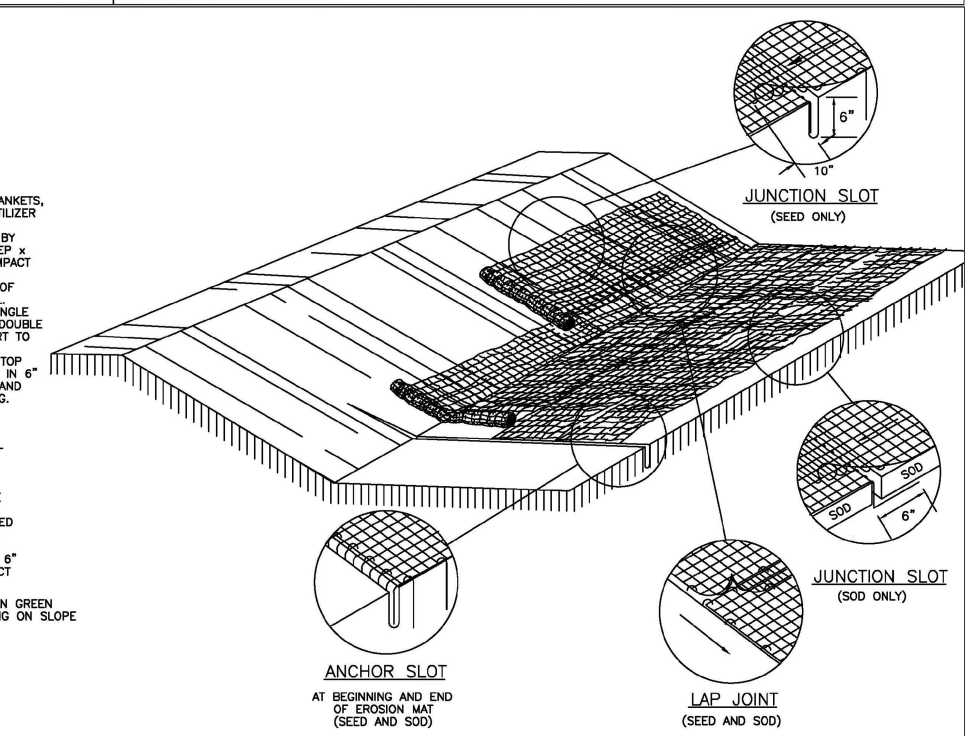

EROSION CONTROL MAT – SLOPE DETAIL

CITY OF WESTFIELD, INDIANA

4/1/14
DATE

FIGURE EC-2

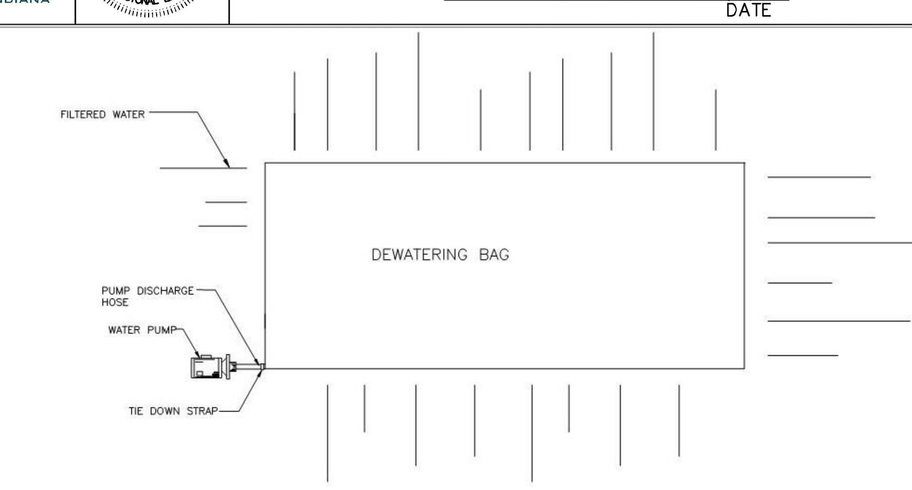

Dewatering Filtration Bag Size	Maximum Gallon Per Minute Capacity
4' x 6'	228
7.5' x 7.5'	534
10' x 10'	950
10' x 15'	1,425
15' x 15'	2,137
15' x 30'	4,275
15' x 65'	9,262

INSTALLATION AND MAINTENANCE GUIDELINES

INSTALLATION: PLACE LIFTING STRAPS (NOT INCLUDED) UNDER THE UNIT TO FACILITATE REMOVAL AFTER USE. UNFOLD D2 DEWATERING BAG ON A STABILIZED AREA OVER DENSE VEGETATION, STRAW OR OTHER COVER. PLACE BAG OVER OPEN GRADED STONE TO ACHIEVE MAXIMUM FILTRATION AND DRAINAGE. INSERT DISCHARGE HOSE FROM PUMP INTO D2 DEWATERING BAG A MINIMUM OF SIX INCHES AND TIGHTLY SECURE WITH THE ATTACHED STRAP TO PREVENT WATER FROM FLOWING OUT OF THE UNIT WITHOUT BEING FILTERED. IF USING OPTIONAL ABSORBENTS, PLACE ABSORBENT BOOM INTO THE D2 DEWATERING BAG. CLIP ABSORBENT BOOM TO TETHER PROVIDED INSIDE THE UNIT.

MAINTENANCE: REPLACE THE UNIT WHEN ½ FULL OF SEDIMENT OR WHEN SEDIMENT HAS REDUCED THE FLOW RATE OF THE PUMP DISCHARGE TO AN IMPRACTICAL RATE. IF USING OPTIONAL OIL ABSORBENTS; REMOVE AND REPLACE ABSORBENT WHEN NEAR SATURATION.

DEWATERING DETAIL AND SIZE CHART

CITY OF WESTFIELD, INDIANA

4/1/14
DATE

FIGURE EC-11

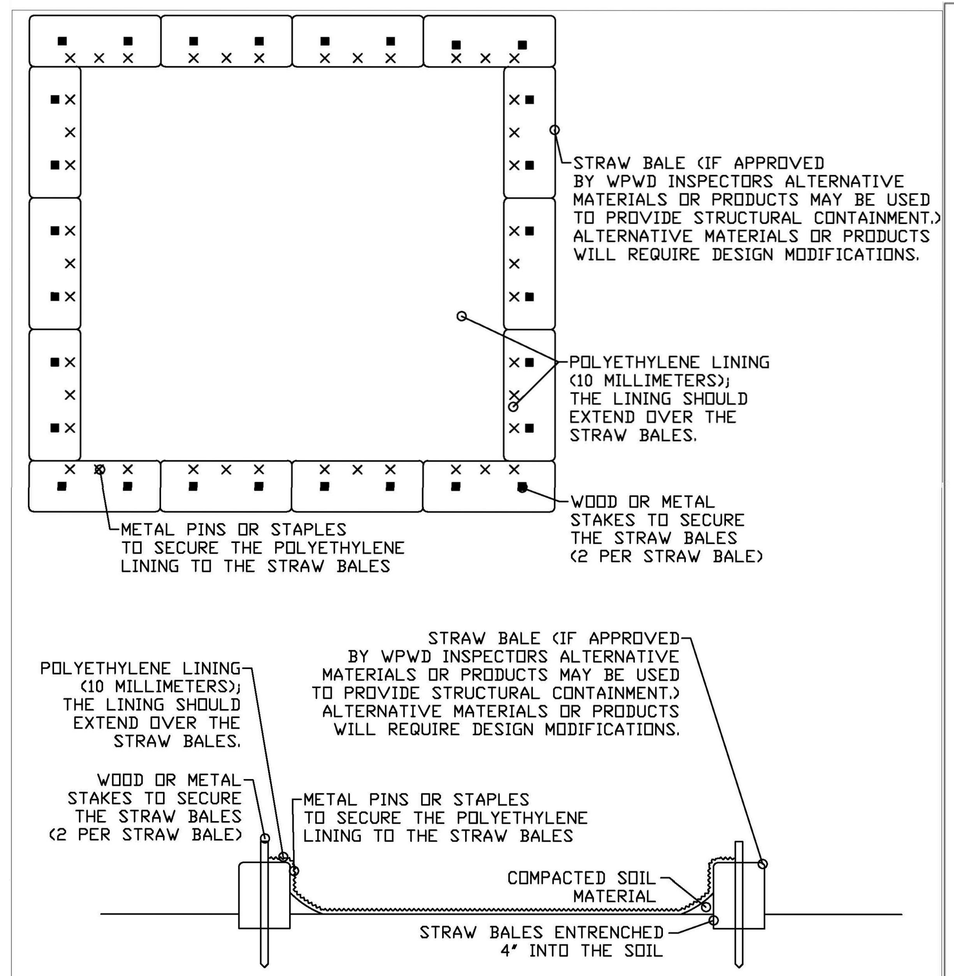

CONCRETE WASHOUT DETAIL

CITY OF WESTFIELD, INDIANA

4/1/13
DATE

FIGURE EC-5

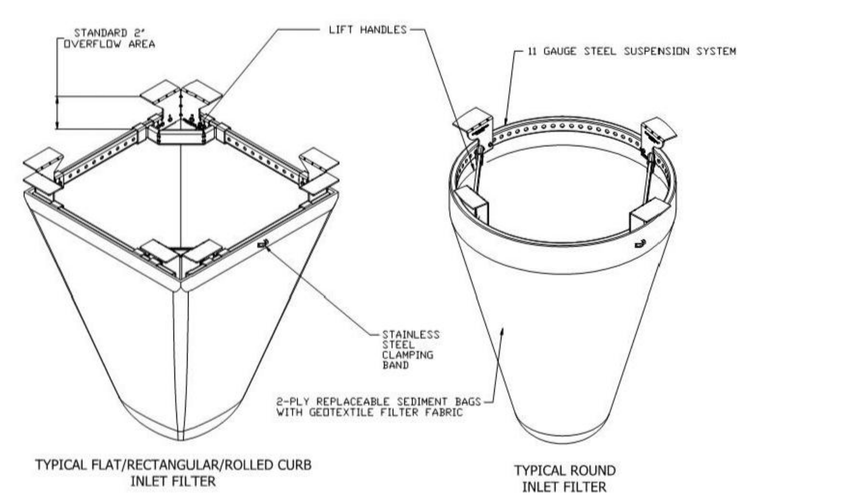

IPP *FLeXstorm* Inlet Filter Specifications

Material Property	Test Method	Value (min ave)	
> Inner Filter Bag Specs (2 ft³ min vol)		Non-Woven	Woven Mono
Grab Tensile	ASTM D 4632	100 lbs	200 lbs
Puncture Strength	ASTM D 4833	65 lbs	90 lbs
Trapezoidal Tear	ASTM D 4533	45 lbs	75 lbs
UV Resistance	ASTM D 4355	70% at 500 hrs	90%
App Open Size (AOS)	ASTM D 4751	70 sieve (.212 mm)	40 sieve (.425 mm)
Permittivity	ASTM D 4491	2.0 /sec	2.1/sec
Water Flow Rate	ASTM D 4491	145 gpm/sqft	145 gpm/sqft
> Polyester Outer Reinforcement Bag Specifications			
Weight	ASTM D 3776	4.55 oz/sqyd +/- 15%	
Thickness	ASTM D 1777	.040 +/- .005	
> Frame Construction			
A36 Structural Steel; 11 Guage; Zinc Plated	ASTM A 576	*Tensile Strength > 58,000 psi; Yield Strength > 36,000 psi*	

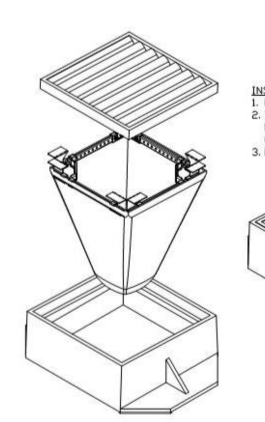

INSTALLATION:
1. REMOVE GRATE
2. DROP INLET FILTER ONTO LOAD BEARING LIP OF CASTING OR CONCRETE STRUCTURE
3. REPLACE GRATE

INLET PROTECTION

CITY OF WESTFIELD, INDIANA

4/1/13
DATE

FIGURE EC-6

CVS pharmacy

12,900 TYPE-A
CHAMFER DRIVE-THRU

STORE NUMBER: 10591

161ST STREET AND SPRING MILL ROAD
WESTFIELD, INDIANA

PROJECT TYPE: NEW STORE
DEAL TYPE:
CS PROJECT NUMBER: 071776

ARCHITECT OF RECORD

CONSULTANT:

AMERICAN STRUCTUREPOINT INC.
7260 SHADELAND STATION
INDIANAPOLIS, INDIANA 46256
p:(317) 547-5580 f:(317) 543-0270
www.structurepoint.com

DEVELOPER:

TMC Indiana 2, LLC
501 Pennsylvania Pkwy.
Suite 160
Indianapolis, Indiana 46280
Phone (317) 705-8800
Contact: Craig Forgey

SEAL:

APPROVAL PENDING
NOT FOR CONSTRUCTION

REVISIONS:

1	TAC COMMENTS	07-10-2015

PLANNING MGR: JLW
DRAWING BY: RCB
DATE: 05-29-2015
JOB NUMBER: 2007.01007

TITLE:
EROSION CONTROL DETAILS

SHEET NUMBER:
C520

COMMENTS:

PRINT DATE: 7/15/15 EDIT DATE: 6/2/15 – 9:32 AM EDITED BY: RBERGER DRAWING FILE: P:\IN2007\1007\D. DRAWINGS\CIVIL\C. CONSTRUCTION DOCUMENTS\200701007.CE.C520-C521.ECD.DWG
PLOT SCALE: 1:2.5849

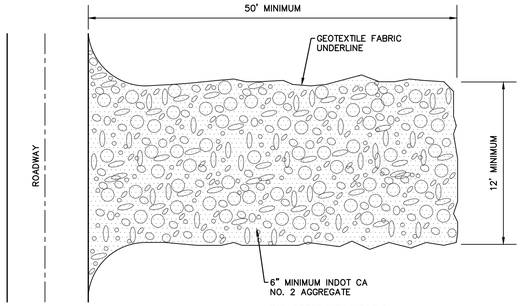

SPECIFICATIONS

LOCATION
- AVOID LOCATING ON STEEP SLOPES OR AT CURVES IN PUBLIC ROADS.

DIMENSIONS
- WIDTH: TWELVE (12) FEET MINIMUM OR FULL WIDTH OF ENTRANCE/EXIT DRIVE, WHICHEVER IS GREATER.
- LENGTH: FIFTY (50) FEET MINIMUM OR FULL LENGTH OF DRIVE, WHICHEVER IS GREATER.
- THICKNESS: SIX (6) INCHES MINIMUM.

MATERIALS
- ONE (1) TO TWO AND ONE-HALF (2-1/2) INCH DIAMETER WASHED AGGREGATE (INDOT CA NO. 2).
- ONE-HALF (1/2) TO ONE AND ONE-HALF (1-1/2) INCH WASHED AGGREGATE (INDOT CA NO. 53); OPTIONAL, USED PRIMARILY WHERE THE PURPOSE OF THE PAD IS TO KEEP SOIL FROM ADHERING TO VEHICLE TIRES.
- GEOTEXTILE FABRIC UNDERLAYMENT (USED AS A SEPARATE LAYER TO PREVENT INTERMIXING OF AGGREGATE AND THE UNDERLYING SOIL MATERIAL AND TO PROVIDE GREATER BEARING STRENGTH WHEN ENCOUNTERING WET CONDITIONS OR SOILS WITH SEASONAL HIGH WATER TABLE LIMITATIONS).

INSTALLATION
1. REMOVE ALL VEGETATION AND OTHER OBJECTIONABLE MATERIAL FROM THE FOUNDATION AREA.
2. GRADE THE FOUNDATION AND CROWN FOR POSITIVE DRAINAGE.
3. INSTALL A CULVERT PIPE UNDER THE PAD IF NEEDED TO MAINTAIN PROPER PUBLIC ROAD DRAINAGE.
4. IF WET CONDITIONS ARE ANTICIPATED, PLACE GEOTEXTILE FABRIC ON THE GRADED FOUNDATION TO IMPROVE STABILITY.
5. PLACE AGGREGATE (INDOT CA NO. 2) TO THE DIMENSIONS AND GRADE SHOWN IN THE CONSTRUCTION PLANS, LEAVING THE SURFACE SMOOTH AND SLOPED FOR DRAINAGE.
6. TOP-DRESS THE DRIVE WITH WASHED AGGREGATE (INDOT CA NO. 53).
7. WHERE POSSIBLE, DIVERT ALL STORM WATER RUNOFF AND DRAINAGE FROM THE TEMPORARY CONSTRUCTION INGRESS/EGRESS PAD TO A SEDIMENT TRAP OR BASIN.

MAINTENANCE
- INSPECT DAILY.
- RESHAPE PAD AS NEEDED FOR DRAINAGE AND RUNOFF CONTROL.
- TOP-DRESS WITH CLEAN AGGREGATE AS NEEDED.
- IMMEDIATELY REMOVE MUD AND SEDIMENT TRACKED OR WASHED ONTO PUBLIC ROADS.
- FLUSHING SHOULD ONLY BE USED IF THE WATER FROM THE CONSTRUCTION DRIVE CAN BE CONVEYED INTO A SEDIMENT TRAP OR BASIN.

GRAVEL CONSTRUCTION ENTRANCE (SITES LESS THAN TWO ACRES)

NOT TO SCALE (REV. 11/13)

SEEDING SPECIFICATIONS

SEEDBED PREPARATION
- GRADE AND APPLY SOIL AMENDMENTS.

SEEDING FREQUENCY
- SEED FINAL GRADED AREAS DAILY WHILE SOIL IS STILL LOOSE AND MOIST.

DENSITY OF VEGETATIVE COVER
- NINETY PERCENT OR GREATER OVER THE SOIL SURFACE.

MATERIALS
- SOIL AMENDMENTS – SELECT MATERIALS AND RATES AS DETERMINED BY A SOIL TEST (CONTACT YOUR COUNTY SOIL AND WATER CONSERVATION DISTRICT OR COOPERATIVE EXTENSION OFFICE FOR ASSISTANCE AND SOIL INFORMATION, INCLUDING AVAILABLE SOIL TESTING SERVICES) OR 400 TO 600 POUNDS OF 12-12-12 ANALYSIS FERTILIZER, OR EQUIVALENT. CONSIDER THE USE OF REDUCED PHOSPHOROUS APPLICATION WHERE SOIL TESTS INDICATE ADEQUATE PHOSPHOROUS LEVELS IN THE SOIL PROFILE.
- SEED – SELECT APPROPRIATE PLANT SPECIES SEED OR SEED MIXTURES ON THE BASIS OF SOIL TYPE, SOIL pH, REGION OF THE STATE, TIME OF YEAR, AND INTENDED LAND USE OF THE AREA TO BE SEEDED (SEE TABLE 1).
- MULCH – STRAW, HAY, WOOD FIBER, ETC. (TO PROTECT SEEDBED, RETAIN MOISTURE, AND ENCOURAGE PLANT GROWTH), ANCHORED TO PREVENT REMOVAL BY WIND OR WATER OR COVERED WITH PREMANUFACTURED EROSION CONTROL BLANKETS.

SEEDING APPLICATIONS

SITE PREPARATION
1. GRADE THE SITE TO ACHIEVE POSITIVE DRAINAGE.
2. ADD TOPSOIL TO ACHIEVE NEEDED DEPTH FOR ESTABLISHMENT OF VEGETATION. (COMPOST MATERIAL MAY BE ADDED TO IMPROVE SOIL MOISTURE HOLDING CAPACITY, SOIL FRIABILITY, AND NUTRIENT AVAILABILITY.)

SEEDBED PREPARATION
1. TEST SOIL TO DETERMINE pH AND NUTRIENT LEVELS.
2. APPLY SOIL AMENDMENTS AS RECOMMENDED BY THE SOIL TEST AND WORK INTO THE UPPER TWO TO FOUR INCHES OF SOIL. IF TESTING IS NOT DONE, APPLY 400 TO 600 POUNDS PER ACRE OF 12-12-12 ANALYSIS FERTILIZER, OR EQUIVALENT.
3. TILL THE SOIL TO OBTAIN A UNIFORM SEEDBED. USE A DISK OR RAKE, OPERATED ACROSS THE SLOPE, TO WORK THE SOIL AMENDMENTS INTO THE UPPER TWO TO FOUR INCHES OF THE SOIL.

SEEDING
OPTIMUM SEEDING DATES ARE MARCH 1 TO MAY 10 AND AUGUST 10 TO SEPTEMBER 30. PERMANENT SEEDING DONE BETWEEN MAY 10 AND AUGUST 10 MAY NEED TO BE IRRIGATED. SEEDING OUTSIDE OR BEYOND OPTIMUM SEEDING DATES IS STILL POSSIBLE WITH THE UNDERSTANDING THAT RESEEDING OR OVERSEEDING MAY BE REQUIRED IF ADEQUATE SURFACE COVER IS NOT ACHIEVED. RESEEDING OR OVERSEEDING CAN BE EASILY ACCOMPLISHED IF THE SOIL SURFACE REMAINS WELL PROTECTED WITH MULCH.
1. SELECT A SEEDING MIXTURE AND RATE FROM TABLE 1. SELECT SEED MIXTURE BASED ON SITE CONDITIONS, SOIL pH, INTENDED LAND USE, AND EXPECTED LEVEL OF MAINTENANCE.
2. APPLY SEED UNIFORMLY WITH A DRILL OR CULTIPACKER SEEDER OR BY BROADCASTING. PLANT OR COVER THE SEED TO A DEPTH OF ONE-FOURTH TO ONE-HALF INCH. IF DRILLING OR BROADCASTING THE SEED, ENSURE GOOD SEED-TO-SOIL CONTACT BY FIRMING, THE SEEDBED WITH A ROLLER OR CULTIPACKER AFTER COMPLETING SEEDING OPERATIONS. (IF SEEDING IS DONE WITH A HYDROSEEDER, FERTILIZER AND MULCH CAN BE APPLIED WITH THE SEED IN A SLURRY MIXTURE.)
3. MULCH ALL SEEDED AREAS AND USE APPROPRIATE METHODS TO ANCHOR THE MULCH IN PLACE. CONSIDER USING EROSION CONTROL BLANKETS ON SLOPING AREAS AND CONVEYANCE CHANNELS.

SEEDING MAINTENANCE
- INSPECT WITHIN 24 HOURS OF EACH RAIN EVENT AND AT LEAST ONCE EVERY SEVEN CALENDAR DAYS UNTIL THE VEGETATION IS SUCCESSFULLY ESTABLISHED.
- CHARACTERISTICS OF A SUCCESSFUL STAND INCLUDE VIGOROUS DARK GREEN OR BLUISH-GREEN SEEDLINGS WITH A UNIFORM VEGETATIVE COVER DENSITY OF 90 PERCENT OR MORE.
- CHECK FOR EROSION OR MOVEMENT OF MULCH.
- REPAIR DAMAGED, BARE, GULLIED, OR SPARSELY VEGETATED AREAS AND THEN FERTILIZE, RESEED, AND APPLY AND ANCHOR MULCH.
- IF PLANT COVER IS SPARSE OR PATCHY, EVALUATE THE PLANT MATERIALS CHOSEN, SOIL FERTILITY, MOISTURE CONDITION, AND MULCH APPLICATION; REPAIR AFFECTED AREAS EITHER BY OVERSEEDING OR PREPARING A NEW SEEDBED AND RESEEDING. APPLY AND ANCHOR MULCH ON THE NEWLY SEEDED AREAS.
- IF VEGETATION FAILS TO GROW, CONSIDER SOIL TESTING TO DETERMINE SOIL pH OR NUTRIENT DEFICIENCY PROBLEMS. (CONTACT YOUR SOIL AND WATER CONSERVATION DISTRICT OR COOPERATIVE EXTENSION OFFICE FOR ASSISTANCE.)
- IF ADDITIONAL FERTILIZATION IS NEEDED TO GET A SATISFACTORY STAND, DO SO ACCORDING TO SOIL TEST RECOMMENDATIONS.
- ADD FERTILIZER THE FOLLOWING GROWING SEASON. FERTILIZE ACCORDING TO SOIL TEST RECOMMENDATIONS.
- FERTILIZE TURF AREAS ANNUALLY. APPLY FERTILIZER IN A SPLIT APPLICATION. FOR COOL-SEASON GRASSES, APPLY ONE-HALF OF THE FERTILIZER IN LATE SPRING AND ONE-HALF IN EARLY FALL. FOR WARM-SEASON GRASSES, APPLY ONE-THIRD IN EARLY SPRING, ONE-THIRD IN LATE SPRING, AND THE REMAINING ONE-THIRD IN MIDDLE SUMMER.

TABLE 1. PERMANENT SEEDING RECOMMENDATIONS

THIS TABLE PROVIDES SEVERAL SEED MIXTURE OPTIONS. ADDITIONAL SEED MIXTURES ARE AVAILABLE COMMERCIALLY. WHEN SELECTING A MIXTURE, CONSIDER INTENDED LAND USE AND SITE CONDITIONS, INCLUDING SOIL PROPERTIES (E.G., SOIL pH AND DRAINAGE), SLOPE ASPECT, AND THE TOLERANCE OF EACH SPECIES TO SHADE AND DROUGHT.

OPEN LOW-MAINTENANCE AREAS
(REMAINING IDLE MORE THAN SIX MONTHS)

SEED MIXTURES	RATE PER ACRE PURE LIVE SEED	OPTIMUM SOIL pH
1. PERENNIAL RYEGRASS -WHITE CLOVER*	70 LBS. 2 LBS.	5.6 TO 7.0
2. PERENNIAL RYEGRASS -TALL FESCUE**	70 LBS. 50 LBS.	5.6 TO 7.0
3. TALL FESCUE** -WHITE CLOVER*	70 LBS. 2 LBS.	5.5 TO 7.5

STEEP BANKS AND CUTS, LOW-MAINTENANCE AREAS
(NOT MOWED)

SEED MIXTURES	RATE PER ACRE PURE LIVE SEED	OPTIMUM SOIL pH
1. SMOOTH BROME GRASS -RED CLOVER*	35 LBS. 20 LBS.	5.5 TO 7.0
2. TALL FESCUE** -WHITE CLOVER*	50 LBS. 2 LBS.	5.5 TO 7.5
3. TALL FESCUE** -RED CLOVER*	50 LBS. 20 LBS.	5.5 TO 7.5
4. ORCHARD GRASS -RED CLOVER* -WHITE CLOVER*	30 LBS. 20 LBS. 2 LBS.	5.6 TO 7.0
5. CROWNVETCH* -TALL FESCUE**	12 LBS. 30 LBS.	5.6 TO 7.0

LAWNS AND HIGH-MAINTENANCE AREAS

SEED MIXTURES	RATE PER ACRE PURE LIVE SEED	OPTIMUM SOIL pH
1. BLUEGRASS	140 LBS.	5.5 TO 7.0
2. PERENNIAL RYEGRASS (TURF TYPE)	60 LBS. 90 LBS.	5.6 TO 7.0
3. TALL FESCUE (TURF TYPE)** -BLUEGRASS	170 LBS. 30 LBS.	5.6 TO 7.5

CHANNELS AND AREAS OF CONCENTRATED FLOW

SEED MIXTURES	RATE PER ACRE PURE LIVE SEED	OPTIMUM SOIL pH
1. PERENNIAL RYEGRASS -WHITE*	150 LBS. 2 LBS.	5.5 TO 7.0
2. KENTUCKY BLUEGRASS -SMOOTH BROMEGRASS -SWITCHGRASS -TIMOTHY -PERENNIAL RYEGRASS -WHITE CLOVER**	20 LBS. 10 LBS. 3 LBS. 4 LBS. 10 LBS. 2 LBS.	5.5 TO 7.5
3. TALL FESCUE* -WHITE CLOVER**	150 LBS. 2 LBS.	5.5 TO 7.5
4. TALL FESCUE** -PERENNIAL RYEGRASS -KENTUCKY BLUEGRASS	150 LBS. 20 LBS. 20 LBS.	5.5 TO 7.5

*FOR BEST RESULTS: (A) LEGUME SEED SHOULD BE INOCULATED; (B) SEEDING MIXTURES CONTAINING LEGUMES SHOULD PREFERABLY BE SPRING-SEEDED, ALTHOUGH THE GRASS MAY BE FALL-SEEDED AND THE LEGUME FROST-SEEDED; AND (C) IF LEGUMES ARE FALL-SEEDED, DO SO IN EARLY FALL.

**TALL FESCUE PROVIDES LITTLE COVER FOR, AND MAY BE TOXIC TO SOME SPECIES OF WILDLIFE. THE INDIANA DEPARTMENT OF NATURAL RESOURCES RECOGNIZES THE NEED FOR ADDITIONAL RESEARCH ON ALTERNATIVES SUCH AS BUFFALOGRASS, ORCHARDGRASS, SMOOTH BROMEGRASS, AND SWITCHGRASS. THIS RESEARCH, IN CONJUNCTION WITH DEMONSTRATION AREAS, SHOULD FOCUS ON EROSION CONTROL CHARACTERISTICS, WILDLIFE TOXICITY, TURF DISABILITY, AND DROUGHT RESISTANCE.

NOTES:
1. AN OAT OR WHEAT COMPANION OR NURSE CROP MAY BE USED WITH ANY OF THE ABOVE PERMANENT SEEDING MIXTURES, AT THE FOLLOWING RATES:
   A. SPRING OATS – ONE-FOURTH TO THREE-FOURTHS BUSHEL PER ACRE
   B. WHEAT – NO MORE THAN ONE-HALF BUSHEL PER ACRE
2. A HIGH POTENTIAL FOR FERTILIZER, SEED, AND MULCH TO WASH EXISTIS ON STEEP BANKS, CUTS, AND IN CHANNELS AND AREAS OF CONCENTRATED FLOW.

PERMANENT SEEDING WITH MULCH

NOT TO SCALE (REV. 11/13)

MULCH SPECIFICATIONS

MATERIALS

TABLE 1. SLOPE STEEPNESS RESTRICTIONS

MATERIAL*	RATE PER ACRE	COMMENTS
STRAW OR HAY	2 TONS	SHOULD BE DRY, FREE OF UNDESIRABLE SEEDS. SPREAD BY HAND OR MACHINE. MUST BE CRIMPED OR ANCHORED (SEE TABLE 2).
WOOD FIBER OR CELLULOSE	1 TON	APPLY WITH A HYDRAULIC MULCH MACHINE AND USE WITH TACKING AGENT.

*MULCHING IS NOT RECOMMENDED IN CONCENTRATED FLOWS. CONSIDER EROSION CONTROL BLANKETS OR OTHER STABILIZATION METHODS.

COVERAGE
- THE MULCH SHOULD HAVE A UNIFORM DENSITY OF AT LEAST 75 PERCENT OVER THE SOIL SURFACE.

ANCHORING

TABLE 2. MULCH ANCHORING METHODS

ANCHORING METHOD*	HOW TO APPLY
MULCH ANCHORING TOOL OR FARM DISK (DULL, SERRATED, AND BLADES SET STRAIGHT)	CRIMP OR PUNCH THE STRAW OR HAY TWO TO FOUR INCHES INTO THE SOIL. OPERATE MACHINERY ON THE CONTOUR OF THE SLOPE.
CLEATING WITH DOZER TRACKS	OPERATE DOZER UP AND DOWN SLOPE TO PREVENT FORMATION OF RILLS BY DOZER CLEATS.
WOOD HYDROMULCH FIBERS	APPLY ACCORDING TO MANUFACTURER'S RECOMMENDATIONS.
SYNTHETIC TACKIFIERS, BINDERS, OR SOIL STABILIZERS	APPLY ACCORDING TO MANUFACTURER'S RECOMMENDATIONS.
NETTING (SYNTHETIC OR BIODEGRADABLE MATERIAL)	INSTALL NETTING IMMEDIATELY AFTER APPLYING MULCH. ANCHOR NETTING WITH STAPLES. EDGES OF NETTING STRIPS SHOULD OVERLAP WITH EACH UP-SLOPE STRIP OVERLAPPING FOUR TO SIX INCHES OVER THE ADJACENT DOWN-SLOPE STRIP. BEST SUITED TO SLOPE APPLICATIONS. IN MOST INSTANCES, INSTALLATION DETAILS ARE SITE SPECIFIC, SO MANUFACTURER'S RECOMMENDATIONS SHOULD BE FOLLOWED.

*ALL FORMS OF MULCH MUST BE ANCHORED TO PREVENT DISPLACEMENT BY WIND AND/OR WATER.

MULCH APPLICATION
1. APPLY MULCH AT THE RECOMMENDED RATE SHOWN IN TABLE 1.
2. SPREAD THE MULCH MATERIAL UNIFORMLY BY HAND, HAYFORK, MULCH BLOWER, OR HYDRAULIC MULCH MACHINE. AFTER SPREADING, NO MORE THAN 25 PERCENT OF THE GROUND SHOULD BE VISIBLE.
3. ANCHOR STRAW OR HAY MULCH IMMEDIATELY AFTER APPLICATION. THE MULCH CAN BE ANCHORED USING ONE OF THE METHODS LISTED BELOW:
   a. CRIMP WITH A MULCH ANCHORING TOOL, A WEIGHTED FARM DISK WITH DULL SERRATED BLADES SET STRAIGHT, OR TRACK CLEATS OF A BULLDOZER,
   b. APPLY HYDRAULIC MULCH WITH SHORT CELLULOSE FIBERS,
   c. APPLY A LIQUID TACKIFIER, OR
   d. COVER WITH NETTING SECURED BY STAPLES.

MULCH MAINTENANCE
- INSPECT WITHIN 24 HOURS OF EACH RAIN EVENT AND AT LEAST ONCE EVERY SEVEN CALENDAR DAYS.
- CHECK FOR EROSION OR MOVEMENT OF MULCH; REPAIR DAMAGED AREAS, RESEED, APPLY NEW MULCH AND ANCHOR THE MULCH IN PLACE.
- CONTINUE INSPECTIONS UNTIL VEGETATION IS FIRMLY ESTABLISHED.
- IF EROSION IS SEVER OR RECURRING, USE EROSION CONTROL BLANKETS OR OTHER MORE SUBSTANTIAL STABILIZATION METHODS TO PROTECT THE AREA.

CVS pharmacy

12,900 TYPE-A CHAMFER DRIVE-THRU

STORE NUMBER: 10591

161ST STREET AND SPRING MILL ROAD
WESTFIELD, INDIANA

PROJECT TYPE: NEW STORE
DEAL TYPE:
CS PROJECT NUMBER: 071776

ARCHITECT OF RECORD

CONSULTANT:

AMERICAN STRUCTUREPOINT INC.
7260 SHADELAND STATION
INDIANAPOLIS, INDIANA 46256
p:(317) 547-5580 f:(317) 543-0270
www.structurepoint.com

DEVELOPER:

TMC Indiana 2, LLC
501 Pennsylvania Pkwy.
Suite 160
Indianapolis, Indiana 46280
Phone (317) 705-8800
Contact: Craig Forgey

SEAL:

APPROVAL PENDING
NOT FOR CONSTRUCTION

REVISIONS:

1	TAC COMMENTS	07-10-2015

PLANNING MGR:	JLW
DRAWING BY:	RCB
DATE:	05-29-2015
JOB NUMBER:	2007.01007

TITLE: EROSION CONTROL DETAILS

SHEET NUMBER: C521

COMMENTS:

PRINT DATE: 7/15/15
PLOT SCALE: 1:2.5849 EDIT DATE: 6/2/15 - 9:32 AM EDITED BY: RBERGER DRAWING FILE: P:\IN2007\1007\D. DRAWINGS\CIVIL\C. CONSTRUCTION DOCUMENTS\2007010007.CE.C520-C521.ECD.DWG

Diagram 1: Bicycle Rack Type.

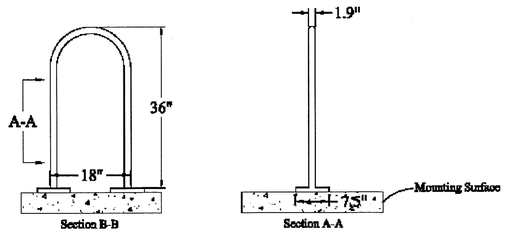

Diagram 2: Bicycle Parking Location and Design.

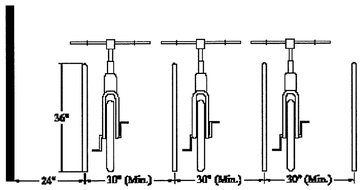

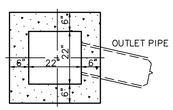

PLAN

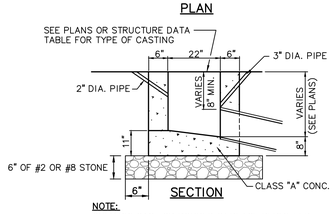

SECTION

NOTE:
ONLY PRECAST OR POURED IN PLACE PERMITTED

INLET TYPE "A"
NOT TO SCALE

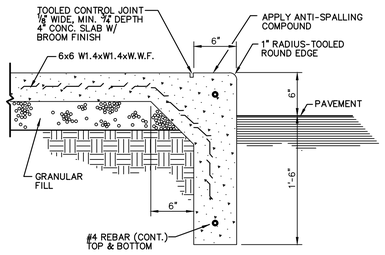

COMBINED CURB & WALK DETAIL
NOT TO SCALE

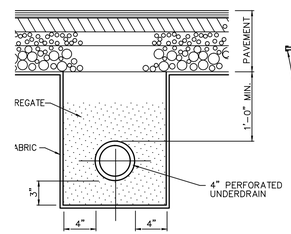

SECTION A-A

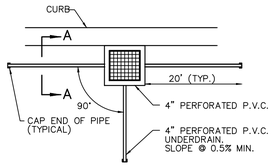

PLAN VIEW – CURB INLET

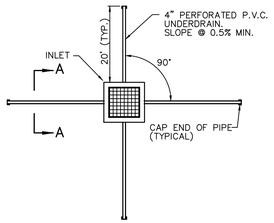

PLAN VIEW – INLET IN PARKING LOT

PAVEMENT UNDERDRAIN DETAIL
NOT TO SCALE

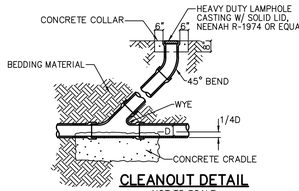

CLEANOUT DETAIL
NOT TO SCALE

NOTE: CLASS "A" BEDDING TO BE UTILIZED FOR ALL CLEANOUT INSTALLATIONS (SEE DETAIL)

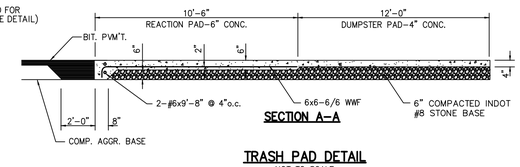

SECTION A-A

TRASH PAD DETAIL
NOT TO SCALE

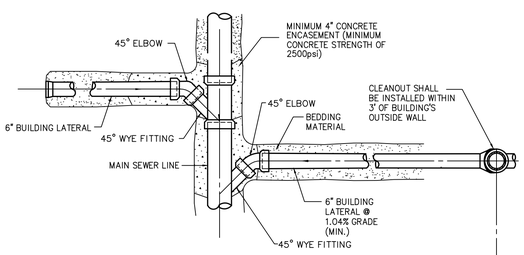

PLAN VIEW

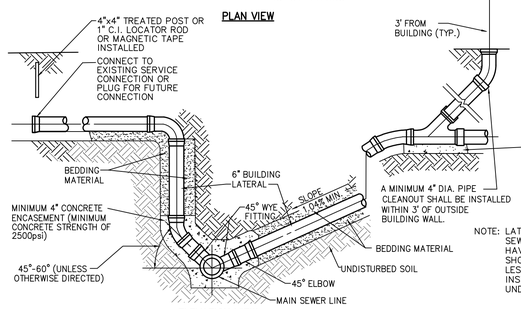

ELEVATION VIEW

LATERAL CONNECTION
NOT TO SCALE

NOTE: LATERALS WHICH CONNECT TO SEWERS 15' DEEP AND OVER SHALL HAVE CONCRETE ENCASEMENT AS SHOWN. SERVICE CONNECTIONS LESS THAN 15' REQUIRE ONLY THE INSTALLATION OF A CONCRETE CRADLE UNDER THE SEWER MAIN AND FITTINGS.

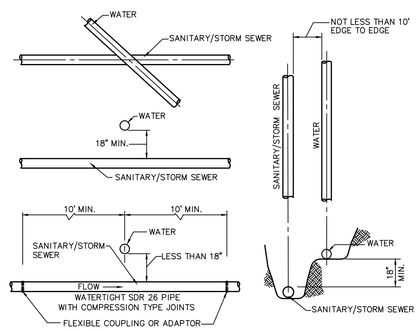

NOTES:

1. WHEN LATERAL SEPARATION IS 10' OR GREATER NO VERTICAL CLEARANCE IS NEEDED
2. ALL CROSSINGS AND SEPARATIONS TO BE 327 IAC, ARTICLES 3 & 8
3. WHEN HORIZONTAL SEPARATION IS LESS THAN 10' OR VERTICAL SEPARATION IS LESS THAN 18", SANITARY PIPE MUST BE WATERTIGHT SDR 26 WITH COMPRESSION TYPE JOINTS.
4. CONTRACTOR SHALL VERIFY THAT MORE STRINGENT SEPARATION REQUIREMENTS DO NOT EXIST WITH THE JURISDICTIONAL WATER UTILITY. IF THEY DO EXIST, CONTRACTOR SHALL FOLLOW THE MORE STRINGENT REQUIREMENTS.

MIN. CROSSOVER & SEPARATION REQUIREMENTS FOR WATER & SANITARY/STORM SEWERS
NOT TO SCALE

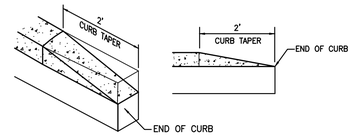

CURB TAPER
NOT TO SCALE

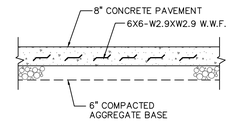

CONCRETE PAVEMENT SECTION
NOT TO SCALE

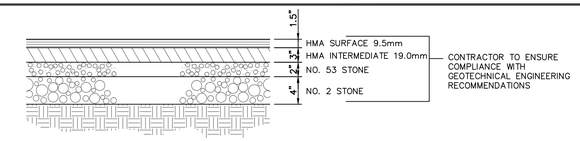

LIGHT DUTY ASPHALT PAVEMENT SECTION
NOT TO SCALE

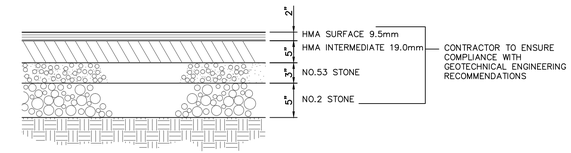

HEAVY DUTY ASPHALT PAVEMENT SECTION
NOT TO SCALE

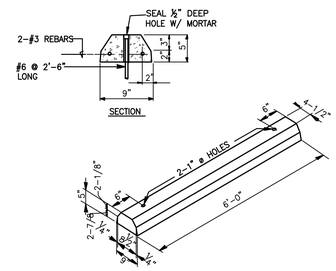

CONCRETE WHEEL STOP
NOT TO SCALE

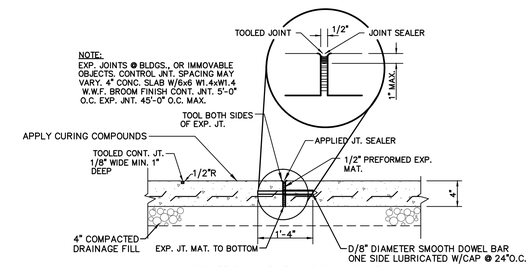

CONTROL & EXPANSION JOINT AND 4" SIDEWALK DETAIL
NOT TO SCALE

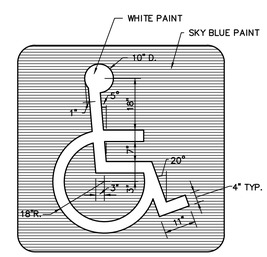

HANDICAP PARKING SYMBOL DETAIL
NOT TO SCALE

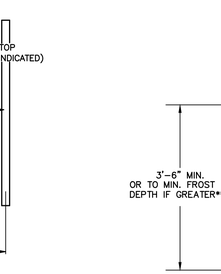

NO PARKING

STANDARD

PARKING SPACE STRIPING
NOT TO SCALE

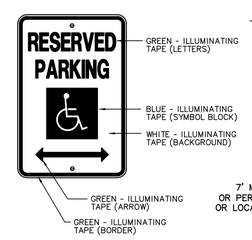

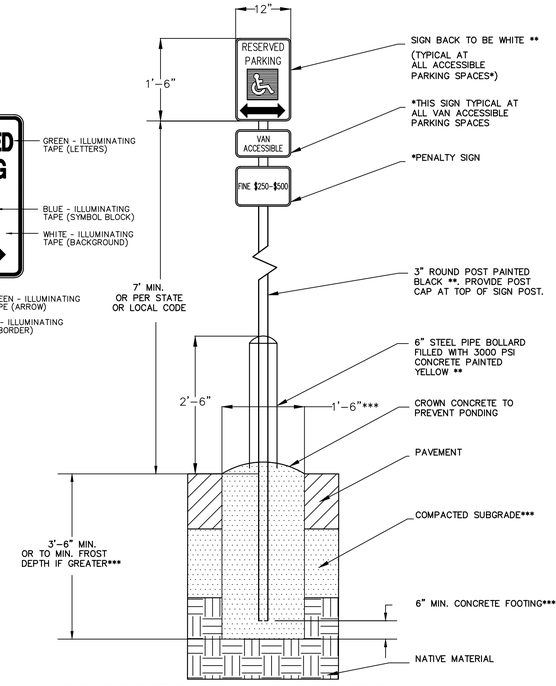

* ALL SIGNS ARE TO BE AFFIXED TO POST WITH RUST RESISTANT HARDWARE.
** SATIN FINISH, ACRYLIC POLYURETHANE ENAMEL OR: TO CONFORM TO ARCHITECTURAL DESIGN CRITERIA FOR A SPECIFIC PROJECT OR PROPERTY.
*** OR: PER GEOTECHNICAL REPORT OR STRUCTURAL ENGINEERING RECOMMENDATIONS.
NOTE: SIGN POST TO MATCH EXISTING CENTER'S SIGNS.

ADA ACCESSIBLE PARKING SIGN DETAIL
NOT TO SCALE

CVS pharmacy

12,900 TYPE-A CHAMFER DRIVE-THRU

STORE NUMBER: 10591
161ST STREET AND SPRING MILL ROAD
WESTFIELD, INDIANA

PROJECT TYPE: NEW STORE
DEAL TYPE:
CS PROJECT NUMBER: 071776

ARCHITECT OF RECORD

CONSULTANT:

AMERICAN STRUCTUREPOINT INC.
7260 SHADELAND STATION
INDIANAPOLIS, INDIANA 46256
p:(317) 547-5580 f:(317) 543-0270
www.structurepoint.com

DEVELOPER:

TMC Indiana 2, LLC
501 Pennsylvania Pkwy.
Suite 160
Indianapolis, Indiana 46280
Phone (317) 705-8800
Contact: Craig Forgey

SEAL:

APPROVAL PENDING NOT FOR CONSTRUCTION

REVISIONS:

1	TAC COMMENTS	07-10-2015

PLANNING MGR:	JLW
DRAWING BY:	RCB
DATE:	05-29-2015
JOB NUMBER:	2007.01007

TITLE: SITE DETAILS

SHEET NUMBER: C601

COMMENTS:

PRINT DATE: 7/15/15
PLOT SCALE: 1:2.5849
EDIT DATE: 7/9/15 – 4:15 PM EDITED BY: RBERGER DRAWING FILE: P:\IN2007\1007\D. DRAWINGS\CIVIL\C. CONSTRUCTION DOCUMENTS\2007101007 CE.C601-C603.SD.DWG

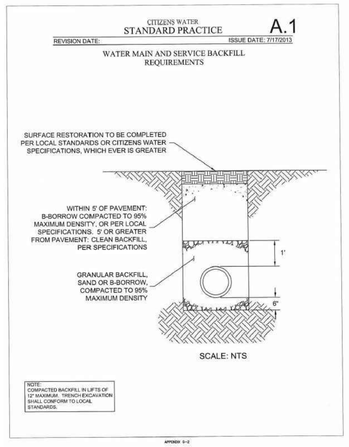

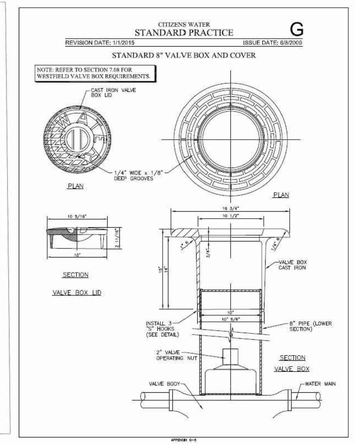

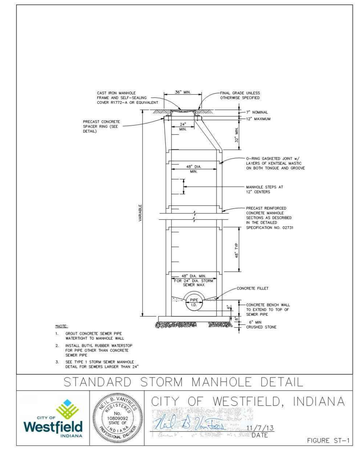

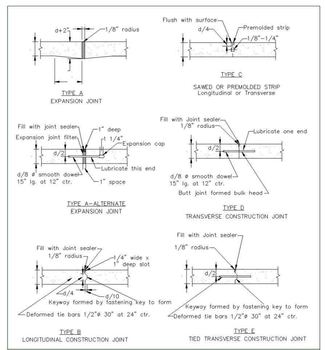

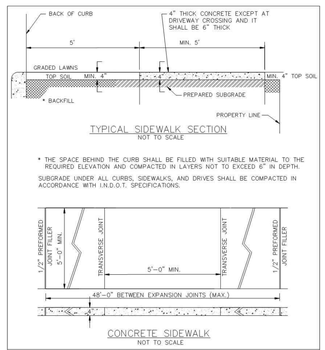

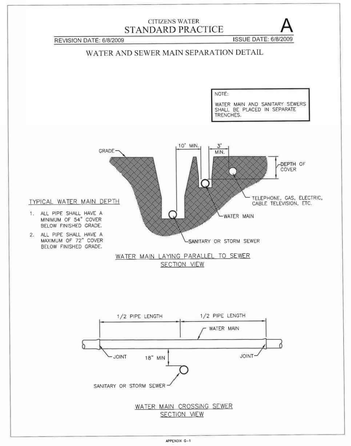

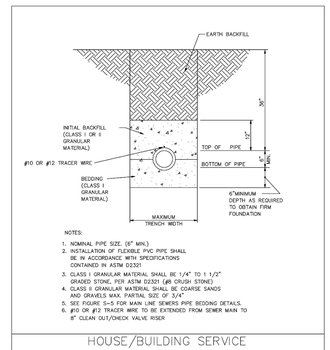

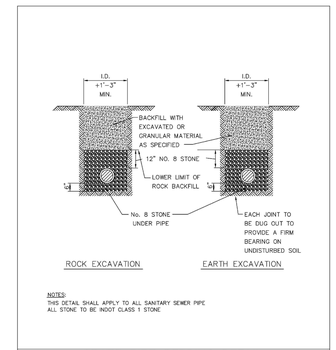

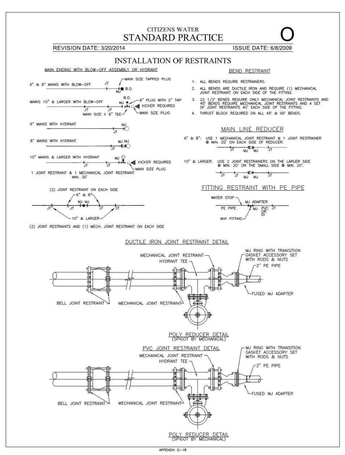

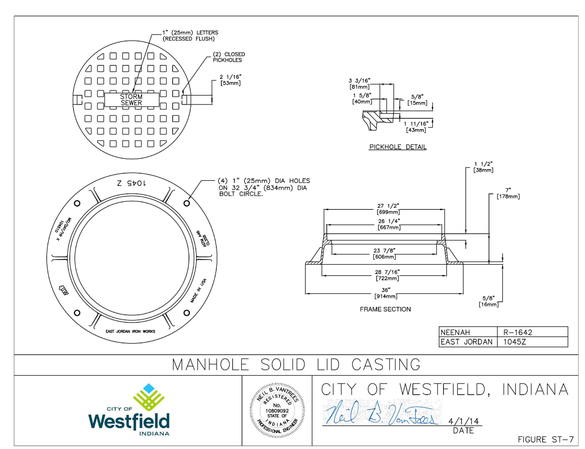

CVS pharmacy

12,900 TYPE-A
CHAMFER DRIVE-THRU

STORE NUMBER: 10591

191ST STREET AND SPRING MILL ROAD
WESTFIELD, INDIANA

PROJECT TYPE: NEW STORE
DEAL TYPE:
CS PROJECT NUMBER: 071776

ARCHITECT OF RECORD

CONSULTANT:

AMERICAN STRUCTUREPOINT INC.
7260 SHADELAND STATION
INDIANAPOLIS, INDIANA 46256
p:(317) 547-5580 f:(317) 543-0270
www.structurepoint.com

DEVELOPER:

TMC Indiana 2, LLC
501 Pennsylvania Pkwy.
Suite 160
Indianapolis, Indiana 46280
Phone (317) 705-8800
Contact: Craig Forgey

SEAL:

APPROVAL PENDING
NOT FOR CONSTRUCTION

REVISIONS:

1	TAC COMMENTS	07-10-2015

PLANNING MGR:	JLW
DRAWING BY:	RCB
DATE:	05-29-2015
JOB NUMBER:	2007.01007

TITLE:
SITE DETAILS

SHEET NUMBER:
C602

COMMENTS:

PRINT DATE: 7/15/15
PLOT SCALE: 1:2.5849 EDIT DATE: 7/9/15 - 4:15 PM EDITED BY: RBERGER DRAWING FILE: P:\N2007\1007\D. DRAWINGS\CIVIL\C. CONSTRUCTION DOCUMENTS\2007101007 CE.C601-C603.SD.DWG

CHAPTER 03400 STORM SEWER PIPES AND OPEN CULVERT MATERIALS

SECTION 03401 GENERAL

03401.01 Introduction

This section covers all work necessary for the construction of the storm sewer piping systems and related items complete, including catch basins and inlet drains, manholes, junction chambers, diversion chambers, outfall structures, and miscellaneous structures.

This specification covers the following types of materials for storm sewers, culverts, underdrains, inlet drains, conduits, and miscellaneous applications:

1. Reinforced Concrete Pipe and Fittings
2. Polyvinyl Chloride Pipe (PVC)
3. Corrugated Metal Pipe
4. Structural Plate Arches
5. Aluminum or Aluminized Steel Pipe and Structural Plate
6. Multi-Plate Pipe and Pipe Arches
7. PVC Composite Pipe
8. Corrugated Polyethylene Pipe- SSD (Perforated and Non-Perforated)

All lots shall have access to a subsurface or storm drain or open ditch.

Storm sewer systems shall have a maximum of four hundred (400) feet between structures.

This specification requires project plans and construction specifications to be submitted to and approved by all appropriate regulatory agencies prior to beginning any work.

Before construction and before fabrication, the Contractor shall submit to the Westfield Public Works Department (WPWD) for approval calculations on the thickness or strength class and drawings showing pipe lengths, joints, and other construction and installation details.

Pipe Marking

Each length of pipe shall bear the name or trademark of the manufacturer, the location of the plant, and the date of manufacture. Each length shall likewise be marked to designate the class or strength of the pipe. The marking shall be made on the exterior or interior of the pipe barrel near the bell or groove end and shall be plainly visible.

03401.02 Minimum Size for Storm Sewers

The minimum diameter of all storm sewers shall be 12 inches. When the minimum 12 inch diameter pipe will not limit the rate of release to the required amount, the rate of release for detention storage shall be controlled by an orifice plate or other device, subject to acceptance of the WPWD.

03401.03 Materials

Manholes, Inlets, and Other Structures

Storm sewer manholes and inlets shall be constructed of precast reinforced concrete. Material and construction shall conform to the latest edition of the Indiana Department of Transportation (INDOT) Standard Specifications, Sections 702 and 720.

Materials for manholes, junction chambers, diversion chambers, and miscellaneous concrete structures shall comply with the following:

1. Cement shall be Portland cement and shall meet the requirements of ASTM Specification C150, AC1.301, and AC1.318. Concrete for precast manhole sections shall be 3000 psi concrete. Monolithic manholes shall use 4000 psi concrete. Ready-mix concrete shall conform to ASTM C94, Alternate 2. Maximum size of aggregate shall be 3/4 inch. Slump shall be between 2 and 5 inches.
2. Forms for chamber and structures shall be plywood or other approved material. Steel forms shall be used for the inside face of monolithic concrete manholes. Doghouse structures shall be permitted with approval from the WPWD.
3. Reinforcing steel shall conform to ASTM A615, Grade 60 deformed bars, or ASTM A616 Grade 60 deformed bars.
4. Mortar Materials:
   1. Sand - ASTM Designation C144, passing a No. 8 sieve.
   2. Cement - ASTM Designation C150, Type 1.
   3. Water - shall be potable.

The manufacturer shall provide openings for sewers entering and leaving the manhole. Any additional openings needed to be made in the field shall be made by drilling holes at least 1/2 inch in diameter with a maximum spacing of 3 inches.

Manhole steps shall be made from a steel reinforcing rod encapsulated in a copolymer polypropylene resin. The manhole steps shall equal or exceed OSHA requirements.

Any other special manholes, junction chambers, diversion chambers, and miscellaneous concrete structures shall be constructed as detailed on the drawings.

Manhole bases shall be set on a minimum of six (6) inches of # 8 aggregate.

Concrete ends sections shall have a minimum of a twenty-four (24) inch precast toe plate bolted to the end section per Standard Detail (ST-30). Corrugated end sections with toe plates shall require WPWD approval.

Catch Basins

During construction, precautionary measures such as adequate screening of grates shall be maintained to deter earth and other materials from entering the drains.

Catch Basins, for sediment control, locations to be determined by a Professional Engineer, and approved by the WPWD. Catch Basins shall be located within easily accessible dedicated easements or right of way of sufficient size to facilitate the required maintenance of these structures

Catch basins and curb inlet structures which are two (2) feet by two (2) feet in size shall not have a depth deeper than four (4) feet from the invert of the lowest pipe to the lowest part of the rim elevation of the casting. All beehive castings on a two (2) feet by two (2) foot box shall have a square riser with a round hole. All structures which do not meet these criteria shall be a manhole type, which is forty-eight (48) inches in diameter.

Castings

Cast iron or ductile iron frames and gratings for catch basins and drain inlets shall be as shown on the drawings. Bearing surfaces shall be clean and shall provide uniform contact. Castings shall be tough, close-grained gray iron, sound, smooth, clean, free from blisters, blow holes, shrinkage, cold shuts, and all defects and shall conform to ASTM A48 Class No. 30-B.

During construction, precautionary measures such as adequate screening of grates shall be maintained to deter earth and other materials from entering the drains.

The following castings types are required:

1. Manholes – Neenah R 1772 A or equivalent
2. Beehive Inlets – Neenah R 4342 or equivalent
3. "Roll Curb" Inlets – Neenah 3501 – TR or TL or equivalent
4. "Chair Back" Curb Inlet – Neenah 3287 – 10V or equivalent
5. Other types shall require approval of the WPWD.

Curb inlet castings which possess open backs or have grate bars parallel to traffic flow (are not "bicycle" safe) will not be accepted by the WPWD.

Storm sewer casting manhole covers, beehive inlets, curb inlets or other approved casting shall have the following phrases cast in recessed letters two (2) inches in height:

1. "Storm Sewer"
2. "Drains to River" or "Drains To Waterway"
3. "Dump No Waste"
4. Other phrases shall require approval of the WPWD.

All casting frames shall have a horizontal bearing surface around the entire perimeter of the frame in order to support the cover or grate.

Bench Walls

Bench walls shall be shaped and formed for a clean transition with proper hydraulics to allow the smooth conveyance of flows through the structure. The bench wall shall form a defined channel, to a minimum height of the spring line of the pipe.

Bench walls shall be formed using full depth Class "A" concrete. Solid concrete block, stone or sand shall not be permitted as a base or filler for the construction of the bench wall.

Reinforced Concrete Pipe and Fittings

Reinforced concrete pipe and fittings shall conform to ASTM C76, latest revision, for circular pipe and ASTM C507 for elliptical pipe.

Reinforced concrete pipe and fittings for normal conditions shall be reinforced in accordance with ASTM C76, Class III, IV or V, Wall B (minimum). Acceptance shall be on the basis of Subsection 4.1.1 of ASTM C76.

Circumferential reinforcing in circular pipe shall be required. Only with approval from the WPWD will elliptical reinforcing or combination of elliptical and circumferential reinforcing or part circular reinforcing shall be permitted, in circular pipe.

Concrete pipe shall be steam cured and shall not be shipped from point of manufacture for at least five days after having been cast.

Joints shall conform to the requirements of ASTM C443. Gaskets shall be of an oil resistant type having a maximum swell of 90% when tested in accordance with ASTM D471. Lubricant for jointing shall be approved by gasket manufacturer.

All rubber gaskets shall be similar to and equal to "Press-Seal" or "Tylox" conforming to ASTM Designation C443, latest revision. The gasket shall be attached to the spigot of the pipe and shall be the sole element depended upon to make the joint flexible and practically watertight.

Butyl mastic joint sealant in rope or trowel applied form specifically made for permanently sealing joints in tongue and groove concrete sewer pipe. The material shall adhere tightly to the pipe surface and form a tight, flexible joint. The material shall have been in use for at least five years. Test results and material specifications shall be submitted to the WPWD and shall be approved prior to use on the project.

Polyvinyl Chloride Pipe and Fittings

Polyvinyl chloride (PVC) pipe and fittings shall comply with ASTM D3034.

Corrugated Metal Pipe and Pipe Arches

The following specifications shall govern the manufacture of the corrugated steel pipe and pipe arches.

1. Specifications for Zinc Coated (galvanized) Steel Sheets (ASTM A444).
2. Manufacture of Corrugated Steel Culverts and Underdrains (AASHTO M-36).
3. Structural Plate for Pipe, Pipe Arches, and Arches (AASHTO M-167).
4. Bituminous Coated Corrugated Steel Pipe and Arches (AASHTO M-190).
5. Sheet Material (ASTM A525).

Bituminous Coated Welded Seam Helically Corrugated Steel Pipe

The pipe shall be fabricated from flat coils. The base metal, spelter coating, and fabrication shall meet the applicable requirements of AASHTO M-36. Corrugations shall be 2-2/3 inch pitch by 1/2 inch depth. Each pipe shall have two annular corrugations rolled in each end. After the ends are rolled, the pipe shall be coated with bituminous material, inside and outside, to a minimum thickness of 0.05 inch. Bands shall be two-piece. Bands laps 12 inch diameter through 48 inch diameter shall be joined by one galvanized bar, bolt, and strap connector. Band laps 54 inch diameter through 96 inch diameter shall be joined by two galvanized bar, bolt, and strap connectors.

Bituminous Coated and Paved Invert Welded Seam Helically Corrugated Steel Pipe

The pipe shall be fabricated from flat coils. The base metal, spelter coating, and fabrication shall meet the applicable requirements of AASHTO M-36. Corrugations shall be 2-2/3 inch pitch by 1/2 inch depth. Each pipe shall have two annular corrugations rolled in each end.

After the ends are rolled, the pipe shall be coated with bituminous material, inside and outside, to a minimum thickness of 0.05 inch. In addition, bituminous material shall be applied to form a smooth pavement in the bottom 25% of pipe and in the bottom 40% of pipe arch as required by AASHTO M-190 for Type C coating.

Smooth Lined Welded Seam Helically Corrugated Steel Pipe

The pipe shall be fabricated from flat coils. The base metal, spelter coating, and fabrication shall meet the applicable requirements of AASHTO M-36. Corrugations shall be 2-2/3 inch pitch by 1/2 inch depth. Each pipe shall have two annular corrugations rolled in each end. Each pipe shall have two lifting lugs welded to the outside of the pipe.

After the ends have been rolled, the pipe shall be coated with bituminous material, inside and outside, to a minimum thickness of 0.05 inch as required by AASHTO M-190 for Type A coating. The pipe shall be centrifugally lined on the inside with bituminous material to form a smooth surface which fills the corrugations to a minimum thickness of 1/8 inch above the crests of the corrugations. The bituminous lining material shall meet the requirements of AASHTO M-190.

Bituminous Coated Pipe Couplings

Coupling bands shall be the same base metal and spelter coating as the pipe. Bands shall be 0.064 inch thick and 10-1/2 inches wide. Bands shall be bituminous coated and shall have two corrugations 7-5/8 inches center to center. Bands 12 inch diameter through 30 inch diameter shall be one-piece and 36 inch diameter through 96 inch diameter shall be two-piece. Band laps 12 inch diameter through 48 inch diameter shall be joined by one galvanized bar, bolt, and strap connector. Band laps 54 inch diameter through 96 inch diameter shall be joined by two galvanized bar, bolt, and strap connectors.

Aluminum Alloy Structural Plate

Aluminum alloy plates and fasteners intended for use in the construction of structural plate pipe and pipe arch for storm sewers shall meet the applicable requirements of AASHTO M-219. The plate shall be fabricated from aluminum alloy 5052 H141. The chemical composition of the plates shall conform to ASTM B209 alloy 5052.

The corrugations shall have a pitch of 9 inches plus or minus 3/8 inch and depth of 2-1/2 inches plus or minus 1/8 inch. The inside crown radius of the corrugations shall be not less than 2 inches.

The structural plate pipe or arches shall be assembled in accordance with the manufacturer's erection instructions and in accordance with the drawings.

Aluminized Steel Pipe and Arches

Aluminized coated corrugated steel pipe and pipe arch intended for use in the construction of storm sewers shall meet the applicable requirements of AASHTO M-36. Sheet material shall meet the latest revision of ASTM A525 and AASHTO M-274. The coils from which the pipe is produced shall be coated with 1.0 ounce per square foot of commercially pure aluminum.

Pipe shall be furnished circular or as a pipe-arch shape as required and shall be fabricated with helical corrugations and a continuous welded seam extending from end to end of each length of pipe.

Each end of each pipe with the welded seam shall have two annular corrugations reformed to permit joining with hugger bands.

Coupling bands shall be hugger bands.

Multi-plate Pipe and Pipe Arches

Multi-plate pipe and pipe arch structures shall be in accordance with AASHTO M-167. They shall be made with steel sections with corrugations 6 inches wide by 2 inches deep running at right angles to the section.

Bolts and nuts shall be special heat-treated galvanized 3/4 inch diameter bolts in accordance with ASTM specifications.

Multi-plate pipes and pipe arches shall be designed in accordance with the manufacturer's design criteria and in accordance with the drawings.

Detailed instructions regarding erection shall be furnished by the manufacturer.

PVC Composite Pipe and Fittings

ABS or PVC composite pipe and fittings shall conform to ASTM D2680, Latest Revision.

Corrugated Polyethylene Pipe and Fittings

Corrugated polyethylene pipe shall comply with the requirements for materials, test methods, dimensions, and marking in accordance with AASHTO M-252 for pipe diameters 6" - 10".

The resin material shall meet ASTM D3350 cell classification 335400C.

The pipe lengths shall be connected using a gasketed, bell and spigot joint. This joint shall consist of a factory installed, gasketed double bell polyethylene coupling, a factory welded bell or integral bell. The spigot end of the pipe shall be furnished with a factory installed elastomeric profile "O-ring" rubber gasket that meets ASTM F477.

The pipe shall be shipped with a removable wrap to protect the gasket. Provide lubrication to the joint prior to pushing together. At least two (2) corrugations of the spigot end must insert into the bell end.

All HDPE pipe shall be certified through the Plastic Pipe Institute (PPI) Third Party Certification Program. All HDPE pipe delivered and installed shall bear the Third Party Administered PPI Seal.

Subsurface Drain Tiles

Double wall, smooth bore perforated, corrugated polyethylene tile, manufactured under specification ASTM F667, shall be required for all subsurface drain tile installed in swales. Double wall, smooth bore perforated, corrugated polyethylene drain tile shall be required for curb sub-grade drainage.

Polyethylene tile shall possess male and female pipe ends, which allow the construction of overlapping, gasket pipe joints, in conformance with the requirements of ASTM D3212. The

gasket material shall conform to all requirements of ASTM F477. As an alternative, pipe joints utilizing external couplings bands will be accepted provided the minimum AASHTO requirements for satisfying soil tightness are also achieved.

Storm sewer pipe shall be of the size shown on the drawings and shall meet all requirements of these specifications. Subsurface drains in swales shall have clean-outs installed every 300 feet, changes in direction, high points, and dead ends.

CHAPTER 03500 INSTALLATION OF STORMWATER FACILITIES

SECTION 03501 GENERAL

03501.01 Pipe Cover, Grade, and Separation from Sanitary Sewers

Pipe

Pipe grade shall be such that, in general, a minimum of 2.0 feet of cover is maintained over the top of the pipe. If the pipe is to be placed under pavement, then the minimum pipe cover shall be 2.5 feet from top of pavement to top of pipe. Uniform slopes shall be maintained between inlets, manholes and inlets to manholes. Final grade shall be set with full consideration of the capacity required, sedimentation problems, and other design parameters. Minimum and maximum allowable slopes shall be those capable of producing velocities of between 2.5 and 10 feet per second, respectively, when the sewer is flowing full. Maximum permissible velocities for various storm sewer materials are listed in Table 03501-1. A minimum of 18 inches of vertical separation between storm sewers, water and sanitary sewers shall be required. When this is not possible, the sanitary sewer must be encased in concrete or ductile iron within 5 feet, each side, of the crossing centerline and in relation to the waterline, water class pipe must be used for the storm and sanitary sewers. Minimum horizontal separation between storm sewers, water and sanitary sewers shall be 10.0 feet and 8.0 feet to the structures.

Rear Yard Swale

Rear yard swales shall have a minimum slope of 2% gradient. Swales less than a 2% gradient are required to have double wall, smooth bore perforated drain tile installed two (2) feet below the invert of the swale. Minimum swale slope shall be greater than 1% gradient. Subsurface drains shall have a minimum slope of 0.5% gradient.

Proposed road grades will be required to be graded within two (2) inches of the proposed sub-grade prior to installation of SSD. Trench width for SSD shall be a minimum of three (3) inches on both sides of the SSD, with a minimum trench width of twelve (12) inches.

03501.02 Alignment

Storm sewers shall be straight between manholes and/or inlets.

03501.03 Manholes/Inlets

All manholes and inlets must be pre-stamped with an appropriate message per the City of Westfield Public Works Department Standards and Specifications. Manholes and/or inlets shall be installed to provide human access to continuous underground storm sewers for the purpose of inspection and maintenance. The casting access minimum inside diameter shall be no less than 22 inches or a rectangular opening of no less than 22 inches by 22 inches. Manholes shall be provided at the following locations:

1. Where two or more storm sewers converge.
2. Where pipe size or the pipe material changes.
3. Where a change in horizontal alignment occurs.
4. Where a change in pipe slope occurs.

5. At intervals in straight sections of sewer, not to exceed the maximum allowed. The maximum distance between storm sewer manholes shall be as shown in Table 03501-2.

In addition to the above requirements, a minimum drop of 0.1 foot through manholes and inlet structures should be provided. Pipe slope should not be so steep that inlets surcharge (i.e. hydraulic grade line should remain below rim elevation).

Manhole/inlet inside sizing shall be according to the City of Westfield Public Works Department Standards and Specifications. Note that the WPWD may require the applicant to provide pre-treatment BMPs prior to discharge of the storm sewer line into a pond.

03501.04 Installation and Workmanship

Bedding and backfill materials around storm sewer pipes, subsurface drains, and the associated structures shall be according to the City of Westfield Public Works Department Standards and Specifications. The specifications for the construction of storm sewers and subsurface drains, including backfill requirements, shall not be less stringent than those set forth in the latest edition of the INDOT Standard Specifications. Additionally, ductile iron pipe shall be laid in accordance with American Water Works Association (AWWA) C-600 and clay pipe shall be laid in accordance with either American Society of Testing Materials (ASTM) C-12 or the appropriate American Association of State Highway and Transportation Officials (AASHTO) specifications. Dips/sags on newly installed storm systems will not be allowed. Also, infiltration from cracks, missing pieces, and joints shall not be allowed. Variations from these standards must be justified and receive approval from the WPWD. Notification must be made to WPWD inspectors at least 48 hours prior to installation. All structures shall require inspection prior to backfill.

03501.05 Special Hydraulic Structures

Special hydraulic structures required to control the flow of water in storm runoff drainage systems include junction chambers, drop manholes, stilling basins, and other special structures. The use of these structures shall be limited to those locations justified by prudent planning and by careful and thorough hydraulic engineering analysis. Certification of special structures by a certified Structural Engineer may also be required.

The use of stormwater lift stations will not be permitted under any circumstances.

03501.06 Connections to Storm Sewer System

Unless otherwise approved, perforated subsurface drain tiles, footer drains, or sump pumps lines shall connect to a storm structure. Storm sewer connections shall be provided by either precast or drilled holes, which are to be a minimum of two (2) inches larger than the O.D. of the connecting tile. Drain tile connections shall be made with either "Tee" or "Wye" method.

Blind connections to storm sewer pipes shall not be allowed.

Subsurface drain tile as specified herein may be used to convey water collected in sump pits and footer drains to an acceptable storm sewer outlet, provided these drain tiles are properly sized to accept these flows.

Gutter or building drains shall not be allowed to outlet directly into storm sewer systems.

To allow any connections to the storm sewer system, provisions for the connections shall be shown in the drainage calculations for the system. Specific language shall be provided in the protective covenants, on the record plat, or with the parcel deed of record, noting the ability or inability of the system to accommodate any permitted connections, for example, sump pumps and footing drains.

1. **Sump pumps** installed to receive and discharge groundwater or other stormwater shall be connected only into "D" subsurface drain (SSD) lateral connection. Sump pumps installed to receive and discharge floor drain flow or other sanitary sewage shall be connected to the sanitary sewers. A sump pump shall be used for one function only, either the discharge of stormwater or the discharge of sanitary sewage, each being connected to the respective receiving system only.
2. **Footing drains and perimeter drains** shall be connected only into "D" subsurface drain (SSD) lateral connection.
3. All **roof downspouts**, roof drains, or roof drainage piping shall discharge onto the ground and shall not be directly connected to the storm drainage system. Variation from this requirement may be requested and granted by the WPWD in special circumstances. No downspouts or roof drains shall be connected to the sanitary sewers.
4. **Garage and Basement floor drains and water softener discharge** shall not be connected to the storm sewers.
5. **Swimming Pool drains** shall not be connected to the storm sewers unless the water is dechlorinated prior to being connected to the storm sewer.

03501.07 Inspection and Rejection of Pipe

The quality of all materials, the process of manufacture, and the finished pipe shall be subject to inspection and approval by the WPWD. Such inspection may be made at the place of manufacture or on the construction site after delivery, or at both places; and the pipe shall be subject to rejection at any time on account of failure to meet any of the specifications' requirements even though sample pipes may have been accepted as satisfactory at the place of manufacture.

Prior to being lowered into the trench, each pipe shall be carefully inspected and those not meeting the specifications shall be rejected and at once removed from the work.

The WPWD shall have the right to cut cores from such pieces of the concrete pipe as the inspector desires for such inspection and tests as the inspector may wish to apply. The Developer/Contractor shall pay for the samples of an Independent Laboratory Testing.

Holes left by the removal of cores shall be filled in an approved manner by and at the expense of the manufacturer of the pipe.

The WPWD shall also have the right to take samples of concrete after it has been mixed, or as it is being placed in the forms or molds, and to make such inspection and tests thereof as the inspector may wish.

Any pipe which has been damaged after delivery will be rejected and replaced solely at the Contractor's expense.

03501.08 Handling Pipe

Each pipe section shall be handled into its position in the trench only in such manner and by such means as the WPWD approves as satisfactory. The Contractor will be required to furnish slings, straps, and other approved devices to permit satisfactory support of all parts of the pipe when it is lifted.

03501.09 Notice to WPWD

The WPWD shall be notified at least 48 hours prior to when the pipes are to be laid in the trench. At least 15 feet of the pipe shall, under ordinary circumstances, be laid before covering begins.

03501.10 Laying Pipe

All pipes shall be re-inspected for soundness and damage due to handling immediately before being lowered into the trench. Any pipe found to be unsound or damaged will be rejected and shall be removed immediately from the site of the work.

Except by permission of the WPWD not more than 100 feet of trench shall be opened at any one time. Not more than 30 feet of trench may be opened in advance of the completed pipe laying operation, and not more than one street crossing may be obstructed by the same trench at any one time.

No portion of a storm sewer pipe, open culvert, manhole, inlet, or subsurface drain tile system shall be installed directly or indirectly onto frozen ground or with frozen backfill materials.

Where ground water is encounter, the contractor shall make every effort necessary to secure a dry trench bottom prior to installation of the storm water system. The contractor shall be required to maintain the groundwater level below the base of the excavation. The City nor the Westfield Public Works Department, will not assume any liability for the actions of the Developer or Contractor in the performance of the required dewatering operation. If trench conditions outlined in this section cannot be achieved, the WPWD may terminate installation until such efforts can be achieved.

All pipes shall be laid accurately to the required line and grade as shown on the drawings, and in the manner prescribed by the pipe manufacturer and appropriate ASTM Specifications, to form a close, concentric joint with the adjoining pipe and to bring the invert of each section to the required grade. The supporting of pipe on block will not be permitted.

Pipe laying shall precede upgrade, beginning at the lower end of the sewer.

Practically, watertight work is required, and the Contractor shall construct the sewers with the type of joint specified.

Joints between precast structures shall be sealed with (1) An approved rubber gasket manufactured and installed in accordance with ASTM C 443, latest version, (2) A 1/2 inch diameter non-asphaltic mastic (Kent Seal or approved equal) conforming to AADHTO M-198 and Federal Specifications SS 521-A, or 4 (3) mortar or butyl rubber sealed on the outside and (4) mortar sealed on the inside and brushed smooth.

The annular space between the pipe and precast structure walls shall be filled inside and outside with a grout mixture composed of 2 parts of fine aggregate and one part of Portland Cement or Class "A" Concrete. Collars shall be formed around the annular space between the pipe and precast structure and trowel and broom finished.

All pipes shall be laid to the line and grade as shown on the drawings. Variations from a uniform line and grade as shown on the drawings shall be cause for the line to be rejected.

The ends of the pipe shall be satisfactorily cleaned just before laying, and the joint shall be made in a satisfactory manner in accordance with the recommendations of the manufacturer on the particular type of joint. All joint work shall be done by experienced workmen.

All pipes shall be bedded as described in this specification under Pipe Bedding. Bell holes shall be excavated in advance of pipe laying so the entire pipe barrel will bear uniformly on the prepared subgrade.

Each length of pipe shall be mechanically pulled "home" with a winch or come-along against the section previously laid and held in place until the trench and bedding are prepared for the next pipe section. Care shall be taken in laying the pipe so not to damage the bell or the spigot end of

the pipe. Mechanical means consisting of a cable placed inside the pipe with a winch, jack, or come-along shall be considered to pull the pipe home where pushing the pipe will not result in a joint going completely home and staying in place.

The Contractor shall use laser beam equipment, surveying instruments, or other proven techniques to maintain accurate alignment and grade.

Open excavation shall be satisfactorily protected at all times. At the end of each day's work, the open ends of all pipes shall be protected against the entrance of animals, children, earth, or debris by bulkheads or stoppers. The bulkheads or stoppers shall be performed to allow passage of water into the installed pipe line to prevent flotation of the pipe line. Any earth or other material that may find entrance into the main sewer or into any lateral sewer through any such open end of unplugged branch must be removed at the Contractor's expense. The cost of all such plugs, and the labor connected therewith, must be included in the regular bid for the sewers.

Storm sewer which outlets into a Hamilton County Regulated Drain shall be approved, inspected, and constructed per the latest standards of the Hamilton County Surveyor's Office.

03501.11 Pipe Bedding and Haunching

Each pipe section shall be laid in a firm foundation of bedding material and haunched and backfilled with care.

Prior to pipe installation, carefully bring bedding material to grade along the entire length of pipe to be installed. To provide adequate support for the pipe, the following bedding procedures shall be followed.

When angular 1/4 to 1/2 inch (6 to 12 mm) clean graded stone, slag, or crushed stone material is used for bedding, little or no compaction is necessary due to the nature of the angular particles. A depth of 4 to 6 inches is generally sufficient to provide uniform bedding. If Class I material is used for bedding, it must also be utilized for haunching up to or higher than the spring line of the pipe to avoid loss of side support through migration of Class II haunching material into the bedding.

1. Take care with coarse sands and gravels and maximum size 20 mm (3/4 inch) materials, to provide uniformly compacted bedding. Excavate the bedding material or place it to a point above the pipe bottom, determining such point by the depth of loose material resulting in the preparation of the bedding and the amount of compaction that will be required to bring the material to grade. Use hand or mechanical tamping to compact the bedding material to a minimum 85% Standard Proctor Density.
2. Slightly damp material will generally result in maximum compaction with a minimum of effort. If water is added to improve compaction or if water exists in the trench, take care to avoid saturation of Class II material, which could result in additional stability problems. Check grade of bedding after compaction.

Bedding material shall have a minimum thickness beneath the pipe of 4 inches (100 mm) or one-eighth of the outside diameter of the pipe, whichever is greater, and shall extend up the sides of the pipe one-sixth of the outside diameter of the pipe.

The rigid pipe, such as concrete or ductile iron, backfill between the bedding material and a plane 12 inches (300 mm) over the top of the pipe shall be hand-placed finely divided earth, free from debris and stones, or granular backfill if required.

For flexible pipe, corrugated metal pipe, the placement of embedment material or haunching around the pipe must be done with care. The ability of the pipe to withstand loading in a trench depends a large part on the method employed in its installation. If crushed stone, pea gravel, or

graded gravel or sand is used to backfill between the bedding material and a plane 12 inches (300 mm) over the top of the pipe, it shall be hand placed. If fine sand, silt, or clayey gravels are used for initial backfilling over the pipe, the material shall be hand placed in 6 to 8 inch layers and hand compacted on both sides of the pipe to an elevation 12 inches (300 mm) over the top of the pipe. Care should be taken so not to compact directly over the pipe.

In yielding subsoils, the trench bottom shall be undercut to the depth necessary and backfilled with graded, crushed stone to form a firm foundation.

Where excavation occurs in rock or hard shale, the trench bottom shall be undercut and a minimum of 6 inches (150 mm) crushed stone bedding placed prior to pipe installation.

03501.12 Concrete Cradle (Class "A" Bedding)

Concrete cradles shall be constructed of Class "A" concrete and of the design shown on the detailed drawings.

03501.13 Manholes and Other Structures

Manholes and other structures are to be constructed at locations shown on the drawings and in accordance with the following specifications:

Precast concrete manhole sections shall conform to ASTM Designation C478, except as modified herein:

1. The joint design of the precast sections shall consist of a bell or groove on one end of the unit of pipe and a spigot or tongue on the adjacent end of the joining section.
2. The joint shall consist of a flat rubber gasket attached to the spigot end of the precast manhole section and shall conform to Sections 6.1.6, 6.1.7 and 9 of ASTM Designation 443, latest revision.

Openings in manhole sections for sewer connections shall be cut at the point of manufacture and shall be circular or horseshoe shaped with grooved or roughened surfaces to improve mortar bond. Doghouse structures shall be permitted with approval from the WPWD.

Manhole bases shall be cast-in-place concrete, reinforced as shown on the Standard Detail Sheet. Manhole bases shall be cast on a minimum of 6 inches of compacted crushed stone.

Manhole channels or inverts (flow lines) shall be preformed and poured with Class "A" concrete to the spring line of the connecting pipe. The finished invert shall be a semi-circular shaped, trowel and broom finished, smooth channel directing the flow to the downstream sewer.

Manhole frames and lids shall be of good quality cast iron, conforming to ASTM Designation A48 and as shown on Detail #2 on the Standard Detail Sheet (See Section 2-11 C-1). Unless specifically designated otherwise, manhole castings shall be the non-locking type. The joint between the casting frame and cone section shall be fully mortared or gasketed and coated with butyl rubber or a coal tar epoxy coating upon reaching its final set to become a watertight joint. The casting frame shall be bolted through all risers and into the cone section.

Manhole steps shall be made from a steel reinforcing rod encapsulated in a copolymer polypropylene resin. Steps shall be placed as shown on the drawings.

TABLE 03501-1

Typical Values of Manning's "n"		
Material	*Manning's "n"*	*Maximum Velocities (feet/second)*
Closed Conduits		
Concrete	0.013	10
Vitrified Clay	0.013	10
HDPE	0.012	10
PVC	0.011	10
Circular CMP, Annular Corrugations, 2 2/3 x ½ inch		
Unpaved	0.024	7
25% Paved	0.021	7
50% Paved	0.018	7
100% Paved	0.013	7
Concrete Culverts	0.013	10
HDPE or PVC	0.012	10
Open Channels		
Concrete, Trowel Finish	0.013	10
Concrete, Broom Finish	0.015	10
Gunite	0.018	10
Riprap Placed	0.030	10
Riprap Dumped	0.035	10
Gabion	0.028	10
New Earth **(1)**	0.025	4
Existing Earth **(2)**	0.030	4
Dense Growth of Weeds	0.040	4
Dense Weeds and Brush	0.040	4
Swale with Grass	0.035	4

Source of manning "n" values: IDEM/PVC Stormwater Drainage Manual, July 1995.
(1) New earth (uniform, sodded, clay soil)
(2) Existing earth (fairly uniform, with some weeds).

TABLE 03501-2

Maximum Distance Between Manholes	
Size of Pipe (Inches)	**Maximum Distance (Feet)**
All sizes	400

PRINT DATE: 7/15/15
PLOT SCALE: 1:2.5849
EDIT DATE: 7/9/15 – 4:15 PM EDITED BY: RBERGER DRAWING FILE: P:\N2007\1007\D. DRAWINGS\CIVIL\C. CONSTRUCTION DOCUMENTS\20070107.CE.C601–C603.SD.DWG

cvs pharmacy

12,900 TYPE-A CHAMFER DRIVE-THRU

STORE NUMBER: 10591
191ST STREET AND SPRING MILL ROAD
WESTFIELD, INDIANA

PROJECT TYPE: NEW STORE
DEAL TYPE:
CS PROJECT NUMBER: 071776

ARCHITECT OF RECORD

CONSULTANT:

AMERICAN STRUCTUREPOINT INC.
7260 SHADELAND STATION
INDIANAPOLIS, INDIANA 46256
p:(317) 547-5580 f:(317) 543-0270
www.structurepoint.com

DEVELOPER:

TMC Indiana 2, LLC
501 Pennsylvania Pkwy.
Suite 160
Indianapolis, Indiana 46280
Phone (317) 705-8800
Contact: Craig Forgey

SEAL:

APPROVAL PENDING
NOT FOR CONSTRUCTION

REVISIONS:

1	TAC COMMENTS	07-10-2015

PLANNING MGR: JLW
DRAWING BY: RCB
DATE: 05-29-2015
JOB NUMBER: 2007.01007
TITLE: SITE DETAILS
SHEET NUMBER: C603
COMMENTS:

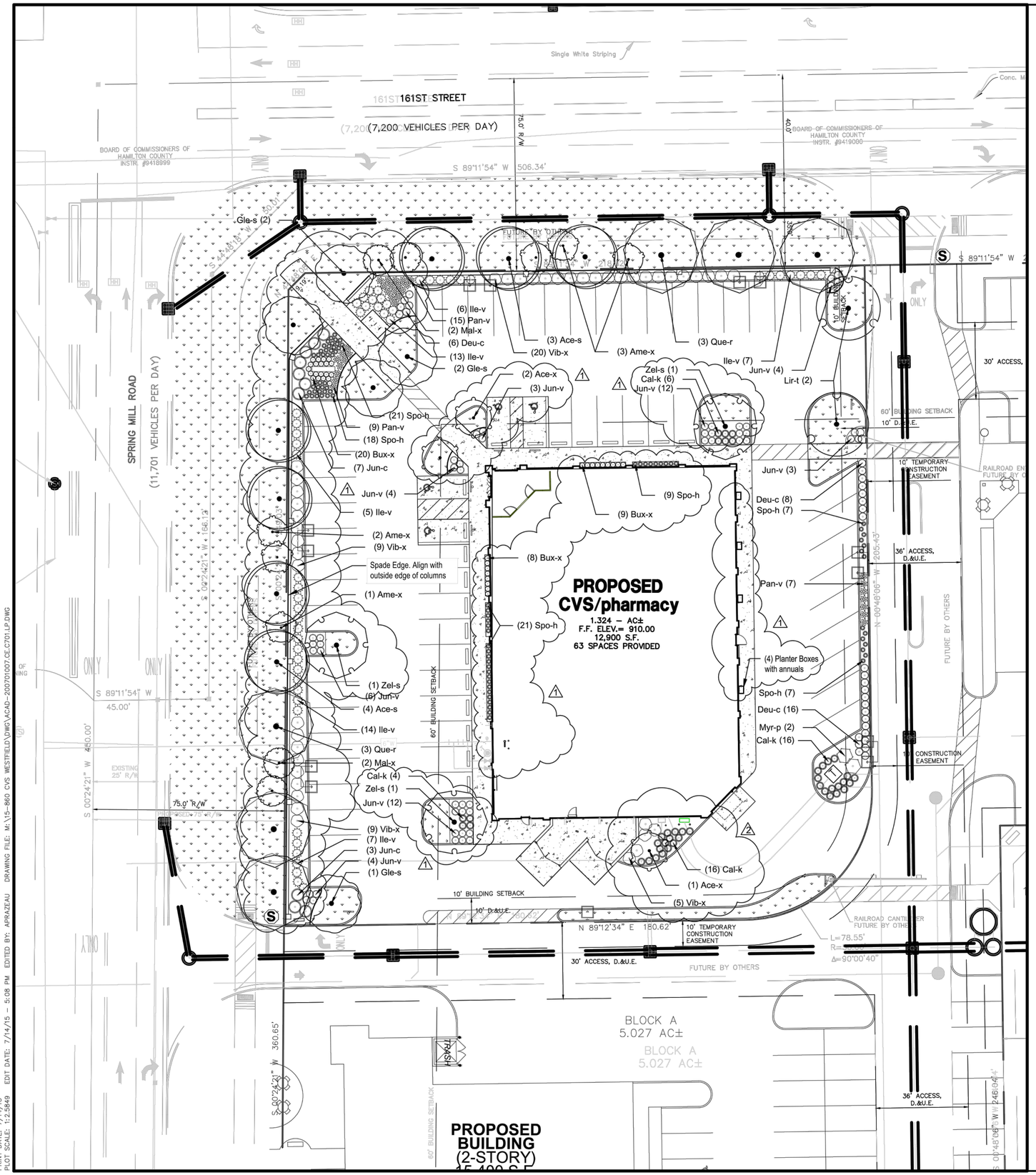

SCALE: 1"=20'

GENERAL LANDSCAPE & PLANTING NOTES

1. Plant material to be installed and maintained by a qualified and experienced landscape installer.
2. All materials are subject to the approval of the Landscape Architect and Owner at any time. Landscape Architect to inspect all plant locations and plant bed conditions prior to installation. Stake all plant locations for review and approval by the Landscape Architect before planting. On-site adjustments may be required. Plants are to be freshly dug. Transporting of plants shall be done in a manner as to not destroy the natural shape, compromise the health, or alter the characteristics of plant materials.
3. Rootballs shall meet or exceed size standards as set forth in 'American Standards for Nursery Stock'. MAIN LEADERS OF ALL TREES SHALL REMAIN INTACT. Remove from the site any plant material that turns brown or defoliates within five (5) days after planting. Replace immediately with approved, specified material.
4. Plant counts indicated on drawings are for Landscape Architect's use only. Contractor shall make own plant quantity takeoffs using drawings, specifications, and plant schedule requirements (i.e., spacing), unless otherwise directed by Landscape Architect. Contractor to verify bed measurements and install appropriate quantities as governed by plant spacing per schedule.
5. All plant beds shall receive 3" minimum of genuine shredded hardwood bark mulch (unless otherwise noted). Apply pre-emergent herbicide as directed by the manufacturer prior to installing mulch. Seed all areas disturbed by construction activities that are not otherwise noted to receive pavement, planting bed, or other treatment.
6. The Contractor shall install and/or amend topsoil in all proposed bed areas to meet ASTM D5268 standards. Landscaper shall verify depth and quality of topsoil prior to plant installation. A minimum of 4" of topsoil is required for lawn areas; 12" for plant beds. Topsoil sources shall include the reuse of surface soil stockpiled on site, clean of roots, plants, sod, stones, clay lumps, and other extraneous or foreign materials larger than 1". Supplement with imported topsoil from off-site sources when quantities are insufficient. Do not obtain supplemental topsoil from agricultural land, bogs, or marshes. Inorganic amendments, organic amendments, and fertilizers shall be used to amend topsoil as needed for long-term plant health.
7. Verify all utility locations in the field prior to beginning work. Repair all damaged utilities to satisfaction of the Owner and Operating Authority at no additional cost.
8. Install all plant material in accordance with all local codes and ordinances. Coordinate with the Owner to obtain any required permits necessary to complete work. All workmanship and materials shall be guaranteed by the Contractor for a period of one (1) calendar year after Final Acceptance.
9. Maintain all plant material for a three (3) month period from date of Substantial Completion. Maintenance shall include pruning, cultivating, watering, weeding, fertilizing, restoring plant saucers, spraying for disease and insects, and replacing tree wrappings. Recommended long-term maintenance procedures shall be provided to the Owner before expiration of this period.
10. Satisfactory Seeded Lawn: At end of maintenance period, a healthy, uniform, close stand of grass has been established, free of weeds and surface irregularities, with coverage exceeding 90 percent over any 10 sq. ft. (0.92 sq. m) and bare spots not exceeding 3 by 3 inches.Reestablish lawns that do not comply with requirements and continue maintenance until lawns are fully satisfactory to the Owner.

LANDSCAPE ORDINANCE REQUIREMENTS

Site Zoned PUD Ordinance Number 14-46 Spring Mill Station

LANDSCAPING AND SCREENING
Section 4 4.3 A
Complies with Zoning Ordinace (WC 1.06.050)

ON-SITE REQUIREMENTS
Land Use Type: Business Uses 1.324 Acre
Requirement:10 Shade Trees +10 Ornamental Trees + 25 Shrubs/acre
Required: 13 Shade Trees + 13 Ornamental Trees + 33 Shrubs
Provided: 13 Shade Trees + 13 Ornamental Trees + 33 Shrubs

STREET REQUIREMENTS
Requirement: 3 shade or evergreen trees + 2 Ornamental trees + 25 shrubs/100 l.f.
161st Street - 225 l.f.
Required: 7 shade trees + 5 ornamental trees + 56 shrubs
Provided: 7 shade trees + 5 ornamental trees + 63 shrubs

Spring Mill Road - 255 l.f.
Required: 8 shade trees + 5 ornamental trees + 64 shrubs/grasses
Provided: 8 shade trees + 5 ornamental trees + 122 shrubs/grasses

BUFFER YARDS
Not Required per PUD

PARKING AREA LANDSCAPING
65 Spaces/36,888 s.f.
10% to be Landscaped
Requirements: 1 Tree + 4 Shrubs per Island
Required: 3,688 s.f. of green
Provided: 8 islands/3,572 s.f.
Required: 8 trees + 32 shrubs
Provided: 10 trees + 39 shrubs

PERIMETER PARKING LOT LANDSCAPING
448 lft @ 5' in Width
Requirement: 1 Tree/30 l.f. + 1 shrub/3 l.f. of parking lot length
Required: 15 trees + 150 shrubs
Provided: 15 Trees (see Street Tree requirement) + 150 Shrubs

FOUNDATION PLANTINGS
Front Building Facade: 232 l.f.
Requirement: 1 Tree or shrub/12 l.f. of frontage only
Required: 19 trees or shrubs
Provided: 23 shrub + 30 ornamental grasses

HATCH LEGEND

Areas to receive Lawn

CAUTION !!
THE LOCATIONS OF ALL EXISTING UNDERGROUND UTILITIES SHOWN ON THIS PLAN ARE BASED UPON ABOVE GROUND EVIDENCE (including, but not limited to, manholes, inlets, valves, and marks made upon the ground by others) AND ARE SPECULATIVE IN NATURE. THERE MAY ALSO BE OTHER EXISTING UNDERGROUND UTILITIES FOR WHICH THERE IS NO ABOVE GROUND EVIDENCE OR FOR WHICH NO ABOVE GROUND EVIDENCE WAS OBSERVED. THE EXACT LOCATIONS OF SAID EXISTING UNDERGROUND UTILITIES SHALL BE VERIFIED BY THE CONTRACTOR PRIOR TO ANY AND ALL CONSTRUCTION.
1–800–382–5544
CALL TOLL FREE
– INDIANA UNDERGROUND –

CVS pharmacy

12,900 TYPE-A
CHAMFER DRIVE-THRU

STORE NUMBER: 10591
161ST STREET AND SPRING MILL ROAD
WESTFIELD, INDIANA

PROJECT TYPE: NEW STORE
DEAL TYPE:
CS PROJECT NUMBER: 071776

ARCHITECT OF RECORD

CONSULTANT:

AMERICAN STRUCTUREPOINT INC.
7260 SHADELAND STATION
INDIANAPOLIS, INDIANA 46256
p:(317) 547-5580 f:(317) 543-0270
www.structurepoint.com

DEVELOPER:

TMC Indiana 2, LLC
501 Pennsylvania Pkwy.
Suite 160
Indianapolis, Indiana 46280
Phone (317) 705–8800
Contact: Craig Forgey

SEAL:

ALYSSA P. PRAZEAU
REGISTERED
No. 2002–132
STATE OF INDIANA
LANDSCAPE ARCHITECT

REVISIONS:

1	TAC COMMENTS	07–10–2015
2	OWNER COMMENTS	07–14–2015

PLANNING MGR:	JLW
DRAWING BY:	RCB
DATE:	05–29–2015
JOB NUMBER:	2007.01007

TITLE: PLANTING PLAN

SHEET NUMBER: C701

COMMENTS:

PRINT DATE: 7/15/15
PLOT SCALE: 1:2.5849 EDIT DATE: 7/14/15 – 5:08 PM EDITED BY: APRAZEAU DRAWING FILE: M:\15-860 CVS WESTFIELD\DWG\ACAD-200701007.CE.C701.LP.DWG

PLANT_SCHEDULE

SYMBOL	BOTANICAL NAME	COMMON NAME	CONT	CAL	QTY	REMARKS
TREES						
Ace-x	Acer freemanii `Armstrong`	Freeman Maple	B & B	2"Cal	3	2
Ace-s	Acer saccharum `Legacy`	Legacy Sugar Maple	B & B	2"Cal	7	strong central leader, symmetrical, full, matched
Ame-x	Amelanchier x grandiflora `Autumn Brilliance`	`Autumn Brilliance` Serviceberry	B & B	6'-7' ht	6	multi-trunk, 3-5 trunks, symmetrical, full
Gle-s	Gleditsia triacanthos `Skyline`	Skyline Honey Locust	B & B	2"Cal	5	strong central leader, symmetrical, full, matched
Lir-t	Liriodendron tulipifera	Tulip Tree	B & B	2"Cal	2	strong central leader, symmetrical, full, matched
Mal-x	Malus x `Red Jewel`	Crab Apple	B & B	1.5"Cal	4	
Que-r	Quercus rubra	Red Oak	B & B	2"Cal	6	spring dug, strong central leader, symmetrical, full, matched
Zel-s	Zelkova serrata	Sawleaf Zelkova	B & B	2"Cal	3	
SHRUBS						
Bux-x	Buxus x `Green Gem`	Green Gem Boxwood	Container	18"	37	Space @ 2'-0" O.C.
Deu-c	Deutzia gracilis `Chardonnay Pearls` TM	Chardonnay Pearls Deutzia	Container	24"	30	Space @ 3'-0" O.C.
Ile-v	Ilex verticillata `Red Sprite`	Red Sprite Winterberry	Container	24"	52	Provide 1 Jim Dandy per grouping
Jun-c	Juniperus conferta `Blue Pacific`	Blue Pacific Juniper	Container	24" spread	10	space @ 5'-0" o.c.
Jun-v	Juniperus virginiana `Grey Owl`	Grey Owl Juniper	Container	18" spread	48	Space @ 3'-0" O.C.
Myr-p	Myrica pensylvanica `Morton`	Silver Sprite Bayberry	Container	30"	2	space @ 5'-0" o.c.
Vib-x	Viburnum x juddii	Judd Viburnum	Container	24"	43	space @ 5'-0" o.c.
GRASSES						2
Cal-k	Calamagrostis x acutiflora `Karl Foerster`	Feather Reed Grass	pot	#2	42	Space @ 3'-0" O.C.
Pan-v	Panicum virgatum `Heavy Metal`	Blue Switch Grass	pot	#2	31	Space @ 3'-0" O.C.
Spo-h	Sporobolus heterolepis `Tara`	Prairie Dropseed	pot	#1	83	Space @ 2'-0" O.C.

1

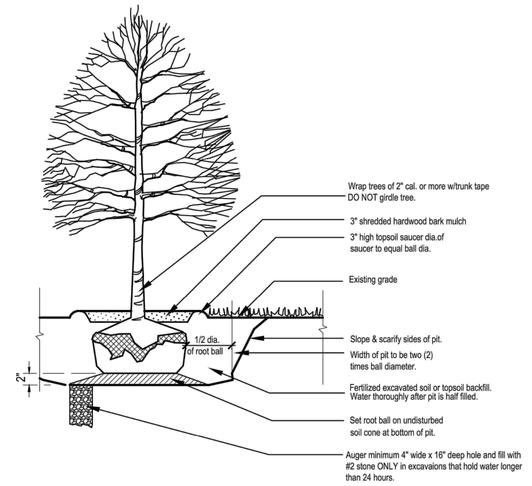

TREE PLANTING
Not to Scale

color to be selected by Owner

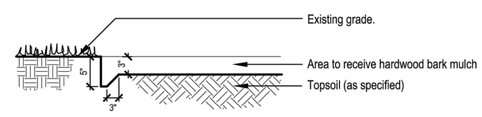

SPADE EDGE
Not to Scale

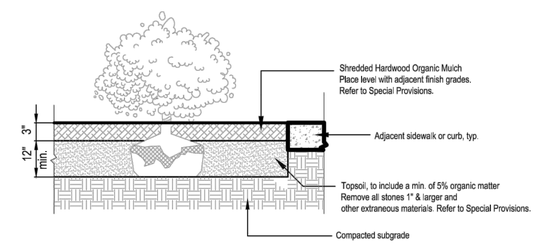

LANDSCAPE BED PREPARATION
Not to Scale

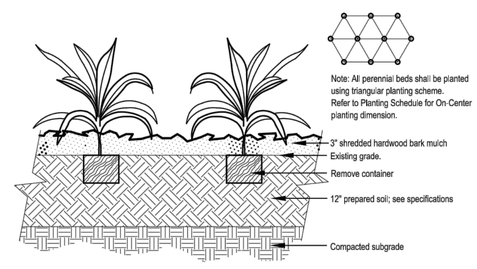

PERENNIAL PLANTING
Not to Scale

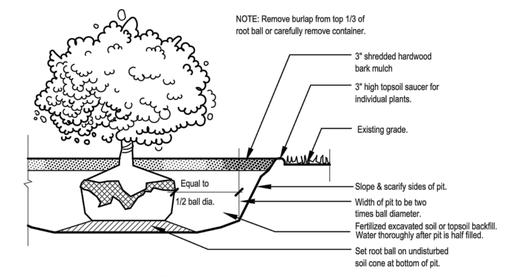

SHRUB PLANTING
Not to Scale

CVS pharmacy

12,900 TYPE-A
CHAMFER DRIVE-THRU

STORE NUMBER: 10591

161ST STREET AND SPRING MILL ROAD
WESTFIELD, INDIANA

PROJECT TYPE: NEW STORE
DEAL TYPE:
CS PROJECT NUMBER: 071776

ARCHITECT OF RECORD

CONSULTANT:

AMERICAN STRUCTUREPOINT INC.
7260 SHADELAND STATION
INDIANAPOLIS, INDIANA 46256
p:(317) 547-5580 f:(317) 543-0270
www.structurepoint.com

DEVELOPER:

TMC Indiana 2, LLC
501 Pennsylvania Pkwy.
Suite 160
Indianapolis, Indiana 46280
Phone (317) 705-8800
Contact: Craig Forgey

SEAL:

ALYSSA P. PRAZEAU
REGISTERED
No. 2002-132
STATE OF INDIANA
LANDSCAPE ARCHITECT

REVISIONS:

1	TAC COMMENTS	07-10-2015
2	OWNER COMMENTS	07-14-2015

PLANNING MGR:	JLW
DRAWING BY:	RCB
DATE:	05-29-2015
JOB NUMBER:	2007.01007

TITLE:
PLANTING DETAILS

SHEET NUMBER:
C702

COMMENTS:

PRINT DATE: 7/15/15
PLOT SCALE: 1:2.5849 EDIT DATE: 7/14/15 – 5:08 PM EDITED BY: APRAZEAU DRAWING FILE: M:\15-860 CVS WESTFIELD\DWG\ACAD-200701007.CE.C701.LP.DWG

* Z = LUMINAIRE MOUNTING HEIGHT A.F.G.

Luminaire Location Summary						
LumNo	Label	X	Y	Z *	Orient	Tilt
1	OB	604	208	9.33	270	0
2	OB	602	210	9.33	270	0
3	OB	609	213	9.33	270	0
4	OB	607	215	9.33	270	0
5	WP	551.8	207.2	12	270	0
6	WP	576.8	207.2	12	270	0
7	X	512.9	207.9	7	180	0
8	X	512.9	228.1	7	180	0
9	X	513.4	345.7	7	90	0
10	X	526.9	345.7	7	90	0
11	X	568.4	345.1	7	90	0
12	X	589	345	7	90	0
13	X	609.1	345	7	90	0
14	X	512.1	344.2	7	180	0
15	X	512.2	330.8	7	180	0
16	X	512.8	293.7	7	180	0
17	X	610.4	343.7	7	0	0
18	X	610.4	323.6	7	0	0
19	X2	510	419	17	270	0
20	X2	616	419	17	270	0
21	X2	659	237	17	180	0
22	X2	560.4	419	17	270	0
23	X2	437	343.2	17	0	0
24	X2	437	216.8	17	0	0
25	X2	437	274.9	17	0	0
26	X2	659	322.1	17	180	0
27	X2	659	274	17	180	0

* HUBBELL IS NOT RESPONSIBLE FOR THE PERFORMANCE OF LUMINAIRE MANUFACTURED BY OTHERS

Luminaire Schedule											
Symbol	Label	Qty	Description	Arrangement	Lum. Watts	Lum. Lumens	LMF	LDD	BF	LLF
	OB	4	PT2013-E0155	SINGLE	19.9	1130	0.950	0.900	1.000	0.855
	WP	2	DSXW1 LED 10C 1000 40K TFTM MVOLT	SINGLE	40	3065	0.950	0.950	1.000	0.903
	X	12	UCS-ANG-12LED-BW 5100K	SINGLE	32	1086	0.950	0.950	1.000	0.903
	X2	9	QTY 2 - UCL-T4-56LED-5K-700-HSS	ROTATED OPTICS	129.9	5761	0.950	0.950	1.000	0.903

Calculation Summary								
Label	Description	Units	Avg	Max	Min	Avg/Min	Max/Min
CVS PARKING	1.0 FC MINIMUM	Fc	2.96	7.0	0.5	5.92	14.00

All Parking Area lighting shall be reduced (e.g., turned off or dimmed) by a minimum of thirty percent (30%) within thirty (30) minutes of closing of the last business or no later than 11:00 p.m

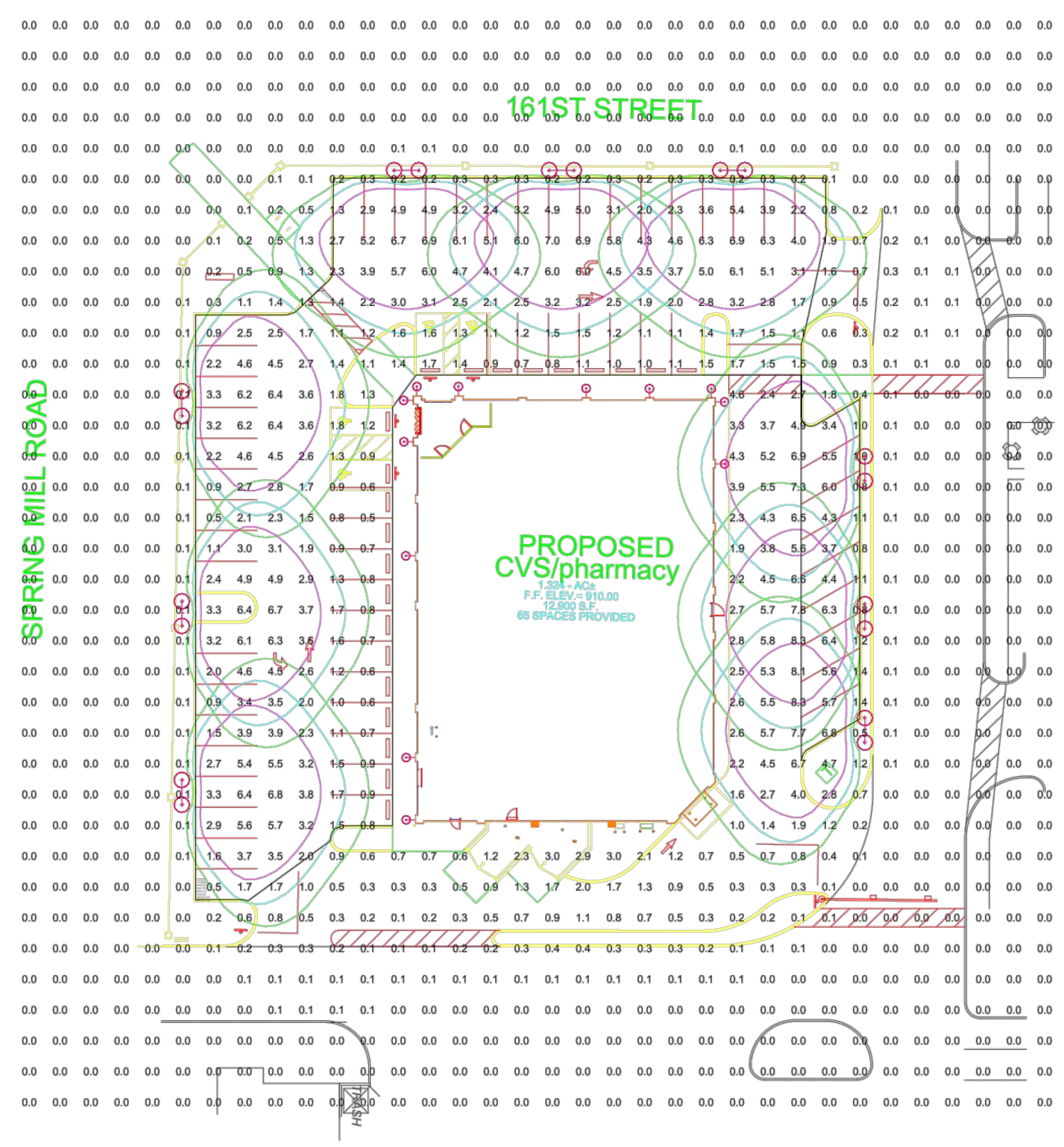

FOR PRICING CONTACT

NESCO
40 Hudson Rd
Canton, MA 02021
Tel: 781-828-9494
Fax: 781-575-1398
E-Mail: CVSplans@nescoweb.com

Y
0,0 X

Graphic Scale
40 20 0 40 80

NOT A CONSTRUCTION DOCUMENT - FOR DESIGN PURPOSES ONLY

1. THIS LIGHTING DESIGN IS BASED ON LIMITED INFORMATION SUPPLIED BY OTHERS TO HUBBELL LIGHTING. SITE DETAILS PROVIDED HEREON ARE REPRODUCED ONLY AS A VISUALIZATION AID. FIELD DEVIATIONS MAY SIGNIFICANTLY AFFECT PREDICTED PERFORMANCE. PRIOR TO INSTALLATION, CRITICAL SITE INFORMATION (POLE LOCATIONS, ORIENTATION, MOUNTING HEIGHT, ETC.) SHOULD BE COORDINATED WITH THE CONTRACTOR AND/OR SPECIFIER RESPONSIBLE FOR THE PROJECT.
2. LUMINAIRE DATA IS TESTED TO INDUSTRY STANDARDS UNDER LABORATORY CONDITIONS. OPERATING VOLTAGE AND NORMAL MANUFACTURING TOLERANCES OF LAMP, BALLAST, AND LUMINAIRE MAY AFFECT FIELD RESULTS.
3. CONFORMANCE TO FACILITY CODE AND OTHER LOCAL REQUIREMENTS IS THE RESPONSIBILITY OF THE OWNER AND/OR THE OWNER'S REPRESENTATIVE.

REFERENCE ANGLE(S): 180° PLAN NORTH 0° 270°
REVISED FROM DRAWING NUMBER(S): 1575507
TITLE: CVS #10591 WESTFIELD, IN
Hubbell Lighting, Inc. 701 MILLENNIUM BLVD GREENVILLE, SC 29607
SCALE: 1" = 40' DATE: 7/15/2015 DW'N: ADC AP'VD:
DRAWING NO. 1575568

UCS – Universe Small Housing Scale TYPE

- LED technology
- Modular system offers five luminous choices and five hood options for customization to complement site design
- Full cutoff option available
- Pole, wall, or pendant mounting options
- Opal glass lens, IES Type 5 distribution for soft, general lighting
- Powder coat finish in 13 standard colors with a polymer primer sealer

1. LUMINAIRE	2. LUMINOUS HOOD	3. LAMP/BALLAST	4. COLOR	5. OPTIONS	6. OPTIONS (internal)	7. MOUNTING

UCS

1. LUMINAIRE
☐ UCS Universe small

2. LUMINOUS /HOOD
NO LUMINOUS & HOOD
ANGLED ☐ ANG; BELL ☐ BEL; FLARED ☐ FLR; STRAIGHT ☐ STR; SKIRTED ☐ SKB

LUMINOUS & HOOD
4 LUMINOUS WINDOWS: ☐ WND-ANG ☐ WND-BEL ☐ WND-FLR ☐ WND-STR ☐ WND-SKB
SOLID RINGS: ☐ SR-ANG ☐ SR-BEL ☐ SR-FLR ☐ SR-STR ☐ SR-SKB
VERTICAL SLOTS: ☐ VSL-ANG ☐ VSL-BEL ☐ VSL-FLR ☐ VSL-STR ☐ VSL-SKB
LUMINOUS RINGS: ☐ LUM-ANG ☐ LUM-BEL ☐ LUM-FLR ☐ LUM-STR ☐ LUM-SKB

3. LAMP/BALLAST
LED *(Warm white (3000K), Neutral white (4200K), Bright white (5100K). 32 watts. 120 thru 277 volt)*
☐ 12LED-WW ☐ 12LED-NW ☐ 12LED-BW

COMPACT FLUORESCENT (*120 thru 277 volt ballast. -18°C min start temp. Specify wattage)*
☐ CF *(4 pin, 26, 32 or 42 watt lamp)*

METAL HALIDE
Medium base, ED-17 lamp. 120/208/240/277 volt ballast
☐ 50MH ☐ 70MH
G12 base, T-6 ceramic lamp
☐ 70MHT6 *(120/277/347 volt ballast)*

HIGH PRESSURE SODIUM
Medium base, ED-17 lamp
☐ 50HPS *(120/277 volt ballast)*
☐ 70HPS *(120/208/240/277 volt ballast)*

All ballasts and LED drivers are factory wired for 277 volts, unless specified. Lamps not included (except for LED options). For pole mounted fixtures, the ballast is located in the arm.

4. COLOR
☐ AWT *(Arctic White)*
☐ BLK *(Black)*
☐ MTB *(Matte Black)*
☐ DGN *(Dark Green)*
☐ DBZ *(Dark Bronze)*
☐ WRZ *(Wheathered Bronse)*
☐ BRM *(Metallic Bronze)*
☐ VBL *(Verde Blue)*
☐ CRT *(Corten)*
☐ MAL *(Matte Aluminum)*
☐ MDG *(Medium Grey)*
☐ ATG *(Antique Green)*
☐ LGY *(Light Grey)*
☐ RAL/PREMIUM COLOR *(Provide RAL)*
☐ CUSTOM COLOR *(Provide color chip for matching)*

5. OPTIONS - HOOD
The natural copper and stainless steel hoods are unfinished to develop a patina over time. All hoods have the under side finished in high reflectance white.
☐ COP *(Copper)* ☐ STS *(Stainless steel)*

6. OPTIONS - INTERNAL
☐ SLC *(Internal sleeve to block light when luminous element chosen)*
☐ 347 *(For HID, except 50MH & 50HPS, not available with LED)*
☐ FCO *(Full cutoff shield. Replaces luminous element)*

7. MOUNTING – *Must choose one*
WALL MOUNT (*Integral ballast. Uses the mounting plate with a prewired ballast)*
☐ WCV (*Curved arm)*
☐ WST (*Straight arm)*

POLE MOUNT
Single arm, fits over a 3"/75mm pole
☐ PCVS (*Curved arm)* ☐ PSTS *(Straight arm)*
Twin arm, fits over 4"/100mm pole. (*The top 6"/150mm of the pole top shall have an open, clear unobstructed area for the ballast assembly)*
☐ PCVT (*Curved arm)* ☐ PSTT *(Straight arm)*

PENDANT MOUNT (*48"/1220mm stem*)
☐ PMS (*Swivel fits over a standard octagonal j-box. Remote ballast required)*
☐ SBE (*Surface mounted ballast enclosure)*

Visit www.aal.net for Arms, Poles & Accessories Specification Guide

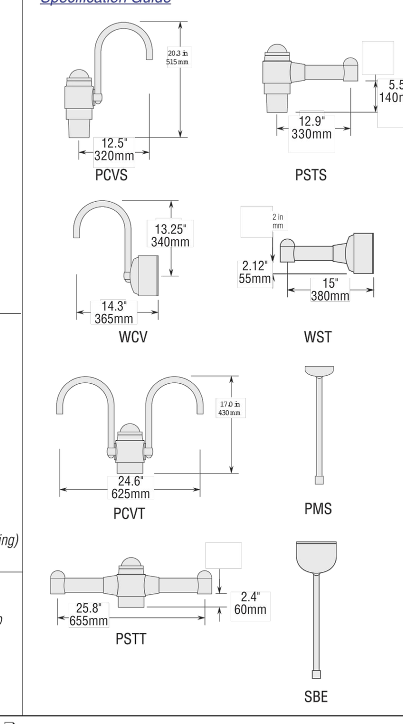

SPECIFICATIONS
HOUSING
The fixture and ballast housing shall be one piece cast aluminum. The luminous rings shall be acrylic with an aluminum spacer and stainless steel rods. The lens shall be tempered, borosilicate opal glass. The lens shall be gasketed and screwed onto the housing for lamp access. The hoods shall be heavy gage spun aluminum with hemmed edges for added rigidity.

All internal and external hardware shall be stainless steel

FULL CUTOFF
The full cutoff shield is used in place of the luminous element when the FCO option is chosen. It lowers the hood to cover the opal lens, providing IES full cutoff classification meaning there is zero light emitted at 90° horizontal or above. The O.A.H of the UCS fixture with the FCO option is 14.25"/362mm with the bell hood, 14"/356mm with the skirted bell hood, or 13.25"/337mm for others.

ELECTRICAL
The ballast shall be mounted to a cast plate, prewired with a quick disconnect plug. HID ballasts are high power factor, rated for -30°C starting. Sockets are medium base, pulse rated porcelain. Compact fluorescent socket is for a 26, 32 or 42 watt lamp, 4 pin, GX24q-4, with an electronic ballast, -18°C starting temperature. Ballasts are wired at the factory for 277 volts, unless specified. Standard LED color temperatures are 3000K, 4000K and 5000K. Other color temperatures available. Please contact factory. LED constant current driver operates at 700mA.

See next page

TYPE
JOB
NOTES

UCS – Universe Small Housing Scale TYPE

INSTALLATION & MOUNTING
Pole mount: The fixture shall be welded to the arm assembly for both the wall and pole mounting models. The single fixture pole mounted arms PCVS and PSTS shall have an integral ballast compartment, and slip over a 3"/75mm pole. The twin fixture pole mounted arms PCVT and PSTT shall have an integral ballast compartment, and slip over an open top, 4"/100mm pole. The top 6"/150mm of the pole top shall have a clear, unobstructed area for the ballast assembly.

Wall mount: The wall mounted ballast housing shall be welded together with the arm and fixture as a unitized assembly. A cast aluminum wall plate shall have the ballast assembly installed and prewired for easy installation. The fixture assembly shall slip over the wall plate and secure with three stainless steel set screws. The mounting system shall allow for horizontal adjustment to level the fixture independent of the mounting plate orientation.

Pendant mount SBE
The ballast is factory assembled and wired to the mounting plate. A .75"/18mm hole is provided for wiring access to the the J-box. Seal the back plate to the wall surface with an appropriate silicone caulk. Three .375"/10mm holes on 120° centers, on a 5"/125mm circle are provided on the back plate for anchoring. Use appropriate stainless steel fasteners for anchoring.

FINISH
Fixture finish consists of a five stage pretreatment regimen with a polymer primer sealer, oven dry off and top coated with a thermoset super TGIC polyester powder coat finish. The finish shall meet the AAMA 605.2 performance specification which includes passing a 3000 hour salt spray test for corrosion resistance.

CERTIFICATION
The fixture shall be listed with ETL and U.L. for outdoor, wet location use, UL1598 and Canadian CSA Std. C22.2 No.250.

WARRANTY / TERMS AND CONDITIONS OF SALE
Download:
http://www.hubbelllighting.com/resources/warranty/

DIMENSIONS

HOOD	NO LUMINOUS	4 LUMIOUS WINDOW (WIN)	SOLID RINGS (SR)	VERTICAL SLOTS (VSL)	LUMIOUS RINGS (LUM)
ANG DIA: 15"/380mm	HT: 12.75"/325mm EPA: 0.29	HT: 12.75"/325mm EPA: 0.31	HT: 13.5"/340mm EPA: 0.32	HT: 12.75"/325mm EPA: 0.31	HT: 13.5"/340mm EPA: 0.29
BEL DIA: 15"/380mm	HT: 12.75"/325mm EPA: 0.30	HT: 12.75"/325mm EPA: 0.34	HT: 13"/330mm EPA: 0.34	HT: 12.75"/325mm EPA: 0.34	HT: 13"/330mm EPA: 0.33
FLR DIA: 15"/380mm	HT: 12.75"/325mm EPA: 0.28	HT: 12.75"/325mm EPA: 0.30	HT: 13"/330mm EPA: 0.30	HT: 12.75"/325mm EPA: 0.30	HT: 13"/330mm EPA: 0.28
STR DIA: 16"/405mm	HT: 12.75"/325mm EPA: 0.27	HT: 12.75"/325mm EPA: 0.28	HT: 12.75"/325mm EPA: 0.28	HT: 12.75"/325mm EPA: 0.28	HT: 12.75"/325mm EPA: 0.27
SKB DIA: 15"/380mm	HT: 13"/330mm EPA: 0.38	HT: 16"/405mm EPA: 0.43	HT: 16"/405mm EPA: 0.43	HT: 16"/405mm EPA: 0.43	HT: 15"/380mm EPA: 0.41

UCS 70MH WATTAGE: 95 LUMEN OUTPUT: 3371 EFFICACY: 58.9

B1 U3 G2

		%	LUMEN
FORWARD LIGHT			
FL	30°	4.9%	276
FM	60°	12.9%	725
FH	80°	8.4%	469
FVH	90°	2.2%	124
BACK LIGHT			
BL	30°	4.9%	276
BM	60°	12.9%	725
BH	80°	8.4%	469
BVH	90°	2.2%	124
UPLIGHT			
UL	100°	2.3%	127
UH	180°	1.0%	54

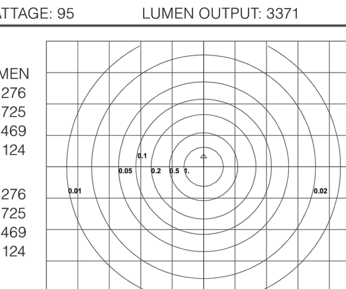

Mounting Height	Multiplier
10	4.000
15	1.778
20	1.000
25	0.640
30	0.444
35	0.327
40	0.250
45	0.198
50	0.160

UPLIGHT 94.6%
DOWNLIGHT 5.4%

UCS12LED BW WATTAGE: 32 LUMEN OUTPUT: 1085 EFFICACY: 33.9

B1 U2 G1

		%	LUMEN
FORWARD LIGHT			
FL	30°	8.4%	91
FM	60°	20.4%	221
FH	80°	14.5%	157
FVH	90°	4.7%	51
BACK LIGHT			
BL	30°	8.4%	91
BM	60°	20.4%	221
BH	80°	14.5%	157
BVH	90°	4.7%	51
UPLIGHT			
UL	100°	3.7%	40
UH	180°	0.6%	6

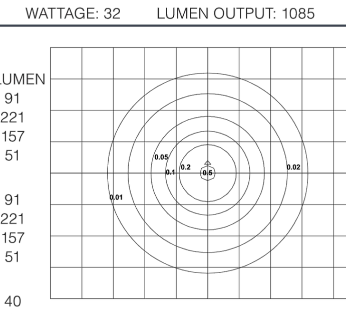

Mounting Height	Multiplier
10	4.000
15	1.778
20	1.000
25	0.640
30	0.444
35	0.327
40	0.250
45	0.198
50	0.160

UPLIGHT 95.7%
DOWNLIGHT 4.3%

IES files can be found at www.aal.net

AAL reserves the right to change product specifications without notice.

CVS pharmacy

12,900 TYPE-A CHAMFER DRIVE-THRU
STORE NUMBER: 10591
161ST STREET AND SPRING MILL ROAD
WESTFIELD, INDIANA
PROJECT TYPE: NEW STORE
DEAL TYPE:
CS PROJECT NUMBER: 071776

ARCHITECT OF RECORD

CONSULTANT:

AMERICAN STRUCTUREPOINT INC.
7260 SHADELAND STATION
INDIANAPOLIS, INDIANA 46256
p:(317) 547-5580 f:(317) 543-0270
www.structurepoint.com

DEVELOPER:

TMC Indiana 2, LLC
501 Pennsylvania Pkwy.
Suite 160
Indianapolis, Indiana 46280
Phone (317) 705-8800
Contact: Craig Forgey

SEAL:
APPROVAL PENDING
NOT FOR CONSTRUCTION

REVISIONS:

1	TAC COMMENTS	07-10-2015

PLANNING MGR: JLW
DRAWING BY: RCB
DATE: 05-29-2015
JOB NUMBER: 2007.01007
TITLE:
SITE PHOTOMETRIC PLAN
SHEET NUMBER:
C801
COMMENTS:

PRINT DATE: 7/17/15 EDIT DATE: 7/17/15 - 12:01 PM EDITED BY: JWILKERSON DRAWING FILE: P:\IN2007\1007\D. DRAWINGS\CIVIL\C. CONSTRUCTION DOCUMENTS\2007 01007.CE.C801.SLP.DWG
PLOT SCALE: 1:2.5849

Universe® Collection Large LED – UCL

TYPE

FEATURES

- DLC QPL Listed
- Reliable, uniform, glare free illumination
- Types II, III, IV, V and custom distributions
- 3000K, 4000K, 5000K CCT
- 0-10V dimming ready
- Integral surge suppression
- LifeShield™ thermal protection
- 13 standard powder coat finishes
- Upgrade Kits

SPECIFICATIONS

The first dimension is the height of fixtures with LEDs or horizontal reflectors.

HOOD	HOOD ONLY	4 LUMINOUS WINDOW (WND)	SOLID RINGS (SR)	VERTICAL SLOTS (VSL)	LUMINOUS RINGS (LUM)
Angled (ANG)					
DIA: 30"/760 mm	*HT: 21.4"/454 mm WT: 47 lbs EPA: 1.12*	*HT: 26.7"/680 mm WT: 28.55 lbs EPA: .60*	*HT: 26.7"/680 mm WT: 55 lbs EPA: 1.36*	*HT: 26.7"/680 mm WT: 48 lbs EPA: 1.35*	*HT: 26.7"/680 mm WT:50 lbs EPA: 1.36*
Bell (BEL)					
DIA: 30"/760 mm	*HT: 22"/560 mm WT: 47 lbs EPA: 1.16*	*HT: 26.7"/680 mm WT: 48 lbs EPA: 1.38*	*HT: 26.7"/680 mm WT: 55 lbs EPA: 1.39*	*HT: 26.7"/680 mm WT: 48 lbs EPA: 1.38*	*HT: 26.7"/680 mm WT: 50 lbs EPA: 1.39*
Flared (FLR)					
DIA: 32"/810 mm	*HT: 21"/535 mm WT: 47 lbs EPA: 1.05*	*HT: 26.7"/680 mm WT: 48 lbs EPA: 1.27*	*HT: 26.7"/680 mm WT: 55 lbs EPA: 1.28*	*HT: 26.7"/680 mm WT: 48 lbs EPA: 1.27*	*HT: 26.7"/680 mm WT: 50 lbs EPA: 1.28*
Skirted Bell (SKB)					
DIA: 32"/810 mm	*HT: 27.25"/693 mm WT: 48 lbs EPA: 1.72*	*HT: 32.5"/826 mm WT: 49 lbs EPA: 1.95*	*HT: 32.25"/820 mm WT: 56 lbs EPA: 1.96*	*HT: 32.5"/826 mm WT: 49 lbs EPA: 1.95*	*HT: 32.25"/820 mm WT: 50 lbs EPA: 1.96*

architectural arealighting
ARCHITECTURAL AREA LIGHTING
16555 East Gale Ave. I City of Industry I CA 91745
P 626.968.5666 I F 626.369.2695 I www.aal.net

Copyright © 2014 Rev 2.15

JOB
TYPE
NOTES

Universe® Collection Large LED – UCL

TYPE

ORDERING INFORMATION

MODEL

1	2	3	4	5	6	7	8
UCL							
Luminous/Hood	Distribution	CCT	Drive Current	Color	Options	Controls	Mounting

1. LUMINOUS ELEMENTS/HOOD

HOOD ONLY
- ☐ ANG Angled
- ☐ BEL Bell
- ☐ FLR Flared
- ☐ SKB Skirted Bell

LUMINOUS & HOOD

Four Luminous Windows
- ☐ WND-ANG
- ☐ WND-BEL
- ☐ WND-FLR
- ☐ WND-SKB

Solid Rings
- ☐ SR-ANG
- ☐ SR-BEL
- ☐ SR-FLR
- ☐ SR-SKB

Vertical Slots
- ☐ VSL-ANG
- ☐ VSL-BEL
- ☐ VSL-FLR
- ☐ VSL-SKB

Luminous Rings
- ☐ LUM-ANG
- ☐ LUM-BEL
- ☐ LUM-FLR
- ☐ LUM-SKB

Luminous Rings Color Option
- ☐ BL *(Blue inner lens)*
- ☐ RD *(Red inner lens)*
- ☐ GRN *(Green inner lens)*

2. DISTRIBUTION

MicroCore *Precision aimed optics*
- ☐ T2-56LED
- ☐ T3-56LED
- ☐ T4-56LED
- ☐ T5-56LED
- ☐ TL-56LED
- ☐ TR-56LED

3. COLOR TEMPERATURE
- ☐ 3K ☐ 4K ☐ 5K

4. DRIVE CURRENT
- ☐ 700 ☐ 450

5. COLOR
- ☐ AWT ☐ CRT
- ☐ BLK ☐ MAL
- ☐ MTB ☐ MDG
- ☐ DGN ☐ ATG
- ☐ DBZ ☐ LGY
- ☐ WRZ ☐ RAL/PREMIUM COLOR
- ☐ BRM ☐ CUSTOM COLOR
- ☐ VBL

6. OPTIONS

HOOD OPTIONS – *May choose one*
(The natural copper and stainless steel hoods are unfinished to develop a patina over time.
- ☐ COP *(Copper)*
- ☐ STS *(Stainless steel)*

LENS OPTIONS – *May choose one*
- ☐ FTG *(Clear flat glass lens)*
- ☐ FLD *(Lightly diffused finish on flat glass lens)*

OTHERS
- ☐ SLC *(Luminous element remains unlit during normal operation)*
- ☐ HSS *(House side shield)*

7. CONTROL
- ☐ PCA-C *(Rotatable photocell-Contemporary)*

SCP (Sensor Control Programmable) pole accessory is available to provide occupancy detection for outdoor applications meeting California Title 24. For complete spec sheet and ordering information, visit *www.aal.net/products/sensor_control_programmable/*

8. MOUNTING – *Must choose one*

POLE MOUNT
- ☐ SLA3 ☐ SLA4
- ☐ SLA4-2 ☐ SLA7
- ☐ SLA7-2 ☐ SLA7(5)
- ☐ SLA7(5)-2 ☐ SLA8D
- ☐ SLA9 ☐ SLA9-2
- ☐ SLA10 ☐ SLA10-2
- ☐ SLA16 ☐ SLA16-2
- ☐ SLA17 ☐ SLA17-2
- ☐ SLA17(5) ☐ SLA17(5)-2
- ☐ SLA18 ☐ SLA18-2
- ☐ SLA20 ☐ SLA20-2
- ☐ SLA20A ☐ SLA20A-2
- ☐ SLA20B ☐ SLA20B-2
- ☐ SLA20C ☐ SLA20C-2
- ☐ SLA20D ☐ SLA20D-2
- ☐ SLA22D ☐ SLA24
- ☐ SLA24-2 ☐ SLA24(5)
- ☐ SLA24(5)-2 ☐ TRA4
- ☐ TRA7 ☐ TRA7-2
- ☐ TRA8 ☐ TRA8-2
- ☐ TRA9 ☐ TRA9-2

WALL MOUNT
- ☐ WMA4 ☐ WMA5
- ☐ WMA6 ☐ WMA8
- ☐ WMA9D ☐ WMA10
- ☐ WMA11 ☐ WMA12
- ☐ WMA16 ☐ WMA17
- ☐ WMA18 ☐ WMA20
- ☐ WMA22D ☐ WMA24
- ☐ WMA37 ☐ WMA38
- ☐ WMA39

Visit www.aal.net for Arms, Poles & Accessories Specification Guide

architectural arealighting
ARCHITECTURAL AREA LIGHTING
16555 East Gale Ave. I City of Industry I CA 91745
P 626.968.5666 I F 626.369.2695 I www.aal.net

Copyright © 2014 Rev 2.15

JOB
TYPE
NOTES

Universe® Collection Large LED – UCL

TYPE

LUMINAIRE PERFORMANCE

Optical System	Secondary Lens or Shield	Distribution	Light Engine	3K Delivered Lumens	3K Efficacy (lm/w)	3K Bug Rating B	3K Bug Rating U	3K Bug Rating G	4K Delivered Lumens	4K Efficacy (lm/w)	4K Bug Rating B	4K Bug Rating U	4K Bug Rating G	5K Delivered Lumens	5K Efficacy (lm/w)	5K Bug Rating B	5K Bug Rating U	5K Bug Rating G	Drive Current (ma)	System Watts
MicroCore	No Lens (Standard)	TYPE 2	T2-56LED	8103	62	2	0	2	9636	74	2	0	2	10950	84	3	0	3	700	132
		TYPE 3	T3-56LED	7976	61	2	0	2	9486	73	2	0	2	10779	83	2	0	2		
		TYPE 4	T4-56LED	7919	61	1	0	2	9397	72	1	0	2	10702	82	1	0	3		
		TYPE 5	T5-56LED	8388	65	3	0	2	9724	75	3	0	2	11050	85	4	0	2		
		45° LEFT	TL-56LED	7560	58	1	0	2	9053	70	1	0	2	9949	77	1	0	2		
		45° RIGHT	TR-56LED	7560	58	1	0	2	9053	70	1	0	2	9949	77	1	0	2		
	House Side Shield	TYPE 4	T4-56LED-..-HSS	5761	44	0	0	2	6797	52	0	0	2	7604	58	0	0	2		
	No Lens (Standard)	TYPE 2	T2-56LED	5189	62	2	0	2	6167	74	2	0	2	7008	84	2	0	2	450	84
		TYPE 3	T3-56LED	5105	61	1	0	2	6071	73	1	0	2	6898	83	2	0	2		
		TYPE 4	T4-56LED	5068	61	1	0	2	6014	72	1	0	2	6850	82	1	0	2		
		TYPE 5	T5-56LED	5375	64	3	0	1	6223	74	3	0	1	7072	85	3	0	2		
		45° LEFT	TL-56LED	4839	58	1	0	2	5794	69	1	0	2	6367	76	1	0	2		
		45° RIGHT	TR-56LED	4839	58	1	0	2	5794	69	1	0	2	6367	76	1	0	2		
	House Side Shield	TYPE 4	T4-56LED-..-HSS	3687	44	0	0	2	4090	49	0	0	2	4839	58	0	0	2		

* DesignLights Consortium® Qualified Product

ELECTRICAL CHARACTERISTICS

Optical System	Ordering Code		LED Drive mA	System Watts	Driver: Line Voltage VAC	Line Voltage HZ	Amps AC 120	Amps AC 277	Min. Power Factor	Max THD (%)	Operating Temp. Range	Dimming: Dimming Range	Source current out of 0-10V purple wire: Min	Typical	Max	Absolute voltage range on 0-10V (+) purple wire: Min	Typical	Max
MicroCore	56LED	700	700	132	120-277	50/60	1.1	0.48	≥.9	20	-30°C TO +40°C	10% TO 100%	0 MA	-	8 mA	-2.0 V	-	+15 V
		450	450	84			0.71	0.31										

LED COLOR

Consult factory for Amber, Turtle Friendly, Gulf Coast and Observatory applications.

	Ordering Code 3K	4K	5K
CRI Minimum	≥ 80	≥ 70	≥ 70
S/P Ratio	1.33	1.66	1.78

TM-21 LIFETIME CALCULATION

Optical System	Ordering Code	Ambient Environment °C	Projected Lumen Maintenance (% vs. Khrs) 15	25	50	60	100	Reported L70
MicroCore	**56LED**	15	93	91	87	85	78	>60Khrs
		25	93	91	87	85	78	

architectural arealighting
ARCHITECTURAL AREA LIGHTING
16555 East Gale Ave. I City of Industry I CA 91745
P 626.968.5666 I F 626.369.2695 I www.aal.net

Copyright © 2014 Rev 2.15

JOB
TYPE
NOTES

Universe® Collection Large LED – UCL

TYPE

SPECIFICATIONS

HOUSING
- All housing components shall be die-cast aluminum, sealed with continuous silicone rubber gaskets.
- Hood and spacers shall be heavy gauge spun aluminum with hemmed edges for added rigidity.
- Luminous rings shall be clear acrylic with an internal lens.
- Standard configurations do not require a flat lens, optional lenses shall be tempered glass
- All internal and external hardware shall be stainless steel.
- Optical bezel finish shall match the luminaire housing.

OPTICAL
- Patent pending MicroCore™ LED modules shall independently aim each light emitting diode (LED) in both horizontal rotation and vertical tilt angle.
- LEDs shall be mounted to a metal printed circuit board assembly (PCBA) with a uniform conformal coating over the panel surface and electrical features.
- LED optics shall be clear injection molded PMMA acrylic.
- MicroCore™ PCBA and optic shall be sealed to a die-cast anodized aluminum heat sink with an injection molded silicone rubber gasket. IP66.
- Type 4 distribution with optional House Side Shield not available with clear or diffused glass lenses. Factory installed House Side Shield is optimized for Type 4 distribution and not recommended for use with Type 2 or 3 distribution and not available with type 5 distribution.

ELECTRICAL
- Luminaires shall have integral surge protection that shall be U.L. recognized and have a surge current rating of 10,000 Amps using the industry standard 8/20uSec wave and surge rating of 372J.
- Drivers shall be U.L recognized with an inrush current maximum of <20.0 Amps maximum at 230VAC.
- Drivers shall not be compatible with current sourcing dimmers, consult factory for current list of known compatible dimming systems, approved dimmers include Lutron Diva ÂVTV, Lutron Nova NFTV and NTFTV.
- LifeShield™ shall be provided with all configurations for added protection in the event of abnormally excessive high ambient temperature conditions.

CONTROLS
- SCP shall have an integral surge protection device with a currentt rating of 10,000 Amps using the industry standard 8/20uSec wave and sure rating of 372J
- Sensor not intended for use with additional photo-control, wireless control or dimming systems.

PHOTOCELL / EGRESS ADAPTERS
- Adapter(s) shall slip over a 4"/100mm DIA. pole with the luminaire or arm slipping over the adapter to add a total of 4.5"/114mm to the overall height. Adapter(s) shall be prewired, independently rotatable 359°, and have a cast access cover with an integral lens and lanyard.
- Photocell adapter shall include an internal twist lock receptacle. Photocell by others.
- Egress adapter shall require an auxiliary 120 volt supply for operation of an integral MR16 lamp in the event of emergency. The lamp may be aimed and locked into position with an adjustment range of 15°-45°. Adapter shall have a socket that accepts miniature bi-pin MR16 lamps up to 50 watts, lamp by others.

SERVICING
- Luminaire shall have tool-less service access to the gear compartment. Driver and surge suppressor shall be mounted to a prewired tray with quick disconnects that may be removed from the gear compartment.

ARM MOUNTING
- Luminaire shall be attached to the arm assembly with three stainless steel bolts. The connection shall be sealed with a silicone compression gasket.
- Post top arms and brackets shall slip over a 4"/100mm O.D. or a 5"/127mm as configured and secured with six stainless steel set screws.
- Wall mounted arms and brackets shall require mounting hardware by others.

FINISH
- Luminaire finish shall consist of a five stage pretreatment regimen with a polymer primer sealer, oven dry off, and top coated with a thermoset super TGIC polyester powder coat finish.
- Luminaire finish shall meet the AAMA 605.2 performance specification which includes passing a 3000 hour salt spray test for corrosion resistance.

CERTIFICATION
- Luminaire shall be listed with ETL for outdoor, wet location use. UL1598, UL 8750 and Canadian CSA Std. C22.2 no.250.

WARRANTY / TERMS AND CONDITIONS OF SALE
Download:
http://www.hubbelllighting.com/resources/warranty/

architectural arealighting
ARCHITECTURAL AREA LIGHTING
16555 East Gale Ave. I City of Industry I CA 91745
P 626.968.5666 I F 626.369.2695 I www.aal.net

Copyright © 2014 Rev 2.15

JOB
TYPE
NOTES

CVS pharmacy

12,900 TYPE-A
CHAMFER DRIVE-THRU

STORE NUMBER: 10591

161ST STREET AND SPRING MILL ROAD
WESTFIELD, INDIANA

PROJECT TYPE: NEW STORE
DEAL TYPE:
CS PROJECT NUMBER: 071776

ARCHITECT OF RECORD

CONSULTANT:

AMERICAN STRUCTUREPOINT INC.
7260 SHADELAND STATION
INDIANAPOLIS, INDIANA 46256
p:(317) 547-5580 f:(317) 543-0270
www.structurepoint.com

DEVELOPER:

TMC Indiana 2, LLC
501 Pennsylvania Pkwy.
Suite 160
Indianapolis, Indiana 46280
Phone (317) 705-8800
Contact: Craig Forgey

SEAL:

APPROVAL PENDING
NOT FOR CONSTRUCTION

REVISIONS:

1	TAC COMMENTS	07-10-2015

PLANNING MGR:	JLW
DRAWING BY:	RCB
DATE:	05-29-2015
JOB NUMBER:	2007.01007

TITLE:
SITE PHOTOMETRIC PLAN

SHEET NUMBER:

C802

COMMENTS:

PRINT DATE: 7/17/15
PLOT SCALE: 1:2.5849
EDIT DATE: 7/17/15 – 12:01 PM EDITED BY: JWILKERSON DRAWING FILE: P:\N2007\1007\D. DRAWINGS\CIVIL\C. CONSTRUCTION DOCUMENTS\20070107.CE.C801.SLP.DWG