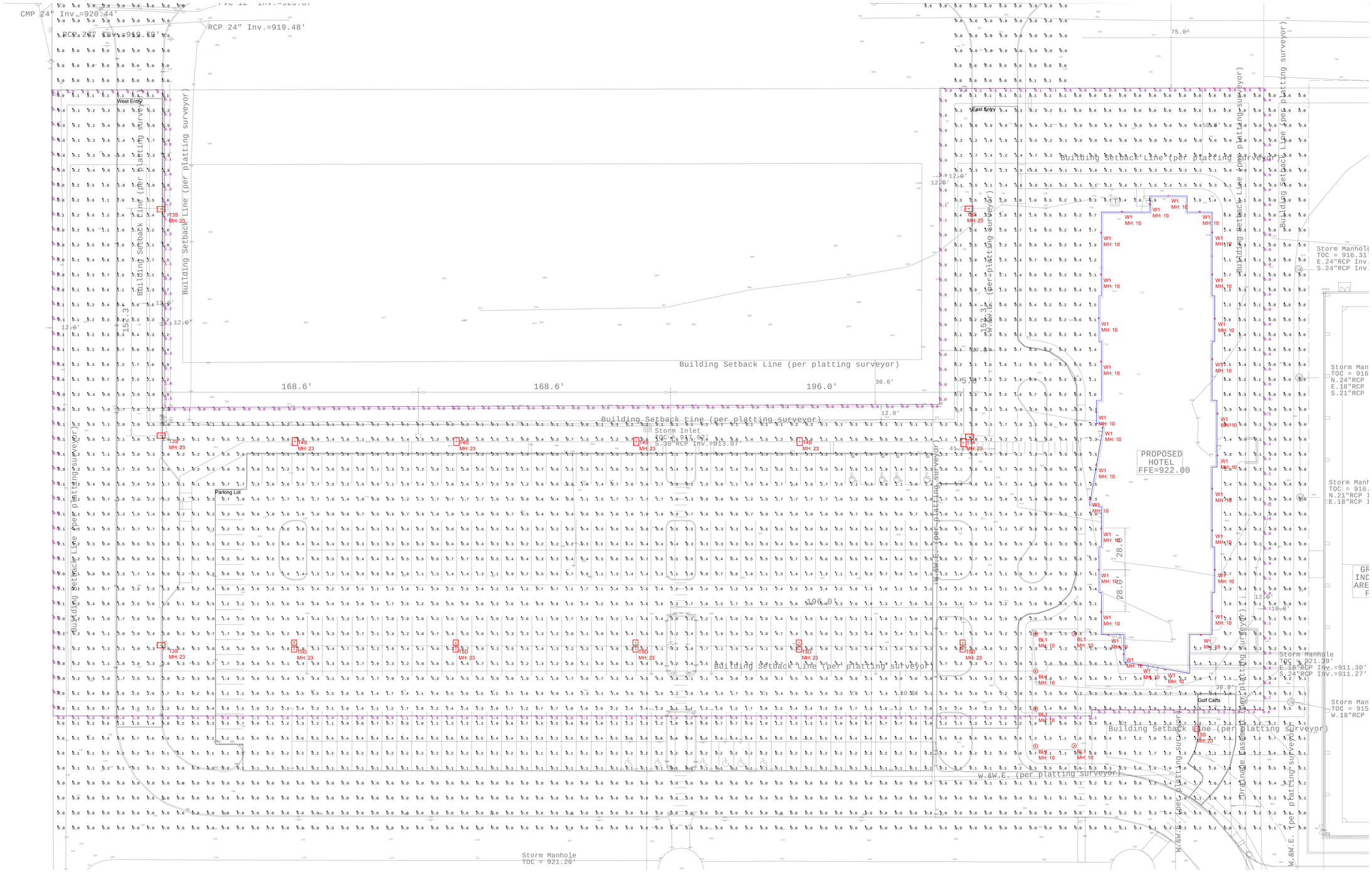

Luminaire Schedule								
Symbol	Qty	Label	Arrangement	LLF	Description	Arrangement Lumens	Arangement Watts	Total Watts
	4	T3S	SINGLE	0.950	USA LUM-III-80PLED-NW-700-HS & SNTS-204-11-1 & 3' concrete base (by others)	12606	183.4	733.6
	4	T4S	SINGLE	0.950	USA LUM-IV-80PLED-NW-700-HS & SNTS-204-11-1 & 3' concrete base (by others)	13086	183.4	733.6
	1	T5S	SINGLE	0.950	USA LUM-V-SQ-80PLED-NW-700 & SNTS-204-11-1 & 3' concrete base (by others)	18139	183.3	183.3
	5	T5D	2 @ 180 DEGREES	0.950	USA LUM-V-SQ-80PLED-NW-700 & SNTS-204-11-2-180 & 3' concrete base (by others)	36278	366.6	1833
	1	T34	GROUP	0.950	USA LUM-III-80PLED-NW-700-HS & LUM-IV-80PLED-NW-700-HS & SNTS-204-11-2-90 & 3' concrete base (by others)	25692	366.8	366.8
	30	W1	SINGLE	0.950	Trace-Lite TLED111P-42-VS-4K	2154	26.9	807
	6	BL1	SINGLE	0.950	Trace-Lite TLED-B-24	1012	27.46	164.76

Calculation Summary						
Label	Units	Avg	Max	Min	Avg/Min	Max/Min
All Points	Fc	1.15	7.3	0.0	N.A.	N.A.
Property Line	Fc	0.42	2.6	0.0	N.A.	N.A.
East Entry	Fc	1.99	6.6	0.2	9.95	33.00
Golf Carts	Fc	2.16	2.7	1.1	1.96	2.45
Parking Lot	Fc	1.77	7.0	0.1	17.70	70.00
West Entry	Fc	1.73	3.5	0.2	8.65	17.50

NOTES:
-All readings taken at grade
-Buildings included as blocking entities
-This drawing shows suggested fixtures and mounting locations based on the information provided.
-Techlite assumes no responsibility for variation of light levels that result from changes in project parameters not reported at the time of design.

Techlite Corporation
7771 Lantern Court
Fishers, IN 46038
317.578.2626 P
317.578.2727 F
www.techlitecorp.com

TECHLITE
ILLUMINATING SINCE 1987

#	Date	Comments

Revisions

Drawn By: R.J.D.
Checked By: P.M.
Date:9/28/2015
Scale: 1"=30'

Site Lighting Layout

Grand Park Hotel

SOLID STATE AREA LIGHTING

LUM SERIES-PLED

S P E C I F I C A T I O N S

PROJECT NAME:

FIXTURE TYPE: "T3S" & "T5D"

LUM PLED

PATENT PENDING

HOUSING
Heavy cast low copper aluminum assembly (A360 alloy, <0.4% copper). Housing attaches to pole via a one piece, extruded aluminum arm with centering guides for internal draw bolts. Housing/pole junction is gasketed. All exposed hardware is stainless steel. Internal protected hardware is electro-zinc plated.

PLED™ OPTICS
Emitters (LED's) are arrayed on a metal core PCB panel with each emitter located on a copper thermal transfer pad and enclosed by an LED refractor. In asymmetric distributions, a micro-reflector inside the refractor re-directs the house side emitter output towards the street side and functions as a house side shielding element. Refractors are injection molded H12 acrylic. Each LED refractor is sealed to the PCB over an emitter and all refractors are retained by an aluminum frame. Any one Panel, or group of Panels in a luminaire, have the same optical pattern. LED refractors produce standard site/area distributions – Type II, Type III, Type IV, and Type V-SQ, and 3 other specific application distributions - Type II-FR for illumination of the front row of cars in auto dealership illumination, Type V-SQ-N for a concentrated area of coverage with higher footcandle levels, and Type II-ML for back-to-back Type II distributions in a single luminaire intended to illuminate roadways from the median. Panels are field replaceable and field rotatable in 90° increments.

LED DRIVERS
Drivers are UL and cUL recognized mounted on a single plate and factory prewired with quick-disconnect plugs. Constant current driver is electronic and has a power factor of >0.90 and a minimum operating temperature of -40°F. In-line terminal blocks facilitate wiring between the driver and optical arrays. Drivers accept an input of 120-277V, 50/60Hz or 347V-480V, 50,60Hz. (0 - 10V dimmable driver is standard. Driver has a minimum of 3KV internal surge protection. Luminaire supplied with 20KV surge protector for field accessible installation.)

MOUNTINGS
Arm - One piece heavy wall extruded aluminum with internal draw bolt guides. Arm is secured to housing and pole with stainless steel draw bolts.

Wall - Heavy wall extruded aluminum arm with draw bolts integrates with a cast aluminum wall plate and mounting bracket.

FINISH
Electrostatically applied TGIC Polyester Powder Coat on substrate prepared with 20 PSI power wash at 140°F. Four step sand blast and iron phosphate pretreatment for protection and paint adhesion. 400°F bake for maximum hardness and durability. Texture finish is standard.

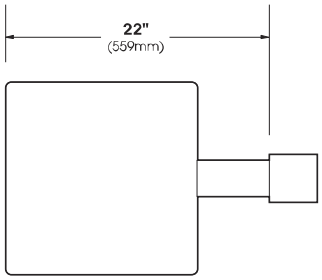

TOP VIEW

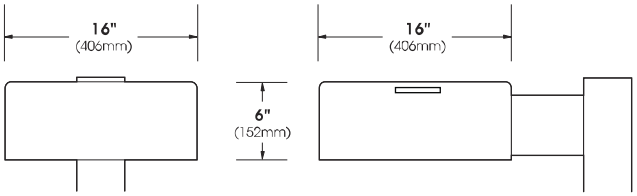

FRONT VIEW

SIDE VIEW

U.L. Listed for wet location

MADE IN THE USA

2015230

U.S. Architectural Lighting

660 West Avenue O, Palmdale, CA 93551
Phone (661) 233-2000 Fax (661) 233-2001
www.usaltg.com

U.S. ARCHITECTURAL LIGHTING

LUM SERIES - PLED

SPECIFICATIONS

POLE DRILLING TEMPLATE

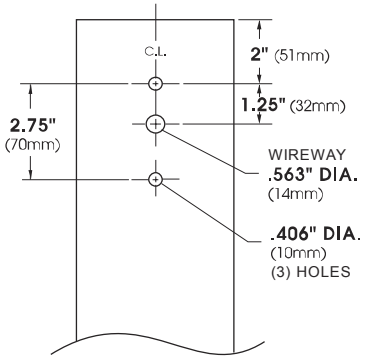

WALL MOUNT

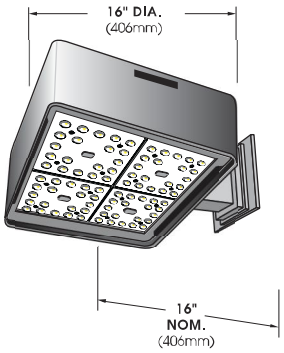

EXTRUDED ALUMINUM ARM AND CAST ALUMINUM WALL BRACKET ASSEMBLY PROVIDED WITH BUILT IN GASKETED WIRE ACCESS FOR FIXTURE/SUPPLY WIRE CONNECTION.

WALL PLATE

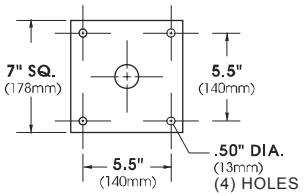

PLED™ MODULES

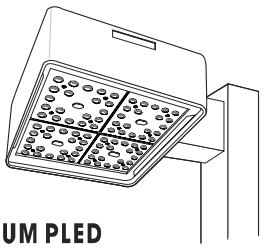

LUM PLED
E.P.A.= 1.12
Available in:
80 &40 LED Array

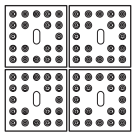

80 LED Array

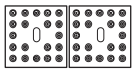

40 LED Array

No. of LEDs	Drive Current	System Watts	HID Equivalent
40	350mA	45	70 - 100
	525mA	66	100 - 150
	700mA	91	175
	1050mA	142	200 - 250
80	350mA	92	150 - 175
	525mA	136	200 - 250
	700mA	184	400

Spec/Order Example: LUM-LED/PLED-V-SQ/80LED-700mA/NW/277/1/RAL9005

SPEC / ORDERING INFORMATION

MODEL	OPTICS	LED			MOUNTING	FINISH	OPTIONS
	PLED™	No. LEDs	DRIVE CURRENT	COLOR TEMP-CCT	ARM MOUNT	STANDARD TEXTURED FINISH	
☐ LUM LED	☐ TYPE II **PLED-II**	☐ **80LED**[1]	☐ **1050mA**	☐ **NW (4000K)*** *STANDARD	☐ **1**	☐ BLACK **RAL-9005-T**	☐ HIGH-LOW DIMMING FOR HARDWIRED SWITCHING OR NONINTEGRATED MOTION SENSOR . . . . . **HLSW**
	☐ TYPE III **PLED-III**	☐ **40LED**	☐ **700mA**	☐ **CW (5000K)**	☐ **2-180**	☐ WHITE **RAL-9003-T**	☐ INTERNAL HOUSE SIDE SHIELD . . . **HS-PLED**
	☐ TYPE IV **PLED-IV**		☐ **525mA**	☐ **WW (3000K)**	☐ **2-90**	☐ GREY **RAL-7004-T**	☐ PHOTO CELL + VOLTAGE (EXAMPLE: PC120V) . . **PC+V**
	☐ TYPE V **PLED-V-SQ**		☐ **350mA**	OTHER LED COLORS AVAILABLE CONSULT FACTORY	☐ **3-90**	☐ DARK BRONZE **RAL-8019-T**	☐ TWIST LOCK PHOTO CELL + VOLTAGE (EXAMPLE: PC120V) . . **TPC+V**
	☐ TYPE II FRONT ROW **PLED-II-FR**				☐ **3-120**	☐ GREEN **RAL-6005-T**	☐ TWIST LOCK RECEPTACLE ONLY . . . **TPR**
	☐ TYPE V NARROW **PLED-VSQ-N**				☐ **4-90**	FOR SMOOTH FINISH REPLACE SUFFIX "T" WITH SUFFIX "S" (EXAMPLE: RAL-9005-S)	☐ SINGLE FUSE (120V, 277V) . . . . . **SF**
	☐ TYPE II MEDIAN ILLUMINATOR **PLED-II-ML**				**ADJUSTABLE KNUCKLE FITTER**		☐ DOUBLE FUSE (208V, 240V, 480V) . . . . **DF**
					☐ **NKLE27**		
					☐ **NKLE23**		
					☐ UNIVERSAL POLE ADAPTOR. . . . . **UPA**		
					WALL MOUNT		
					☐ **WM**	SEE USALTG.COM FOR ADDITIONAL COLORS	

NOTE:
1 - 700mA MAXIMUM

VOLTAGE
☐ **120**
☐ **208**
☐ **240**
☐ **277**
☐ **347**
☐ **480**

660 West Avenue O, Palmdale, CA 93551
Phone (661) 233-2000 Fax (661) 233-2001
www.usaltg.com

LUM SERIES - PLED

LAMP/ELECTRICAL GUIDE

LED COUNT	SOURCE TYPE	SOURCE	INITIAL LUMENS - 4000K	INITIAL LUMENS - 3000K	INITIAL LUMENS - 5000K	L70 GREATER THAN (HR)	STARTING TEMP.	SYSTEM WATTS	VOLTS	MAX INPUT AMPS
40	LED	40 PLED Optical Module - 350mA	5,077 – 5,464	4,445 – 4,784	5,199 – 5,595	60,000+	-20°F	45	120 277	0.38 0.17
40	LED	40 PLED® Optical Module - 525mA	6,977 – 7,507	6,108 – 6,573	7,144 – 7,687	60,000+	-20°F	66	120 277	0.58 0.25
40	LED	40 PLED® Optical Module - 700mA	8,425 – 9,067	7,376 – 7,938	8,627 – 9,285	60,000+	-20°F	91	120 277	0.76 0.33
40	LED	40 PLED® Optical Module - 1050mA	10,956 – 11,792	9,592 – 10,324	11,219 – 12,075	60,000+	-20°F	142	120 277	1.19 0.52
80	LED	80 PLED® Optical Module - 350mA	10,153 – 10,926	8,889 – 9,566	10,397 – 11,188	60,000+	-20°F	92	120 277	0.77 0.34
80	LED	80 PLED® Optical Module - 525mA	13,952 – 15,015	12,215 – 13,146	14,287 – 15,376	60,000+	-20°F	136	120 277	1.14 0.50
80	LED	80 PLED® Optical Module - 700mA	16,851 – 18,139	14,752 – 15,877	17,254 – 18,570	60,000+	-20°F	184	120 277	1.54 0.67

NOTES:

1. Max Input Amps is the highest of starting, operating, or open circuit currents
2. Lumen values for LED Modules vary according to the distribution type
3. System Watts includes the source watts and all driver components.
4. Fuse value should be sufficient to protect all wiring components. For electronic driver and LED component protection, use 10KV – 20KV surge suppressors.
5. L70(9K) – TM-21 6x rule applied

WARNING: All fixtures must be installed in accordance with local codes or the National Electrical Code. Failure to do so may result in serious personal injury.

660 West Avenue O, Palmdale, CA 93551
Phone (661) 233-2000 Fax (661) 233-2001
www.usalfg.com

SNTS 4"

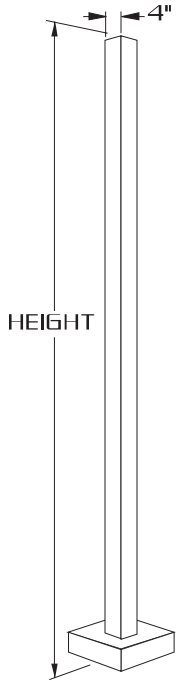

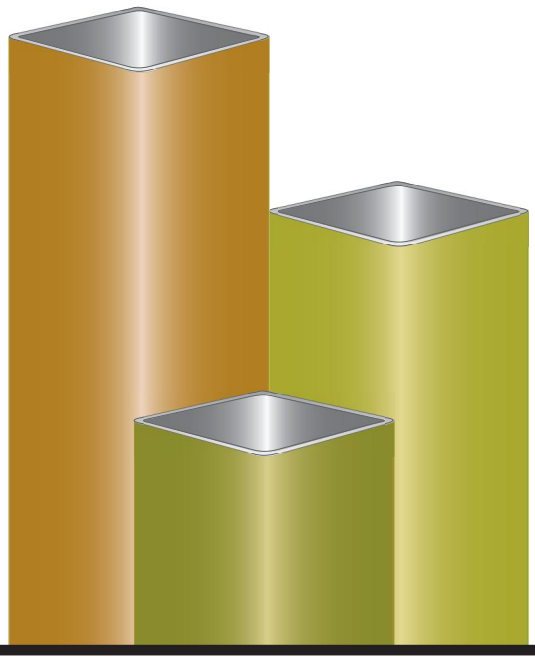

4" SQUARE STRAIGHT STEEL

SPECIFICATIONS

SHAFT: 4" SQUARE. FABRICATED FROM HIGH GRADE STRUCTURAL STEEL TUBE. SHAFT CONFORMS TO ASTM-A-501-68 SPECIFICATIONS. MEETS OR EXCEEDS MINIMUM YIELD STRENGTH OF 46,000 P.S.I. WALL THICKNESS 11 GA. (.120 WALL)OR 7 GA. (.180 WALL) AS SPECIFIED. REINFORCED HAND HOLE IS FURNISHED WITH COVER. SHAFT IS FURNISHED WITH GROUND LUG LOCATED INSIDE POLE ON WALL OPPOSITE HAND HOLE.

BASE PLATE: FABRICATED FROM STRUCTURAL QUALITY HOT ROLLED STEEL. MEETS OR EXCEEDS MINIMUM YIELD STRENGTH OF 36,000 P.S.I. BASE TELESCOPES AND IS CIRCUMFERENTIALLY WELDED TO POLE SHAFT. SLOTTED BOLT HOLES PROVIDE 1" FLEXIBILITY ON EITHER SIDE OF BOLT CIRCLE CENTERLINE.

ANCHORAGE: (4) ANCHOR BOLTS FABRICATED FROM HOT ROLLED STEEL BAR. MINIMUM YIELD STRENGTH OF 50,000 P.S.I. BOLTS HAVE "L" BEND ON ONE END AND ARE THREADED ON THE OTHER END. BOLTS ARE FULLY GALVANIZED AND ARE FURNISHED WITH TWO NUTS AND TWO WASHERS.

BASE COVER: FABRICATED FROM HEAVY GAUGE QUALITY CARBON STEEL. TWO PIECE COVER CONCEALS BASE.

FINISH: POLYESTER POWDER COAT. THE METAL SURFACE IS PRETREATED BY SAND BLAST PROCESS FOR MAXIMUM PAINT ADHESION. ELECTROSTATICALLY APPLIED POLYESTER POWDER TOPCOAT IS BAKED AT 400° TEMPERATURE FOR MAXIMUM HARDNESS AND EXTERIOR DURABILITY.

U.S. ARCHITECTURAL LIGHTING

660 WEST AVENUE O, PALMDALE, CA. 93551
(661) 233-2000
FAX NO. (661) 233-2001
www.usaltg.com

SNTS SERIES

ENGINEERING DATA

Maximum EPA - Square Feet

Catalog Number	Maximum Fixt. wgt.	100 MPH	90 MPH	80 MPH	70 MPH
SNTS 104-11	400	16.7	20.5	26.1	33.4
SNTS 124-11	400	12.2	16.1	20.4	25.8
SNTS 144-11	400	9.9	12.8	16.1	20.2
SNTS 154-11	400	8.9	11.4	14.4	17.9
SNTS 164-11	400	7.9	10.1	12.8	15.9
SNTS 184-11	400	6.2	8.2	10.1	13.8
SNTS 204-11	400	4.8	6.2	7.9	11.6
SNTS 204-7	450	8.8	11.3	14.0	17.4
SNTS 254-11	350	1.6	3.2	5.5	8.8
SNTS 254-7	450	4.3	6.1	9.1	11.2

All above design calculations are based on sustained wind forces plus additional 1.3 wind gust
(Example: Pole rated at 80 MPH withstands 104 MPH gusts)

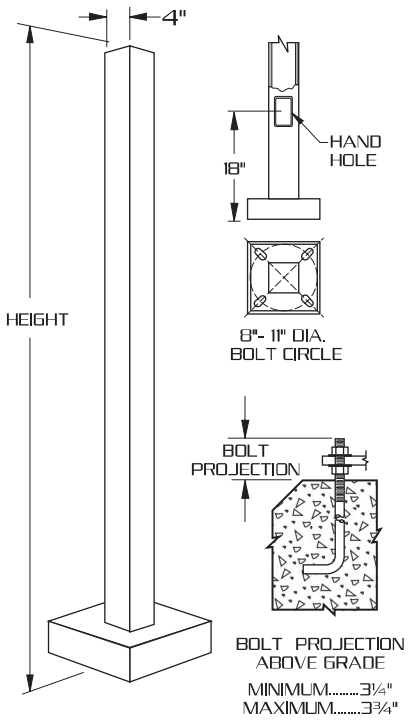

ORDERING INFORMATION

MODEL NO. : SNTS	POLES	MOUNTING	FINISH	OPTIONS

MODEL NO. : SNTS

POLES

	POLE HEIGHT	WALL THICKNESS	BOLT CIRCLE	ANCHORAGE
☐ 104-11	10'	11	9"	3/4"X18"X3"
☐ 124-11	12'	11	9"	3/4"X18"X3"
☐ 144-11	14'	11	9"	3/4"X18"X3"
☐ 154-11	15'	11	9"	3/4"X18"X3"
☐ 164-11	16'	11	9"	3/4"X18"X3"
☐ 184-11	18'	11	9"	3/4"X18"X3"
☐ 204-11	20'	11	10"	3/4"X24"X3"
☐ 204-7	20'	7	11"	3/4"X30"X3"
☐ 254-11	25'	11	11"	3/4"X24"X3"
☐ 254-7	25'	7	11"	3/4"X30"X3"

MOUNTING

☐ 2 3/8"X4" TENON **PT23**

☐ 2 7/8"X4" TENON **PT27**

☐ OTHER TENON MT _____

DRILL MOUNT

☐ 1.....

☐ 3-90....

☐ 2-180..

☐ 4-90....

☐ 2-90.....

☐ 3-120...

3-120 REQUIRES **PT27** AND **T3120** ADAPTER

FINISH

STANDARD TEXTURED FINISH

☐ BLACK **RAL-9005-T**

☐ WHITE **RAL-9003-T**

☐ GREY **RAL-7004-T**

☐ DRK BRONZE **RAL-8019-T**

☐ GREEN **RAL-6005-T**

OPTION:

☐ PRIME PAINT **PP**

☐ GALVANIZED **GLV**

☐ THERMOSET POLYESTER POWDER **PDR**

FOR SMOOTH FINISH REMOVE SUFFIX "T" (EXAMPLE: RAL-9500)

SEE WEBSITE FOR ADDITIONAL COLORS

OPTIONS

☐ DUPLEX RECEPTACLE **DUP**

☐ GFI RECEPTACLE **GFI**

☐ 3 WAY ADAPTER **T3120**

☐ 1/2" COUPLING **CPLN1/2**

☐ 3/4" COUPLING **CPLN3/4**

☐ 2" COUPLING **CPLN2**

(SPECIFY COUPLING LOCATION)

SEE ACCESSORIES SECTION FOR OTHER OPTIONS.

U.S. ARCHITECTURAL LIGHTING
660 WEST AVENUE O, PALMDALE, CA. 93551
(661) 233-2000
FAX NO. (661) 233-2001
www.usaltg.com

TLED111P

3rd Generation Architectural LED Wallpack

Model: _____ Date: _____

Accessories: _____

Job Name: _____ Type: "W1"

DESCRIPTION

TRACE*LITE's third generation TLED111P series LED wallpack features an updated SSL light engine that provides 0-10V dimming, as well as improvements in efficacy, lumen output, and thermal management while still maintaining the consistency of our proven decorative half-moon housing. The TLED111P housing is constructed of die-cast aluminum with a UV resistant, thermoset polyester powder coated finish that provides durable protection from environmental conditions, corrosion and the the elements. It is UL Listed for Wet Locations. The TLED111P is included on the DesignLights Consortium™ Qualified Product List, meeting or exceeding the efficacy requirements for various rebate programs across the country. The SSL light engine's LEDs are protected by a high-impact, tempered glass lens.

SPECIFICATIONS

Construction:

The TLED111P series has a precision designed aluminum housing with stainless steel hardware, tempered glass lens, silicone gaskets and a UV resistant, thermoset polyester powder coated finish. The interior wiring space is easily accessible through the frame/lens assembly at the bottom of the luminaire and offers durable performance with clean, architectural aesthetics. The TLED111P is completely sealed with silicone gaskets and is UL Listed for Wet Locations.

Optics:

The TLED111P series wallpack delivers exceptional light quality with available correlated color temperature options of 3000K, 4000K or 5000K, a CRI of ≥85 and a projected color shift of less than 1%. The TLED111P LED light engine is specifically designed to distribute light forward and to the sides providing the ideal wallpack distribution that puts light where it is needed in the most efficient way possible. Producing up to 4873 delivered lumens, the TLED111P has an L70 of 50,000 hours.

Electrical:

The TLED111P includes 0-10V dimming as a standard option with LEDs powered by constant current, high efficiency Class 2 LED driver with active power factor correction (0.90 typical), an IP66 rating, all around protection against over-voltage, over-temperature, short circuit conditions, and lightning. The TLED111P driver has a standard voltage sensing input of 120 ~ 277VAC 50/60Hz, a Class A EMI rating, complies with UL8750 safety regulations and with ANSI/IEEE C62.41 Class A operation. The TLED111P is suitable for operation in -31°F to 104°F (-35°C to 40°C) ambient conditions.

Thermal Management:

The LED light engine is mounted directly to a dedicated, custom designed LEDLITE/*logic* thermal heat sink. The configuration of the heat sink is unique and has been sized to maximize the thermal dissipation of the traditional wallpack housing. This configuration optimizes the heat removal for the LEDs, which in turn, makes possible the high efficacy, lumen output and longevity of the TLED111P.

Environmentally Friendly Design:

TLED111P luminaires consume very little energy and provide long life in comparison to traditional lamp technologies. The TLED111P-90-VS consumes only 56 watts, however the light output can conservatively be compared to 250W HID luminaire of similar design. The TLED111P provides a significant reduction in KW load and carbon emissions.

Installation:

The TLED111P series wallpack features the EZ-LITE gasketed steel quick mount plate with a built in bubble level that can be mounted to any vertical surface, and allows the TLED111P to be easily wired to a recessed J-box. Optional tamper-resistant hardware is available for applications where there is a high rate of vandalism or theft, or in high traffic public spaces.

Battery Back-Up (Option: BB):

TRACE*LITE's battery back-up option provides approximately 1400 lumens for 90 minutes in the event of a primary power failure. The battery back-up option includes a battery pack along with a charging/transfer device that keeps the battery pack charged during normal AC operation and transfers battery power to a portion of the LED modules when the device senses that the primary AC power has failed. Suitable for operation in 32°F to 104°F (0°C to 40°C) ambient conditions.

Transient Protection System (Option: TP):

The LEDLITE/*logic* optional transient protection device is designed to be used in conjunction with our LED drivers. The "-TP" option utilizes a 3-leaded device that protects Line-Ground, Line-Neutral, and Neutral-Ground in accordance with IEEE/ANSI C62.41.2 guidelines. The surge current rating of the "-TP" option is 10,000 amps.

Photocontrol (Accessory: PC):

Optional field installed photocontrol provides dusk-till-dawn security. Input voltage must be specified to match fixture input voltage.

Specs at a Glance					
	42 LED	54 LED	66 LED	72 LED	90 LED
Wattage (Nominal)	27W	34W	43W	46W	56W
Ingress Protection	UL Listed for Wet Locations				
Lumens (5000K)	2155	2771	3386	3694	4873
Efficacy (5000K)	80	80	79	81	87
CCT	3000K, 4000K, 5000K				
Input Voltage	120~277 Voltage Sensing				
Optics	Type II Very Short				
CRI	≥85				
Warranty	5 Years				
Ambient Temp	-31°F to 104°F (-35°C to 40°C)				

Testing & Compliance:

The reliability and performance of the TLED111P is evaluated in accordance with the parameters outlined and reported by LM-79 and LM-80 documents. Photometric data is tested to IESNA LM-79-08 standard by an independent testing laboratory. Lumen maintenance, or L70, a measure of long term reliability, is determined for the light source, which consists of the LED and PSB sub-assembly as installed in the luminaire, using LM-80 in-situ thermal and reliability data as provided by the LED manufacturer in accordance with DOE/EPA standards.

Listing:

The TLED111P is UL certified under UL1598 and UL 8750 specifications and is UL Listed for Wet Locations.

Warranty:

Any component that fails due to manufacturer's defect is guaranteed for 5 years. The warranty does not cover physical damage, abuse or acts of God. Manufacturer reserves the right to charge for such repairs if deemed necessary.

Fixture Performance

Part Number	Total System Watts	L70 Hours @ 25°C	3000K CCT		4000K CCT		5000K CCT	
			Lumens (lm)	Efficacy (LPW)	Lumens (lm)	Efficacy (LPW)	Lumens (lm)	Efficacy (LPW)
TLED111P-42-VS	27W	50,000	2222	80	2189	80	2155	80
TLED111P-54-VS	34W	50,000	2857	83	2814	82	2771	81
TLED111P-66-VS	43W	50,000	3492	82	3439	80	3386	80
TLED111P-72-VS	46W	50,000	3809	83	3752	82	3694	81
TLED111P-90-VS	56W	50,000	4761	85	4690	83	4873	87

NOTE: Lumen maintenance and life (part of LM-80 data) are per published information from primary LED suppliers and is based on design operation at their specified thermal management and electrical design parameters.

Dimensions

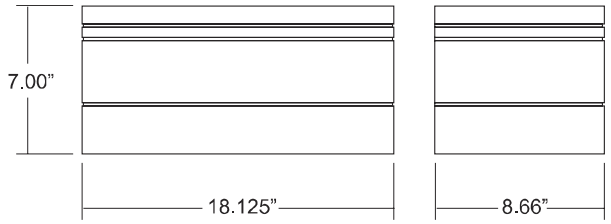

Approximate Weight: 22 lbs.

Sample Photometrics

TLED111P-90-VS-5K
IES: TYPE II VERY SHORT
MOUNTING HEIGHT: **10 FEET**
TILT: ZERO
HORIZONTAL SPACING CRITERIA: 1.28

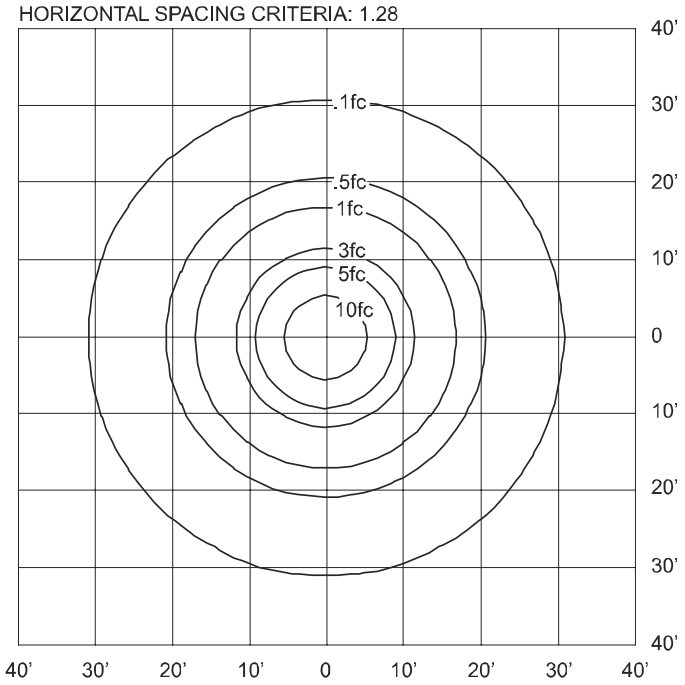

Ordering Information

Example: TLED111P-42-VS-5K-TRH

Series	Number of LEDs	Input Voltage	CCT	**Options** (Factory Installed)
TLED111P	42 = 42 LEDS (27 Watts)	VS= 120~277VAC Voltage Sensing	3K = 3000K	BB = Battery Backup
	54 = 54 LEDS (34 Watts)		4K = 4000K	SZ**XXX**[1] = Single Line Side Fuse (Specify 120 or 277V)
	66 = 66 LEDS (43 Watts)		5K = 5000K	TP = Transient Protection System
	72 = 72 LEDS (46 Watts)			TRH = Tamper Resistant Hardware
	90 = 90 LEDS (56 Watts)			CC[2] = Custom Color

Notes	**Accessories**[3] (Field Installed)
[1] Specify voltage	PC1 = 120VAC Photocontrol
[2] Consult factory for specific part number and details	PC2 = 277VAC Photocontrol
[3] Order as separate line item	RLF111 = Replacement Frosted Glass Lens

Specifications are subject to change without notice.
Installation must be performed in accordance with
Barron Lighting Group installation instructions.

BARRON lighting group
800.533.3948 • www.barronltg.com

TLED-B

Dome Top LED Bollard

Model: _____ Date: _____

Accessories: _____

Job Name: _____ Type: BL1

LEDLITE*logic*

DESCRIPTION

The TLED-B series bollard's traditional design combined with a high performance LED light source and superior thermal management makes it an attractive, energy saving choice. Every aspect of the TLED-B series design has been engineered to provide an LED bollard that delivers optimum optical performance and longevity in an attractive, durable housing. The TLED-B housing uses a UV resistant powder coated finish to protect against the elements. Available 24 LED light engine with 27.5 total system watts delivers over 1000 initial lumens. The TLED-B bollard provides a wide spectrum of application options for lighting pedestrian walkways, retail entryways, as well as lighting sidewalks in schools, office buildings, and apartment complexes.

SPECIFICATIONS

Construction:

An extruded aluminum body features clean architectural lines with ample, integral mounting space for many optional accessories. The TLED-B's most important construction feature is its integrated thermal management, which allows for optimum performance and durability of the LED light engine without sacrificing design aesthetics. The TLED-B is completely sealed and gasketed and has tamper resistant hardware, making it a perfect choice for high traffic, vandal prone locations. TLED-B also incorporates a UV resistant, long lasting, polyester based powder coated finish.

Optics:

Our TLED-B series delivers exceptional light quality, efficiency and light distribution with an optical design that provides even light distribution. The TLED-B's textured silver, internal reflector is specifically designed to diffuse and distribute light where it is needed in the most efficient way possible.

Electrical:

The 24 LED SSL light engine in the TLED-B draws 27.5 watts total, including the driver. The TLED-B is powered by constant voltage control driver and provides a 100,000 hour rated life with 70% lumen maintenance, a 4700K CCT, and a CRI of ≥75. All drivers are Class 2 power supplies with input voltage range of 120VAC to 277VAC, providing a Class A EMI rating and a high power factor of ≥0.90. The TLED-B is suitable for operation in -40°F to 104°F (-40°C to 40°C) ambient conditions.

Thermal Management:

LEDLITE*logic* heat sinking technology moves heat away from the LEDs by utilizing a patent-pending "chimney" design that takes advantage of thermal convection dynamics maximizing system performance and delivering a 100,000 hour life with 70% lumen maintenance.

Environmentally Friendly Design:

TLED-B luminaires consume very little energy and provide long life in comparison to traditional lamp technologies. The TLED-B is RoHS (Restriction of Hazardous Substances) compliant and provides a significant reduction in KW load and carbon emissions.

Installation:

The TLED-B series features a sturdy base plate that is anchored with three J-bolts. The bollard body easily attaches to the base plate by three (3) tamper-resistant fasteners and the bollard top is attached to the body using three (3) more tamper-resistant fasteners.

Transient Protection System (Option: TP):

The LEDLITE*logic* optional transient protection device is designed to be used in conjunction with our LED drivers. The "-TP" option utilizes a 3-leaded device that protects Line-Ground, Line-Neutral, and Neutral-Ground in accordance with IEEE/ANSI C62.41.2 guidelines. The surge current rating of the "-TP" option is 10,000 amps.

Testing & Compliance:

The reliability and performance of the TLED-B is evaluated in accordance with the parameters outlined and reported by LM-79 and LM-80 documents. Photometric data is tested to IESNA LM-79-08 standard by an independent testing laboratory. Lumen maintenance, or L70, a measure of long term reliability, is determined for the light source, which consists of the LED and PSB sub-assembly as installed in the luminaire, using LM-80 in-situ thermal and reliability data as provided by the LED manufacturer in accordance with DOE/EPA standards.

Warranty:

Any component that fails due to manufacturer's defect is guaranteed for 5 years. The warranty does not cover physical damage, abuse or acts of God. Manufacturer reserves the right to charge for such repairs if deemed necessary.

Specs at a Glance	
Wattage (Nominal)	27.5W
Ingress Protection	Suitable for Wet Locations
Lumens	1012
Efficacy	37
CCT	4700K
Input Voltage	120/277VAC
Optics	Type V Short Non Cut-Off
CRI	≥75
Warranty	5 Years
Ambient Temp	-40°F to 104°F (-40°C to 40°C)

Fixture Performance

Part Number	Initial Lumens	Lumens per Watt (LPW)	Total Watts	L70 Hours @ 25°C	BUG Ratings
TLED-B-24-DT	1012	37	27.5	100,000	B1-U2-G1

NOTE: Lumen maintenance and life (part of LM-80 data) are per published information from primary LED suppliers and is based on design operation at their specified thermal management and electrical design parameters.

Sample Photometrics

TLED-B-24 (Type V Short Non-Cutoff)

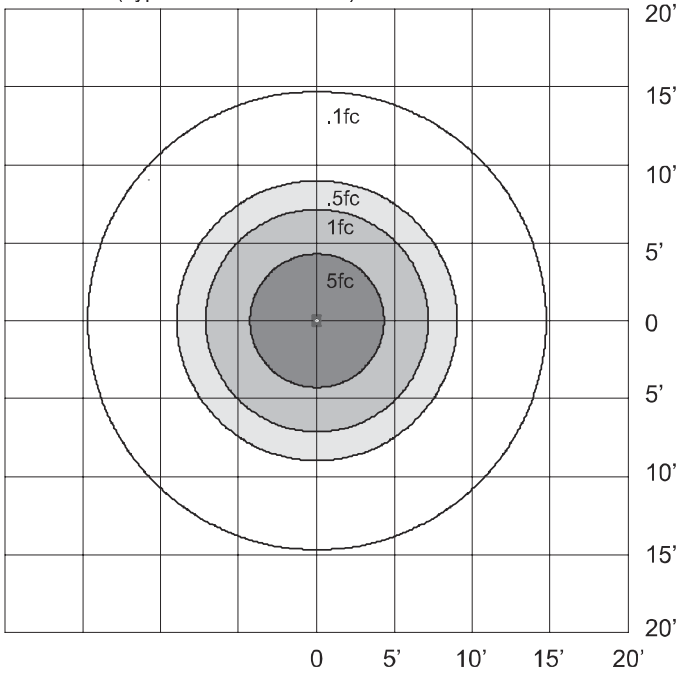

Dimensions

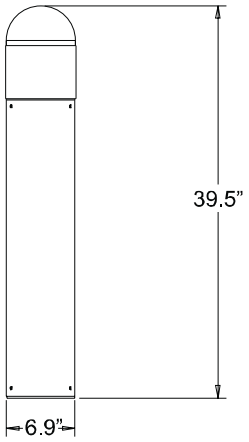

Mounting Template

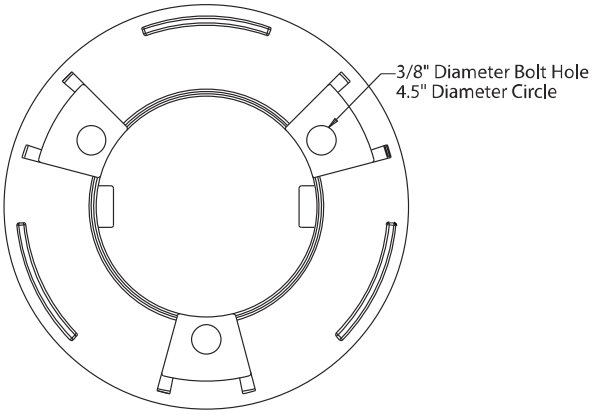

Ordering Information

Example: TLED-B-24-DT-SLV-TP

Series	# of LEDs	Input Voltage	Finish	**Options** (Factory Installed)
TLED-B	24 = 24 LEDs	DT = 120/277VAC	BL = Black	SZ**XXX**[1] = Single Line Side Fuse (Specify 120 or 277V)
			SLV = Silver	TP = Transient Protection System
Notes				CC[2] = Custom Color

[1] Specify voltage

[2] Consult factory for specific part number and details

Specifications are subject to change without notice.
Installation must be performed in accordance with
Barron Lighting Group installation instructions.

BARRON lighting group
800.533.3948 • www.barronltg.com