TOWN OF WESTFIELD
Stormwater Technical Standards Manual

APPENDIX 1

TOWN OF WESTFIELD
STORMWATER TECHNICAL STANDARD DETAILS

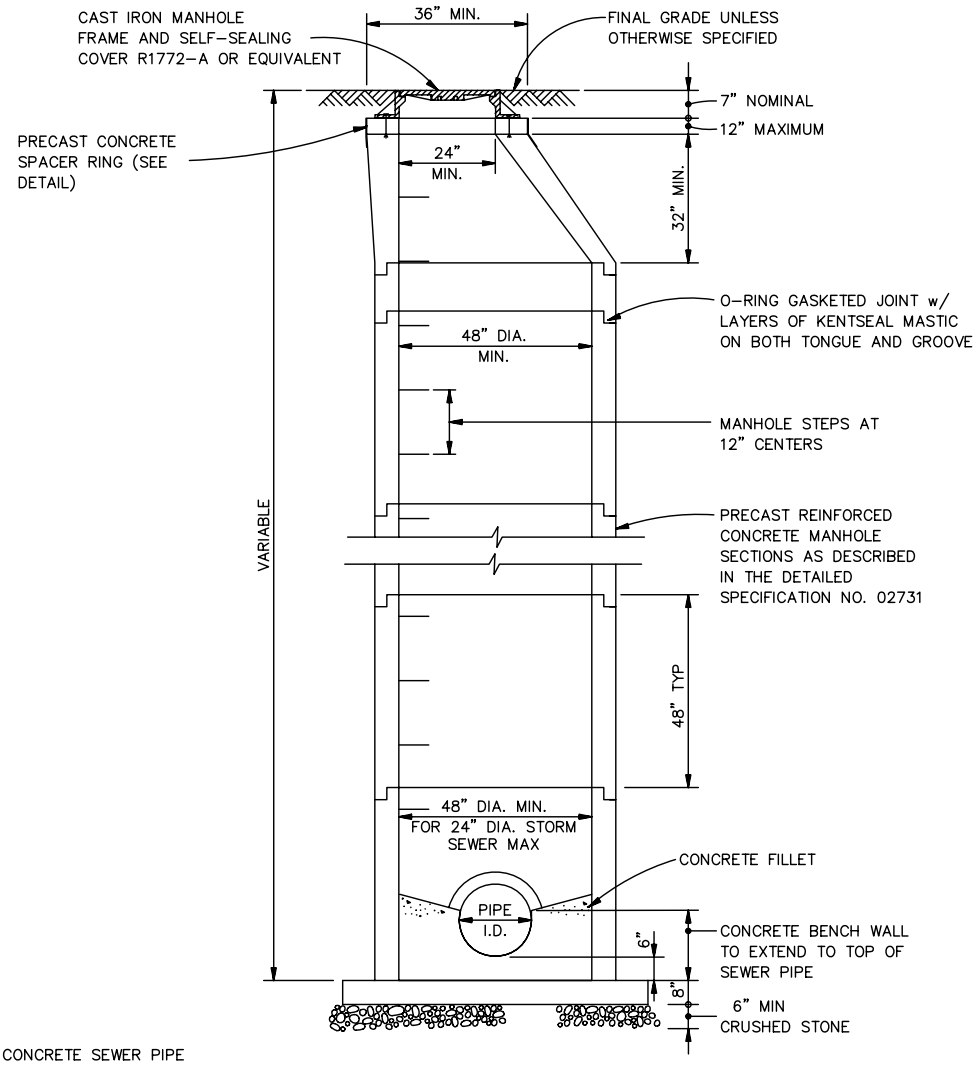

*NOTE:

1. GROUT CONCRETE SEWER PIPE WATERTIGHT TO MANHOLE WALL
2. INSTALL BUTYL RUBBER WATERSTOP FOR PIPE OTHER THAN CONCRETE SEWER PIPE
3. SEE TYPE 1 STORM SEWER MANHOLE DETAIL FOR SEWERS LARGER THAN 24"

STANDARD STORM MANHOLE DETAIL

Westfield PUBLIC WORKS Parks • Utilities • Streets

RENEE LYNN GOFF REGISTERED No. 10403860 STATE OF INDIANA PROFESSIONAL ENGINEER

TOWN OF WESTFIELD, INDIANA

Renée Lynn Goff 4/10/06
DATE

FIGURE ST-1

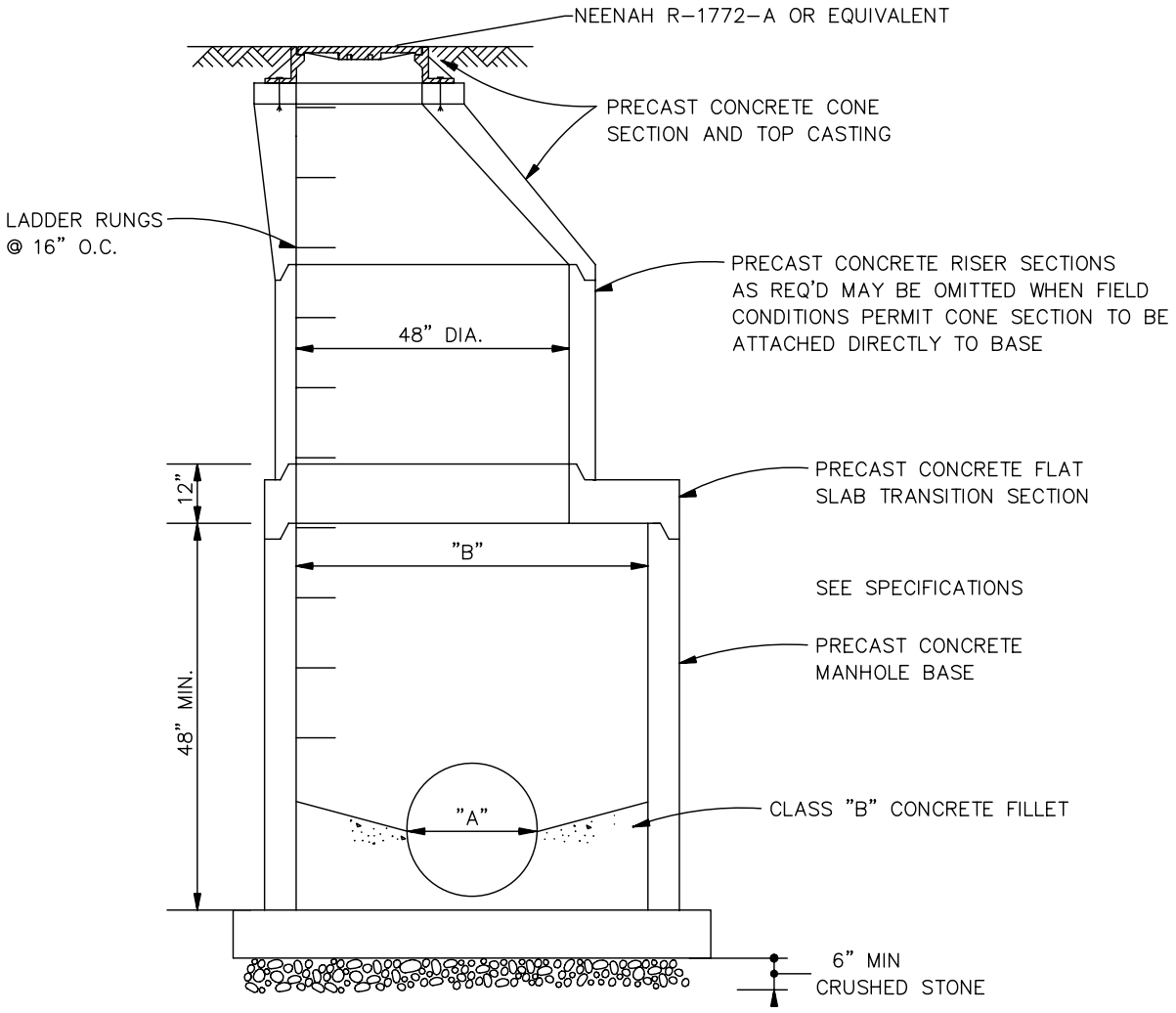

TYPE I MANHOLE STRUCTURE DATA		
PIPE DIA. "A"	INTERSECTING ANGLE	PIPE DIA. "B"
30"	0° TO 44°	30"
30"	44° TO 90°	30"
36"	0° TO 44°	36"
36"	44° TO 90°	36"

NOTES:

1. SEE STANDARD STORM SEWER MANHOLE DETAIL FOR OTHER DETAIL & DIMENSIONS
2. RISER & CONE SECTIONS SHALL BE AS SHOWN ON STANDARD STORM SEWER MANHOLE DETAIL

TYPE 1 STORM SEWER MANHOLE DETAIL

Westfield PUBLIC WORKS Parks • Utilities • Streets

RENEE LYNN GOFF REGISTERED No. 10403860 STATE OF INDIANA PROFESSIONAL ENGINEER

TOWN OF WESTFIELD, INDIANA

Renée Lynn Goff 4/10/06
DATE

FIGURE ST-2

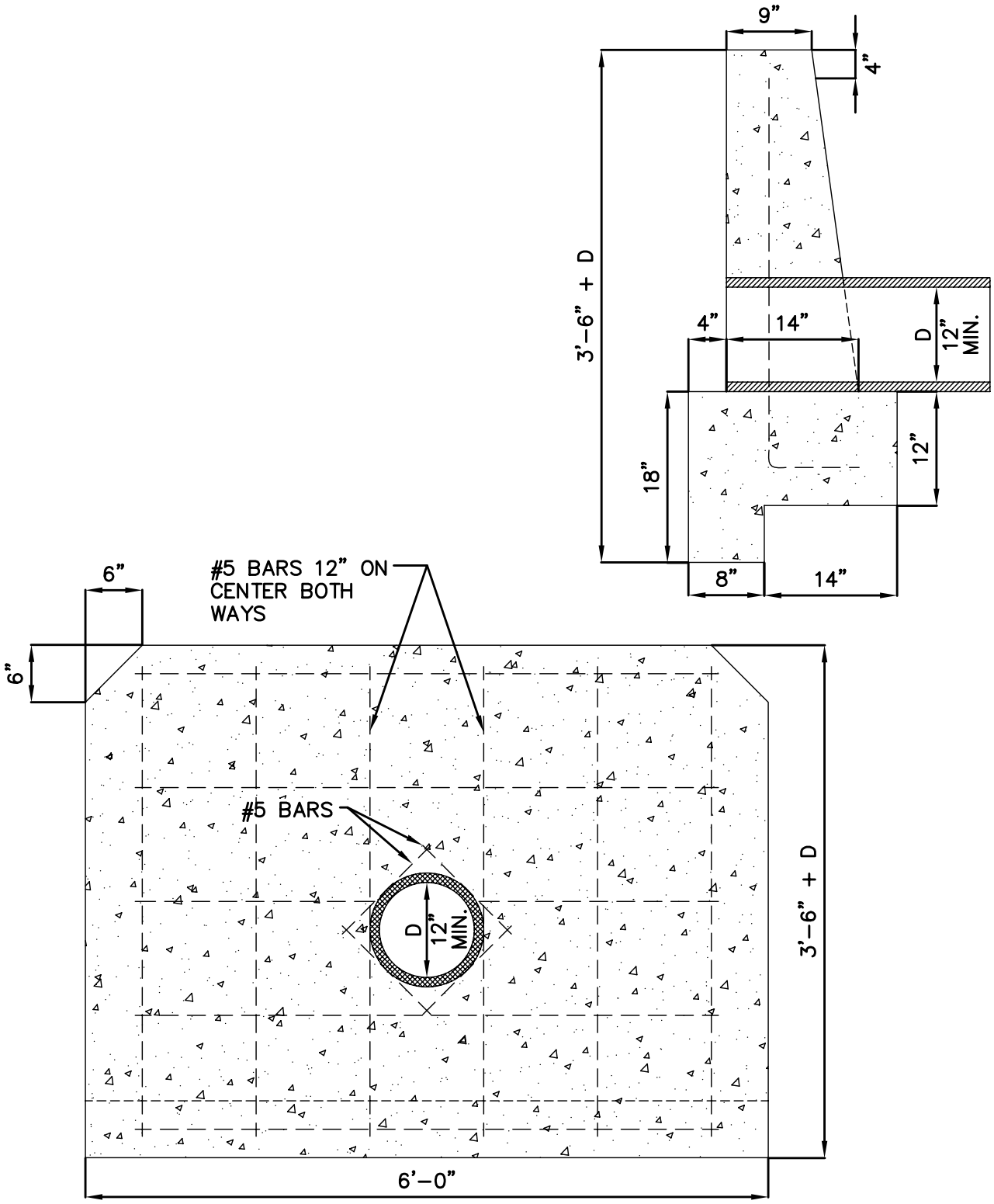

STRAIGHT HEADWALL

Westfield PUBLIC WORKS Parks • Utilities • Streets

RENEE LYNN GOFF REGISTERED No. 10403860 STATE OF INDIANA PROFESSIONAL ENGINEER

TOWN OF WESTFIELD, INDIANA

Renée Lynn Goff 4/10/06
DATE

FIGURE ST-3

RODNEY HUNT SERIES FV-AC FLAP GATE REQUIRED, OR APPROVED EQUAL.

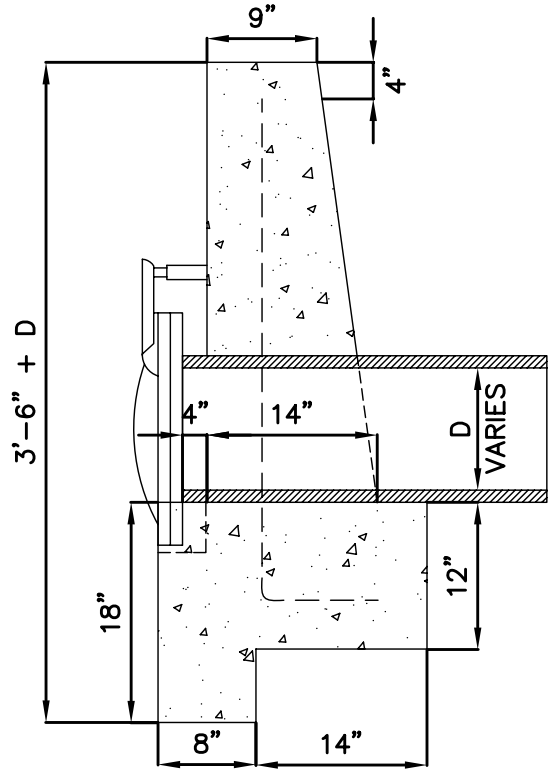

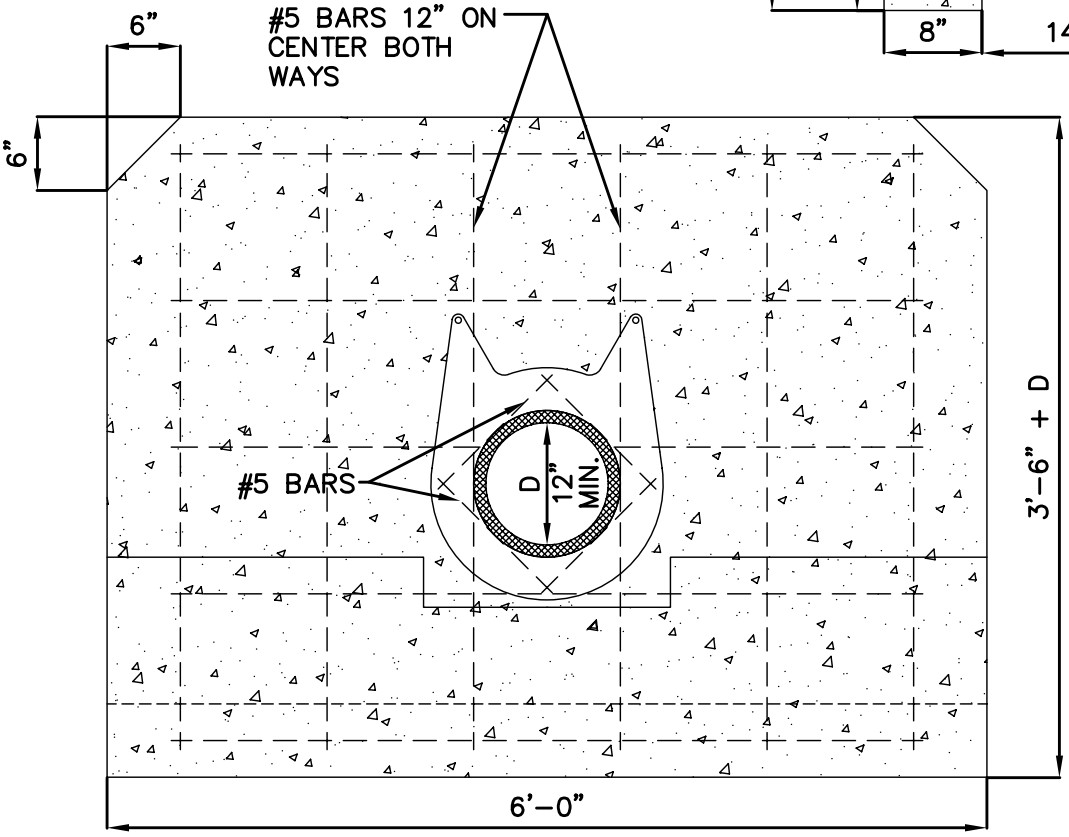

STRAIGHT HEADWALL WITH FLAP GATE

Westfield PUBLIC WORKS Parks • Utilities • Streets

RENEE LYNN GOFF REGISTERED No. 10403860 STATE OF INDIANA PROFESSIONAL ENGINEER

TOWN OF WESTFIELD, INDIANA

Renée Lynn Goff 4/10/06
DATE

FIGURE ST-4

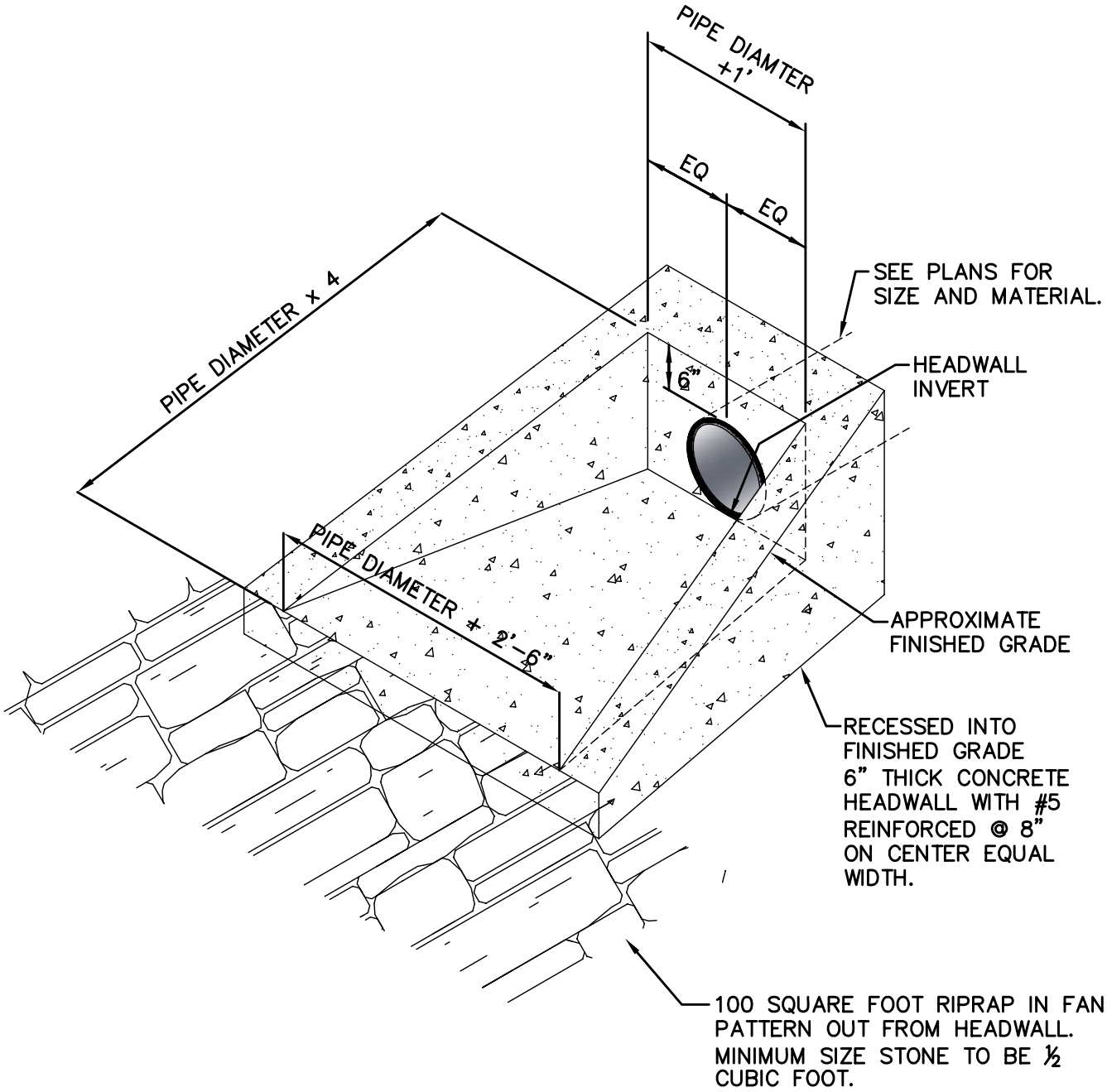

ISOMETRIC @ HEADWALL TYPE "I"

Westfield PUBLIC WORKS Parks • Utilities • Streets

RENEE LYNN GOFF REGISTERED No. 10403860 STATE OF INDIANA PROFESSIONAL ENGINEER

TOWN OF WESTFIELD, INDIANA

Renée Lynn Goff 4/10/06
DATE

FIGURE ST-5

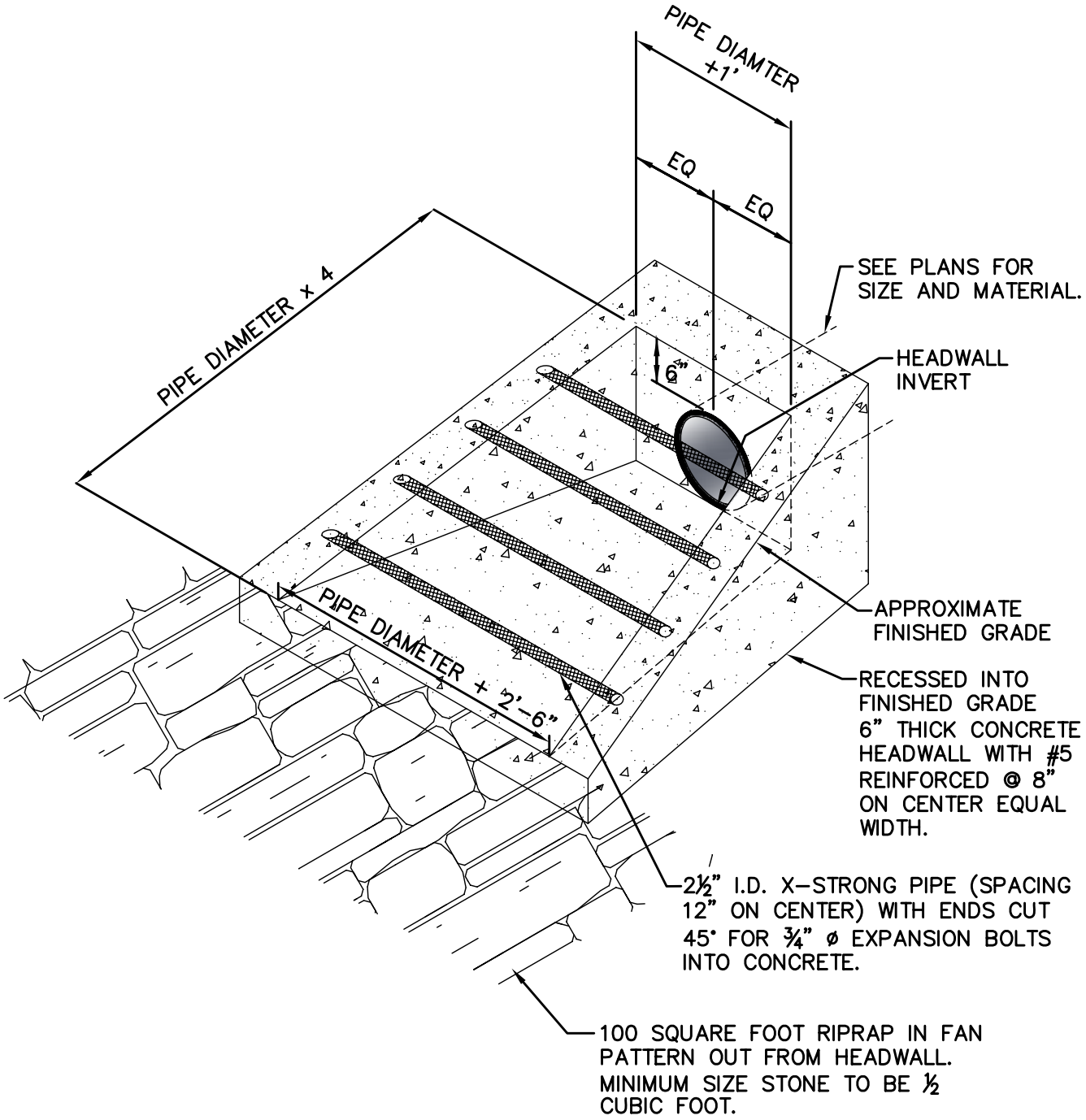

NOTE: HEADWALL SIMILAR TO TYPE "I" EXCEPT FOR PIPE GUARDS

ISOMETRIC @ HEADWALL TYPE "II"

Westfield PUBLIC WORKS Parks • Utilities • Streets

RENEE LYNN GOFF REGISTERED No. 10403860 STATE OF INDIANA PROFESSIONAL ENGINEER

TOWN OF WESTFIELD, INDIANA

Renée Lynn Goff 4/10/06
DATE

FIGURE ST-6

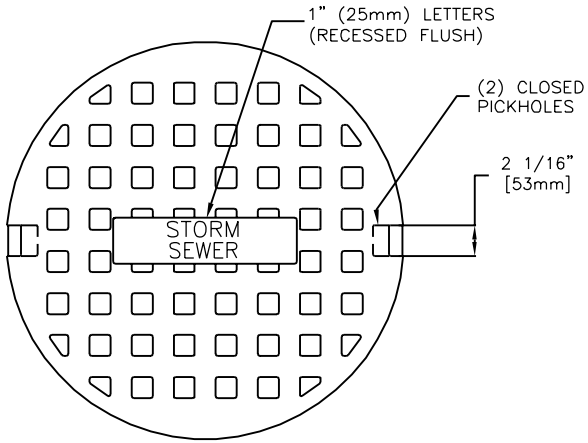

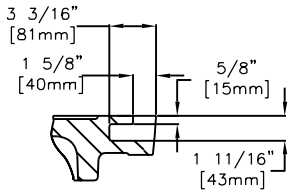

PICKHOLE DETAIL

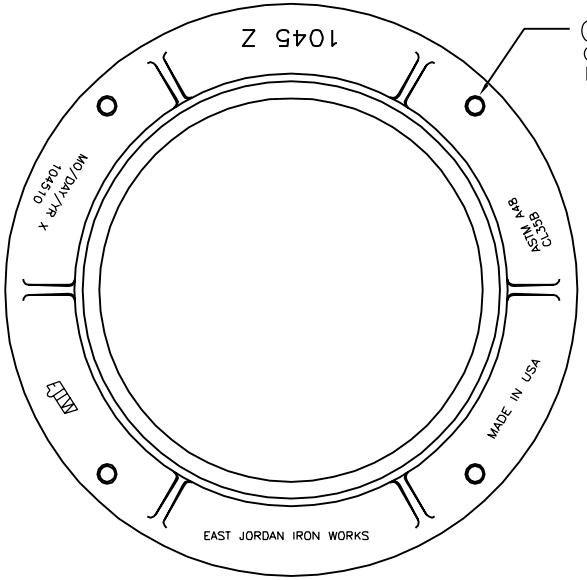

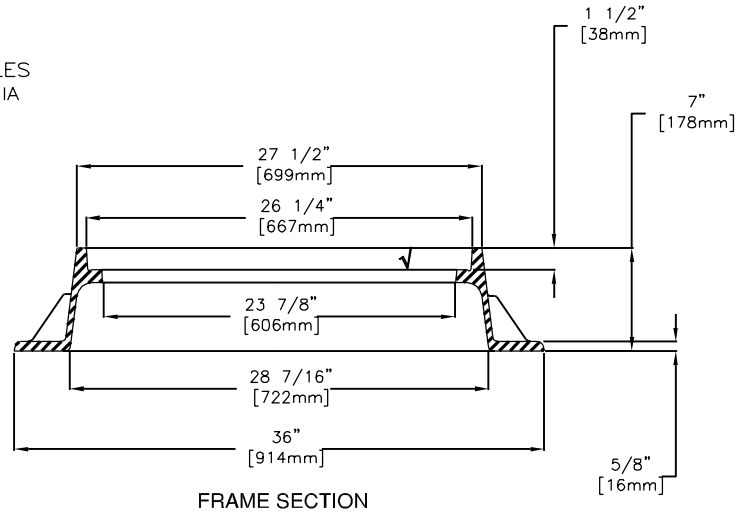

FRAME SECTION

NEENAH	R-1642
EAST JORDAN	1045Z

MANHOLE SOLID LID CASTING

Westfield PUBLIC WORKS Parks • Utilities • Streets

RENEE LYNN GOFF REGISTERED No. 10403860 STATE OF INDIANA PROFESSIONAL ENGINEER

TOWN OF WESTFIELD, INDIANA

Renée Lynn Goff 2/23/07
DATE

FIGURE ST-7

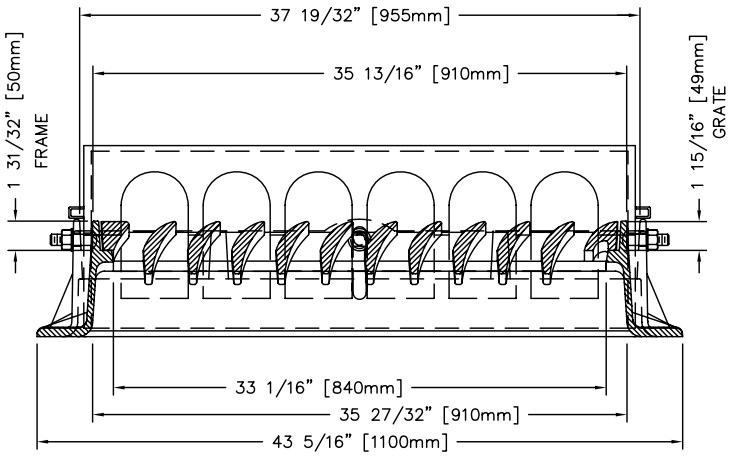

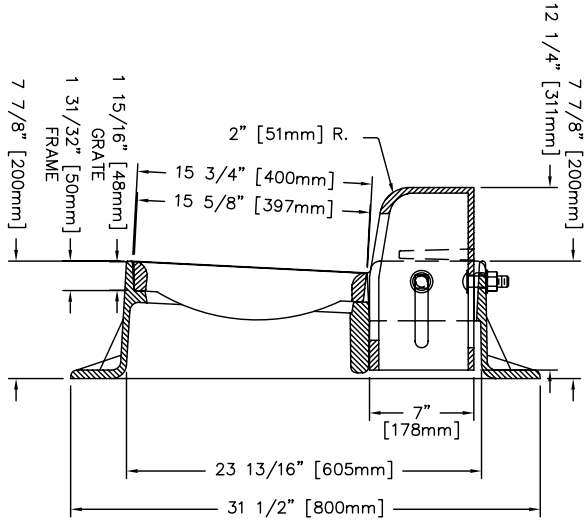

NEENAH	R-3287-10V
EAST JORDAN	7505 M1 & T2

* OR APROVED BY WESTFIELD PUBLIC WORKS DEPARTMENT

** STORM SEWER CASTINGS MANHOLE COVERS, BEEHIVE INLETS, CURB INLETS OR OTHER APPROVED CASTING SHALL HAVE THE FOLLOWING PHRASES CAST IN RECESSED LETTERS TWO (2) INCHES IN HEIGHT:

A. "STORM SEWER"
B. "DRAINS TO RIVER" OR "DRAINS TO WATERWAY"
C. "DUMP NO WASTE"
D. OTHER PHRASES SHALL REQUIRE APPROVAL OF THE WESTFIELD PUBLIC WORKS DEPARTMENT.

CHAIR BACK CURB INLET CASTING

Westfield PUBLIC WORKS Parks • Utilities • Streets

RENEE LYNN GOFF REGISTERED No. 10403860 STATE OF INDIANA PROFESSIONAL ENGINEER

TOWN OF WESTFIELD, INDIANA

Renée Lynn Goff 4/10/06
DATE

FIGURE ST-8

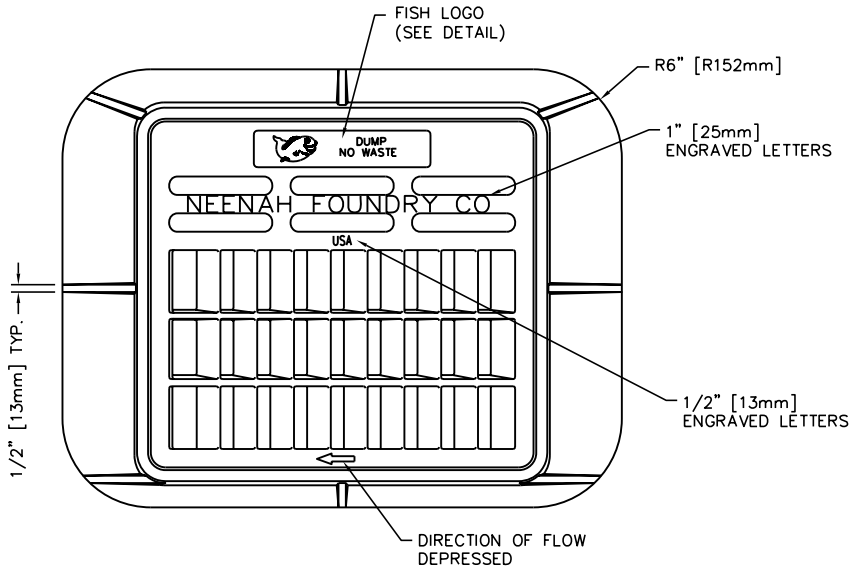

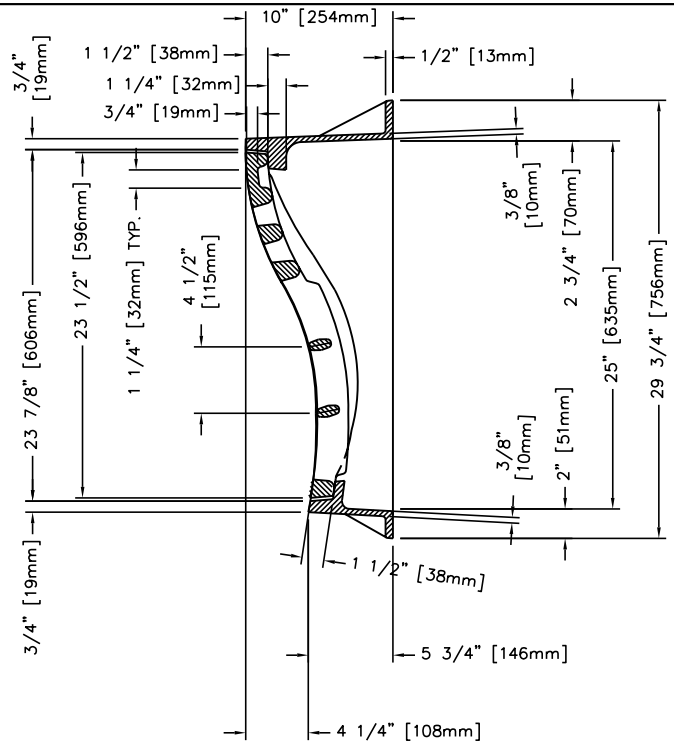

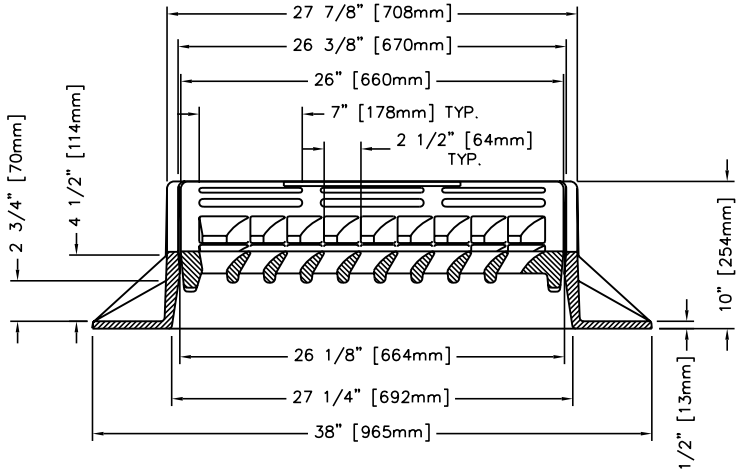

NOTE: ALL DIMENSIONS SHOWN ARE IN ENGLISH AND [METRIC]
MEETS AASHTO M-306 PROOF LOAD REQUIREMENTS.
COMPONENT NOS: FRAME 3501-2176; GRATE 3501-3001
MATERIAL: CAST GRAY IRON ASTM A-48, CLASS 35B
FINISH: NO PAINT
WEIGHT: FRAME 211#; GRATE 156#

NEENAH	3501-TL OR TR
EAST JORDAN	7495-M2 OR M1

** STORM SEWER CASTINGS MANHOLE COVERS, BEEHIVE INLETS, CURB INLETS OR OTHER APPROVED CASTING SHALL HAVE THE FOLLOWING PHRASES CAST IN RECESSED LETTERS:

A. "STORM SEWER"
B. "DRAINS TO RIVER" OR "DRAINS TO WATERWAY"
C. "DUMP NO WASTE"
D. OTHER PHRASES SHALL REQUIRE APPROVAL OF THE WESTFIELD PUBLIC WORKS DEPARTMENT.

ROLLED CURB INLET CASTING

Westfield PUBLIC WORKS Parks • Utilities • Streets

RENEE LYNN GOFF REGISTERED No. 10403860 STATE OF INDIANA PROFESSIONAL ENGINEER

TOWN OF WESTFIELD, INDIANA

Renée Lynn Goff 4/10/06
DATE

FIGURE ST-9

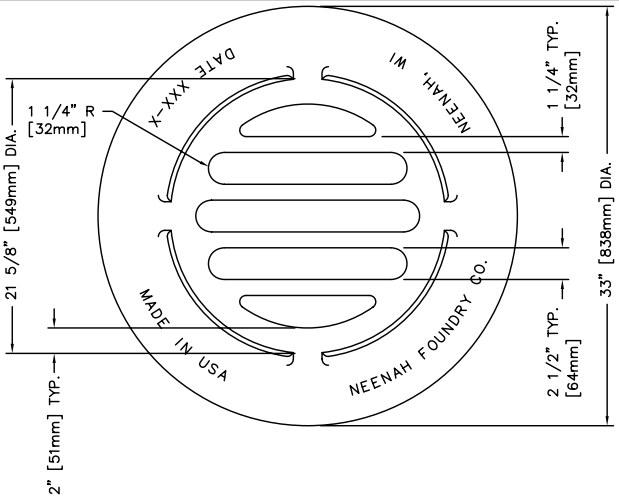

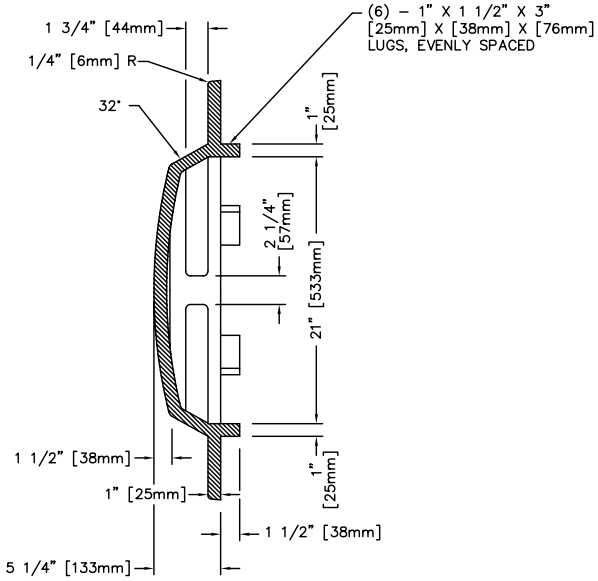

NEENAH	R–4342
EAST JORDAN	6489

* OR APROVED BY WESTFIELD PUBLIC WORKS DEPARTMENT

** STORM SEWER CASTINGS MANHOLE COVERS, BEEHIVE INLETS, CURB INLETS OR OTHER APPROVED CASTING SHALL HAVE THE FOLLOWING PHRASES CAST IN RECESSED LETTERS TWO (2) INCHES IN HEIGHT:

A. "STORM SEWER"
B. "DRAINS TO RIVER" OR "DRAINS TO WATERWAY"
C. "DUMP NO WASTE"
D. OTHER PHRASES SHALL REQUIRE APPROVAL OF THE WESTFIELD PUBLIC WORKS DEPARTMENT.

BEEHIVE CURB INLET CASTING

Westfield PUBLIC WORKS Parks • Utilities • Streets

RENEE LYNN GOFF REGISTERED No. 10403860 STATE OF INDIANA PROFESSIONAL ENGINEER

TOWN OF WESTFIELD, INDIANA

Renée Lynn Goff 4/10/06
DATE

FIGURE ST–10

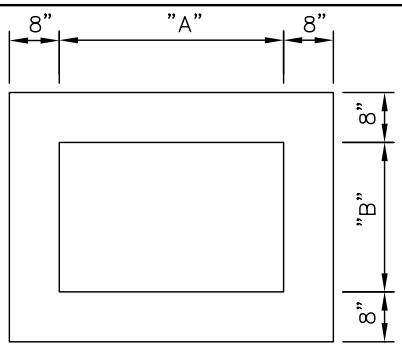

PLAN

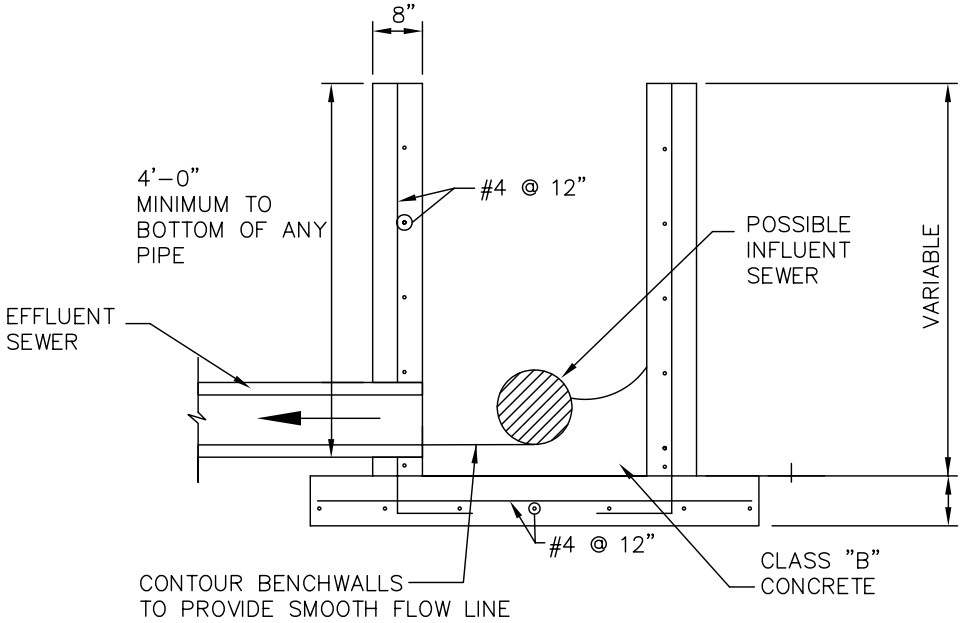

SECTION

CAST	"A"	"B"
TYPE 1	36"(0.91m)	24"(0.61m)
TYPE 2	24"(0.61m)	22"(0.56m)
TYPE 3	22"(0.56m)	20"(0.51m)

NOTE:

1. THESE DIMENSIONS ARE ALSO APPLICABLE TO TYPE "CA" CATCH BASINS. (See figure ST-13)
2. PRECAST INLETS AND CATCH BASINS SHALL BE CONSIDERED AN ACCEPTABLE ALTERNATE IF APPROVED BY THE WESTFIELD PUBLIC WORKS DEPARTMENT

INLET STRUCTURE TYPE 1A

Westfield PUBLIC WORKS Parks • Utilities • Streets

RENEE LYNN GOFF REGISTERED No. 10403860 STATE OF INDIANA PROFESSIONAL ENGINEER

TOWN OF WESTFIELD, INDIANA

Renée Lynn Goff 4/10/06
DATE

FIGURE ST-11

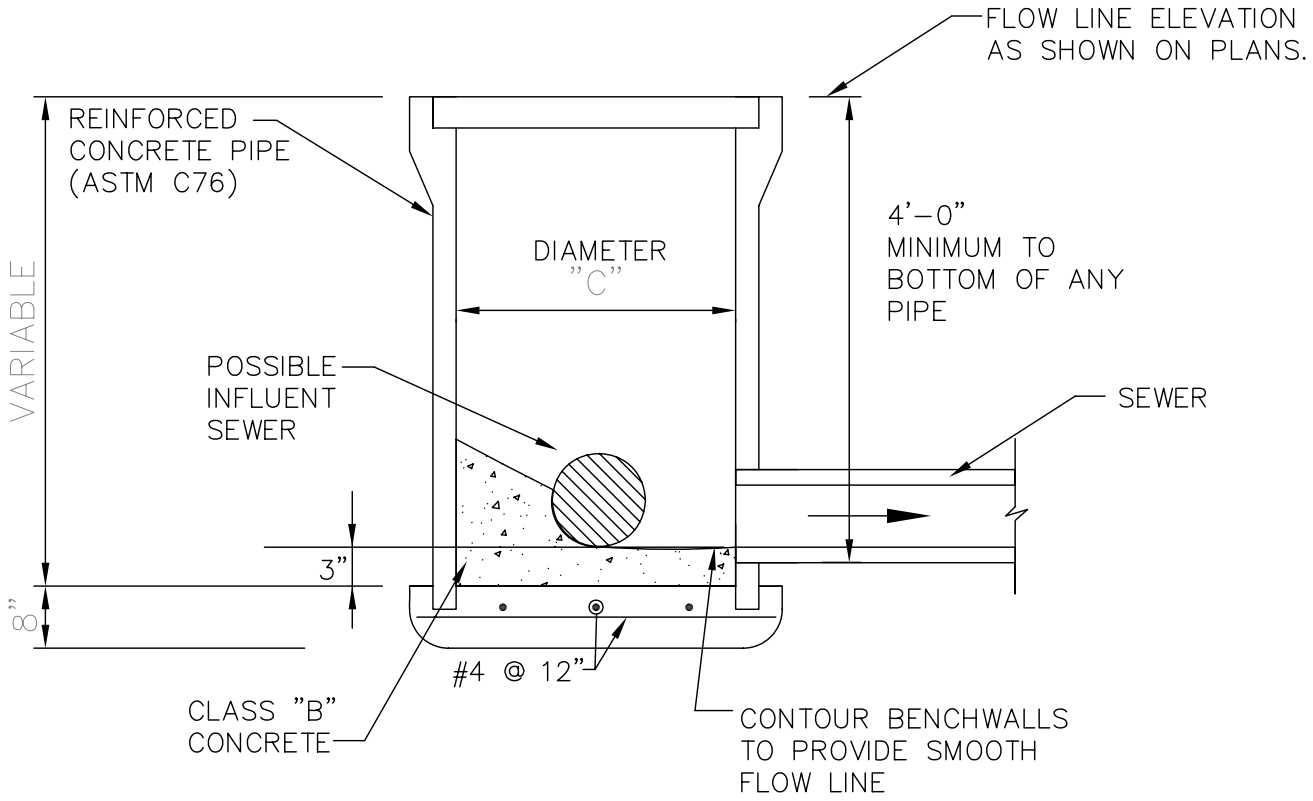

NOTE:

DIMENSION "C" SHALL BE 24" (0.61m) UNLESS OTHERWISE NOTED ON THE DRAWINGS

SECTION

CAST	"A"	"B"
TYPE 1	36" (0.91m)	24" (0.61m)
TYPE 2	24" (0.61m)	22" (0.56m)
TYPE 3	22" (0.56m)	20" (0.51m)

NOTES:

1. THESE DIMENSIONS ARE ALSO APPLICABLE TO TYPE CA CATCH BASINS.
2. PRECAST INLETS AND CATCH BASINS SHALL BE CONSIDERED AN ACCEPTABLE ALTERNATE IF APPROVED BY THE WESTFIELD PUBLIC WORKS DEPARTMENT.

INLET STRUCTURE TYPE 1

Westfield PUBLIC WORKS Parks • Utilities • Streets

RENEE LYNN GOFF REGISTERED No. 10403860 STATE OF INDIANA PROFESSIONAL ENGINEER

TOWN OF WESTFIELD, INDIANA

Renée Lynn Goff 4/10/06
DATE

FIGURE ST-12

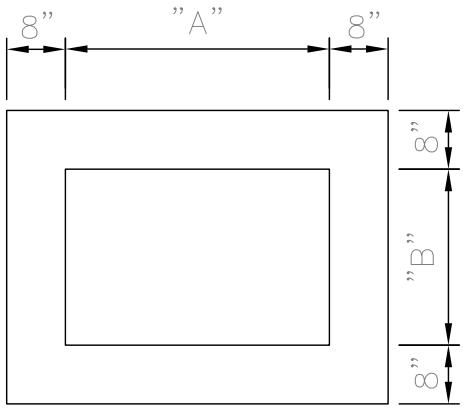

PLAN

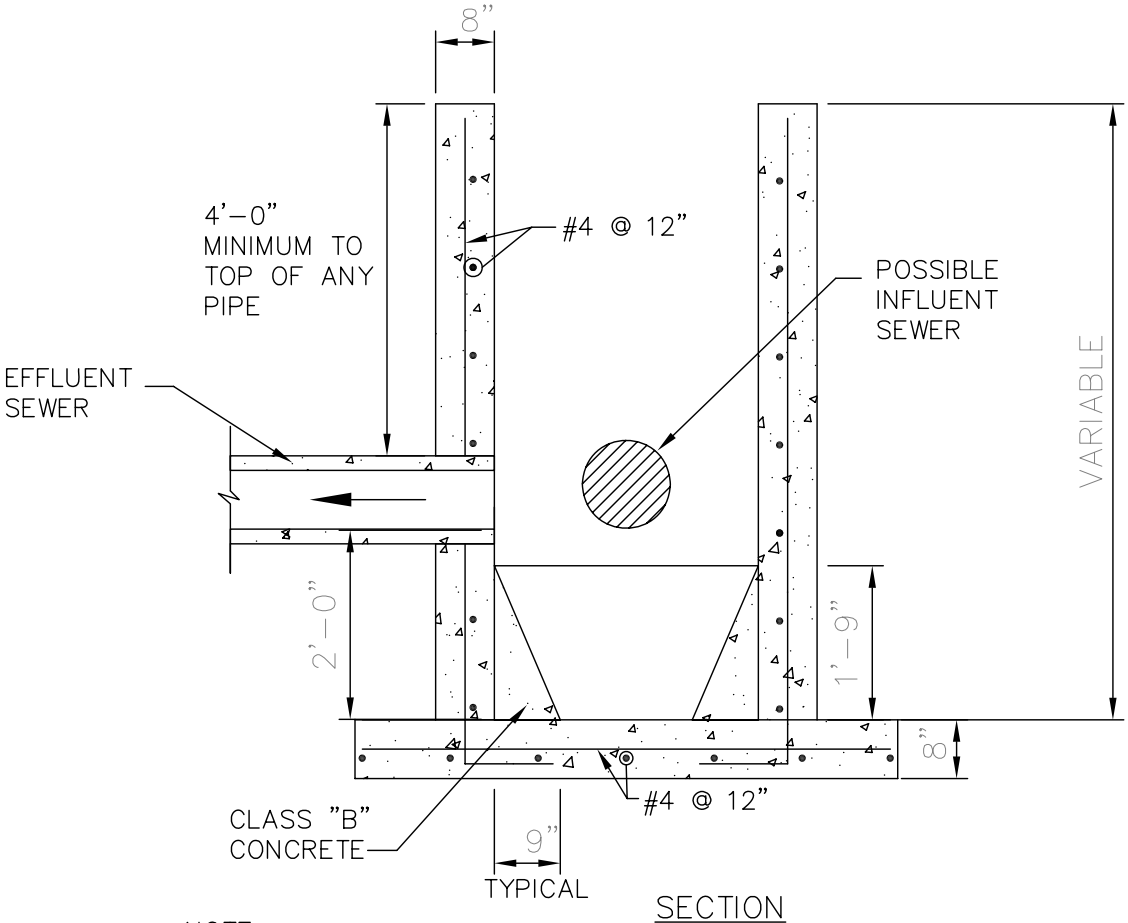

SECTION

NOTE:

1. DIMENSION "A" SHALL BE 36" (0.91m) AND DIMENSION "B" SHALL BE 24" (0.61m) UNLESS OTHERWISE NOTED ON THE DRAWINGS.

2. PRECAST CATCH BASINS SHALL BE CONSIDERED AN ACCEPTABLE ALTERNATE IF APPROVED BY THE WESTFIELD PUBLC WORKS DEPARTMENT

TYPE "CA" CATCH BASIN DETAIL

Westfield PUBLIC WORKS Parks • Utilities • Streets

RENEE LYNN GOFF REGISTERED No. 10403860 STATE OF INDIANA PROFESSIONAL ENGINEER

TOWN OF WESTFIELD, INDIANA

Renée Lynn Goff 4/10/06
DATE

FIGURE ST-13

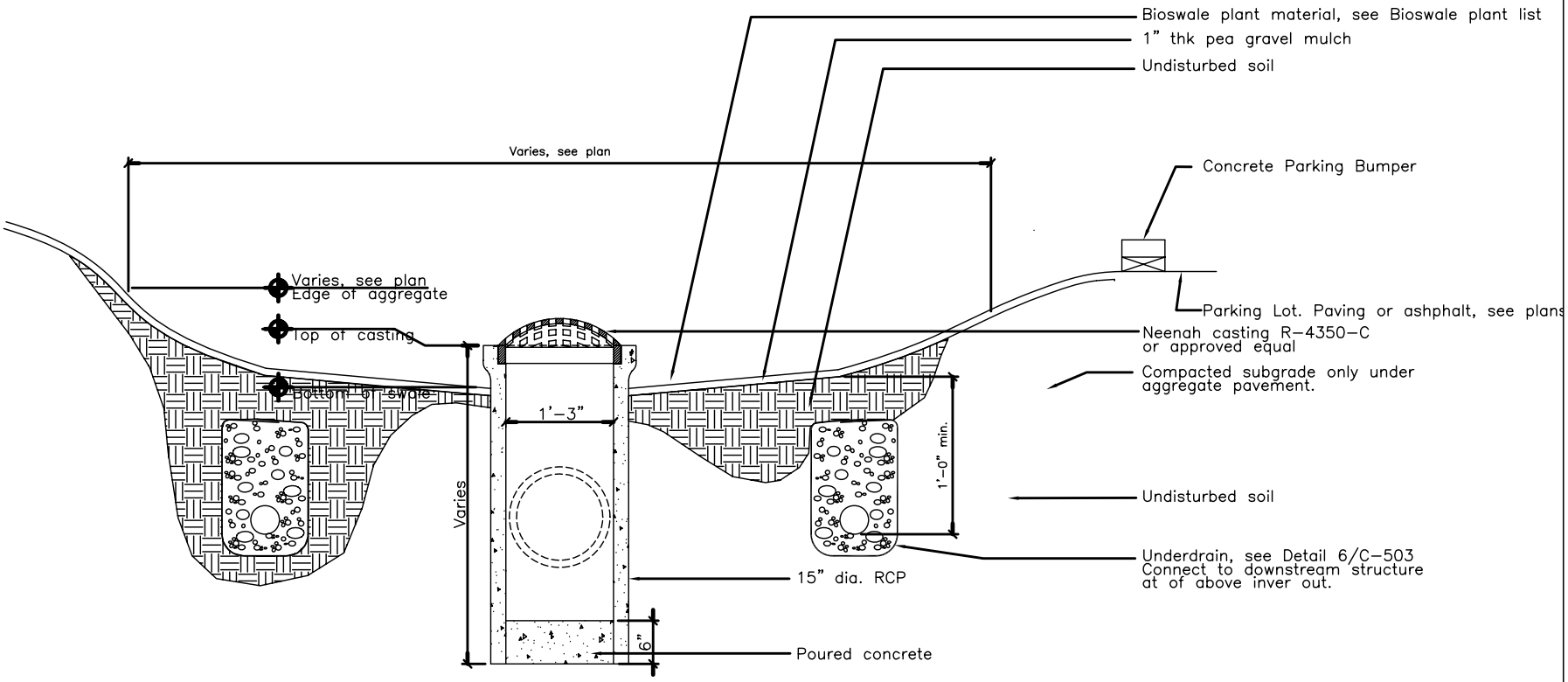

BIOSWALE DETAIL

Westfield PUBLIC WORKS Parks • Utilities • Streets

RENEE LYNN GOFF REGISTERED No. 10403860 STATE OF INDIANA PROFESSIONAL ENGINEER

TOWN OF WESTFIELD, INDIANA

Renée Lynn Goff 4/10/06
DATE

FIGURE ST-14

PIPE SIZE (INCHES)	STRUCTURES LESS THAN 48" FROM T/C TO INVERT (INCHES)	STRUCTURES GREATER THAN 48" FROM T/C TO INVERT	ANGLE AND QUALITY OF PIPES WILL REQUIRE SPECIAL DESIGN	STEPS REQUIRED	CURB CASTING #R-3501N	CASTING #3501 TL & TR
12 TO 18	24 X 24	***	DESIGN APPROVAL	NO	YES	YES
12 TO 21	30 X 30	***	DESIGN APPROVAL	NO	YES	YES
18 TO 21		MH/BOX	DESIGN APPROVAL	YES	YES	YES
21 TO 27	24 X 36* OR 36 X 36	***	DESIGN APPROVAL	NO	NO	YES
12 TO 24	36 X 36	***	DESIGN APPROVAL	NO	YES	YES
24 OR LARGER	DESIGN APPROVAL	***	DESIGN APPROVAL	NO	NO	YES
24 OR LARGER		MH/BOX	DESIGN APPROVAL	YES**	YES	YES

* PIPES NO LARGER THAN 18" CAN BE USED IN THE 2' SIDE OF THIS BOX.

**INCOMING AND OUT GOING PIPES EFFECT STEPS IN THIS STRUCTURE.

***SPECIAL NOTE: STRUCTURES DEEPER THAN 48" FROM T/C TO INVERT WILL BE A M.H. OR A BOX WITH STEPS UNLESS SPECIAL DESIGN IS APPROVED.

SPECIAL NOTE: STRUCTURES WILL BE DESIGNED FOR MAXIMUM FLOW IN PIPES.

SPECIAL NOTE: TOWN MAY REQUIRE STEPS TO BE INSTALLED AFTER STRUCTURE IS SET, TO IMPROVE ACCESS.

STORM STRUCTURE SIZING TABLE

Westfield PUBLIC WORKS Parks • Utilities • Streets

RENEE LYNN GOFF REGISTERED No. 10403860 STATE OF INDIANA PROFESSIONAL ENGINEER

TOWN OF WESTFIELD, INDIANA

Renée Lynn Goff 4/10/06
DATE

FIGURE ST-15

STR. NO.	TC/RIM ELEV.	INV. IN	INV. OUT	DEPTH	STR. SIZE	STR. TYPE	CASTING TYPE	PIPE SIZE	DIRECTION OF PIPE IN/OUT	STORM BMP YES/NO

DEPTH = T/C - (INV + DIA + THICKNESS)

NOTE: TABLE TO BE LOCATED ON DEVELOPMENT PLAN.

STRUCTURE DATA TABLE

Westfield PUBLIC WORKS Parks • Utilities • Streets

RENEE LYNN GOFF REGISTERED No. 10403860 STATE OF INDIANA PROFESSIONAL ENGINEER

TOWN OF WESTFIELD, INDIANA

Renée Lynn Goff 4/10/06
DATE

FIGURE ST-16

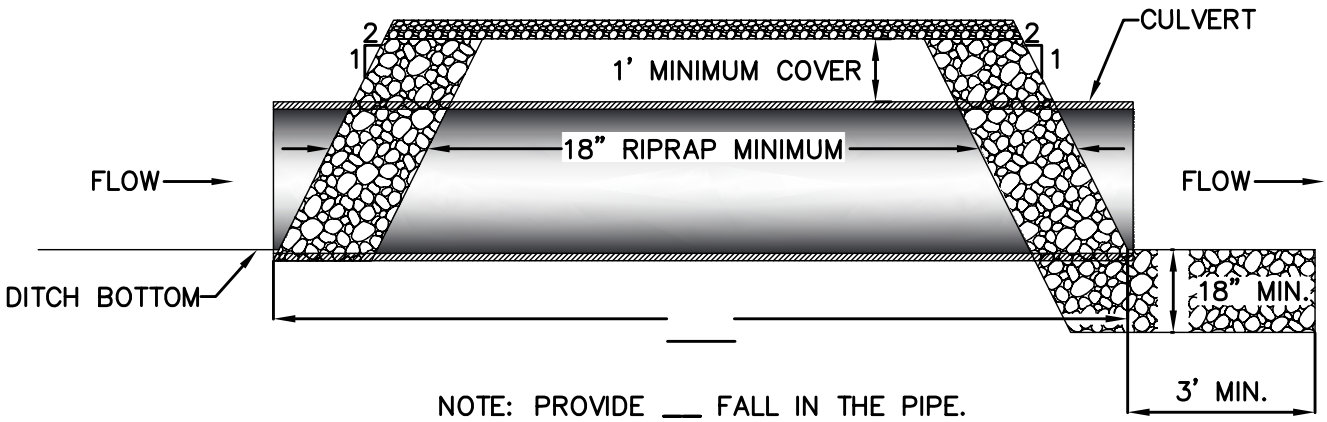

NOTE: PROVIDE ___ FALL IN THE PIPE.

TOE OF SLOPE TO COINCIDE WITH END OF PIPE ON BOTH DOWNSTREAM AND UPSTREAM ENDS.

LONGITUDINAL SECTION

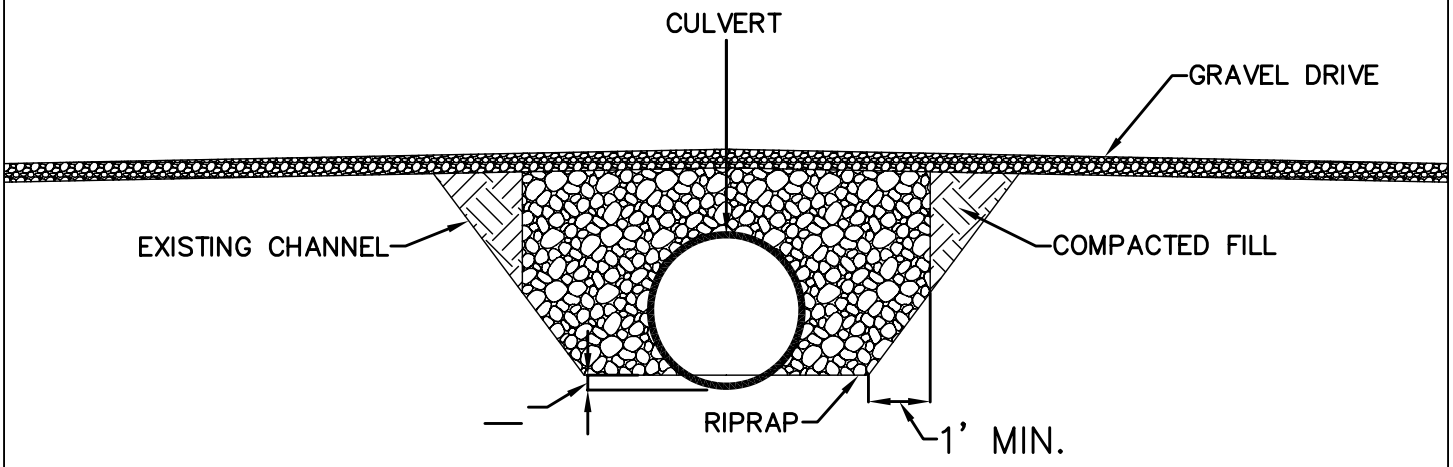

NOTE: GOOD COMPACTION OF THE FILL IS CRITICAL. THE CULVERT SHOULD BE DEPRESSED BELOW THE CHANNEL BOTTOM THE AMOUNT SHOWN ON THE PLAN.

ELEVATION

LENGTH OF PIPE:_____ DIAMETER AND PIPE MATERIAL: 1._____ OR

WIDTH OF ROADWAY:_____ 2._____

DEPRESSION BELOW FLOWLINE:_____ GRADIENT OF PIPE: _____

CULVERT BRIDGE INSTALLATION

Westfield PUBLIC WORKS Parks • Utilities • Streets

RENEE LYNN GOFF REGISTERED No. 10403860 STATE OF INDIANA PROFESSIONAL ENGINEER

TOWN OF WESTFIELD, INDIANA

Renée Lynn Goff 4/10/06
DATE

FIGURE ST-17

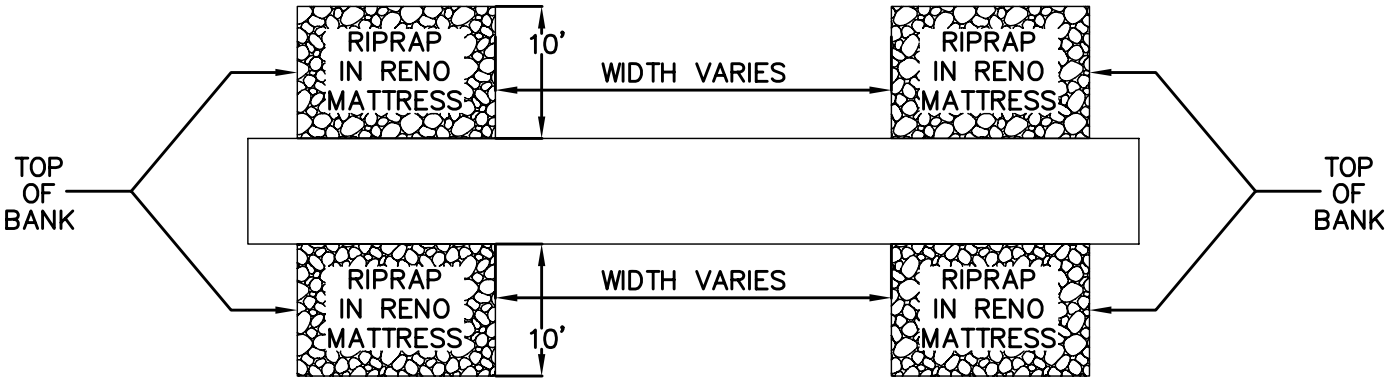

PLAN VIEW

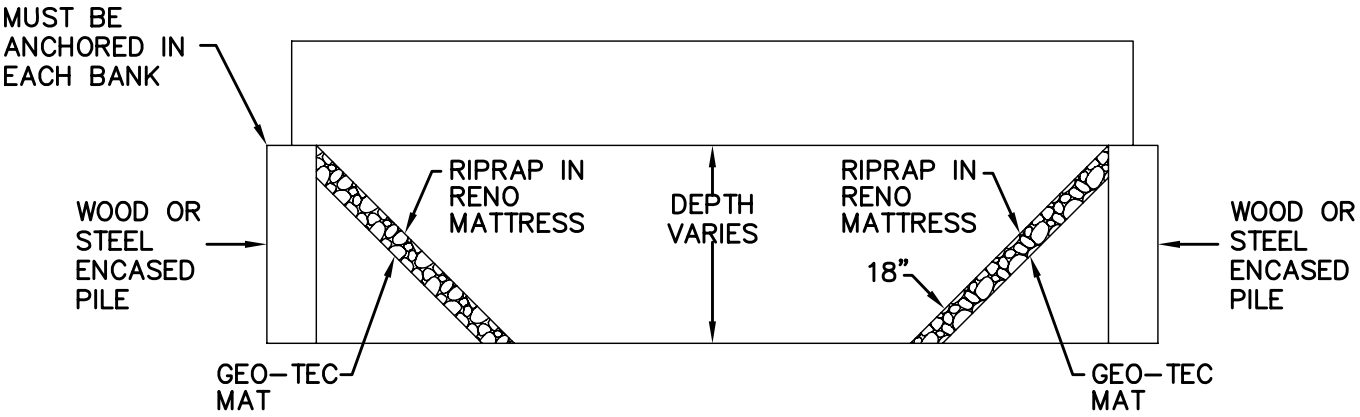

CROSS SECTION

Bridge must be clear span. No supports allowed from the top of the bank to the top of bank of ditch. No part of the structure may be lower than top of bank.
all structures, whether permanent or temporary, must be approved by the Town Engineer prior to construction.
Crossing may require IDNR approval based on location.

PEDESTRIAN BRIDGE CROSSINGS

Westfield PUBLIC WORKS Parks • Utilities • Streets

RENEE LYNN GOFF REGISTERED No. 10403860 STATE OF INDIANA PROFESSIONAL ENGINEER

TOWN OF WESTFIELD, INDIANA

Renée Lynn Goff 4/10/06
DATE

FIGURE ST-18

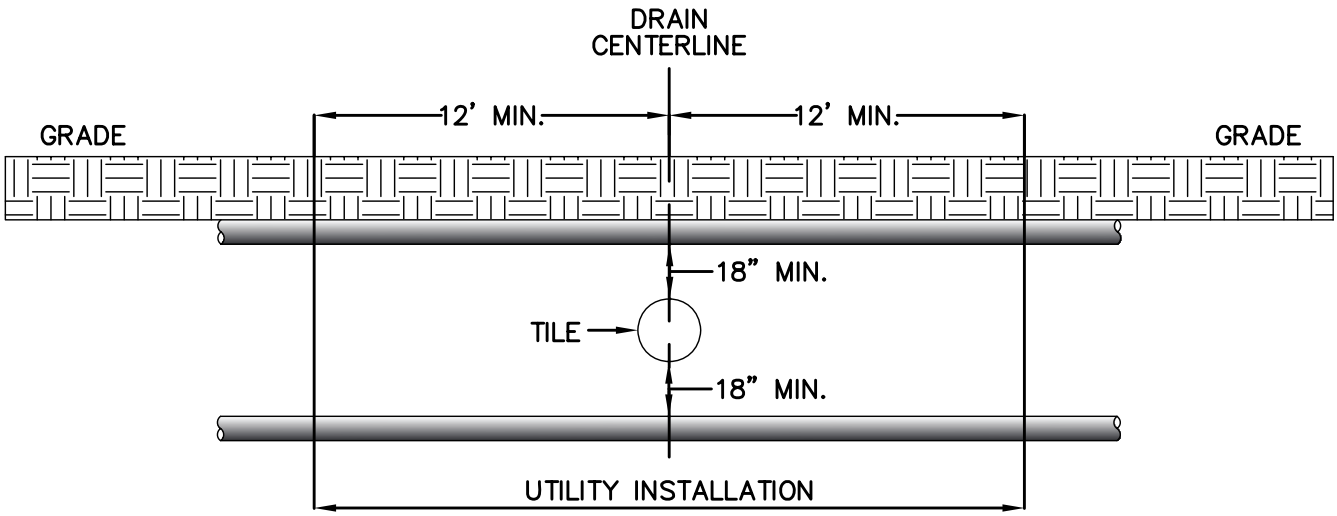

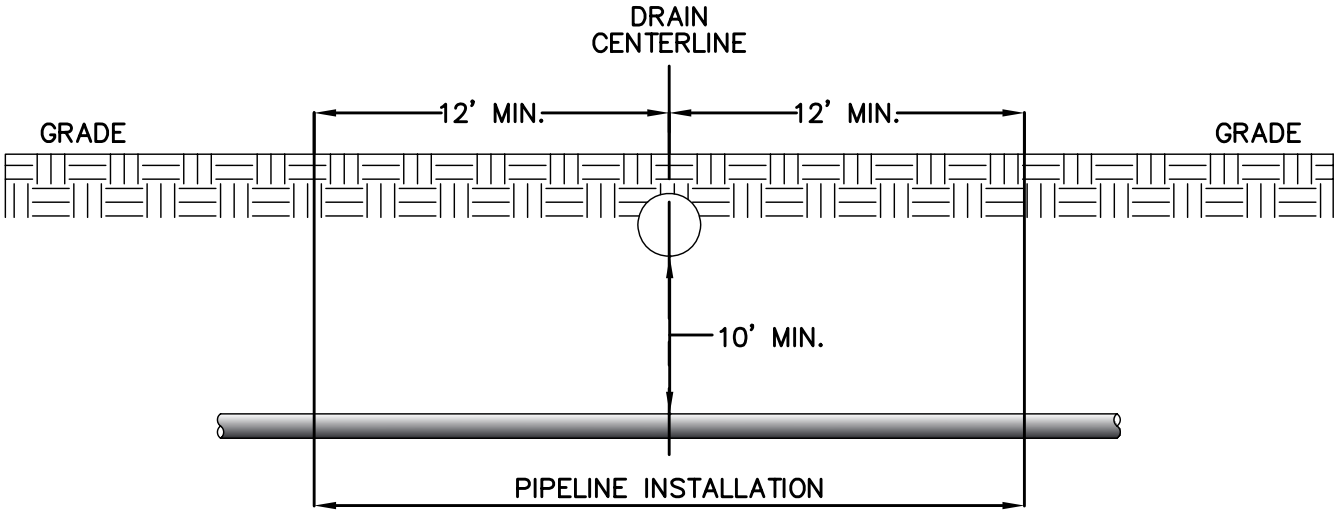

When installing a utility across a storm drain, the utility contractor will adhere to the following procedure.

1. Utility to be installed a minimum of eighteen (18") inches below or above existing tile.
2. If utility is to be installed using directional boring methods, the utility shall be a minimum of five (5') feet below the storm drain.
3. All petroleum pipelines and/or high pressure transmission lines are to be installed a minimum of ten (10') feet below existing invert of storm drains.
4. If sanitary sewer is installed under drain, sewer shall be encased with concrete. Minimal distance shall be measured from top of concrete encasement.
5. Utility contractor shall adhere to open drain crossing standard during construction process.
6. Notify Westfield Public Works at (317) 896–5452, two working days prior to installation and backfilling.

PIPELINE & UTILTIY INSTALLATION: TILE DRAIN

Westfield PUBLIC WORKS Parks • Utilities • Streets

RENEE LYNN GOFF REGISTERED No. 10403860 STATE OF INDIANA PROFESSIONAL ENGINEER

TOWN OF WESTFIELD, INDIANA

Renée Lynn Goff 4/10/06
DATE

FIGURE ST–19

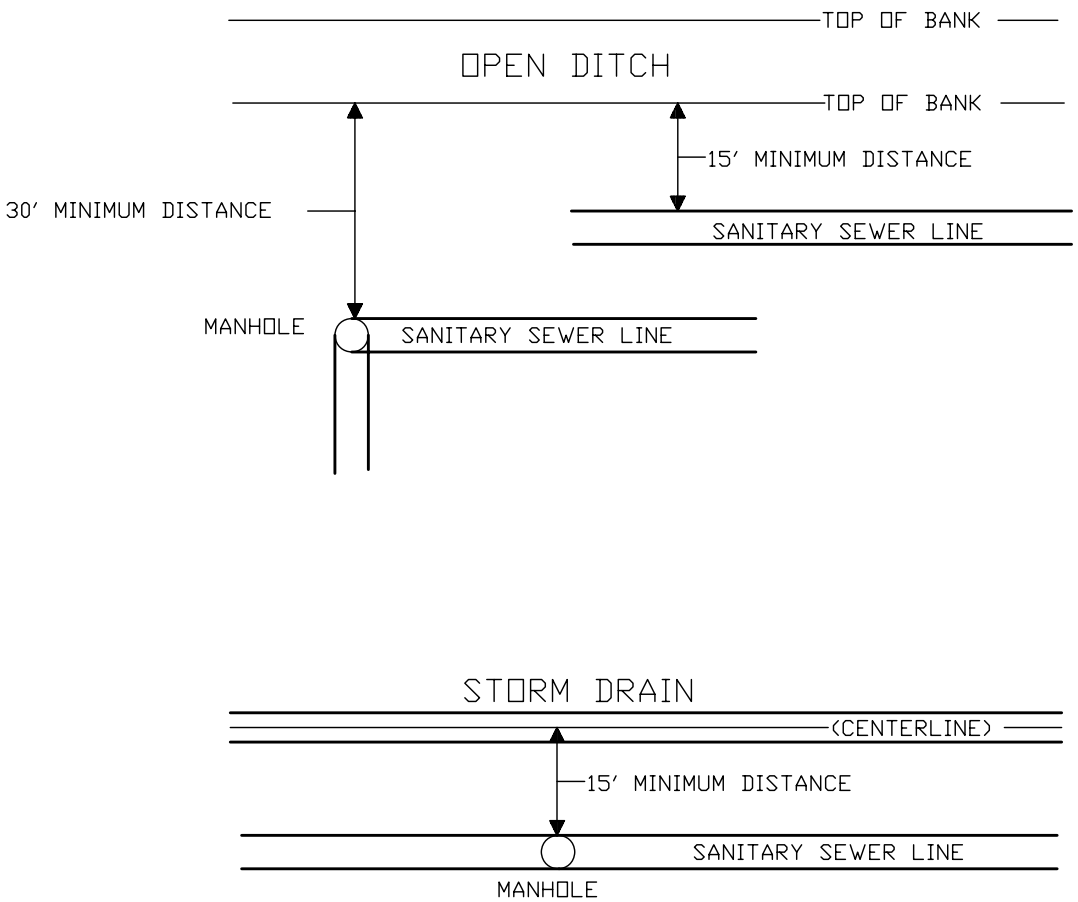

A SANITARY SEWER MANHOLE CANNOT BE LOCATED ANY CLOSER THAN 30 FEET FROM THE TOP OF BANK OF AN OPEN DITCH, OR 15 FEET FROM THE CENTERLINE OF A REGULATED DRAIN TILE.

THE ACTUAL SANITARY SEWER PIPE CANNOT BE LOCATED ANY CLOSER THAN 15 FEET FROM THE THE TOP OF BANK OF AN OPEN DITCH, OR FROM THE CENTERLINE OF A REGULATED DRAIN TILE.

DEEPER INSTALLATIONS OF SANITARY SEWERS MAY REQUIRE GREATER DISTANCE BETWEEN DRAIN AND SANITARY SEWER MANHOLE OR PIPE.

(DRAWING NOT TO SCALE)

STANDARD FOR SANITARY SEWERS BEING CONSTRUCTED ADJACENT TO AN OPEN DRAIN & PARALLEL TO STORM DRAINS

Westfield PUBLIC WORKS Parks • Utilities • Streets

RENEE LYNN GOFF REGISTERED No. 10403860 STATE OF INDIANA PROFESSIONAL ENGINEER

TOWN OF WESTFIELD, INDIANA

Renée Lynn Goff 4/10/06
DATE

FIGURE ST-20

When Excavating in, across, or through an open drain, the utility contractor will adhere to the following procedure:

1. Excavate silt basin:
   Silt basin location & length to be determined in field by Town Engineer or designated representative. Contractor shall maintain silt basin throughout work duration.

2. Riprap shall be keyed or pressed into ditch bank at location of excavation on bank and slope. Riprap stone shall be 9 inches graded. Riprap area will be one foot in depth, 4 feet minimum in height from flow line, 4 feet minimum in width. No riprap will be placed in flow line of drain.

3. All Disturbed areas, other than bank slope are to be seeded and mulched. The contractor has the option of using an erosion fabric if desired.

4. Notify the Town Engineer at (317) 896–5452, two working days prior to back–filling.

5. Must meet all other Federal, State, and Local Regulations.

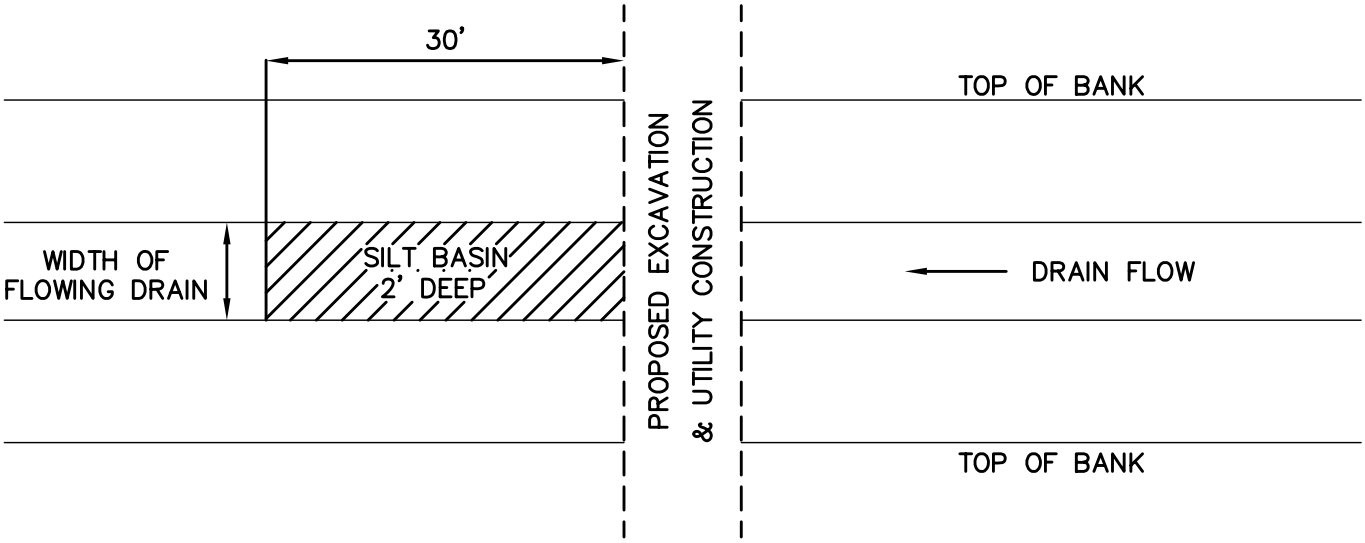

OPEN DRAIN CROSSING

Westfield PUBLIC WORKS Parks • Utilities • Streets

RENEE LYNN GOFF REGISTERED No. 10403860 STATE OF INDIANA PROFESSIONAL ENGINEER

TOWN OF WESTFIELD, INDIANA

Renée Lynn Goff 4/10/06
DATE

FIGURE ST–21

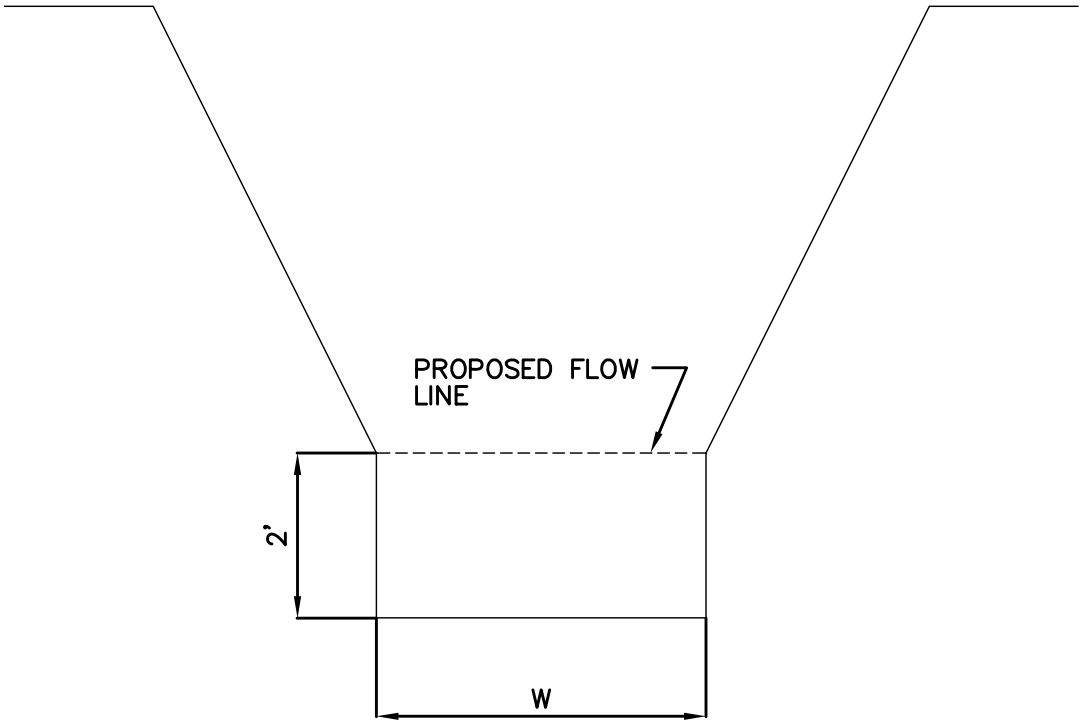

CROSS SECTION

W: VARIES – SEE PLAN
L: VARIES – SEE PLAN

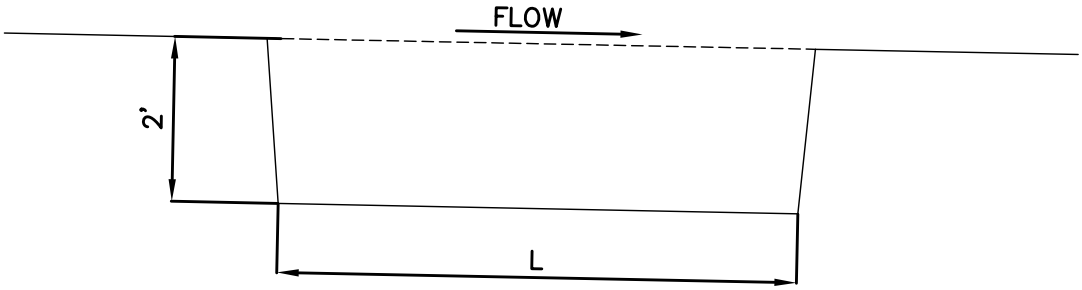

PROFILE

SILT BASIN

Westfield PUBLIC WORKS Parks • Utilities • Streets

RENEE LYNN GOFF REGISTERED No. 10403860 STATE OF INDIANA PROFESSIONAL ENGINEER

TOWN OF WESTFIELD, INDIANA

Renée Lynn Goff 4/10/06
DATE

FIGURE ST–22

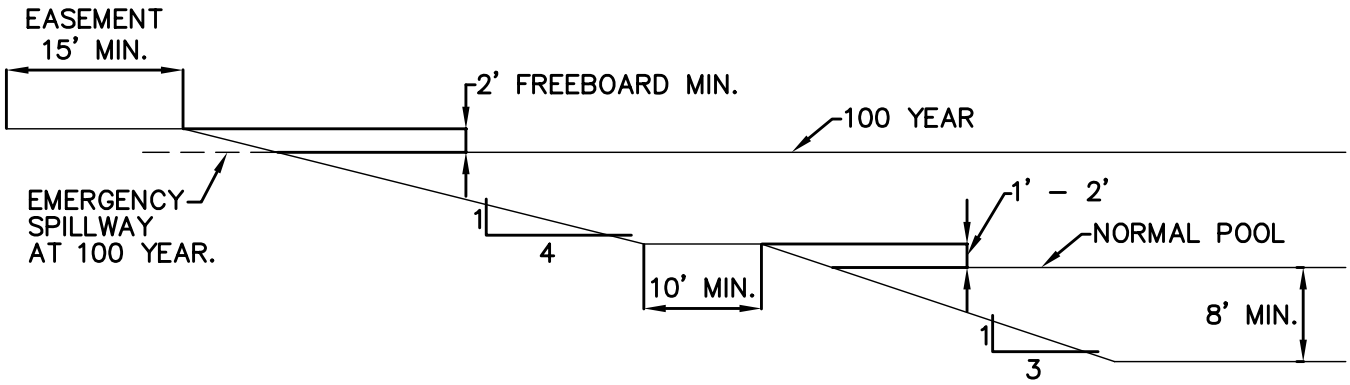

USE OUTLET OPTION 1 (SEE FIGURE ST–26)

LAKE CROSS SECTIONS: OPTION 1

Westfield PUBLIC WORKS Parks • Utilities • Streets

RENEE LYNN GOFF REGISTERED No. 10403860 STATE OF INDIANA PROFESSIONAL ENGINEER

TOWN OF WESTFIELD, INDIANA

Renée Lynn Goff 4/10/06
DATE

FIGURE ST–23

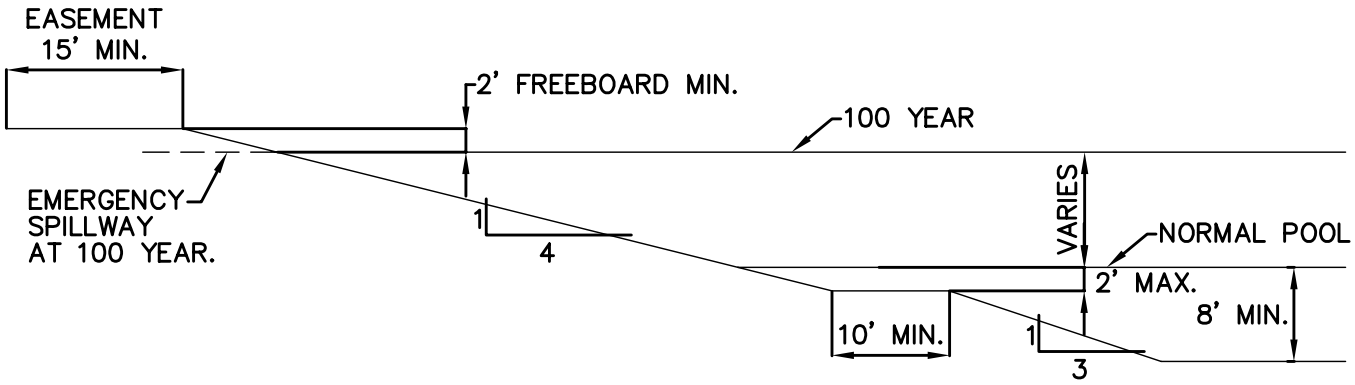

USE OUTLET OPTION 2 (SEE FIGURE ST–27)

LAKE CROSS SECTIONS: OPTION 2

Westfield PUBLIC WORKS Parks • Utilities • Streets

RENEE LYNN GOFF REGISTERED No. 10403860 STATE OF INDIANA PROFESSIONAL ENGINEER

TOWN OF WESTFIELD, INDIANA

Renée Lynn Goff 4/10/06
DATE

FIGURE ST–24

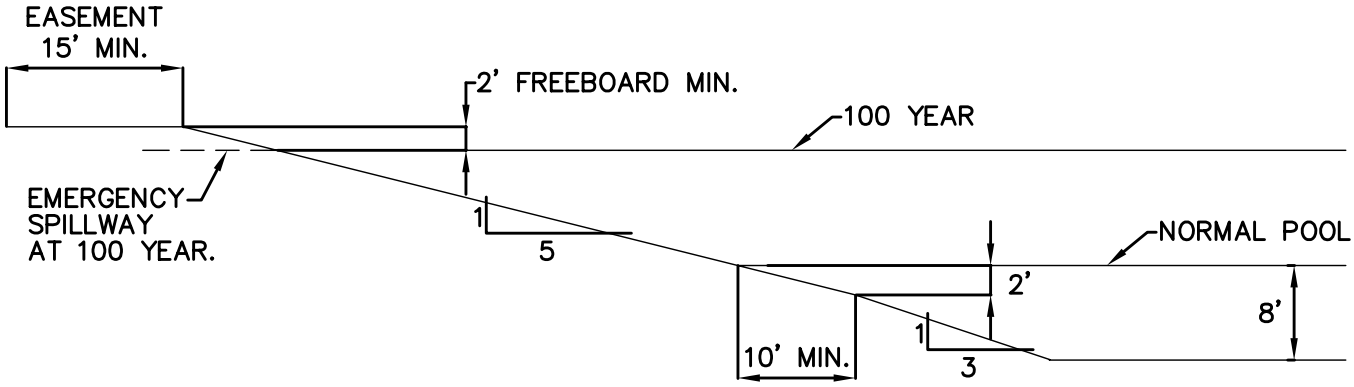

USE OUTLET OPTION 3 (SEE FIGURE ST–28)

LAKE CROSS SECTIONS: OPTION 3

Westfield PUBLIC WORKS Parks • Utilities • Streets

RENEE LYNN GOFF REGISTERED No. 10403860 STATE OF INDIANA PROFESSIONAL ENGINEER

TOWN OF WESTFIELD, INDIANA

Renée Lynn Goff 4/10/06
DATE

FIGURE ST–25

UNDERWATER DISCHARGE NOT ALLOWED

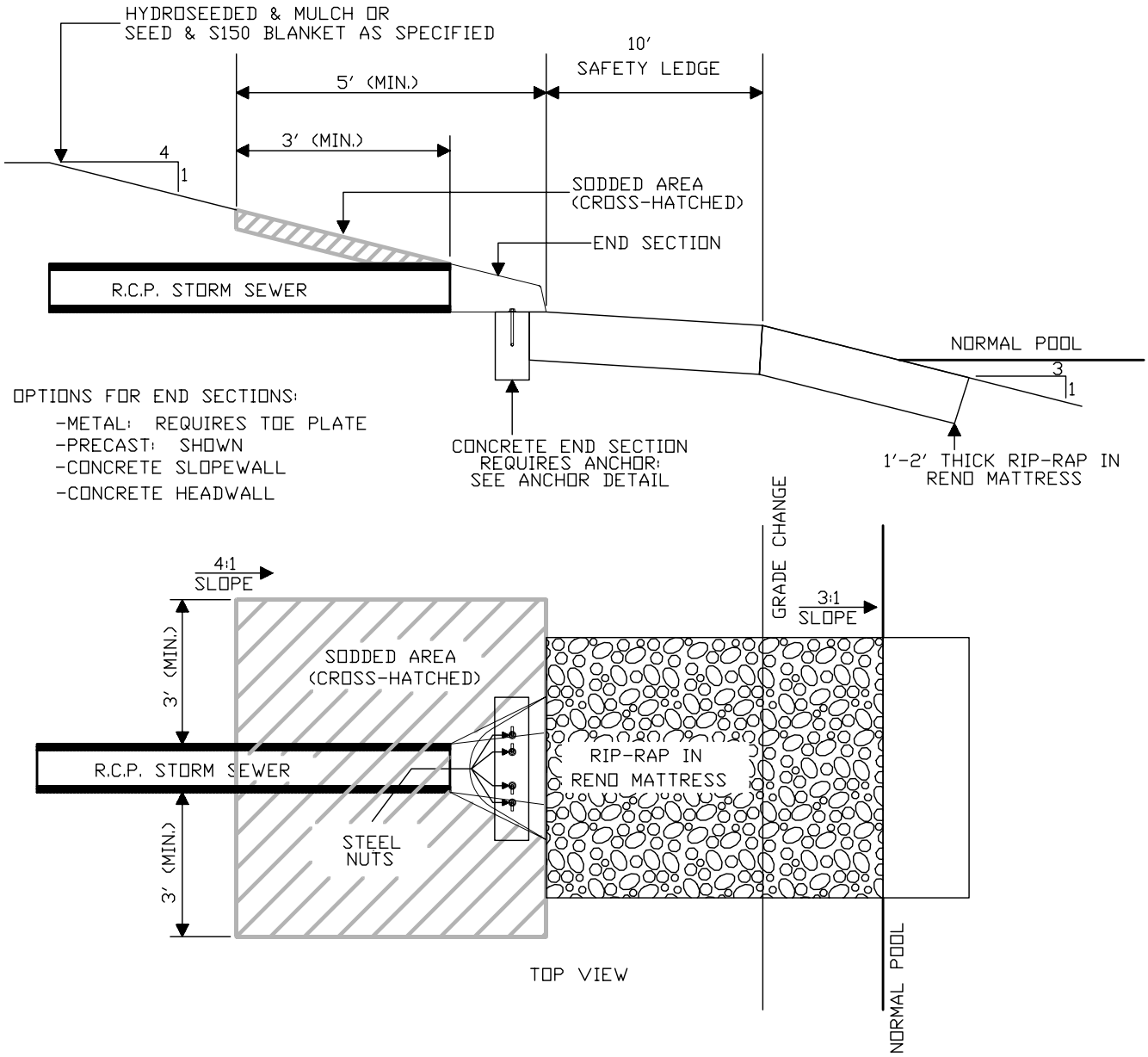

(DRAWING NOT TO SCALE)

LAKE OUTLET DETAIL
FOR LAKE CROSS-SECTION OPTION 1

Westfield PUBLIC WORKS Parks • Utilities • Streets

RENEE LYNN GOFF REGISTERED No. 10403860 STATE OF INDIANA PROFESSIONAL ENGINEER

TOWN OF WESTFIELD, INDIANA

Renée Lynn Goff 4/10/06
DATE

FIGURE ST-26

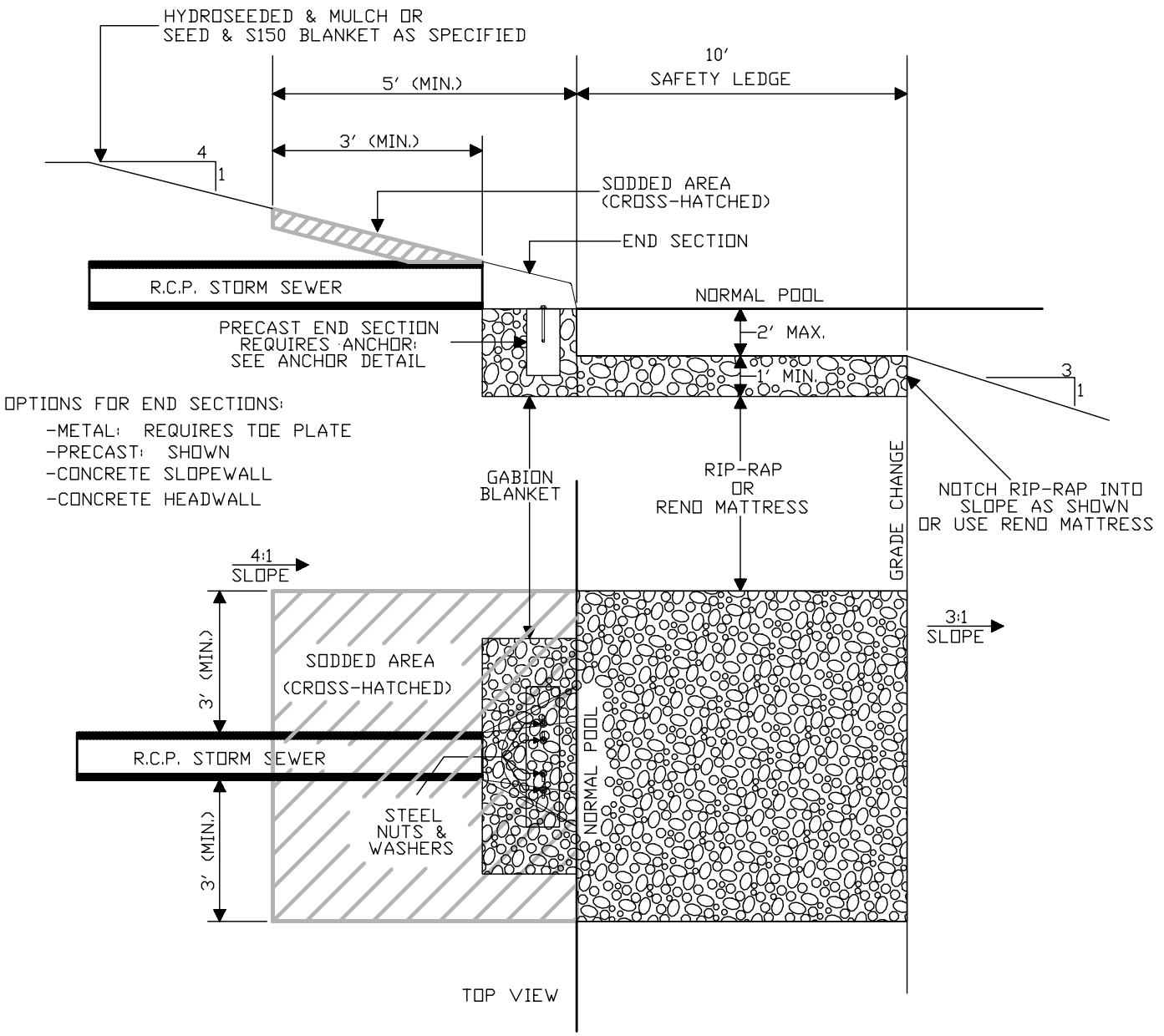

(DRAWING NOT TO SCALE)

LAKE OUTLET DETAIL
FOR LAKE CROSS-SECTION OPTION 2

Westfield PUBLIC WORKS Parks • Utilities • Streets

RENEE LYNN GOFF REGISTERED No. 10403860 STATE OF INDIANA PROFESSIONAL ENGINEER

TOWN OF WESTFIELD, INDIANA

Renée Lynn Goff 4/10/06
DATE

FIGURE ST-27

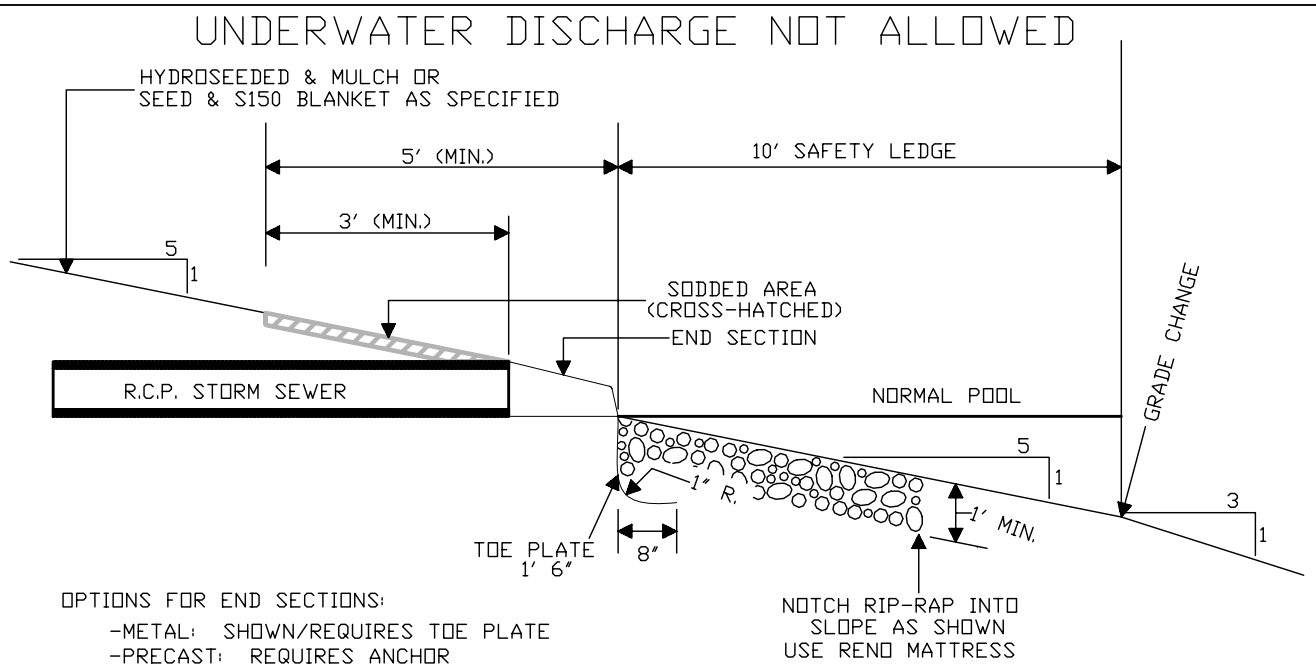

OPTIONS FOR END SECTIONS:

- -METAL: SHOWN/REQUIRES TOE PLATE
- -PRECAST: REQUIRES ANCHOR
- -CONCRETE SLOPEWALL
- -CONCRETE HEADWALL

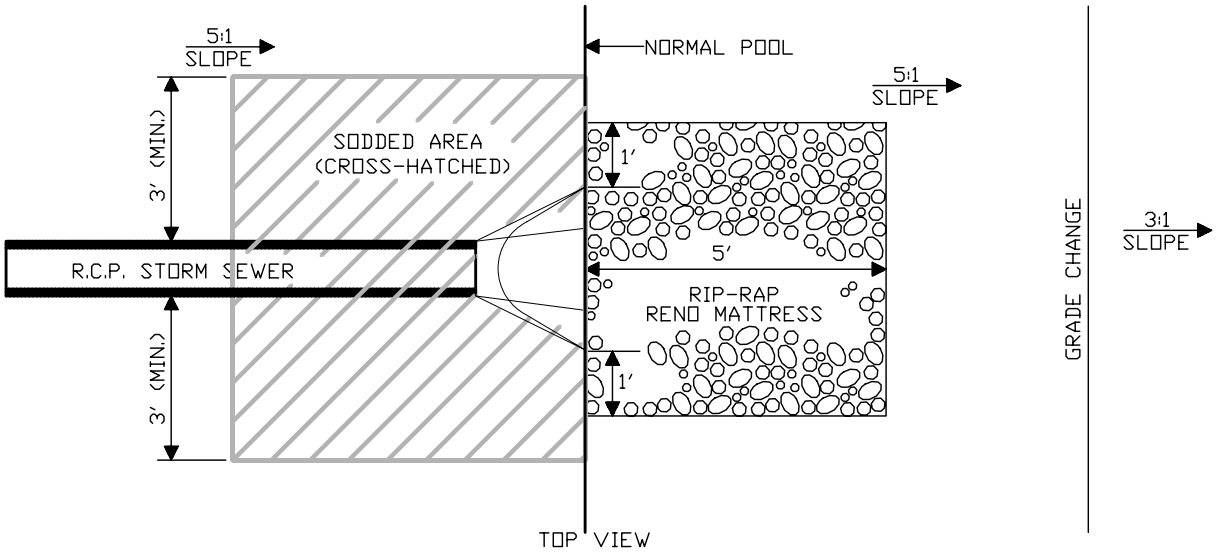

(DRAWING NOT TO SCALE)

LAKE OUTLET DETAIL
FOR LAKE CROSS-SECTION OPTION 3

Westfield PUBLIC WORKS Parks • Utilities • Streets

RENEE LYNN GOFF REGISTERED No. 10403860 STATE OF INDIANA PROFESSIONAL ENGINEER

TOWN OF WESTFIELD, INDIANA

Renée Lynn Goff 4/10/06
DATE

FIGURE ST-28

SIDE PROFILE

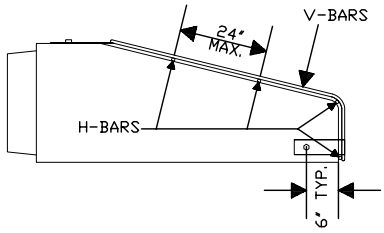

TOP VIEW

BOLT TO APRON 6" FROM EDGE OF CONCRETE
3 BOLT PLATES REQ'D:
¼"X4"X10"

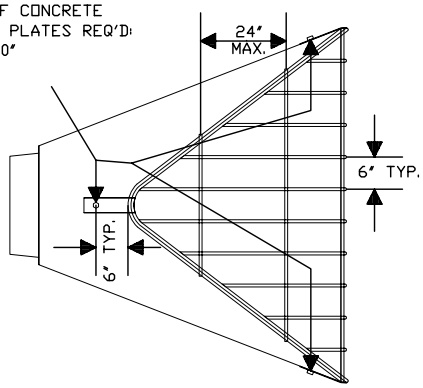

	Apron Size Inches	V-bar Size Inches	No. of H-bars Req'd	H-bar Size Inches	Bolt Dia. Inches	"A" Dim. Inches
Arch pipe aprons	18	1/2	3	5/8	1/2	5
	24	5/8	4	3/4	1/2	7
	30	5/8	4	3/4	1/2	7 1/2
	36	3/4	4	1	1/2	10 1/2
	42	3/4	4	1	3/4	11
	48	3/4	4	1 ½ pipe	3/4	12
	54	3/4	4	1 ½ pipe	3/4	12
	60	3/4	5	1 ½ pipe	3/4	14
	72	3/4	5	1 ½ pipe	3/4	14
	84	3/4	6	1 ½ pipe	3/4	15
Round pipe aprons	12	1/2	3	5/8	1/2	4
	15	1/2	3	5/8	1/2	4 1/2
	18	1/2	4	5/8	1/2	4 1/2
	21	1/2	4	5/8	1/2	5
	24	5/8	4	3/4	1/2	5
	27	5/8	4	3/4	1/2	5 1/2
	30	5/8	4	3/4	1/2	5 1/2
	36	3/4	4	1	3/4	8
	42	3/4	4	1	3/4	8
	48	3/4	5	1	3/4	8
	54	3/4	5	1 ½ pipe	3/4	8
	60	3/4	5	1 ½ pipe	3/4	8
	66	3/4	6	1 ½ pipe	3/4	8
	72	3/4	6	1 ½ pipe	3/4	9
	84	3/4	7	1 ½ pipe	3/4	10
	90	3/4	7	1 ½ pipe	3/4	14

NOTES:
1. BARS & PLATES ARE HOT-ROLLED STEEL.
2. BARS, PLATES, & PIPIE ARE FINISHED WITH 2 COATS OF ALUMINUM PAINT.
3. BOLTS ARE GALVINIZED
4. NO REBAR THROUGH PIPES WILL BE ALLOWED
5. DEBRIS GUARD SHALL BE REMOVABLE

(DRAWING NOT TO SCALE)

DEBRIS GUARD

Westfield PUBLIC WORKS Parks • Utilities • Streets

RENEE LYNN GOFF REGISTERED No. 10403860 STATE OF INDIANA PROFESSIONAL ENGINEER

TOWN OF WESTFIELD, INDIANA

Renée Lynn Goff 4/10/06
DATE

FIGURE ST-29

SIDE PROFILE

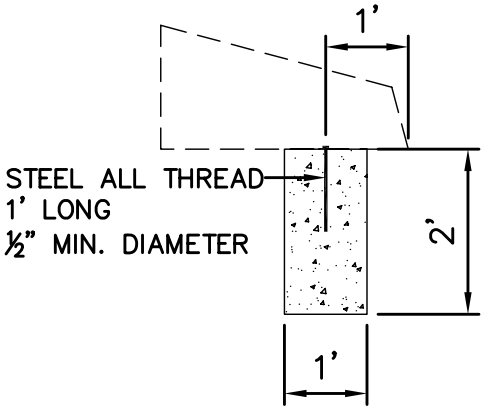

TOP VIEW

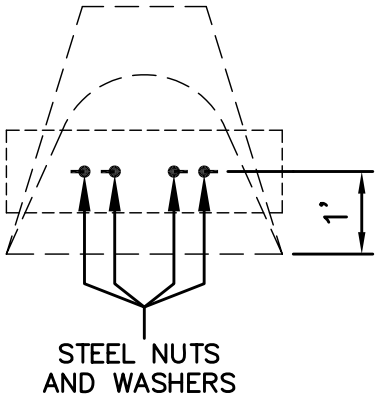

END PROFILE

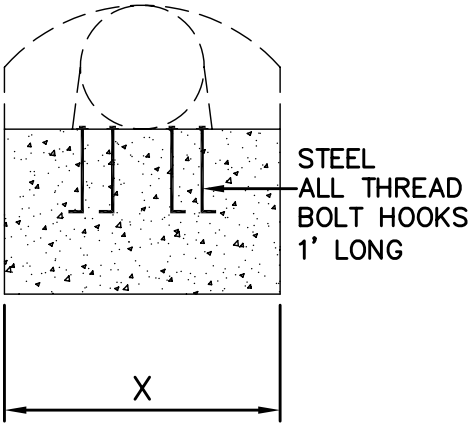

X = WIDTH OF END SECTION

ALLTHREAD SPACING TO BE TWO PER FOOT
EX: 12" END SECTION = 2 ALLTHREAD
24" END SECTION = 4 ALLTHREAD

ANCHOR FOR CONCRETE END SECTIONS

Westfield PUBLIC WORKS Parks • Utilities • Streets

RENEE LYNN GOFF REGISTERED No. 10403860 STATE OF INDIANA PROFESSIONAL ENGINEER

TOWN OF WESTFIELD, INDIANA

Renée Lynn Goff 4/10/06
DATE

FIGURE ST-30

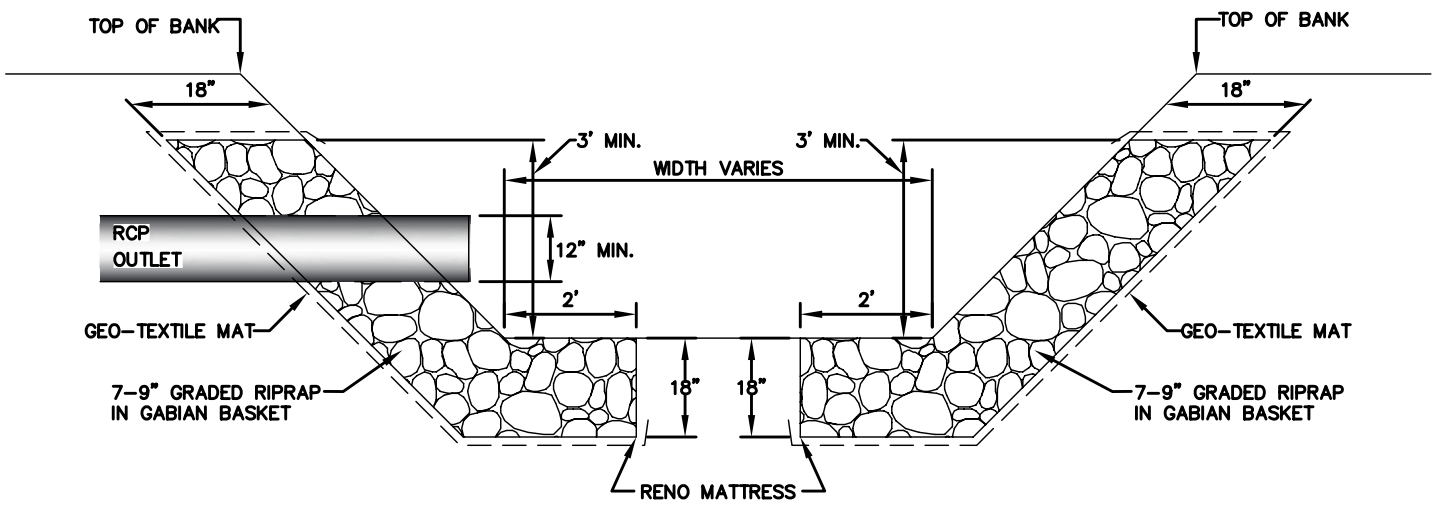

GEO-TEXTILE MAT SHALL EXTEND 6" ALL THE WAY AROUND THE PERIMETER OF THE RENO MATTRESS.

CROSS SECTION

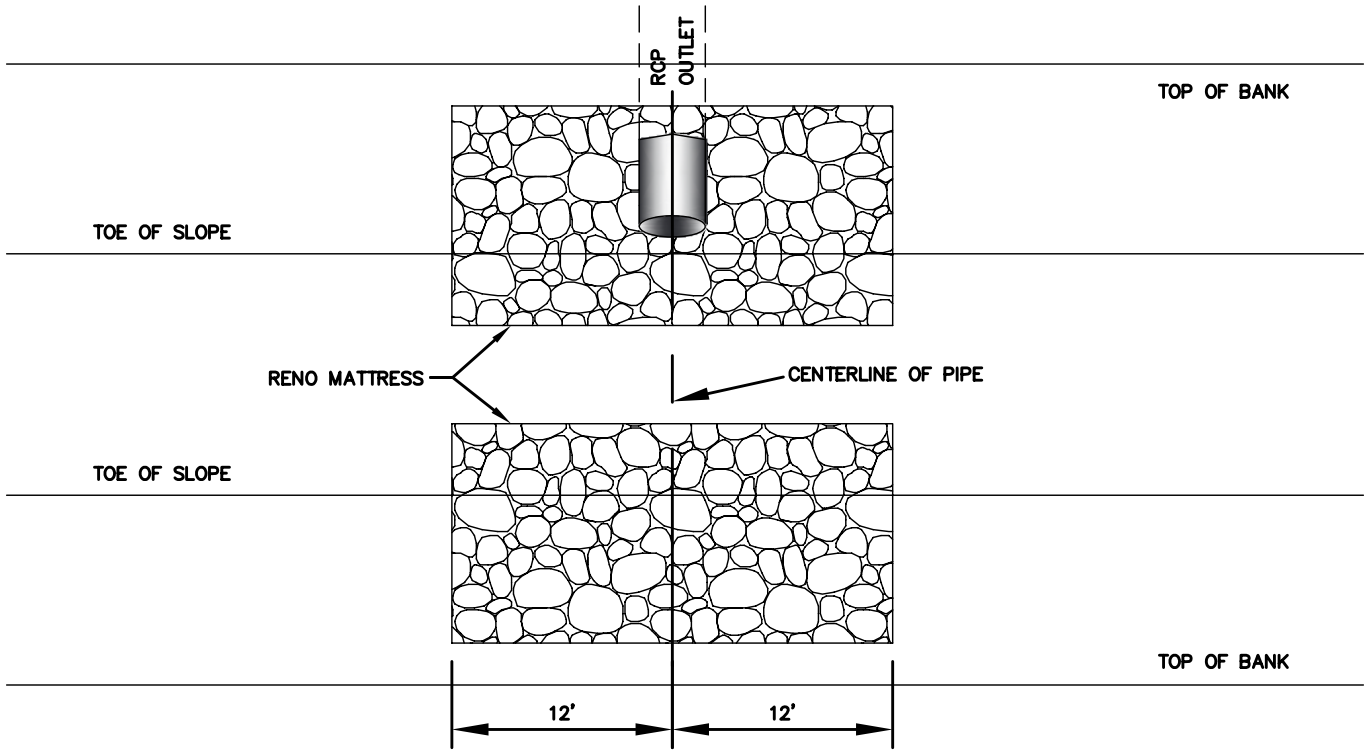

PLAN VIEW

BANK ARMORMENT AT OUTLET PIPE IN OPEN CHANNELS

Westfield PUBLIC WORKS Parks • Utilities • Streets

RENEE LYNN GOFF REGISTERED No. 10403860 STATE OF INDIANA PROFESSIONAL ENGINEER

TOWN OF WESTFIELD, INDIANA

Renée Lynn Goff 4/10/06
DATE

FIGURE ST-31

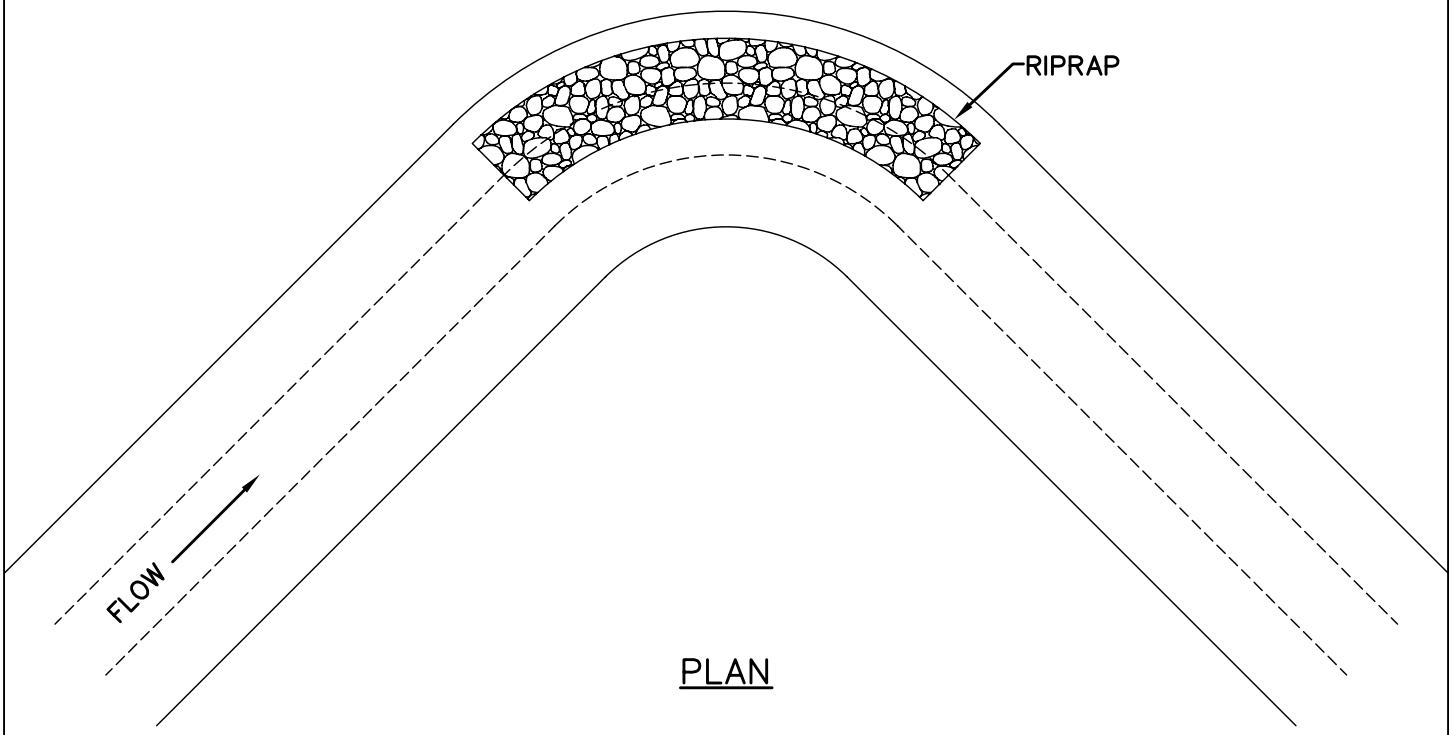

PLAN

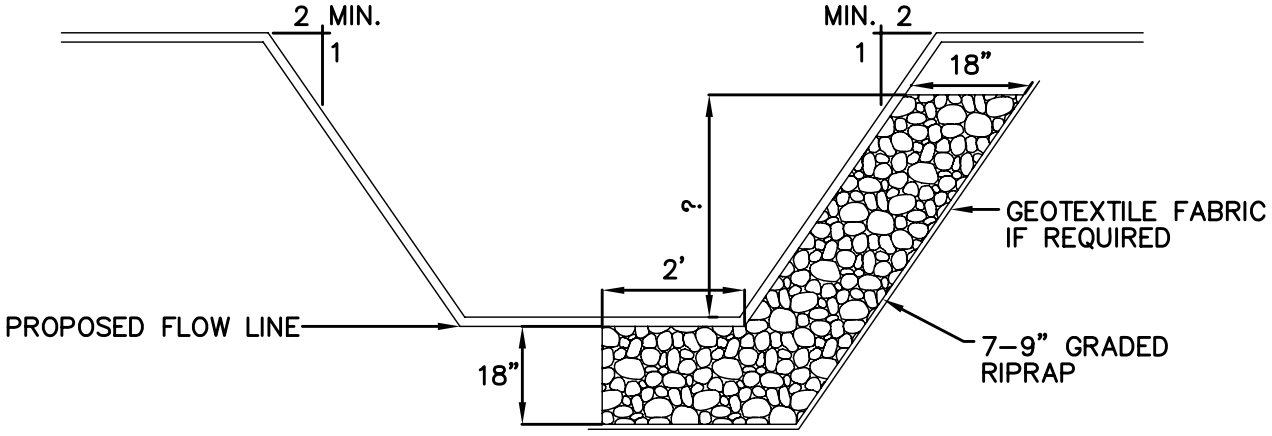

GEOTEXTILE FABRIC MAY BE REQUIRED, DEPENDING ON SOIL CONDITIONS.

CROSS SECTION

CORNER PROTECTION

Westfield PUBLIC WORKS Parks • Utilities • Streets

RENEE LYNN GOFF REGISTERED No. 10403860 STATE OF INDIANA PROFESSIONAL ENGINEER

TOWN OF WESTFIELD, INDIANA

Renée Lynn Goff 4/10/06
DATE

FIGURE ST–32

PIPE SIZE	A	B
12″	3′	4′
15″	3′	4′
18″	3′	4′
36″	4′	6′

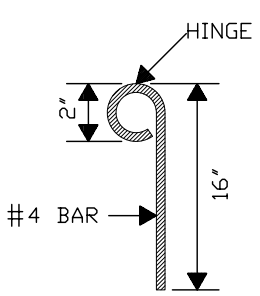

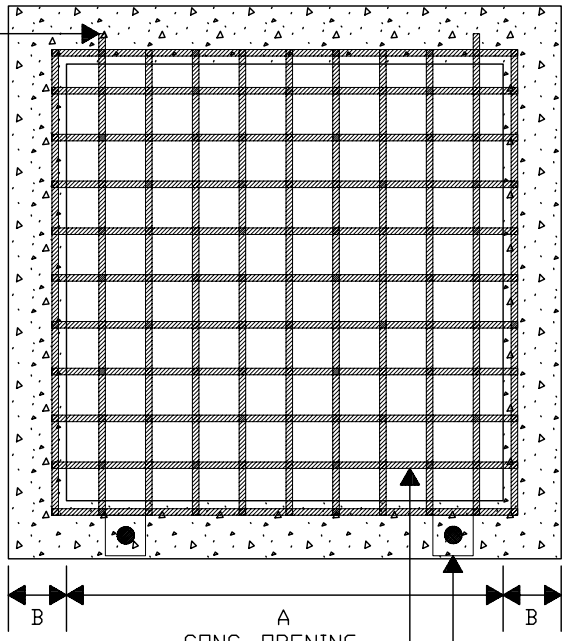

PLAN VIEW

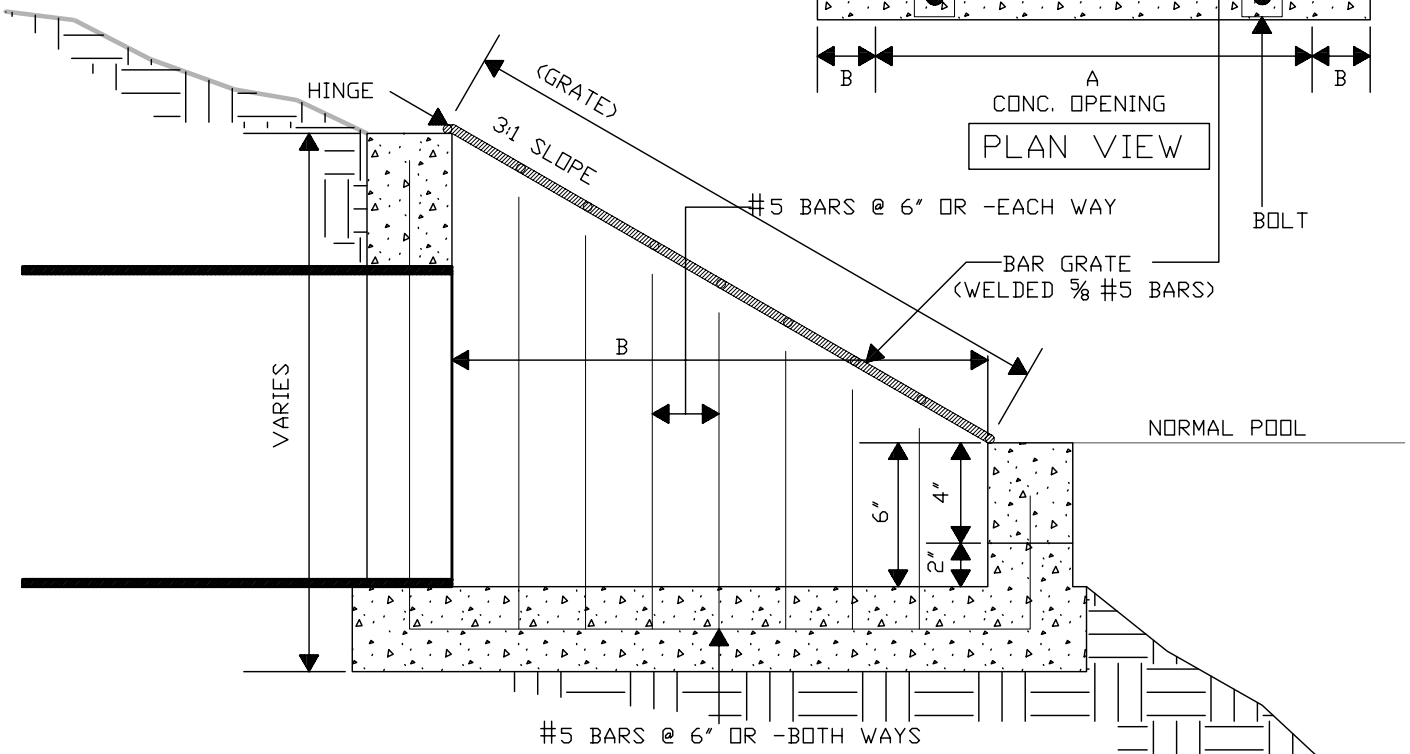

SECTION VIEW

(DRAWING NOT TO SCALE)

POND OUTFALL STRUCTURE

Westfield PUBLIC WORKS Parks • Utilities • Streets

RENEE LYNN GOFF REGISTERED No. 10403860 STATE OF INDIANA PROFESSIONAL ENGINEER

TOWN OF WESTFIELD, INDIANA

Renée Lynn Goff 4/10/06
DATE

FIGURE ST–33

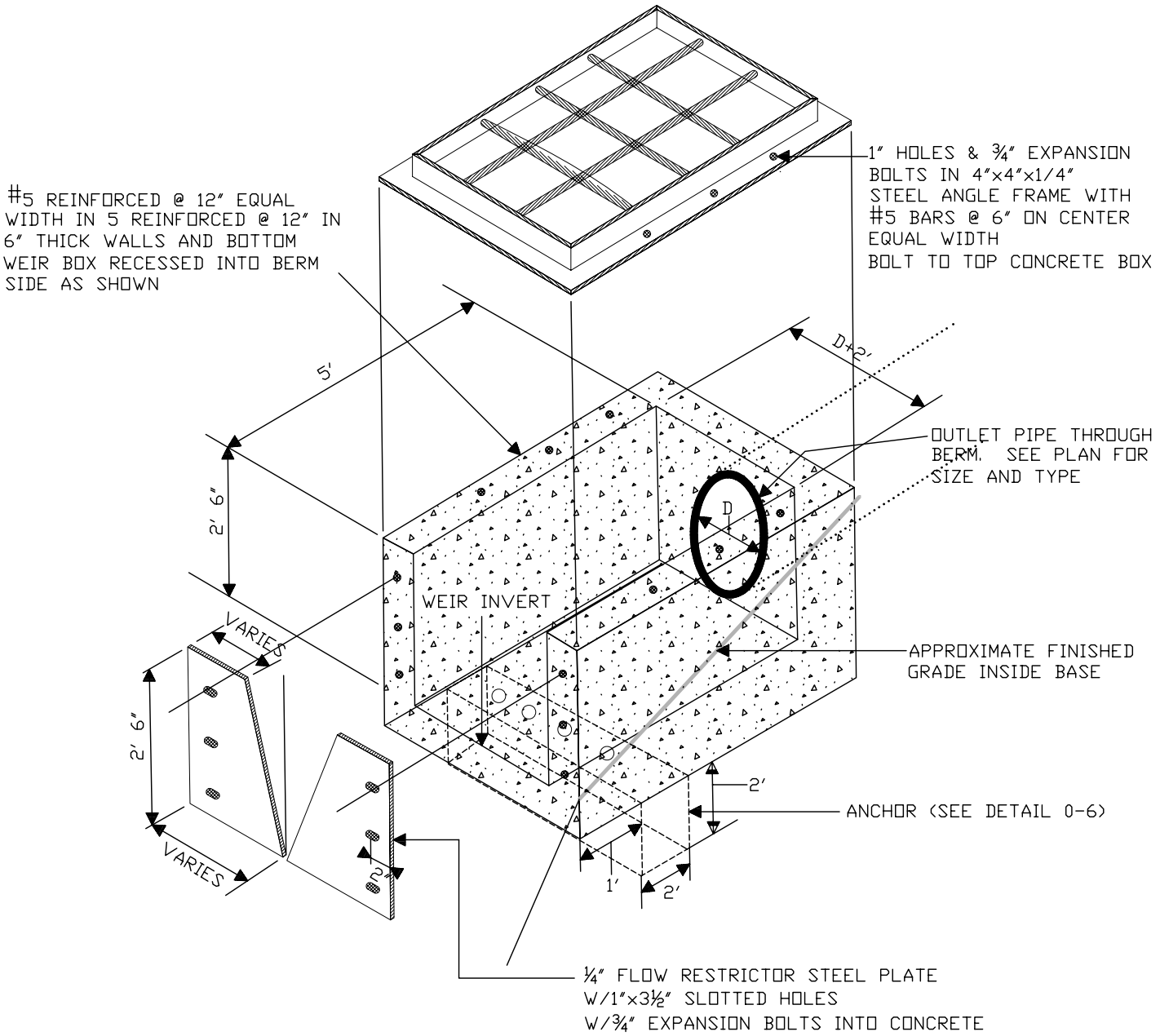

(DRAWING NOT TO SCALE)

ISOMETRIC @ WEIR OUTLET

Westfield PUBLIC WORKS Parks • Utilities • Streets

RENEE LYNN GOFF REGISTERED No. 10403860 STATE OF INDIANA PROFESSIONAL ENGINEER

TOWN OF WESTFIELD, INDIANA

Renée Lynn Goff 4/10/06
DATE

FIGURE ST-34

NOTE:

EXTENSION TO BE SECURED TO STEEL POST IN 2 LOCATIONS

TEMPORARY EXTENSION ABOUT GROUND TO BE REMOVED UPON CONNECTION TO HOUSE.

ALL MEASUREMENTS TO BE MEASURED FROM BACK OF CURB.

IF EXTENSION IS NOT UTILIZED, IT IS TO BE CAPPED BELOW GROUND LEVEL.

LATERAL CONNECTIONS SHALL BE STAMPED ON CURB. (SEE CURB STAMP DETAIL)

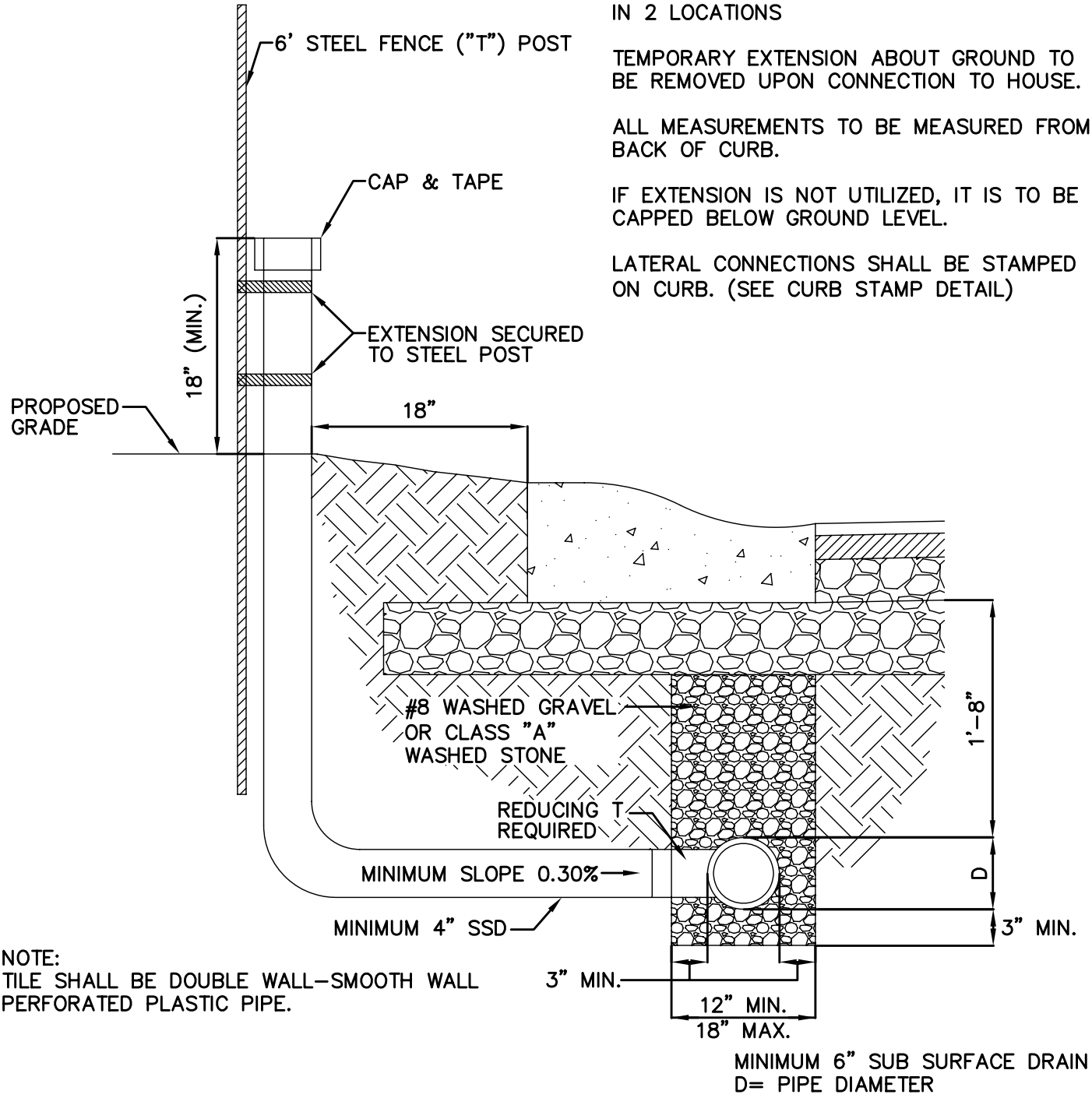

NOTE:
TILE SHALL BE DOUBLE WALL-SMOOTH WALL PERFORATED PLASTIC PIPE.

MINIMUM 6" SUB SURFACE DRAIN
D= PIPE DIAMETER

TYPICAL SSD LATERAL TO INDIVIDUAL LOTS ALONG STREETS

Westfield PUBLIC WORKS Parks • Utilities • Streets

RENEE LYNN GOFF REGISTERED No. 10403860 STATE OF INDIANA PROFESSIONAL ENGINEER

TOWN OF WESTFIELD, INDIANA

Renée Lynn Goff 4/10/06
DATE

FIGURE ST-35

NOTE:

TILE SHALL BE DOUBLE WALL–SMOOTH WALL PERFORATED PLASTIC PIPE.

EXTENSION TO BE SECURED TO STEEL POST IN 2 LOCATIONS

TEMPORARY EXTENSION ABOUT GROUND TO BE REMOVED UPON CONNECTION TO HOUSE.

IF EXTENSION IS NOT UTILIZED, IT IS TO BE CAPPED BELOW GROUND LEVEL.

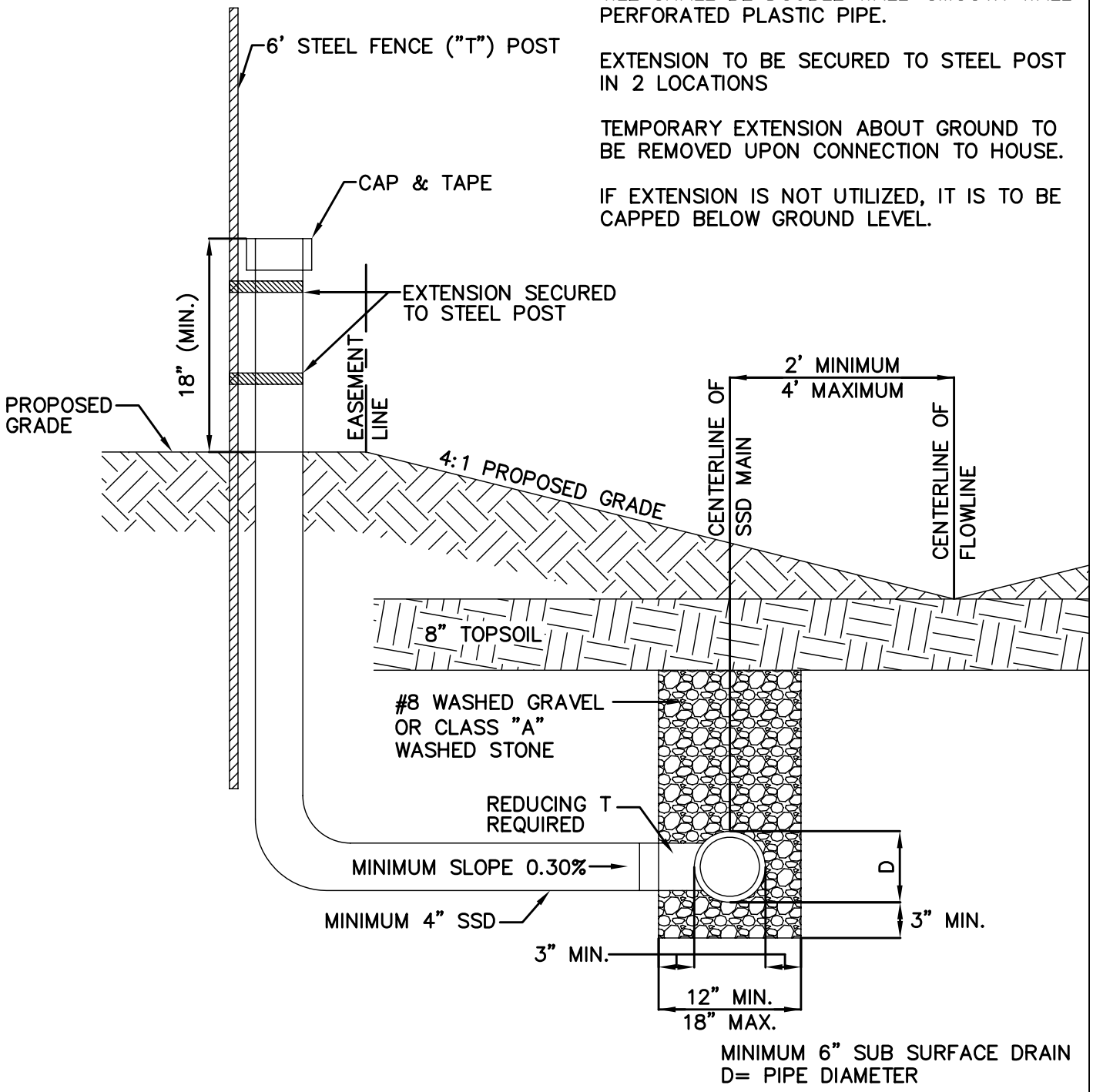

TYPICAL SSD LATERAL TO INDIVIDUAL LOTS IN REAR YARD

Westfield PUBLIC WORKS Parks • Utilities • Streets

RENEE LYNN GOFF REGISTERED No. 10403860 STATE OF INDIANA PROFESSIONAL ENGINEER

TOWN OF WESTFIELD, INDIANA

Renée Lynn Goff 4/10/06
DATE

FIGURE ST–36

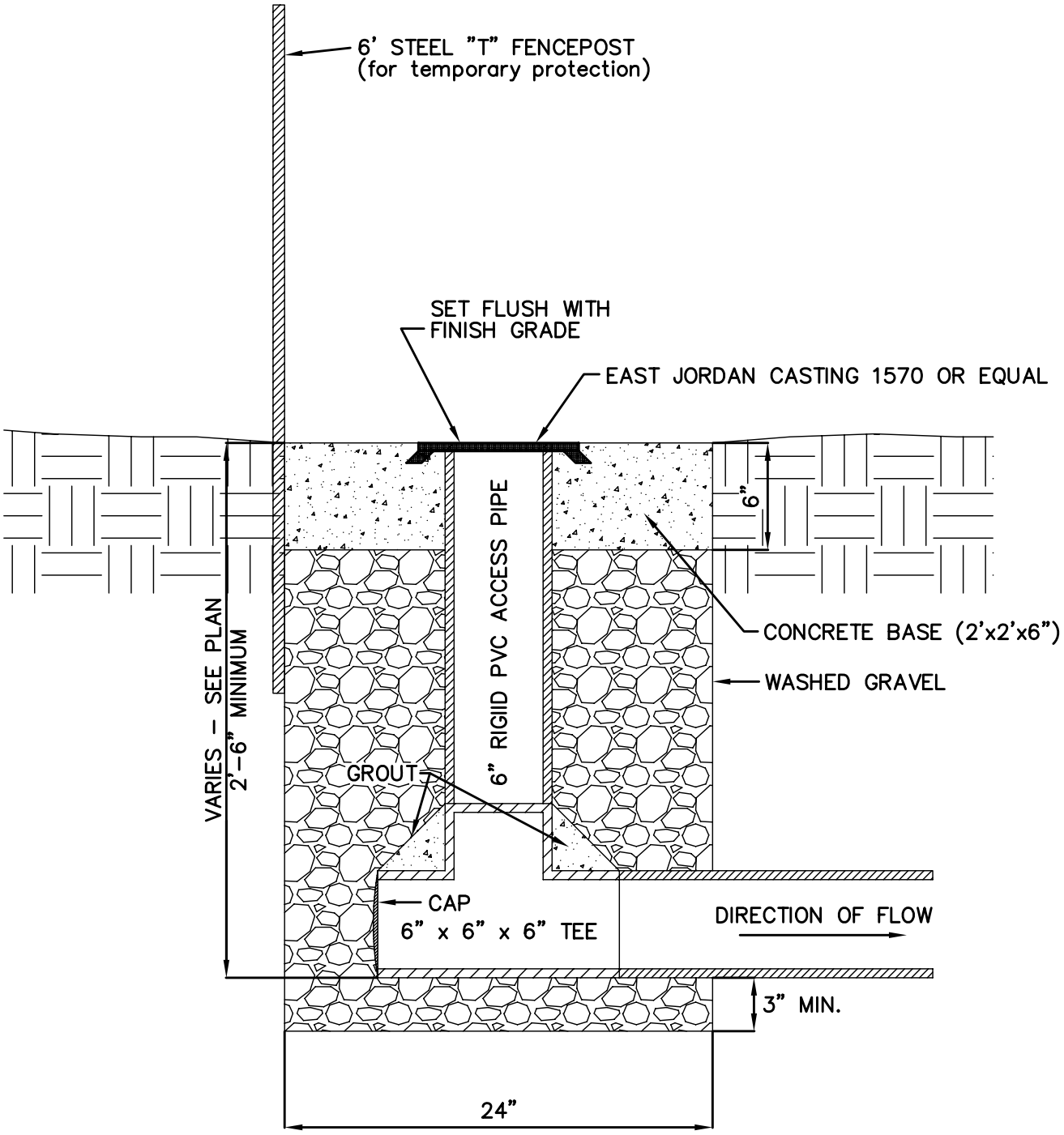

NOTE: MINIMUM 6" SUB SURFACE DRAIN
D= PIPE DIAMETER

NOTE: TILE SHALL BE DOUBLE WALL SMOOTH WALL PERFORATED HDPE PIPE.

SUBSURFACE DRAIN (SSD) RISER DETAIL

Westfield PUBLIC WORKS Parks • Utilities • Streets

RENEE LYNN GOFF REGISTERED No. 10403860 STATE OF INDIANA PROFESSIONAL ENGINEER

TOWN OF WESTFIELD, INDIANA

Renée Lynn Goff 4/10/06
DATE

FIGURE ST-37

SINGLE LINE

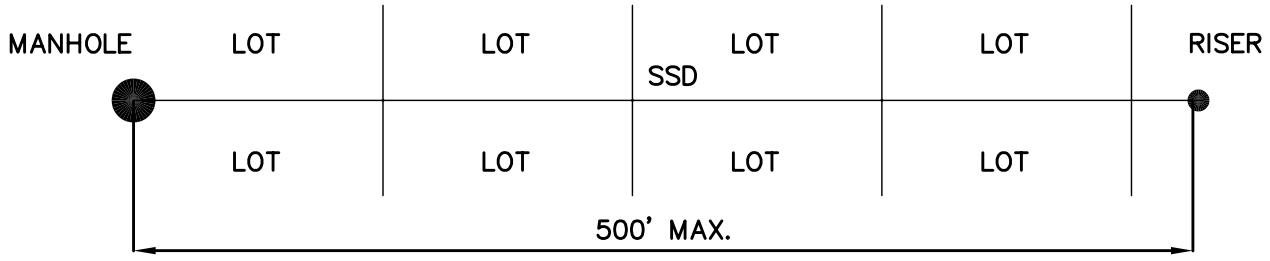

INTERSECTION OF TWO SSD LINES

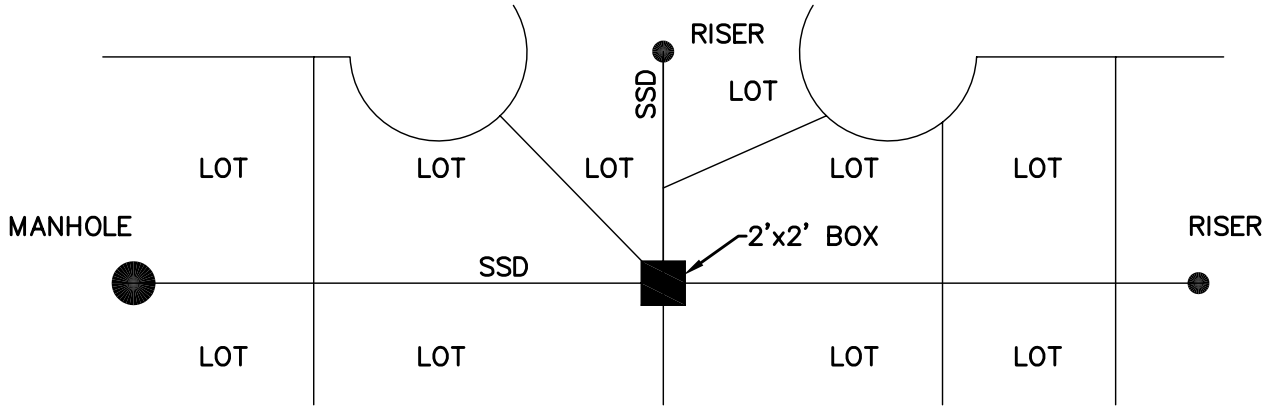

INTERSECTION OF THREE OR MORE SSD LINES

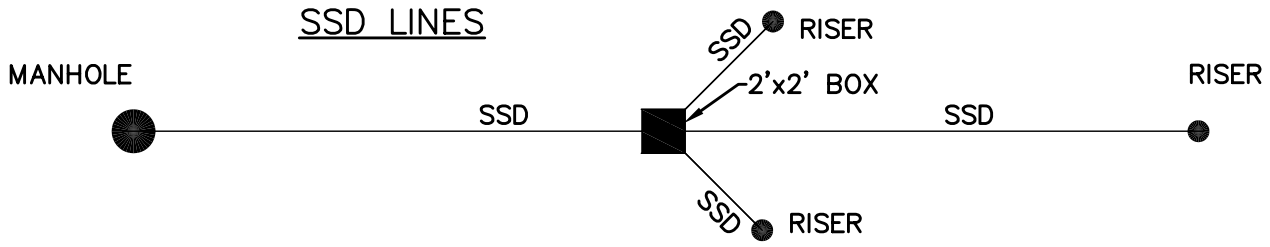

END OF SSD RUN

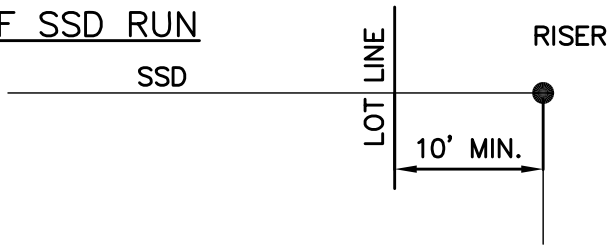

RISER LOCATIONS

Westfield PUBLIC WORKS Parks • Utilities • Streets

RENEE LYNN GOFF REGISTERED No. 10403860 STATE OF INDIANA PROFESSIONAL ENGINEER

TOWN OF WESTFIELD, INDIANA

Renée Lynn Goff 4/10/06
DATE

FIGURE ST-38

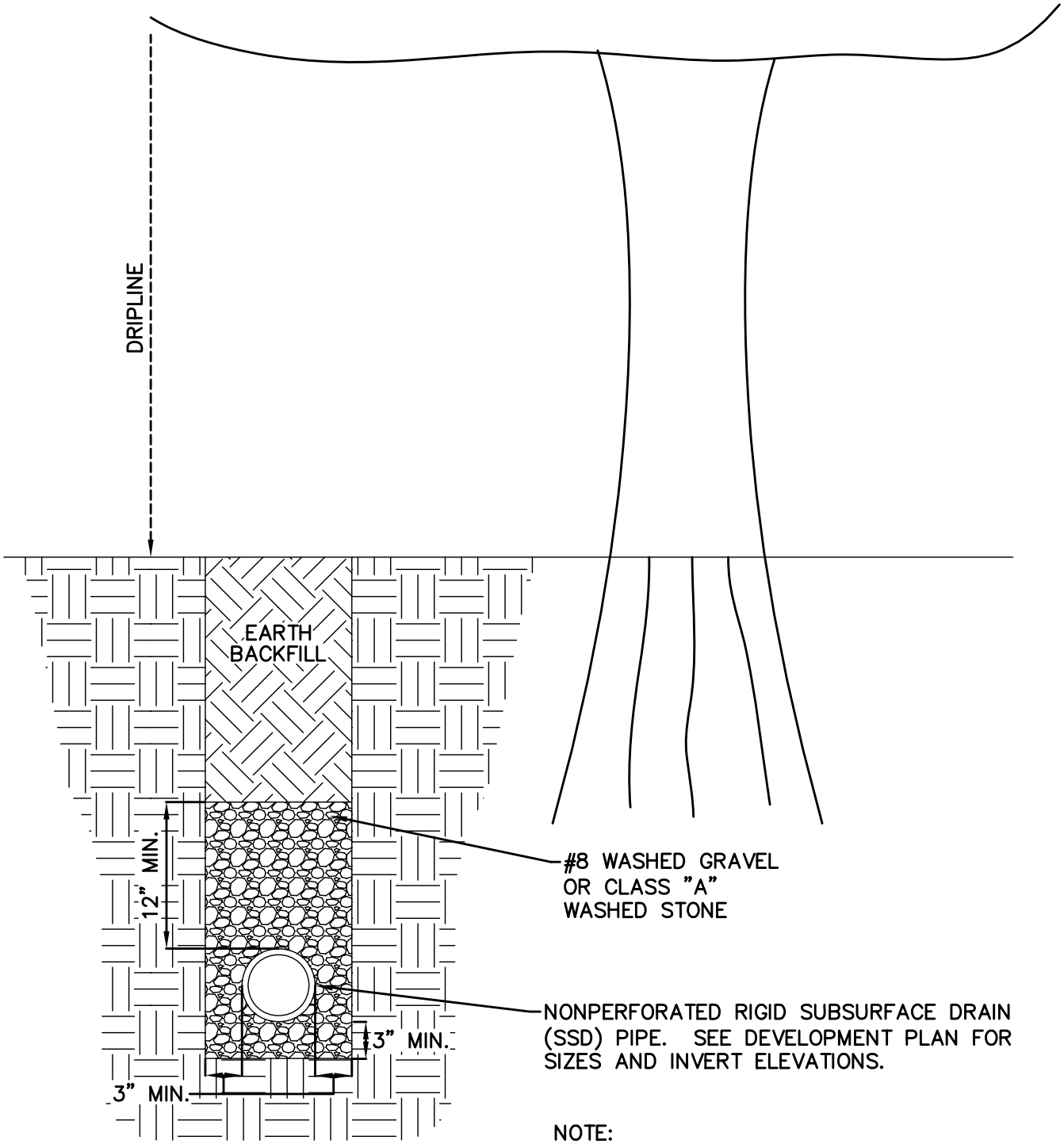

NOTE:
TILE SHALL BE DOUBLE WALL, SMOOTH WALL NONPERFORATED PLASTIC OR HDPE PIPE.

SUBSURFACE DRAIN (SSD) DETAIL WHEN WITHIN DRIPLINE OF EXISTING TREES

Westfield PUBLIC WORKS Parks • Utilities • Streets

RENEE LYNN GOFF REGISTERED No. 10403860 STATE OF INDIANA PROFESSIONAL ENGINEER

TOWN OF WESTFIELD, INDIANA

Renée Lynn Goff 4/10/06
DATE

FIGURE ST–39

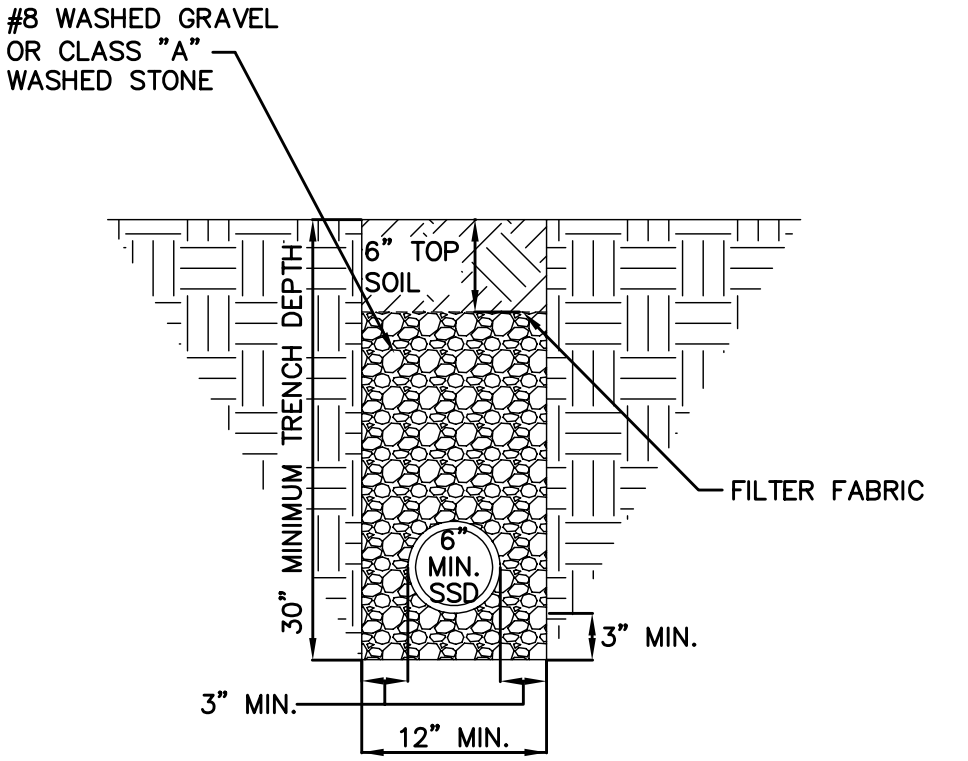

NOTE:
TILE SHALL BE DOUBLE WALL, SMOOTH WALL PERFORATED HDPE PIPE.

SUBSURFACE DRAIN (SSD) DETAIL
NO SWALE

Westfield PUBLIC WORKS Parks • Utilities • Streets

RENEE LYNN GOFF REGISTERED No. 10403860 STATE OF INDIANA PROFESSIONAL ENGINEER

TOWN OF WESTFIELD, INDIANA

Renée Lynn Goff 4/10/06
DATE

FIGURE ST–40

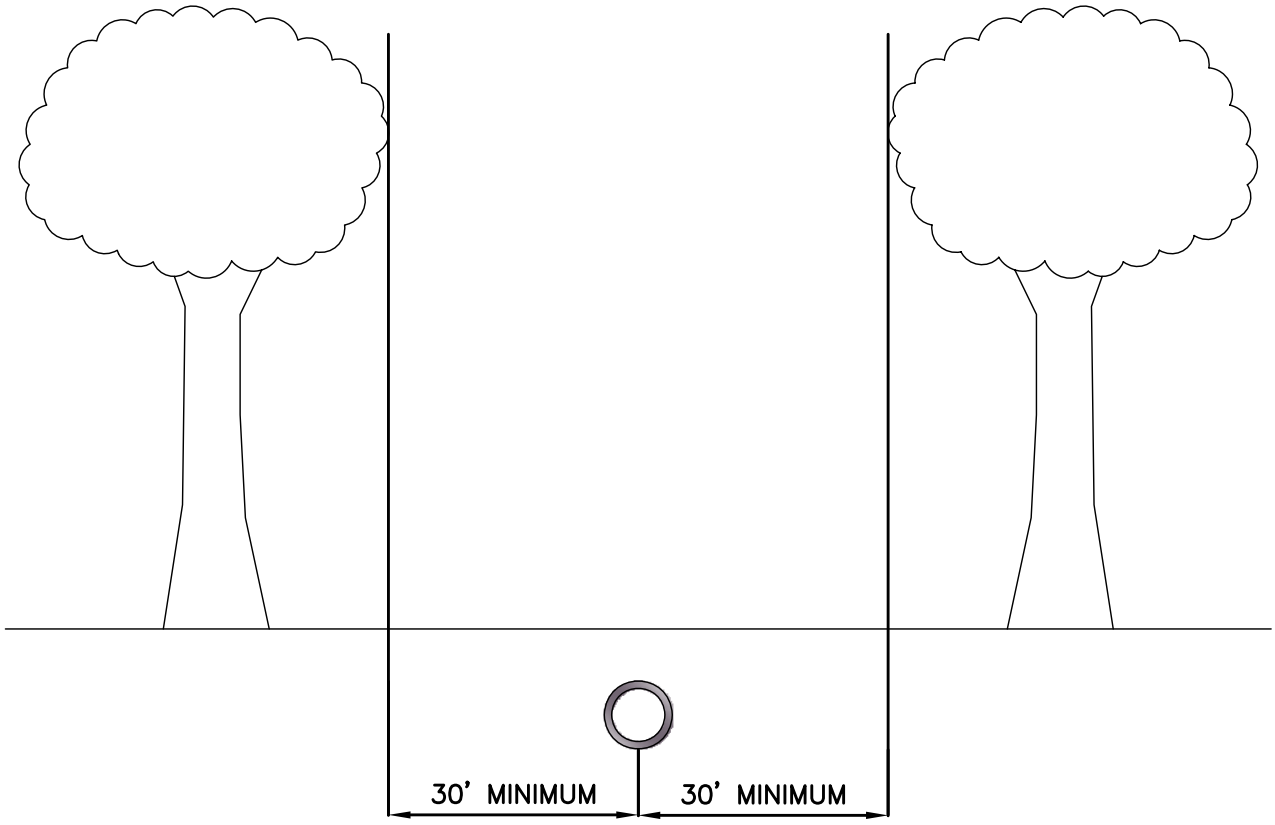

TILE CLEARING THROUGH WOODS

Westfield PUBLIC WORKS Parks • Utilities • Streets

RENEE LYNN GOFF REGISTERED No. 10403860 STATE OF INDIANA PROFESSIONAL ENGINEER

TOWN OF WESTFIELD, INDIANA

Renée Lynn Goff 4/10/06
DATE

FIGURE ST–41

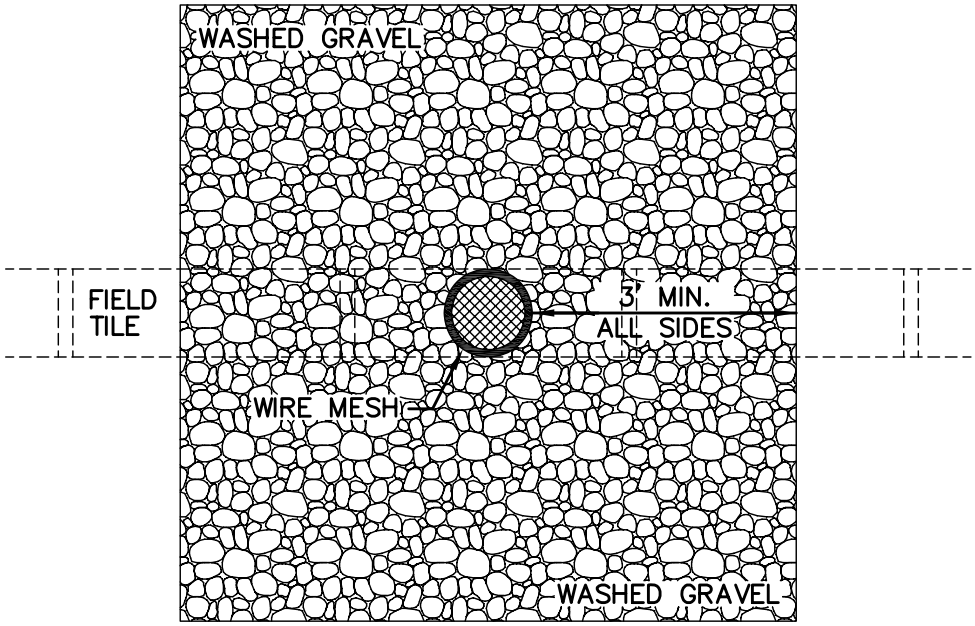

TOP VIEW

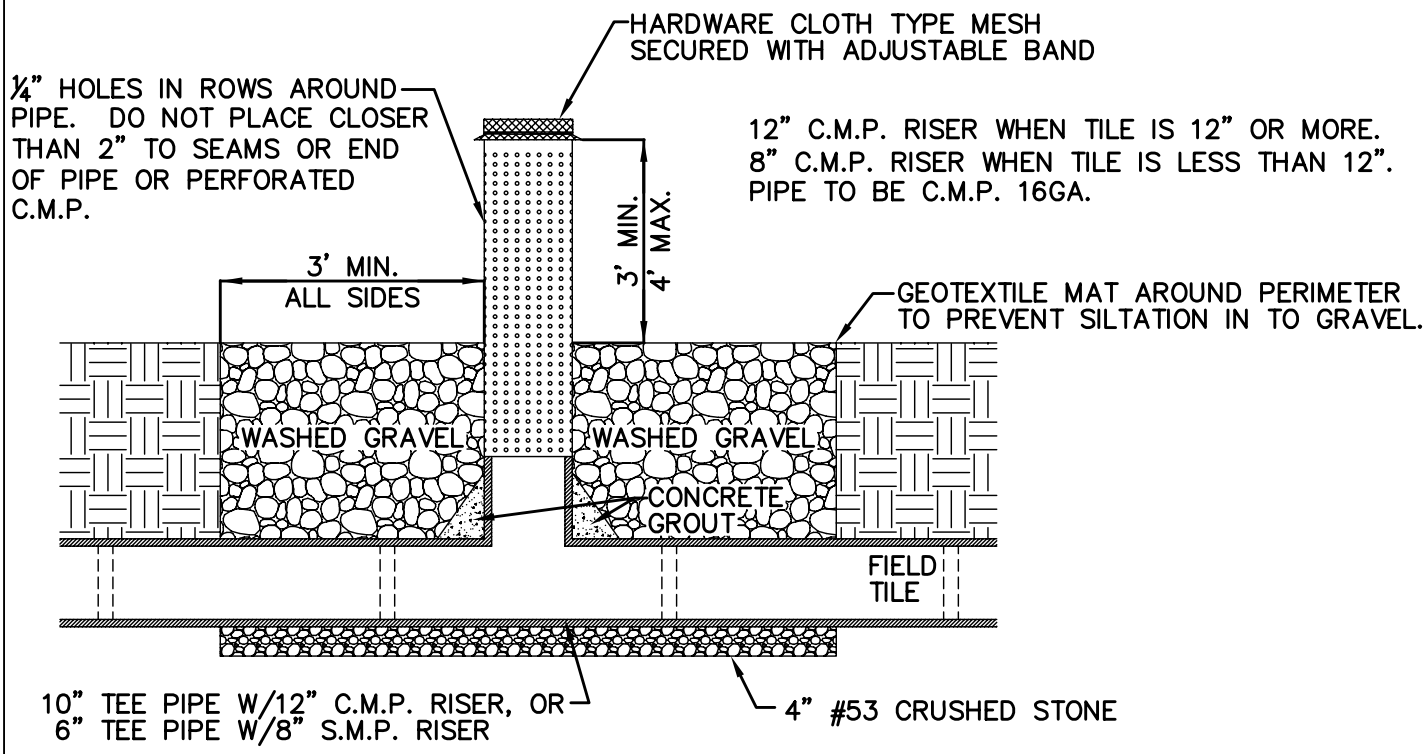

CROSS SECTION

SLOTTED RISER INLET DETAILS

Westfield PUBLIC WORKS Parks • Utilities • Streets

RENEE LYNN GOFF REGISTERED No. 10403860 STATE OF INDIANA PROFESSIONAL ENGINEER

TOWN OF WESTFIELD, INDIANA

Renée Lynn Goff 4/10/06
DATE

FIGURE ST-42

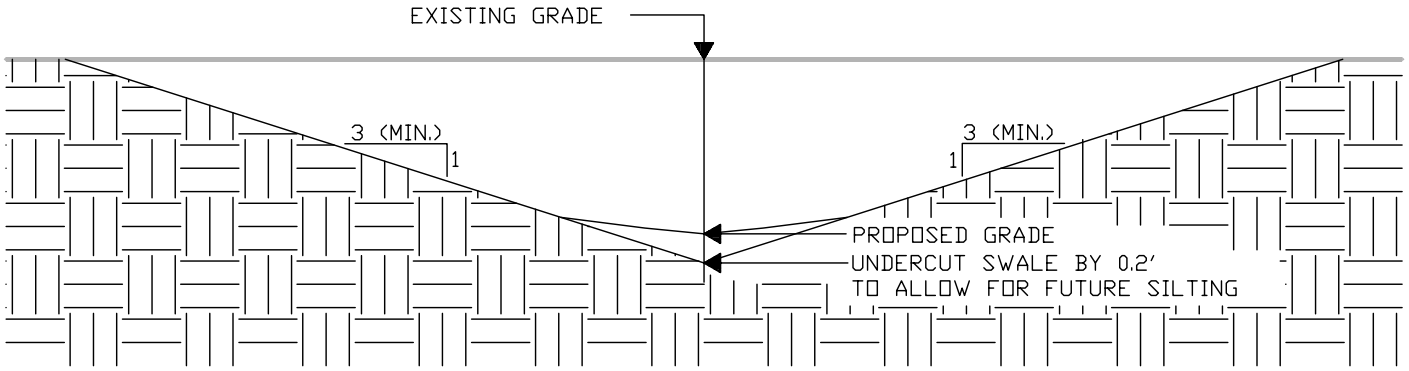

UNDERDRAINS REQUIRED IN SWALES WITH SLOPE BETWEEN 1% & 2% GRADIENT

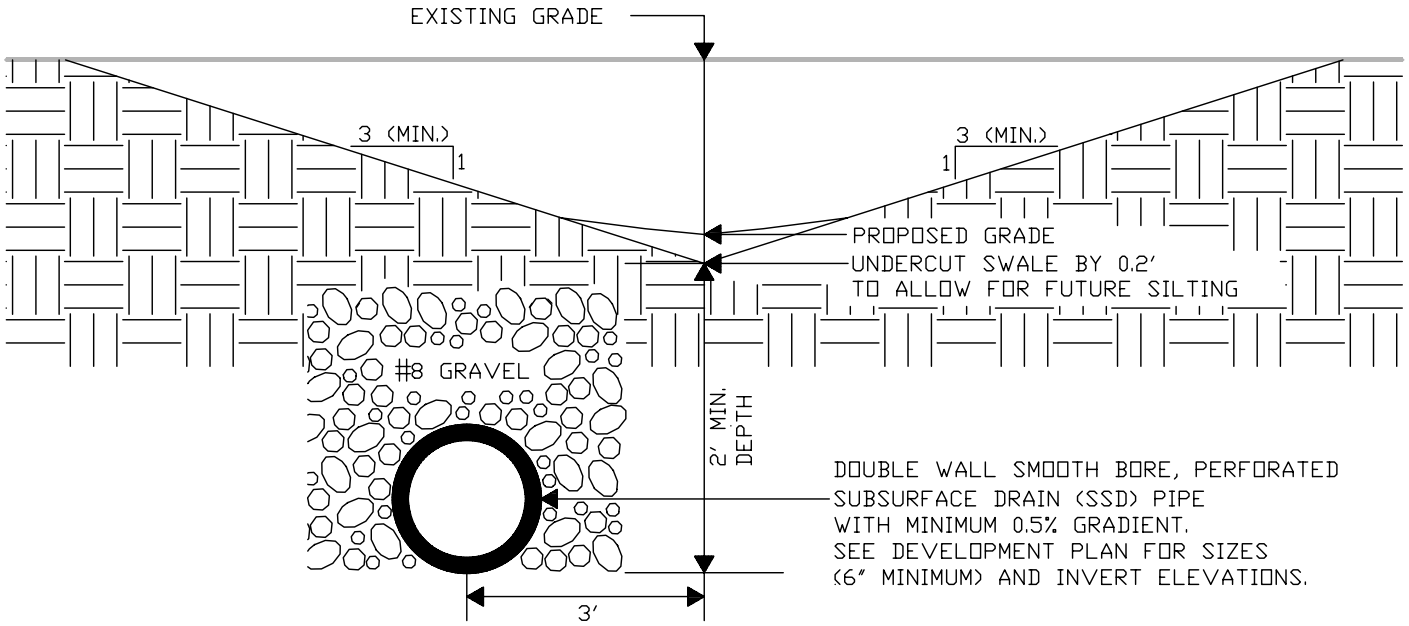

MINIMUM CHANNEL SLOPE 1% GRADIENT

(DRAWING NOT TO SCALE)

TYPICAL SWALE DETAIL

Westfield PUBLIC WORKS Parks • Utilities • Streets

RENEE LYNN GOFF REGISTERED No. 10403860 STATE OF INDIANA PROFESSIONAL ENGINEER

TOWN OF WESTFIELD, INDIANA

Renée Lynn Goff 4/10/06
DATE

FIGURE ST-43

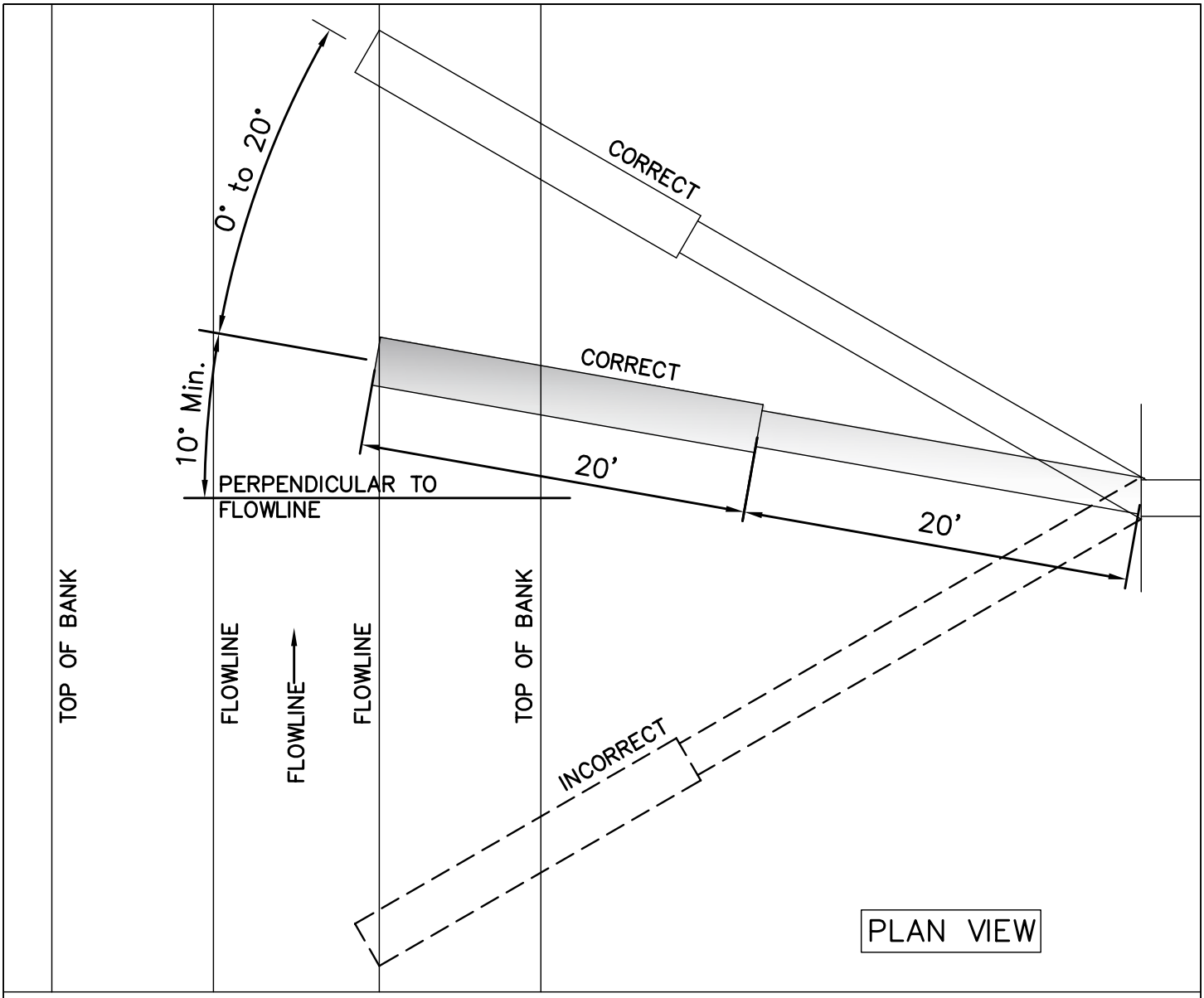

PROFILE VIEW

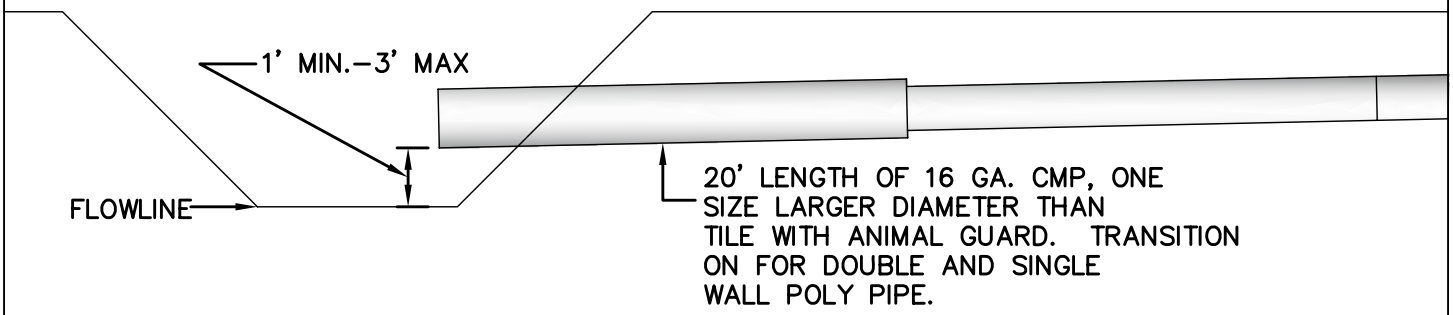

DRAIN OUTLET DETAIL #1

Westfield PUBLIC WORKS Parks • Utilities • Streets

RENEE LYNN GOFF REGISTERED No. 10403860 STATE OF INDIANA PROFESSIONAL ENGINEER

TOWN OF WESTFIELD, INDIANA

Renée Lynn Goff 4/10/06
DATE

FIGURE ST–44

FLAP TYPE ANIMAL GUARD DETAIL

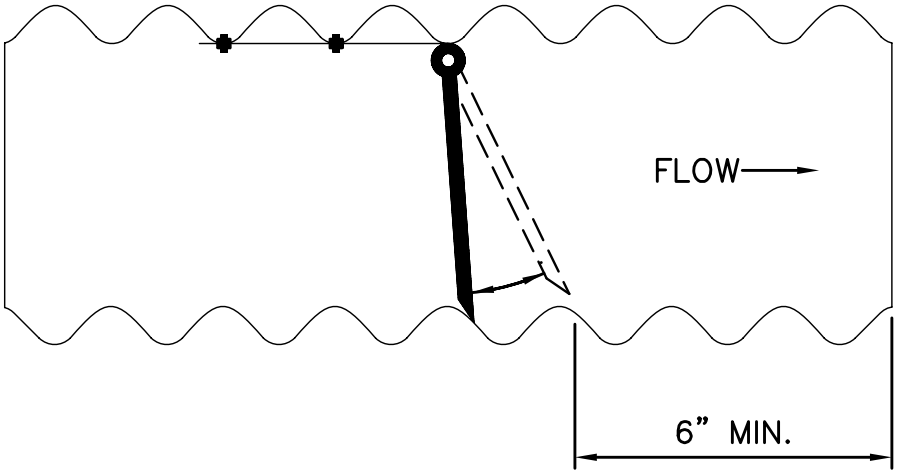

SECTION ON ℄ SHOWING DETAIL OF JOINT FOR DRAIN TILE AND CMP PIPE

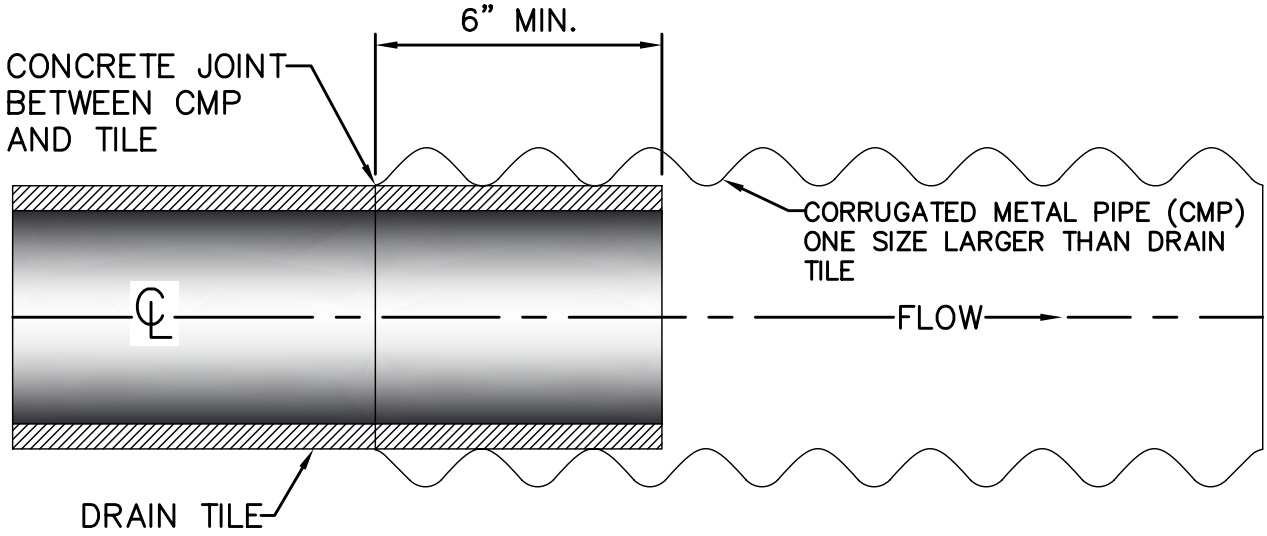

DRAIN OUTLET DETAIL #2

Westfield PUBLIC WORKS Parks • Utilities • Streets

RENEE LYNN GOFF REGISTERED No. 10403860 STATE OF INDIANA PROFESSIONAL ENGINEER

TOWN OF WESTFIELD, INDIANA

Renée Lynn Goff 4/10/06
DATE

FIGURE ST-45

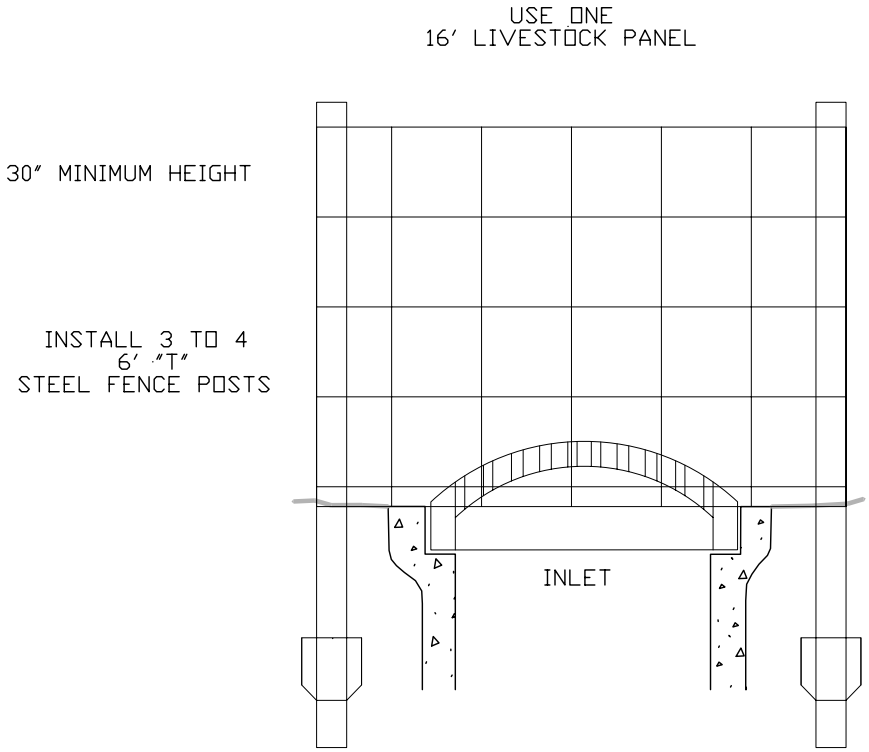

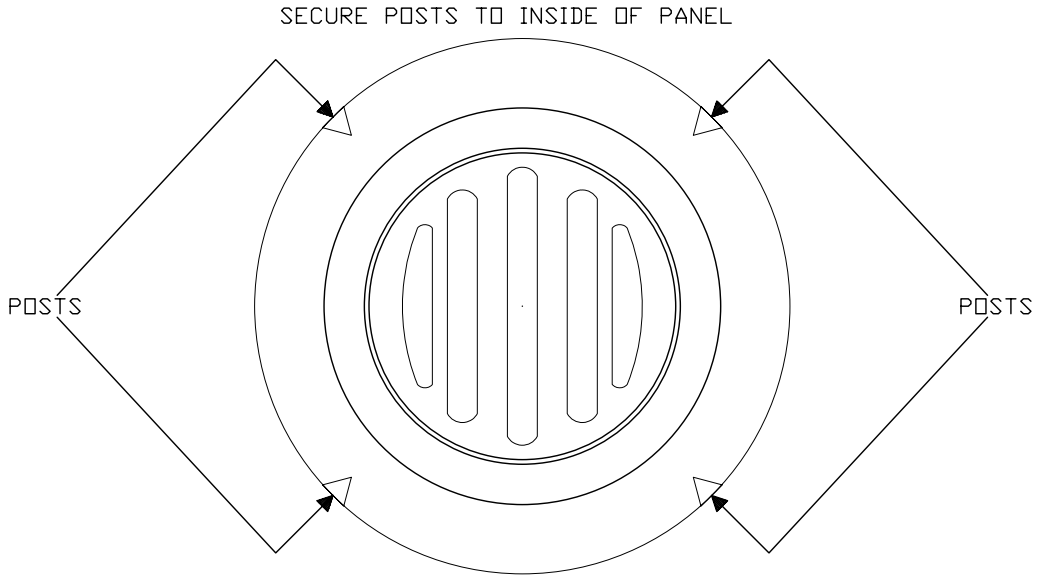

(DRAWING NOT TO SCALE)

INLET TRASH/DEBRIS GUARD

Westfield PUBLIC WORKS Parks • Utilities • Streets

RENEE LYNN GOFF REGISTERED No. 10403860 STATE OF INDIANA PROFESSIONAL ENGINEER

TOWN OF WESTFIELD, INDIANA

Renée Lynn Goff 4/10/06
DATE

FIGURE EC-1

GENERAL NOTES

1. PREPARE SOIL BEFORE INSTALLING BLANKETS, INCLUDING APPLICATION OF LIME, FERTILIZER AND SEED.
2. BEGIN AT THE TOP OF THE CHANNEL BY ANCHORING THE BLANKET IN A 6" DEEP x 6" WIDE TRENCH. BACKFILL AND COMPACT THE TRENCH AFTER STAPLING.
3. ROLL CENTER BLANKET IN DIRECTION OF WATER FLOW ON BOTTOM OF CHANNEL.
4. PLACE BLANKETS END OVER END (SHINGLE STYLE) WITH A 6" OVERLAP. USE A DOUBLE ROW OF STAGGERED STAPLES 4" APART TO SECURE BLANKETS.
5. FULL LENGTH EDGE OF BLANKETS AT TOP OF SIDE SLOPES MUST BE ANCHORED IN 6" DEEP x 6" WIDE TRENCH. BACKFILL AND COMPACT THE TRENCH AFTER STAPLING.
6. BLANKETS ON SIDE SLOPES MUST BE OVERLAPPED 4" OVER THE CENTER BLANKET AND STAPLED.
7. IN MEDIUM/HIGH FLOW CHANNEL APP-LICATIONS, A STAPLE CHECK SLOT IS RECOMMENDED AT 30 TO 40 FOOT INTERVALS. USE A ROW OF STAPLES 4" APART OVER ENTIRE WIDTH OF THE CHANNEL. PLACE A SECOND ROW 4" BELOW THE FIRST ROW IN A STAGGERED PATTERN.
8. THE TERMINAL END OF THE BLANKETS MUST BE ANCHORED IN A 6" DEEP x 6" WIDE TRENCH. BACKFILL AND COMPACT THE TRENCH AFTER STAPLING.

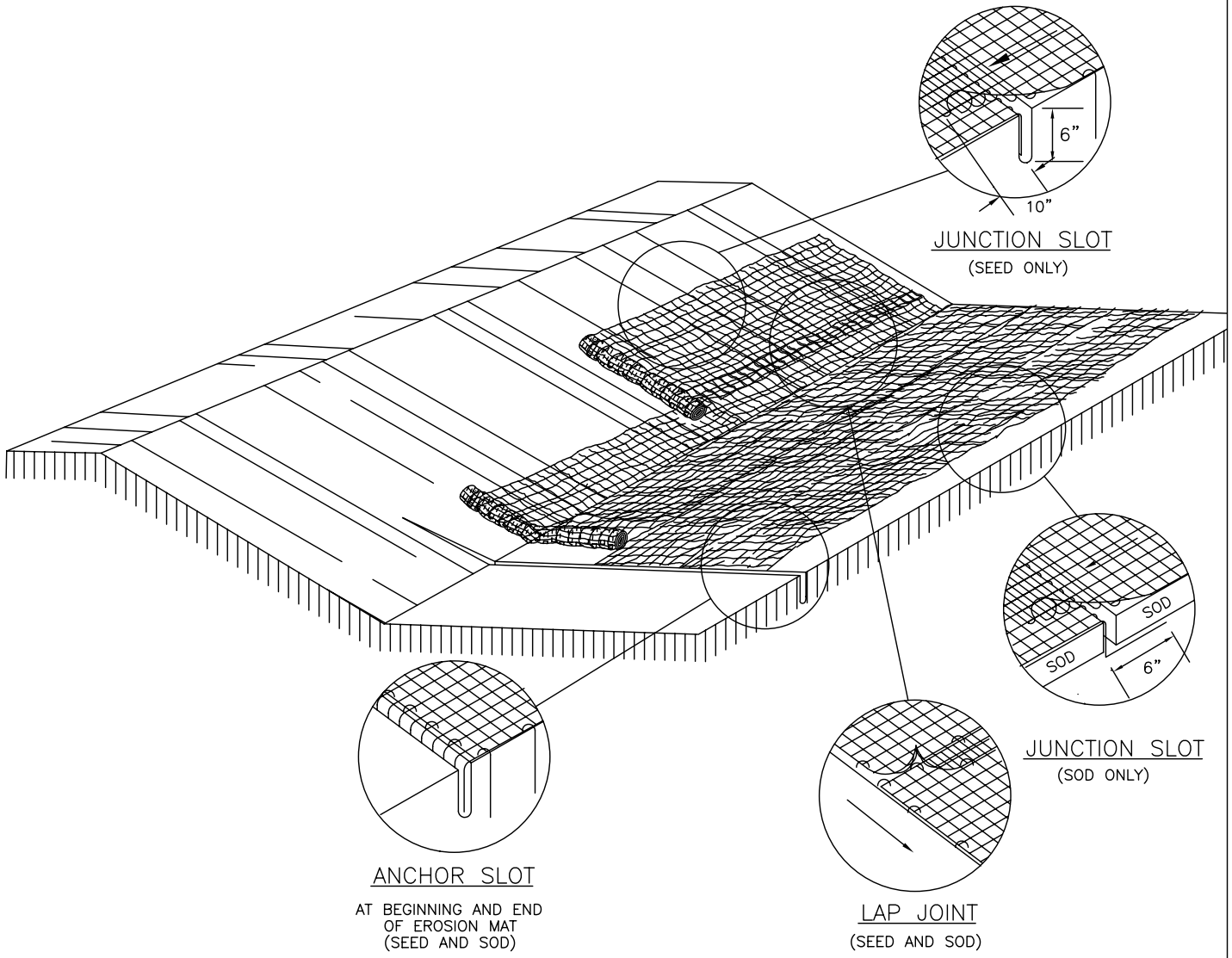

EROSION CONTROL MAT – SLOPE DETAIL

Westfield PUBLIC WORKS Parks • Utilities • Streets

RENEE LYNN GOFF REGISTERED No. 10403860 STATE OF INDIANA PROFESSIONAL ENGINEER

TOWN OF WESTFIELD, INDIANA

Renée Lynn Goff 4/10/06
DATE

FIGURE EC-2

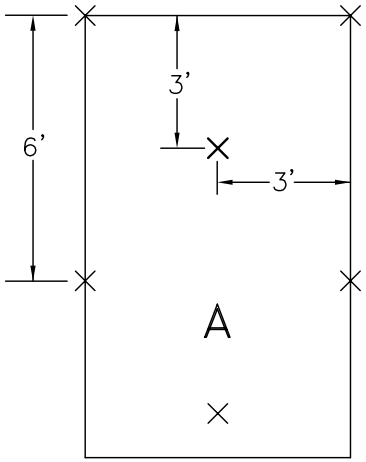

1 STAPLE PER SQ. YD.

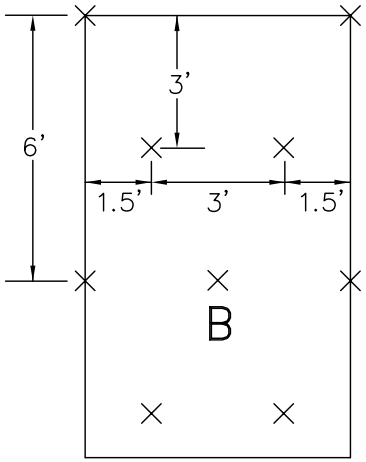

1.5 STAPLES PER SQ. YD.

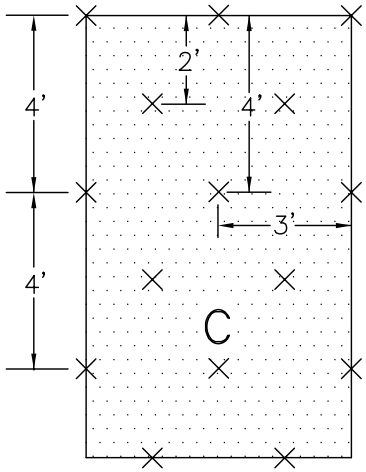

2 STAPLES PER SQ. YD.

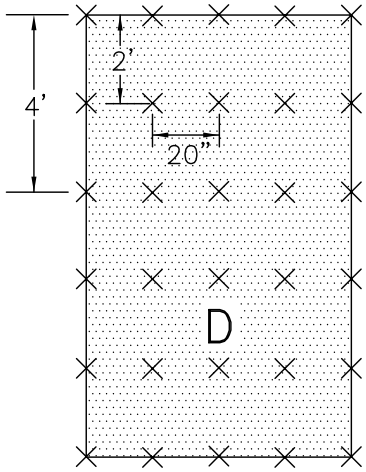

3.5 STAPLES PER SQ. YD.

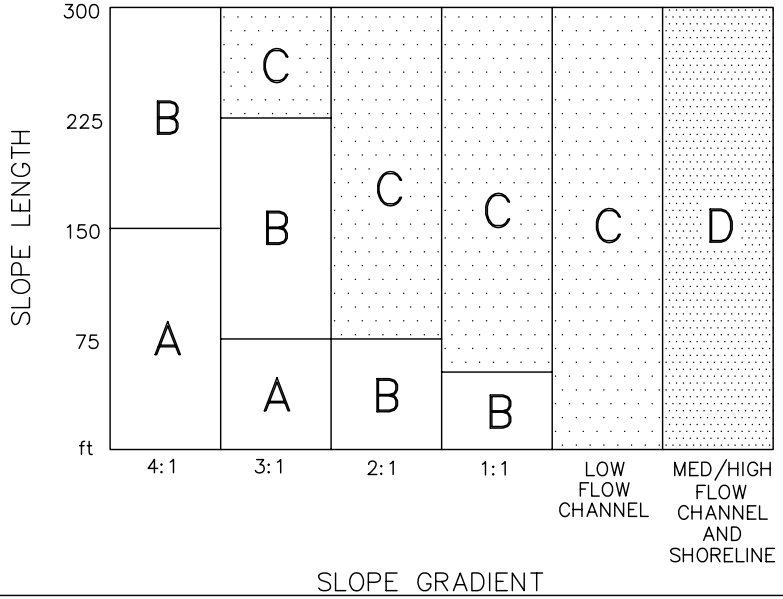

EROSION CONTROL MAT – STAPLE GUIDE

Westfield PUBLIC WORKS Parks • Utilities • Streets

RENEE LYNN GOFF REGISTERED No. 10403860 STATE OF INDIANA PROFESSIONAL ENGINEER

TOWN OF WESTFIELD, INDIANA

Renée Lynn Goff 4/10/06
DATE

FIGURE EC–3

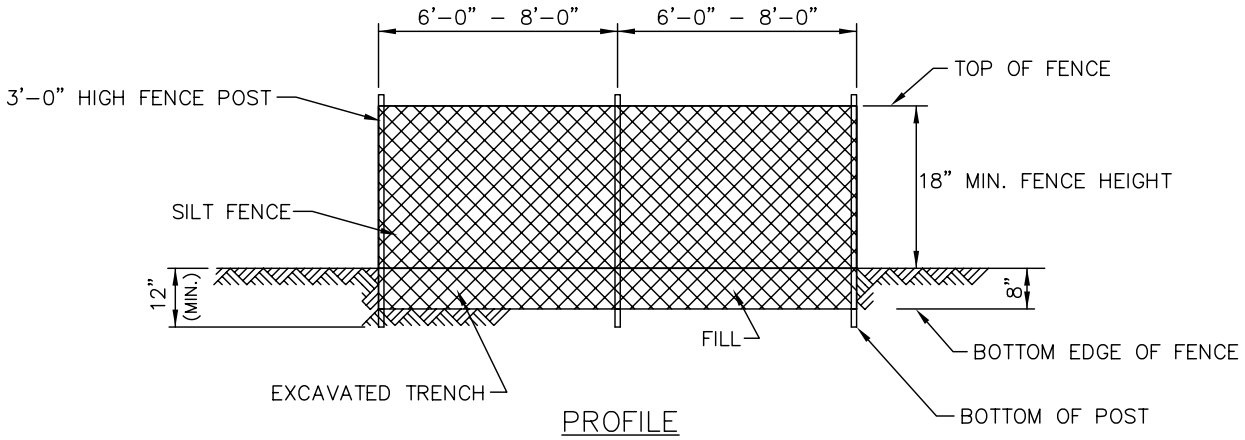

PROFILE

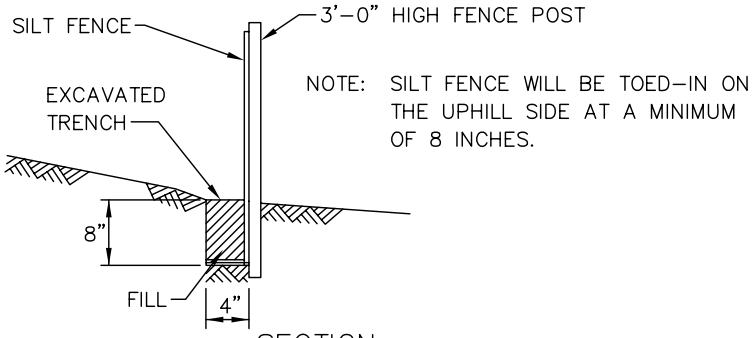

NOTE: SILT FENCE WILL BE TOED–IN ON THE UPHILL SIDE AT A MINIMUM OF 8 INCHES.

SECTION

INSTALLATION PROCEDURE

1. 2" x 2" X 36" HARDWOOD OR STEEL FENCE POSTS ARE INSTALLED 6' APART (w/ EXTRA STRENGTH FABRIC WITHOUT WIRE BACKING) OR 8' APART (w/ WIRE BACKING), ON A SLIGHT ANGLE TOWARD THE ANTICIPATED RUNOFF SOURCE.

2. A TRENCH 4" WIDE BY 8" DEEP IS DUG ALONG THE UPHILL SIDE OF THE FENCE LINE.

3. THE SILT FENCE IS UNROLLED AND LAID OUT ALONG THE FENCE LINE.

4. A BUILT–IN ATTACHMENT CORD RUNS THROUGHOUT THE FULL LENGTH OF EACH 150 LINEAR FOOT ROLL. ONE END OF THE ROLL HAS APPROXIMATELY 5' OF CORD. THE OTHER END HAS APPROXIMATELY 20' OF CORD. THE END WITH 5' OF CORD IS WRAPPED AROUND THE FIRST POST AND SECURED.

5. THE FENCE IS PULLED TO THE NEXT POST AND A 1.5" SLIT IS MADE IN THE HEM DIRECTLY ABOVE THE CORD. THE CORD IS PULLED OUT OF THE HEM AND PULLED TAUT FROM THE PRECEDING POST AND WRAPPED TWICE AROUND THE POST.

6. THE SLITTING OF THE HEM ON EACH POST IS REPEATED UNTIL THE FINAL POST IS REACHED, AT WHICH TIME THE MATERIAL IS WRAPPED AROUND THE LAST POST AND SECURED WITH THE ENCLOSED CORD.

7. AT THIS TIME THE LOWER 8" OF THE FENCE IS LAID IN THE TRENCH AND CURLED TOWARD THE EROSION SOURCE. THE TRENCH IS THEN BACKFILLED WITH SOIL.

SILT FENCE DETAIL

Westfield PUBLIC WORKS Parks • Utilities • Streets

RENEE LYNN GOFF REGISTERED No. 10403860 STATE OF INDIANA PROFESSIONAL ENGINEER

TOWN OF WESTFIELD, INDIANA

Renée Lynn Goff 4/10/06
DATE

FIGURE EC–4