CENTENNIAL SOUTH EXPANSION

SECONDARY PLAT
PART OF THE N.W. 1/4 OF THE S.W. 1/4, SECTION 15-T18N-R3E
HAMILTON COUNTY, INDIANA

THIS INSTRUMENT WAS PREPARED
BY ADAM J. BEERY
REGISTERED LAND SURVEYOR–INDIANA #20700069
THE SCHNEIDER CORPORATION
HISTORIC FORT HARRISON
8901 OTIS AVENUE
INDIANAPOLIS, INDIANA 46216–1037
TELEPHONE (317) 826–7100

ASSUMED NORTH
SCALE: 1" = 60'
30 0 30 60 120

Adam J. Beery Dated:_____
Registered Land Surveyor
Indiana #20700069

ADAM J. BEERY REGISTERED No. 20700069 STATE OF INDIANA LAND SURVEYOR

LEGEND
⊕ – INDICATES STREET CENTERLINE MONUMENTATION – SEE NOTE SHEET 9
⊠ – INDICATES CONCRETE MONUMENT – SEE NOTE SHEET 9
● – INDICATES 5/8" REBAR W/YELLOW CAP STAMPED "SCHNEIDER ENG FIRM #0001" UNLESS NOTED OTHERWISE
D.E. – DRAINAGE EASEMENT
D.U.&S.E. – DRAINAGE UTILITY AND SEWER EASEMENT
B.L. – BUILDING LINE
S.F. – SQUARE FOOTAGE
(NR) – NON–RADIAL
C.A. – COMMON AREA
D.S. – DEDICATED STREET EASEMENT

The Schneider Corporation
Historic Fort Harrison, 8901 Otis Avenue, Indianapolis, Indiana 46216–1037, 317–826–7100 Fax 317–826–7300
Engineering, Surveying, Landscape Architecture, GIS • LIS, Geology

PREPARED FOR:
ESTRIDGE DEVELOPMENT CO., INC.
14300 CLAY TERRACE BLVD. SUITE 200
CARMEL, INDIANA 46032

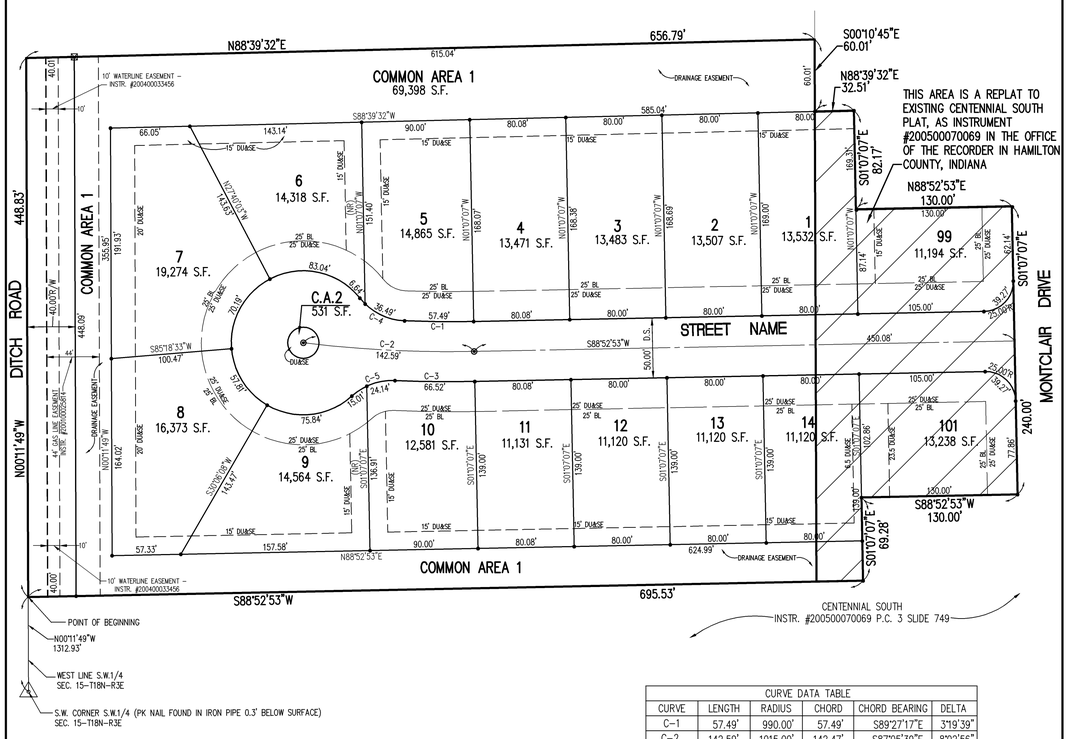

CURVE DATA TABLE					
CURVE	LENGTH	RADIUS	CHORD	CHORD BEARING	DELTA
C–1	57.49'	990.00'	57.49'	S89°27'17"E	3°19'39"
C–2	142.59'	1015.00'	142.47'	S87°05'39"E	8°02'56"
C–3	66.52'	1040.00'	66.51'	S89°17'11"E	3°39'52"
C–4	43.13'	50.00'	41.80'	S63°04'52"E	49°25'12"
C–5	39.15'	50.00'	38.16'	S70°06'56"W	44°51'40"

CENTENNIAL SOUTH EXPANSION

SECONDARY PLAT
PART OF THE N.W. 1/4 OF THE S.W. 1/4, SECTION 15-T18N-R3E
HAMILTON COUNTY, INDIANA

THIS INSTRUMENT WAS PREPARED
BY ADAM J. BEERY
REGISTERED LAND SURVEYOR–INDIANA #20700069
THE SCHNEIDER CORPORATION
HISTORIC FORT HARRISON
8901 OTIS AVENUE
INDIANAPOLIS, INDIANA 46216–1037
TELEPHONE (317) 826–7100

PREPARED FOR:
ESTRIDGE DEVELOPMENT CO., INC.
14300 CLAY TERRACE BLVD. SUITE 200
CARMEL, INDIANA 46032

The Schneider Corporation
Historic Fort Harrison, 8901 Otis Avenue, Indianapolis, Indiana 46216–1037, 317–826–7100 Fax 317–826–7300
Engineering, Surveying, Landscape Architecture, GIS • LIS, Geology

SURVEYOR'S CERTIFICATE

A part of the Southwest Quarter of Section 15, Township 18 North, Range 3 East, of the Second Principal Meridian, Hamilton County, Indiana, being more particularly described as follows:

Commencing at the Southwest Corner of said Southwest Quarter; thence North 00 degrees 11 minutes 49 seconds West along the west line of said Quarter a distance of 1312.93 feet to the Point of Beginning; thence North 00 degrees 11 minutes 49 seconds West along said west line a distance of 448.83 feet to the southwest corner of a tract of land described in Deed Book 312, Page 796 in the Office of the Recorder in Hamilton County, Indiana; thence North 88 degrees 39 minutes 32 seconds East along the south line of said tract a distance of 656.79 feet to the boundary of Centennial South, a residential subdivision, the plat of which is recorded as Instrument #200500070069 in the Office of the Recorder in Hamilton County, Indiana; thence South 00 degrees 10 minutes 45 seconds East along the boundary of Centennial South a distance of 60.01 feet; thence North 88 degrees 39 minutes 32 seconds East a distance of 32.51 feet; thence South 01 degree 07 minutes 07 seconds East a distance of 82.17 feet; thence North 88 degrees 52 minutes 53 seconds East a distance of 130.00 feet; thence South 01 degree 07 minutes 07 seconds East a distance of 240.00 feet, thence South 88 degrees 52 minutes 53 seconds West a distance of 130.00 feet; thence South 01 degree 07 minutes 07 seconds East a distance of 69.28 feet to the boundary of Centennial South; thence South 88 degrees 52 minutes 53 seconds West along the boundary of Centennial South a distance of 695.53 feet to the Point of Beginning, containing 7.82 acres, more or less.

This subdivision consists of 16 lots, numbered 1 through 14, 99 and 101 together with Common Areas 1 and 2, streets, easements and public ways as shown hereon.

The size of lots and common areas together with the widths of streets and easements are shown in figures denoting feet and decimal parts thereof.

Cross–reference is hereby made to survey plat recorded as Instrument #_____ in the office of the recorder of Hamilton County, Indiana.

I, the undersigned, hereby certify that I am a registered Land Surveyor, licensed in compliance with the laws of the State of Indiana and that the within plat represents a subdivision of lands surveyed within the cross–referenced survey plat, and that to the best of my knowledge and belief, there has been no change from the matters of survey revealed by the cross–referenced survey on any lines that are common with the new subdivision. I further certify that the said subdivision was platted under my direct supervision and control and is true and correct to the best of my knowledge and belief: Witness my signature this _____ day of _____ .

DETAIL OF THE SW 1/4 OF SEC. 15-T18N-R3E

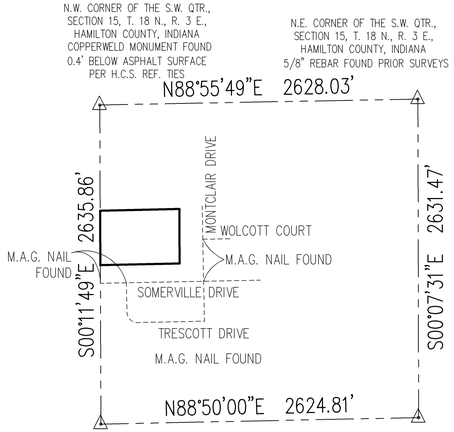

Adam J. Beery
Registered Land Surveyor
Indiana #20700069

STATE OF INDIANA)
) :SS
COUNTY OF MARION)

BEFORE ME, A NOTARY PUBLIC IN AND FOR SAID COUNTY AND STATE, PERSONALLY APPEARED THE ABOVE AND ACKNOWLEDGED THE EXECUTION OF THE FOREGOING INSTRUMENT AS HIS VOLUNTARY ACT AND DEED FOR THE USES AND PURPOSES THEREIN EXPRESSED.

WITNESS MY SIGNATURE AND NOTARIAL SEAL THIS _____ DAY OF_____ .

NOTARY PUBLIC_____ (PRINTED NAME) – _____

COUNTY OF RESIDENCE_____

MY COMMISSION EXPIRES _____

NOTE
SUBDIVISION MONUMENTS ARE REQUIRED PER TITLE 865 (STATE BOARD OF REGISTRATION FOR LAND SURVEYORS) IAC 1–12–18.

STREET CENTERLINE MONUMENTS SHALL BE 5/8" DIA. SHAFT METAL ROD W/ 1 1/2" DIA. CAP STAMPED "SCHNEIDER FIRM NO. 0001".

SUBDIVISION BOUNDARY MONUMENTS SHALL BE 4"X4"X36" CONCRETE MONUMENTS WITH CUT CROSS ON TOP.

LOT CORNER MONUMENTS SHALL BE 5/8" X 30" METAL ROD W/CAP STAMPED "SCHNEIDER ENG FIRM 0001".

UNLESS OTHERWISE REQUIRED BY LOCAL ORDINANCE, THE INSTALLATION OF AFOREMENTIONED MONUMENTS MAY BE DELAYED FOR UP TO TWO YEARS FROM RECORDATION OF THE PLAT PER STANDARDS AS SET FORTH IN TITLE 865 IAC 1–12–18 SUBSECTION (b)(1)(2).

DEDICATION CERTIFICATE

THE UNDERSIGNED, OWNERS OF THE REAL ESTATE SHOWN AND DESCRIBED HEREIN AND RECORDED IN THE OFFICE OF THE RECORDER OF HAMILTON COUNTY, INDIANA, DO HEREBY CERTIFY THAT WE HAVE LAID OFF, PLATTED, AND SUBDIVIDED AND DO HEREBY LAYOFF, PLAT AND SUBDIVIDE SAID REAL ESTATE IN ACCORDANCE WITH THE WITHIN PLAT.

THIS SUBDIVISION SHALL BE KNOWN AND DESIGNATED AS CENTENNIAL SOUTH EXPANSION AN ADDITION IN HAMILTON COUNTY, INDIANA.

The real estate described within this plat is hereby platted, subdivided and made subject to these plat covenants, conditions and restrictions and is further subject to the terms, definitions and conditions of a certain declaration of covenants, conditions and restrictions recorded as Instrument Number _____ dated _____ in the Office of the Recorder of Hamilton County, Indiana.

Witness our hands this _____ day of _____

BCE ASSOCIATES II, LLC
By: _____
Michael J. Keller, CFO

ACCESS ENTITY
By: _____
Michael J. Keller, Manager

BEFORE ME THE UNDERSIGNED NOTARY PUBLIC IN AND FOR SAID COUNTY AND STATE, PERSONALLY APPEARED THE ABOVE AND ACKNOWLEDGED EXECUTING THE FOREGOING RECORD PLAT.

WITNESS MY HAND AND NOTARIAL SEAL THIS _____ DAY OF _____.

_____ PRINTED NAME_____
NOTARY PUBLIC

MY COMMISSION EXPIRES: _____

COUNTY OF RESIDENCE: _____

CERTIFICATE OF PLAN COMMISSION

PLAN COMMISSION:
UNDER AUTHORITY PROVIDED BY IC 36–7, ENACTED BY THE GENERAL ASSEMBLY OF THE STATE OF INDIANA, AND ALL ACTS AMENDATORY THERETO, AND AN ORDINANCE ADOPTED BY THE TOWN COUNCIL OF THE TOWN OF WESTFIELD AS FOLLOWS:

APPROVED BY THE WESTFIELD–WASHINGTON TOWNSHIP PLAN COMMISSION AT A MEETING HELD _____.

WESTFIELD–WASHINGTON TOWNSHIP PLAN COMMISSION

_____
_____, SECRETARY

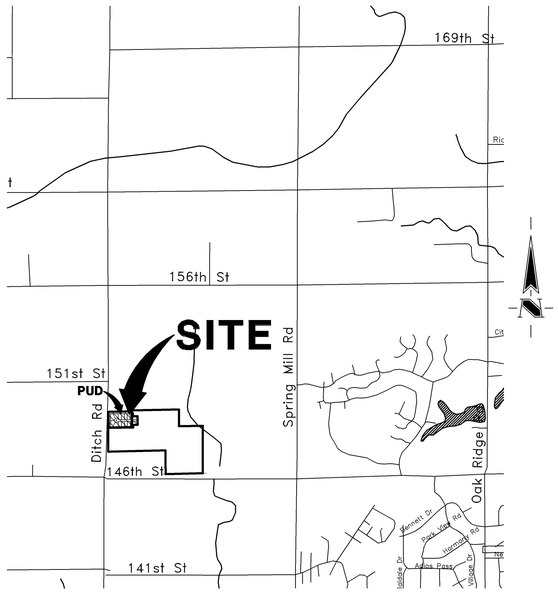

AREA MAP
SCALE: 1"=2000'

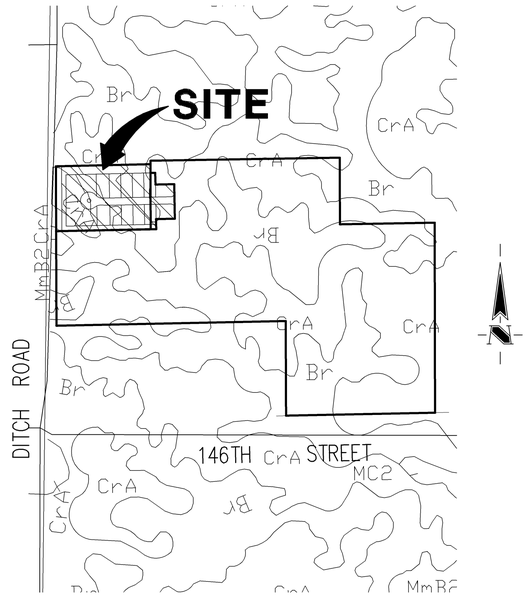

SOILS MAP
SCALE: 1"=500'

SITE MAP
SCALE: 1"=100'

— SEC. 15—T18N—R3E —

CENTENNIAL SOUTH EXPANSION

(CONSTRUCTION PLANS)

HAMILTON COUNTY
WESTFIELD, INDIANA

DEVELOPER:

ESTRIDGE DEVELOPMENT CO., INC.
14300 CLAY TERRACE BLVD. SUITE 200
CARMEL, INDIANA 46032
(317) 582-2456

INDEX	
SHEET No.	**DESCRIPTION**
C100	COVER SHEET
D101	DEMOLITION PLAN
C101	DEVELOPMENT PLAN
C102	STORMWATER POLLUTION PREVENTION PLAN
C201	STREET PLAN & PROFILE
C301	CUL—DE—SAC & INTERSECTION DETAILS
C302	TRAFFIC CONTROL PLAN
C401	SANITARY SEWER PLAN
C601	STORM SEWER PLAN
C701	WATER DISTRIBUTION PLAN
C702	WATER DETAILS
C801, C802	STORMWATER POLLUTION PREVENTION DETAILS
C803—C805	GENERAL DETAILS
C901—C905	SPECIFICATIONS
L101	LANDSCAPE PLAN
L801	LANDSCAPE DETAILS
L901	LANDSCAPE SPECIFICATIONS

Schneider

Historic Fort Harrison
8901 Otis Avenue
Indianapolis, Indiana
46216-1037
317-826-7100
317-826-7200 Fax
www.schneidercorp.com

Architecture
Civil Engineering
Environmental Engineering
Geotechnical Services
GIS * LIS
Home Builder Services
Interior Design
Land Surveying
Landscape Architecture
Transportation Engineering

REVISIONS:		
DATE:	BY:	DESCRIPTION:

PROJECT ENGINEER: JAR
CHECKED BY: JLF DATE CHECKED: 06/25/08

CERTIFIED BY: DAVID A. CLARK, P.E.
E-MAIL ADDRESS: dclark@schneidercorp.com

THIS DRAWING AND THE IDEAS, DESIGNS AND CONCEPTS CONTAINED HEREIN ARE THE EXCLUSIVE INTELLECTUAL PROPERTY OF THE SCHNEIDER CORPORATION AND ARE NOT TO BE USED OR REPRODUCED IN WHOLE OR IN PART, WITHOUT THE WRITTEN CONSENT OF THE SCHNEIDER CORPORATION.
© 2008, The Schneider Corporation

THESE DOCUMENTS ARE SUBJECT TO PERIODIC REVISIONS BY THE SCHNEIDER CORPORATION. THE HOLDER IS RESPONSIBLE FOR VERIFYING THAT THESE DOCUMENTS ARE THE MOST CURRENT PRIOR TO USE.

DAVID A. CLARK REGISTERED No. 19300219 STATE OF INDIANA PROFESSIONAL ENGINEER

DATE: 06/27/08

SHEET C100 OF 24

JOB No. (3915.004)

FILE NAME: R:\3915\004\DWGS\C100

R:\3k\3915\004\dwg\C100.dwg, 6/30/2008 12:39:27 PM, KIP 7004.pc3

LEGEND

- INLET OR CATCH BASIN
- SEWER MANHOLE
- TELEPHONE MANHOLE
- ACCESS COVER
- TRAFFIC MANHOLE
- WATER MANHOLE
- MANHOLE
- CLEANOUT
- AREA LIGHT
- UTILITY POLE WITH GUY WIRE
- UTILITY POLE WITH RISER
- FLAG POLE
- TRAFFIC POLE
- UTILITY PEDESTAL
- ELECTRIC METER
- ELECTRIC TRANSFORMER
- CONDITIONING UNIT
- UTILITY VALVE
- HYDRANT
- WELL
- WATER VALVE
- WATER METER
- GAS VALVE
- GAS METER
- SIGNS
- MAILBOX
- TREE, SHRUB
- BENCHMARK
- SOIL BORING
- OVERHEAD UTILITY LINES
- TV — UNDERGROUND TELEVISION
- E — UNDERGROUND ELECTRIC
- T — UNDERGROUND TELEPHONE
- FO — UNDERGROUND FIBER OPTIC
- F — UNDERGROUND FORCE MAIN
- G — UNDERGROUND GAS LINE
- W — UNDERGROUND WATER LINE
- S — SEWER LINE
- UNDERGROUND STORM SEWER
- UNDERGROUND SANITARY SEWER
- EDGE OF WOODS
- FENCE LINE
- FLOW LINE

BENCHMARK

BM – U.S.G.S. 93 RHP, BRASS DISK IN A CONCRETE POST AT THE SOUTHWEST CORNER OF 146TH STREET AND DITCH ROAD.
ELEVATION = 903.373 (NGVD 1929)

TBM2 – CUT SQUARE ON TOP OF CONCRETE BASE AT THE NORTH SIDE OF CONCRETE FENCE POST, WEST SIDE OF DITCH ROAD, 1320'± SOUTH OF 156TH STREET, ESTABLISHED FROM PREVIOUS JOB #753 (CENTENNIAL).
ELEVATION = 916.99 (NGVD 1929)

TBM4 – RAILROAD SPIKE SET 1.0' UP IN THE SOUTH SIDE OF A UTILITY POLE ON THE WEST SIDE OF DITCH ROAD, 267' NORTH OF THE SOUTHWEST CORNER AND 180' SOUTH OF THE NORTHWEST CORNER OF THE SUBJECT TRACT.
ELEVATION = 909.51 (NGVD 1929)

Utilities

Indiana Underground Utility Location Service (1–800–382–5544) was contacted on 29 NOV 04 for marking of utilities on 01 DEC 04 confirmation #0411292053, 0411292042 and 0411292023.

Sanitary Sewers
Westfield Utilities
2706 East 171st Street
Westfield, Indiana 46074
317–896–5577

Water
Westfield Utilities
2706 East 171st Street
Westfield, Indiana 46074
317–896–5577

Gas
Westfield Gas Corp.
606 West Park Street
Westfield, Indiana 46074
317–896–2581

Pipeline
Marathon Ashland Pipe Line LLC
9322 West 30th Street
Indianapolis, Indiana 46218
317–291–9460

Cable
Insight Cablevision
15229 Stoney Creek Way
Noblesville, Indiana 46060
317–776–0660

Telephone
At&t
220 North Meridian Street
Indianapolis, Indiana 46204
317–556–4000

Gas
Vectren Energy Delivery
P.O. Box 1700
Noblesville, Indiana 46061
317–776–5334

Cable
Bright House Networks
3030 Roosevelt Avenue
Indianapolis, Indiana 46218
317–632–2288

Pipeline
Buckeye Pipeline Company LP
9430 West 30th Street
Clermont, Indiana 46229
317–291–3121

Electric
Cinergy
1000 East Main Street
Plainfield, Indiana 46168
800–521–2232

Utility Hotline: within Indiana 1–800–382–5544 outside Indiana 1–800–428–5200
Note
The nature, size and location of utilities are per plans and locations provided by the respective utility companies. The above list constitutes some, if not all, of the utility companies which may provide service in the area of, and adjacent to, the subject project, based upon the information available through such plans and locations, and any incidental visual inspection. All utility companies should be notified prior to any excavation for field location of services and verification of size and nature of services.

HOLEY MOLEY SAYS
"DON'T DIG BLIND"

"IT'S THE LAW"
CALL 2 WORKING DAYS BEFORE YOU DIG
1-800-382-5544
CALL TOLL FREE
PER INDIANA STATE LAW IS–69–1991.
IT IS AGAINST THE LAW TO EXCAVATE WITHOUT NOTIFYING THE UNDERGROUND LOCATION SERVICE TWO (2) WORKING DAYS BEFORE COMMENCING WORK.

ASSUMED NORTH
SCALE: 1"=50'

KEY NOTES

- (A) REMOVE EXISTING FENCE
- (B) REMOVE EXISTING TREES. PROTECT EXISTING TREES THAT ARE NOT MARKED AS BEING REMOVED PER GENERAL NOTE 2 & 15.
- (C) LOCATE, IDENTIFY, DISCONNECT, AND SEAL OFF OR CAP OFF INDICATED UTILITIES SERVING BUILDING AND STRUCTURES TO BE DEMOLISHED
- (D) REMOVE EXISTING SIGN
- (E) REMOVE EXISTING PROPANE TANK
- (F) REMOVE EXISTING SWIMMING POOL

- EXISTING PAVEMENT TO BE REMOVED
- SIDEWALK/CONC. PADS TO BE REMOVED
- GRAVEL DRIVE TO BE REMOVED. REPLACE WITH TOPSOIL.
- DEMOLISH BUILDING AND FOUNDATION. DISPOSE OF LEGALLY OFFSITE.
- REMOVE EXISTING TREES AND BRUSH

GENERAL NOTES

1. REMOVAL OF EXISTING IMPROVEMENTS ARE AS NOTED ON THE PLANS. THE MATERIALS REMOVED FROM THE SITE SHALL BE DISPOSED OF IN A PROPER AND LEGAL MANNER PER FEDERAL, STATE, COUNTY, CITY, AND OR LOCAL LAWS AND ORDINANCES.
2. PROTECT EXISTING SITE IMPROVEMENTS, APURTENANCES, AND LANDSCAPING TO REMAIN. ERECT A PLAINLY VISIBLE FENCE AROUND DRIP LINE OF INDIVIDUAL TREES AND AROUND PERIMETER OF DRIP LINE OF GROUPS OF TREES TO REMAIN. PROVIDE PROTECTION TO ENSURE SAFE PASSAGE OF PEOPLE AROUND DEMOLITION AREA AND TO AND FROM OCCUPIED PORTIONS OF ADJACENT BUILDINGS & STRUCTURES.
3. THE CONTRACTOR SHALL VERIFY ALL DIMENSIONS AND ELEVATIONS IN THE FIELD PRIOR TO START OF CONSTRUCTION. THE CONTRACTOR SHALL BE RESPONSIBLE FOR ALL FIELD DIMENSIONS AND ELEVATIONS DURING THE ENTIRE CONSTRUCTION SCHEDULE. IF ANY DISCREPANCIES ARE FOUND IN THESE ENGINEERING PLANS OR LANDSCAPE PLANS FROM ACTUAL FIELD CONDITIONS, THE CONTRACTOR SHALL CONTACT THE PROJECT MANAGER IMMEDIATELY. IF ANY DISCREPANCIES FOUND ON THE SURVEY PLAN OR ACTUAL FIELD CONDITIONS, THE CONTRACTOR SHALL CONTACT THE PROJECT MANAGER IMMEDIATELY FOR INSTRUCTIONS.
4. ALL CONTRACTORS, BUT NOT LIMITED TO THE EXCAVATING CONTRACTOR OR CONTRACTORS, MUST TAKE PARTICULAR CARE WHEN EXCAVATING IN AND AROUND EXISTING UTILITY LINES AND EQUIPMENT. ACTUAL FIELD LOCATIONS OF ALL THE EXISTING UTILITIES ARE THE RESPONSIBILITY OF THE CONTRACTOR AND MUST BE LOCATED EITHER BY THE REPRESENTATIVE OF THE LOCAL UTILITY COMPANY OR BY A PRIVATE UNDERGROUND UTILITY LOCATION COMPANY PRIOR TO THE START OF EXCAVATION. VERIFY MINIMUM COVER REQUIREMENTS BY THE UTILITY CONTRACTOR OR CONTRACTORS, OR AGENCIES, WHICHEVER UTILITY COMPANY OR AGENCIES, THAT HAS JURISDICTION, SO NOT TO CAUSE DAMAGE.
5. IT IS THE RESPONSIBILITY OF THE CONTRACTOR TO NOTIFY ALL THE UTILITY COMPANIES AND FIRE DEPARTMENT 72 HOURS BEFORE CONSTRUCTION IS TO START TO VERIFY ANY UTILITIES THAT MAY BE PRESENT ON THE SITE. ALL VERIFICATIONS, LOCATIONS, SIZE, AND DEPTHS SHALL BE MADE BY THE APPROPRIATE UTILITY COMPANIES OR DEPARTMENTS. WHEN EXCAVATING AROUND OR OVER EXISTING UTILITIES, THE CONTRACTOR MUST NOTIFY THE UTILITY COMPANY SO A REPRESENTATIVE OF THE UTILITY CAN BE PRESENT DURING THE EXCAVATION TO INSTRUCT AND OBSERVE DURING THE EXCAVATION.
6. HEAVY CONSTRUCTION EQUIPMENT TRAFFIC MAY CREATE PUMPING AND GENERAL DETERIORATION OF THE SHALLOWER SOILS IF EXCESS SURFACE WATER IS PRESENT. PROPER PRECAUTIONARY STEPS MUST BE TAKEN DURING THE ENTIRE CONSTRUCTION SCHEDULE TO ALLEVIATE SUCH DAMAGE.
7. ALL CONSTRUCTION METHODS AND MATERIALS MUST CONFORM TO THE CURRENT STANDARDS AND SPECIFICATIONS OF THE FEDERAL, STATE, COUNTY, CITY, OR LOCAL REQUIREMENTS, WHICHEVER HAS JURISDICTION.
8. IT IS THE RESPONSIBILITY OF THE CONTRACTOR TO INSPECT EACH DAY AND REMOVE ALL MUD, DIRT, GRAVEL, AND LOOSE MATERIALS TRACKED, DUMPED, SPILLED OR WIND BLOWN FROM THE SITE ONTO OTHER SITES, RIGHT OF WAYS, PUBLIC OR PRIVATE STREETS OR ROADS, DRIVEWAYS, YARDS, OR SIDEWALKS. THE CONTRACTOR MUST CLEAN OR PICK UP DAILY IF NECESSARY. THE CONTRACTOR SHALL REDUCE THE AIRBORNE DUST DURING THE ENTIRE CONSTRUCTION SCHEDULE. WATER MAY BE USED AS A REDUCER.
9. THE UTILITIES INDICATED ON THESE PLANS AND ON THE SURVEY MAY NOT BE A COMPLETE INVENTORY OF ALL THE EXISTING UTILITIES PRESENT ON AND AROUND THIS SITE. THE LOCATION AND SIZE OF THESE UTILITIES MAY BE APPROXIMATE. THIS INFORMATION WAS GATHERED OR SUPPLIED BY OTHERS AND USED BY THE ENGINEER AND MAY NOT BE ACTUAL. THE ENGINEER SHALL NOT BE HELD LIABLE FOR ANY INCORRECT OR MISLEADING UTILITY INFORMATION INDICATED, IMPLIED, OR NOT INDICATED ON THESE PLANS.
10. IT SHALL BE THE RESPONSIBILITY OF THE CONTRACTOR TO BEAR ALL EXPENSES TO REMOVE, RELOCATE AND OR MODIFY ALL UTILITIES, PRIVATE OR PUBLIC, OR OTHERWISE, IT SHALL BE THE RESPONSIBILITY OF THE CONTRACTOR TO VERIFY WITH EACH UTILITY COMPANY AND OR AGENT WHOM IS RESPONSIBLE TO REMOVE, RELOCATE, AND/OR MODIFY SUCH UTILITY EXISTING OR PROPOSED. IT FURTHER SHALL BE THE CONTRACTORS' RESPONSIBILITY TO VERIFY IF ANY FUTURE UTILITIES ARE PLANNED AND HOW IT MAY EFFECT THIS PROJECT AND IT'S OWNER AS TO THEIR FUTURE RESPONSIBILITIES.
11. CONTRACTOR TO ARRANGE SHUTTING OFF INDICATED UTILITES PRIOR TO BEGINING DEMOLITION.
12. DISCONNECT PIPE OR CONDUIT A MINIMUM OF 24" BELOW THE FINAL GRADE. CAP, VALVE, OR PLUG AND SEAL REMAINING PORTION OF PIPE OR CONDUIT.
13. COMPLETELY FILL BELOW GRADE VOIDS RESULTING FROM BUILDING DEMOLITION OPERATIONS. SEE PROJECT SPECIFICATIONS, EARTHWORK SECTION
14. PROMPTLY REPAIR DAMAGE TO ADJACENT PROPERTY CAUSED BY DEMOLITON OPERATIONS
15. ERECT AND MAINTAIN TEMPORARY FENCING AROUND TREE PROTECTION ZONES BEFORE STARTING SITE CLEARING. REMOVE FENCE WHEN CONSTRUCTION IS COMPLETE.
16. PROVIDE TEMPORARY EROSION AND SEDEMENTARY CONTROL MEASURES TO PREVENT SOIL EROSION AND DISCHARGE OF SOIL–BEARING WATER RUNOFFS OR AIRBORNE DUST TO ADACENT PROPERTIES AND WALKWAYS. SEE SHEETS C102, C801–C802.
17. TEMPORARY TRAFFIC CONTROL DURING CONSTRUCTION TO CONFORM TO APPLICABLE LOCAL AND STATE STANDARDS.
18. ALL CONSTRUCTION ACTIVITY ON THIS SITE TO BE PERFORMED IN COMPLIANCE WITH APPLICABLE O.S.H.A. STANDARDS FOR WORKER SAFTEY.
19. TIE ALL EXISTING DRAINAGE TILES INTO STORM SEWER.
20. FIELD LOCATE EXISTING SERVICE CONNECTIONS. CUT AND CAP EXISTING UTILITIES AT LOCATION DIRECTED BY UTILITY CO. RELOCATION OF UTILITIES SHALL BE THE RESPONSIBILITY OF THE CONTRACTOR AS WELL AS COORDINATION WITH RELATIVE UTILITY COMPANIES. CONTRACTOR TO CARRY ALL COSTS RELATED TO UTILITY EXPENSES AND COSTS TO ACCOMPLISH SAID RELOCATION.
21. REMOEVE BELOW GRADE CONSTRUCTION, INCLUDING BASEMENTS, FOUNDATION WALKS, AND FOOTINGS COMPLETELY
22. FILL ABANDONED WELLS WITH "B" BORROW, OR CONCRETE.
23. VERIFY LOCATION AND DEPTH OF UTILITIES IN THE EASEMENT ALONG THE WEST PROPERTY LINE.

REVISIONS:

DAVID A. CLARK
REGISTERED
No. 19300219
STATE OF INDIANA
PROFESSIONAL ENGINEER

DATE: 06/27/08

THIS DRAWING AND THE IDEAS, DESIGNS AND CONCEPTS CONTAINED HEREIN ARE THE EXCLUSIVE INTELLECTUAL PROPERTY OF THE SCHNEIDER CORPORATION, AND ARE NOT TO BE USED OR REPRODUCED, IN WHOLE OR IN PART, WITHOUT THE WRITTEN CONSENT OF THE SCHNEIDER CORPORATION.
© COPYRIGHTED BY THE SCHNEIDER CORP. (2008)

Schneider
THE SCHNEIDER CORPORATION
Historic Fort Harrison
8901 Otis Avenue
Indianapolis, IN 46216–1037
Telephone: 317.826.7100
Fax: 317.826.7200
www.schneidercorp.com

Architecture
Civil Engineering
Environmental Engineering
Geotechnical Services
GIS * LIS
Home Builder Services
Interior Design
Land Surveying
Landscape Architecture
Transportation Engineering

CENTENNIAL SOUTH EXPANSION
WESTFIELD, INDIANA

ESTRIDGE DEVELOPMENT CO., INC.
CARMEL, INDIANA

DATE:	PROJECT NO.:
06/27/08	3915.004
DRAWN BY: PRC	CHECKED BY: JLF

SHEET TITLE:
DEMOLITUION PLAN

DRAWING FILES:
R:\3K\3915\004\DWGS\D101
XREF: 004BS
XREF: 3915004S
XREF: R:\3K\3915\001\DWGS\001BS

SHEET NO.:
D101

STRUCTURE		L	DIA	SLOPE	RIM		INVERT	
UP	DOWN	(ft)	(in)	%	UP	DOWN	UP	DOWN
614	613	73	12	2.5	907.90	-	904.65	902.83
610	609	49	12	3.45	907.90	904.60	903.40	901.71
609	604	209	12	0.33	904.60	905.00	901.60	900.91
618	617	24	12	0.32	904.87	904.87	901.12	901.04
617	140	116	12	0.57	904.87	902.69	900.94	900.28
606	605	58	12	0.8	907.60	907.10	904.35	903.89
605	604	210	12	0.95	907.10	905.00	903.79	901.79
604	603	168	18	0.2	905.00	905.24	900.81	900.47
603	602	38	18	0.2	905.24	905.24	900.37	900.30
602	601	160	21	0.15	905.24	-	900.20	899.96
600	135	30	12	0.32		902.17	899.94	899.84

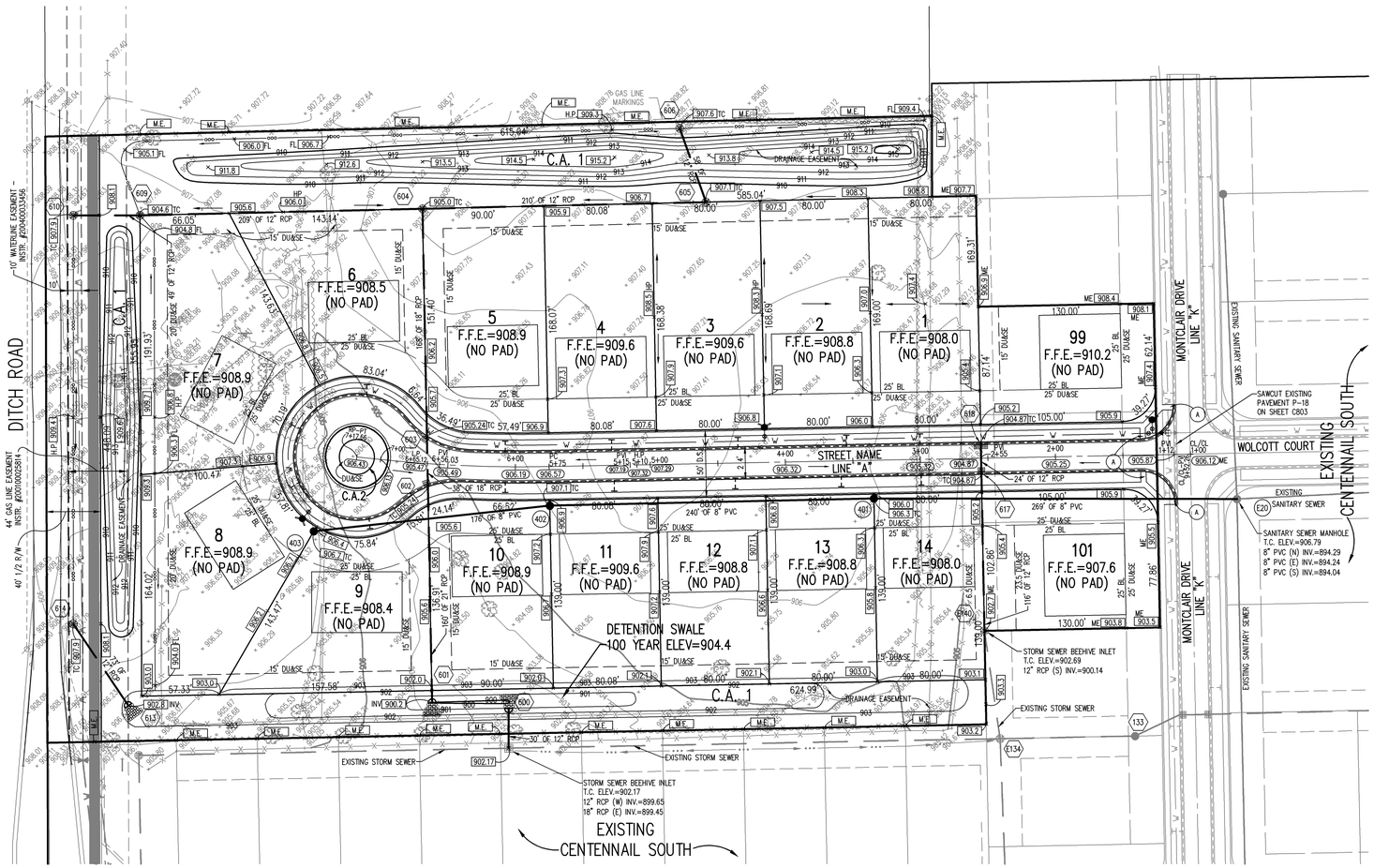

Utilities

Indiana Underground Utility Location Service (1-800-382-5544) was contacted on 29 NOV 04 for marking of utilities on 01 DEC 04 confirmation #0411292053, 0411292042 and 0411292023.

Sanitary Sewers
Westfield Utilities
2706 East 171st Street
Westfield, Indiana 46074
317-896-5577

Water
Westfield Utilities
2706 East 171st Street
Westfield, Indiana 46074
317-896-5577

Gas
Westfield Gas Corp.
606 West Park Street
Westfield, Indiana 46074
317-896-2581

Pipeline
Marathon Ashland Pipe Line LLC
9322 West 30th Street
Indianapolis, Indiana 46218
317-291-9460

Cable
Insight Cablevision
15229 Stoney Creek Way
Noblesville, Indiana 46060
317-776-0660

Telephone
At&t
220 North Meridian Street
Indianapolis, Indiana 46204
317-556-4000

Gas
Vectren Energy Delivery
P.O. Box 1700
Noblesville, Indiana 46061
317-776-5334

Cable
Bright House Networks
3030 Roosevelt Avenue
Indianapolis, Indiana 46218
317-632-2288

Pipeline
Buckeye Pipeline Company LP
9430 West 30th Street
Clermont, Indiana 46229
317-291-3121

Electric
Cinergy
1000 East Main Street
Plainfield, Indiana 46168
800-521-2232

Utility Hotline: within Indiana 1-800-382-5544 outside Indiana 1-800-428-5200

Note
The nature, size and location of utilities are per plans and locations provided by the respective utility companies. The above list constitutes some, if not all, of the utility companies which may provide service in the area of, and adjacent to, the subject project, based upon the information available through such plans and locations, and any incidental visual inspection. All utility companies should be notified prior to any excavation for field location of services and verification of size and nature of services.

HOLEY MOLEY SAYS
"DON'T DIG BLIND"

"IT'S THE LAW"
CALL 2 WORKING DAYS BEFORE YOU DIG
1-800-382-5544
CALL TOLL FREE
PER INDIANA STATE LAW IS-69-1991. IT IS AGAINST THE LAW TO EXCAVATE WITHOUT NOTIFYING THE UNDERGROUND LOCATION SERVICE TWO (2) WORKING DAYS BEFORE COMMENCING WORK.

ASSUMED NORTH
SCALE: 1"=50'

BENCHMARK

BM – U.S.G.S. 93 RHP, BRASS DISK IN A CONCRETE POST AT THE SOUTHWEST CORNER OF 146TH STREET AND DITCH ROAD.
ELEVATION = 903.373 (NGVD 1929)

TBM2 – CUT SQUARE ON TOP OF CONCRETE BASE AT THE NORTH SIDE OF CONCRETE FENCE POST, WEST SIDE OF DITCH ROAD, 1320'± SOUTH OF 156TH STREET, ESTABLISHED FROM PREVIOUS JOB #753 (CENTENNIAL).
ELEVATION = 916.99 (NGVD 1929)

TBM4 – RAILROAD SPIKE SET 1.0' UP IN THE SOUTH SIDE OF A UTILITY POLE ON THE WEST SIDE OF DITCH ROAD, 267' NORTH OF THE SOUTHWEST CORNER AND 180' SOUTH OF THE NORTHWEST CORNER OF THE SUBJECT TRACT.
ELEVATION = 909.51 (NGVD 1929)

LEGEND

- Existing Storm Sewer
- New Storm Sewer
- Existing Sanitary Sewer
- New Sanitary Sewer
- Existing Contour
- (000.00) New Pavement Grade
- 000.00 All Other Finish Grades
- (XXX) Storm Structure Number
- (000) Sanitary Structure Number
- Flow Arrow
- F.F.E.=000.0 Denotes Approximate Home Location and Finished Floor Elevations
- M.E. Meet Existing Elevation
- Indicates Flood Routing
- MFPG=000.0 Denotes Minimun Flood Protection Grade
- New Subsurface Drains
- (A) Handicapped Ramp See Fig. P-11 & P11A on Sheet C803

GENERAL NOTES

1. ALL RADIUS AND OTHER DIMENSIONS FOR 2' ROLL CURB ARE TO BACK OF CURB
2. IT SHALL BE THE RESPONSIBILITY OF EACH CONTRACTOR TO VERIFY ALL EXISTING UTILITIES AND CONDITIONS PERTAINING TO HIS PHASE OF WORK. IT SHALL ALSO BE THE CONTRACTOR'S RESPONSIBILITY TO CONTACT THE OWNERS OF THE VARIOUS UTILITIES FOR PROPER STAKE LOCATIONS FOR EACH UTILITY BEFORE WORK IS STARTED. THE CONTRACTOR SHALL NOTIFY IN WRITING THE OWNER OR THE ENGINEER OF ANY CHANGES, OMISSIONS, OR ERRORS FOUND ON THESE PLANS OR IN THE FIELD BEFORE WORK IS STARTED OR RESUMED.
3. VERIFY SIGN LOCATIONS AND SIGN REQUIREMENTS WITH LOCAL GOVERNING AUTHORITIES.
4. TEMPORARY TRAFFIC CONTROL DURING CONSTRUCTION TO CONFORM TO APPLICABLE LOCAL AND STATE STANDARDS.
5. ALL CONSTRUCTION ACTIVITY ON THIS SITE TO BE PERFORMED IN COMPLIANCE WITH APPLICABLE O.S.H.A. STANDARDS FOR WORKER SAFETY.
6. THE SIZE AND LOCATION OF EXISTING UTILITIES SHOWN AREA PER INFORMATION PROVIDED BY THE RESPECTIVE UTILITY COMPANIES. ALL UTILITY COMPANIES SHOULD BE NOTIFIED PRIOR TO ANY EXCAVATION FOR FIELD LOCATION OF SERVICES.
7. SERVICE WALKS SHALL BE CONSTRUCTED PER FIG. P-10 ON SHEET C803.
8. ROLL CURB SHALL BE DEPRESSED AT SIDEWALK INTERSECTIONS MARKED WITH HANDICAPPED RAMPS PER FIG. P-11 & P11A ON SHEET C803.
9. LOCATION OF SERVICE WALKS TO INDIVIDUAL UNITS SHALL ALIGN WITH PORCH STEPS AS CONSTRUCTED WITH BUILDINGS AND SHALL BE CONSTRUCTED AFTER BUILDINGS ARE COMPLETED.
10. ALL EXISTING OFF-SITE DRAIN TILES THAT ARE ENCOUNTERED SHALL BE TIED INTO THE PROPOSED STORM SEWER SYSTEM WITH A POSITIVE OUTFLOW.

REVISIONS:

DAVID A. CLARK
REGISTERED
No. 19300219
STATE OF INDIANA
PROFESSIONAL ENGINEER

DATE: 06/27/08

THIS DRAWING AND THE IDEAS, DESIGNS AND CONCEPTS CONTAINED HEREIN ARE THE EXCLUSIVE INTELLECTUAL PROPERTY OF THE SCHNEIDER CORPORATION, AND ARE NOT TO BE USED OR REPRODUCED, IN WHOLE OR IN PART, WITHOUT THE WRITTEN CONSENT OF THE SCHNEIDER CORPORATION.
© COPYRIGHTED BY THE SCHNEIDER CORP. (2008)

Schneider
THE SCHNEIDER CORPORATION
Historic Fort Harrison
8901 Otis Avenue
Indianapolis, IN 46216-1037
Telephone: 317.826.7100
Fax: 317.826.7200
www.schneidercorp.com

Architecture
Civil Engineering
Environmental Engineering
Geotechnical Services
GIS * LIS
Home Builder Services
Interior Design
Land Surveying
Landscape Architecture
Transportation Engineering

CENTENNIAL SOUTH EXPANSION
WESTFIELD, INDIANA

ESTRIDGE DEVELOPMENT CO., INC.
CARMEL, INDIANA

DATE:	PROJECT NO.:
06/27/08	3915.004
DRAWN BY: PRC	CHECKED BY: JLF

SHEET TITLE: DEVLOPMENT PLAN

DRAWING FILES:
R:\3K\3915\004\DWGS\C101
XREF: 0048S
XREF: 3915004S
XREF: R:\3K\3915\001\DWGS\001BS

SHEET NO.: C101

R:\3K\3915\004\dwgs\C101.dwg, 6/30/2008 12:42:14 PM, KIP 7604.pc3

BENCHMARK

BM – U.S.G.S. 93 RHP, BRASS DISK IN A CONCRETE POST AT THE SOUTHWEST CORNER OF 146TH STREET AND DITCH ROAD.
ELEVATION = 903.373 (NGVD 1929)

TBM2 – CUT SQUARE ON TOP OF CONCRETE BASE AT THE NORTH SIDE OF CONCRETE FENCE POST, WEST SIDE OF DITCH ROAD, 1320'± SOUTH OF 156TH STREET, ESTABLISHED FROM PREVIOUS JOB #753 (CENTENNIAL).
ELEVATION = 916.99 (NGVD 1929)

TBM4 – RAILROAD SPIKE SET 1.0' UP IN THE SOUTH SIDE OF A UTILITY POLE ON THE WEST SIDE OF DITCH ROAD, 267' NORTH OF THE SOUTHWEST CORNER AND 180' SOUTH OF THE NORTHWEST CORNER OF THE SUBJECT TRACT.
ELEVATION = 909.51 (NGVD 1929)

LEGEND

- HATCH PATTERN DENOTES TEMPORARY SEEDING
- HATCH PATTERN DENOTES PERMANENT SEEDING
- HATCH PATTERN DENOTES EROSION CONTROL BLANKET
- (TS) TEMPORARY SEDIMENT FILTER/BARRIER– SEE DETAILS SHEET C801
- (OP) OUTLET PROTECTION– SEE DETAIL SHEET C801
- x — x — TEMPORARY SILT FENCE– SEE DETAIL SHEET C801
- □ TEMPORARY SEDIMENT FILTER– SEE DETAIL SHEET C801
- CONSTRUCTION LIMITS

HOLEY MOLEY SAYS
"DON'T DIG BLIND"

"IT'S THE LAW"
CALL 2 WORKING DAYS BEFORE YOU DIG
1-800-382-5544
CALL TOLL FREE
PER INDIANA STATE LAW IS-69-1991, IT IS AGAINST THE LAW TO EXCAVATE WITHOUT NOTIFYING THE UNDERGROUND LOCATION SERVICE TWO (2) WORKING DAYS BEFORE COMMENCING WORK.

ASSUMED NORTH
SCALE: 1"=50'

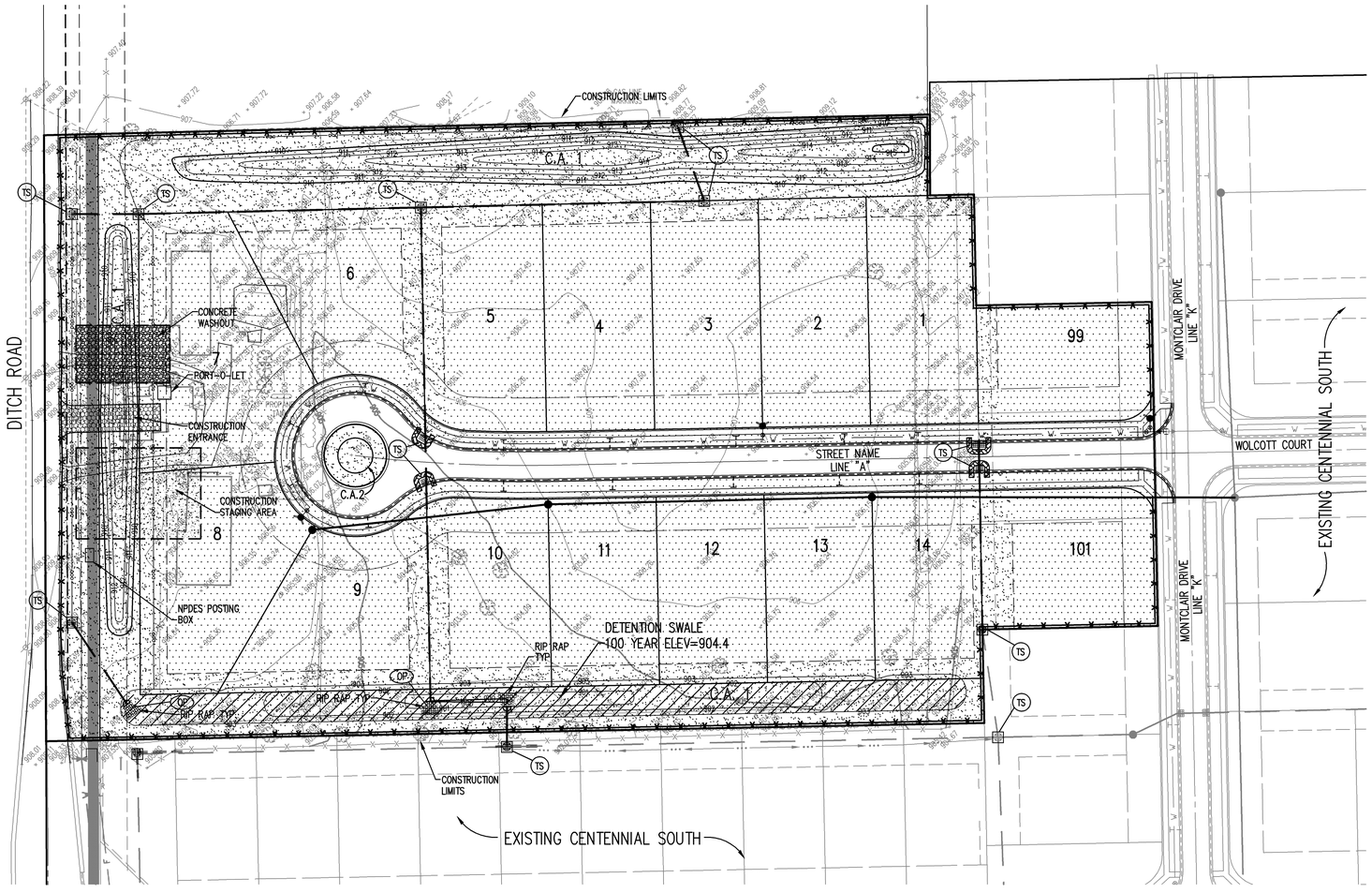

EROSION CONTROL SCHEDULE

EROSION CONTROL MEASURE	MAINTENANCE	INSTALLATION SEQUENCE
STONE ENTRANCE	AS NEEDED	PRIOR TO CLEARING AND GRADING
SILT FENCE	WEEKLY, AFTER STORM EVENTS AND AS NEEDED	PRIOR TO CLEARING AND GRADING
EXISTING INLET PROTECTION	WEEKLY, AFTER STORM EVENTS AND AS NEEDED	PRIOR TO CLEARING AND GRADING
TREE PROTECTION	WEEKLY, AFTER STORM EVENTS AND AS NEEDED	PRIOR TO CLEARING AND GRADING
TEMPORARY DIVERSIONS	WEEKLY, AFTER STORM EVENTS AND AS NEEDED	ALONG WITH ROUGH GRADING
TEMPORARY SEEDING	WATER AS NEEDED	AFTER ROUGH GRADING
PERMANENT SEEDING	WATER AS NEEDED	AFTER FINISH GRADING
EROSION CONTROL MATTING	WEEKLY, AFTER STORM EVENTS AND AS NEEDED	AFTER FINISH GRADING
STRAW BALES	WEEKLY, AFTER STORM EVENTS AND AS NEEDED	AFTER FINISH GRADING
INLET PROTECTION	WEEKLY, AFTER STORM EVENTS AND AS NEEDED	AFTER EACH INLET IS PLACED
SEED, SOD & LANDSCAPE AROUND UNITS FINISHED	WATER AS NEEDED)	AFTER FINISHED GRADING AROUND FINISHED UNITS
REMOVAL OF STRAW BALES	N/A	AFTER ALL AREAS DRAINING TO THESE AREAS ARE STABILIZED
REMOVAL OF INLET PROTECTION	N/A	AFTER ALL AREAS DRAINING TO THESE AREAS ARE STABILIZED
REMOVAL OF SILT FENCE	N/A	AFTER ALL AREAS DRAINING TO THESE AREAS ARE STABILIZED

CONSTRUCTION SEQUENCING

The following sequencing should be followed as much as possible, and any dewatering required during construction of this project shall be done through a "Dandy" dewatering bag or approved equal.

Call the Indiana Underground Protection Systems, Inc. ("Holey Moley") @ 1-800-382-5544 to check to location of any utilities at least two working days before work is to commence.

Establish onsite location for owner/operator/contractor placement of approved plans and Rule 5 NOI inspection documentation.

IDEM & CITY OF WESTFIELD MUST BE NOTIFIED WITHIN 48 HOURS OF WHEN THE CONSTRUCTION IS SCHEDULED TO BEGIN.

PRE-CONSTRUCTION ACTIVITIES (MASS EARTHWORK)

1. Install temporary stone access drive off of Ditch Road.
2. Construct Rule 5 information posting site, install trash dumpster, and place port-o-let.
3. Install silt fencing as shown.
4. Strip topsoil from pad and road areas.
5. Excavate road bed and prepare building pads as shown.
6. Install temporary seed in all disturbed areas.
7. Excavate detention swale. Install outlet structure for water quality pond as shown on sheet C101.
8. Install permanent seed and erosion control blanket on detention swale banks after completion.
9. Maintain all silt fencing by cleaning out every week and after every storm event.

CONSTRUCTION ACTIVITIES

1. Install concrete washout basin as indicated on plans.
2. Install lime in road subgrades as required.
3. Install storm sewer pipe and street underdrain with rip rap at pipe end sections. Immediately install inlet protection after installation of each inlet as completed.
4. Install all remaining utilities including sanitary, electric, water and gas. After completely installing offsite sanitary and water lines, install permanent seed.
5. Complete and/or repair earthwork for building pads and road subgrades.
6. Install perimeter and rear yard swales.
7. Permanently seed perimeter and rear yard swales.
8. Permanently seed all areas disturbed by installation of offsite sanitary and water mains.
9. Fine grade and permanently seed disturbed Common Areas upon completion of streets.
10. Install temporary seed in all remaining disturbed areas as completed.
11. Install silt fence along sidewalks to prevent siltation of new walks and streets if home/lot construction is to begin immediately.
12. Clean and maintain all ditch checks, silt fences, and inlet protection until site is stabilized.

POST CONSTRUCTION ACTIVITIES

1. Distribute Post Construction BMP Operations and Maintenance Manual to BMP owner.
2. Identify and locate the following BMP structures for the owner:
   - Stormwater quality ponds
   - Detention swale banks
   - Vegetated Swales
   - Energy dissipating Rip-Rap at pipe outlets
3. BMP owners must routinely inspect BMPs to verify that all BMP components are functioning as designed and are not in danger of failing.
4. BMP owner is responsible for the maintenance of the BMP and any costs associated with maintaining the BMP.
5. BMP Owner shall keep the BMP free from litter, woody growth, and shall mow the BMP when needed, but average grass blade height not to exceed six (6) inches. Refer to the inspection and maintenance guidelines for further clarification.
6. Sediment that collects in the BMP shall be removed when it adversely affects the ability of the BMP to perform as a water quality control device.

NOTE: EROSION CONTROL PLAN MUST BE EXECUTED BEFORE ANY CONSTRUCTION COMMENCES.

NOTE: ADDITIONAL EROSION CONTROL MEASURES MAY BE REQUIRED IN THE FIELD BY THE INSPECTOR.

REVISIONS:

DAVID A. CLARK
REGISTERED
No. 19300219
STATE OF INDIANA
PROFESSIONAL ENGINEER

DATE: 06/27/08

THIS DRAWING AND THE IDEAS, DESIGNS AND CONCEPTS CONTAINED HEREIN ARE THE EXCLUSIVE INTELLECTUAL PROPERTY OF THE SCHNEIDER CORPORATION, AND ARE NOT TO BE USED OR REPRODUCED, IN WHOLE OR IN PART, WITHOUT THE WRITTEN CONSENT OF THE SCHNEIDER CORPORATION.
© COPYRIGHTED BY THE SCHNEIDER CORP. (2008)

Schneider
THE SCHNEIDER CORPORATION
Historic Fort Harrison
8901 Otis Avenue
Indianapolis, IN 46216-1037
Telephone: 317.826.7100
Fax: 317.826.7200
www.schneidercorp.com

Architecture
Civil Engineering
Environmental Engineering
Geotechnical Services
GIS * LIS
Home Builder Services
Interior Design
Land Surveying
Landscape Architecture
Transportation Engineering

CENTENNIAL SOUTH EXPANSION
WESTFIELD, INDIANA

ESTRIDGE DEVELOPMENT CO., INC.
CARMEL, INDIANA

DATE:	PROJECT NO.:
06/27/08	3915.004
DRAWN BY: PRC	CHECKED BY: JLF

SHEET TITLE:
STORMWATER POLLUTION PREVENTION PLAN

DRAWING FILES:
R:\JK\3915\004\DWGS\C102
XREF: 004BS
XREF: 3915001S
XREF: EROSION
XREF: R:\JK\3915\001\DWGS\001BS

SHEET NO.:
C102

R:\JK\3915\004\dwgs\C102.dwg, 6/30/2008 12:45:47 PM, KIP 7004.pc3

BENCHMARK

BM – U.S.G.S. 93 RHP, BRASS DISK IN A CONCRETE POST AT THE SOUTHWEST CORNER OF 146TH STREET AND DITCH ROAD. ELEVATION = 903.373 (NGVD 1929)

TBM2 – CUT SQUARE ON TOP OF CONCRETE BASE AT THE NORTH SIDE OF CONCRETE FENCE POST, WEST SIDE OF DITCH ROAD, 1320'± SOUTH OF 156TH STREET, ESTABLISHED FROM PREVIOUS JOB #753 (CENTENNIAL). ELEVATION = 916.99 (NGVD 1929)

TBM4 – RAILROAD SPIKE SET 1.0' UP IN THE SOUTH SIDE OF A UTILITY POLE ON THE WEST SIDE OF DITCH ROAD, 267' NORTH OF THE SOUTHWEST CORNER AND 180' SOUTH OF THE NORTHWEST CORNER OF THE SUBJECT TRACT. ELEVATION = 909.51 (NGVD 1929)

GENERAL NOTES

1. TEMPORARY TRAFFIC CONTROL DURING CONSTRUCTION TO CONFORM TO APPLICABLE LOCAL AND STATE STANDARDS.
2. ALL CONSTRUCTION ACTIVITY ON THIS SITE TO BE PERFORMED IN COMPLIANCE WITH APPLICABLE O.S.H.A. STANDARDS FOR WORKER SAFETY.
3. IT SHALL BE THE CONTRACTORS RESPONSIBILITY TO FIELD VERIFY ALL UTILITY LOCATIONS BEFORE CONSTRUCTION BEGINS.
4. CONTRACTORS SHALL MINIMIZE DAMAGE TO EXISTING TREES.
5. ALL ELEVATIONS WITHIN VERTICAL CURVES (SHOWN INPARENTHESIS) ARE CORRECTED ELEVATIONS.

HOLEY MOLEY SAYS "DON'T DIG BLIND"

"IT'S THE LAW"
CALL 2 WORKING DAYS BEFORE YOU DIG
1-800-382-5544
CALL TOLL FREE
PER INDIANA STATE LAW IS-69-1991. IT IS AGAINST THE LAW TO EXCAVATE WITHOUT NOTIFYING THE UNDERGROUND LOCATION SERVICE TWO (2) WORKING DAYS BEFORE COMMENCING WORK.

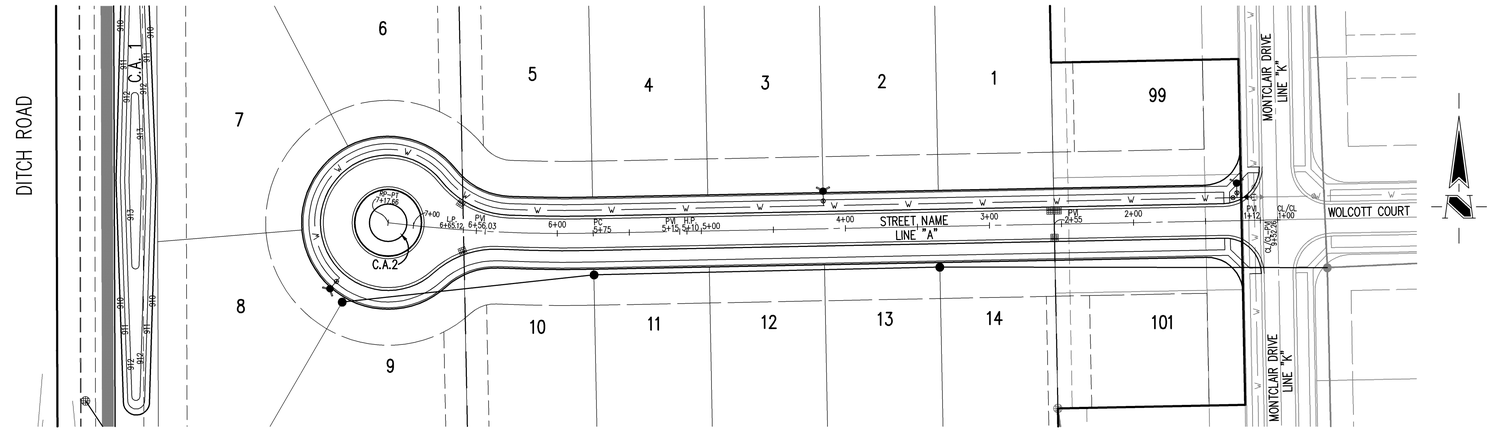

DETAILS

Sheet	Detail Number	Description
C803	1	Street Cross Section Detail
C803	P-10	Concrete Sidewalk Detail
C803	P-11&11A	Sidewalk Ramp For Handicapped Detail
C803	P-8	Curb Detail
C803	P-9	Pipe Underdrain Detail
C301		Intersection Details

NOTE

STREET PLAN

SCALE: 1"=50'

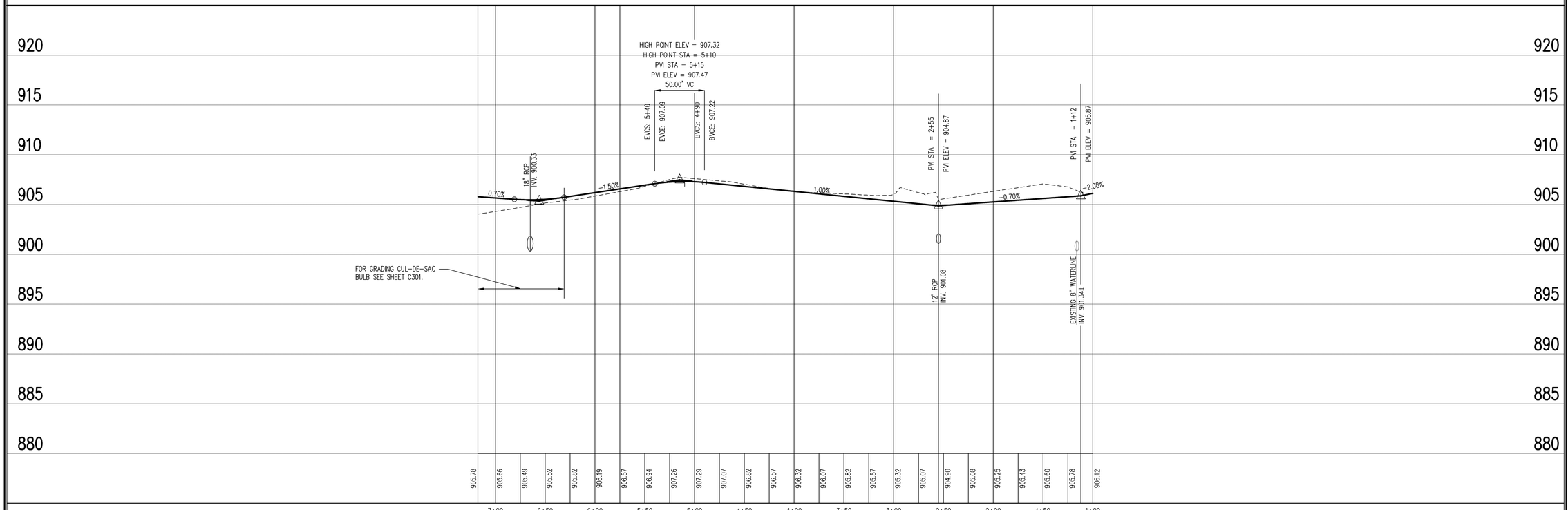

STREET PROFILE

LEGEND: Existing Grade / New Grade

SCALE: HORZ.: 1"=50' VERT.: 1"=5'

REVISIONS:

DAVID A. CLARK REGISTERED No. 19300219 STATE OF INDIANA PROFESSIONAL ENGINEER

DATE: 06/27/08

THIS DRAWING AND THE IDEAS, DESIGNS AND CONCEPTS CONTAINED HEREIN ARE THE EXCLUSIVE INTELLECTUAL PROPERTY OF THE SCHNEIDER CORPORATION, AND ARE NOT TO BE USED OR REPRODUCED, IN WHOLE OR IN PART, WITHOUT THE WRITTEN CONSENT OF THE SCHNEIDER CORPORATION.

© COPYRIGHTED BY THE SCHNEIDER CORP. (2008)

Schneider

THE SCHNEIDER CORPORATION
Historic Fort Harrison
8901 Otis Avenue
Indianapolis, IN 46216-1037
Telephone: 317.826.7100
Fax: 317.826.7300
www.schneidercorp.com

Architecture
Civil Engineering
Environmental Engineering
Geotechnical Services
GIS * LIS
Home Builder Services
Interior Design
Land Surveying
Landscape Architecture
Transportation Engineering

CENTENNIAL SOUTH EXPANSION
WESTFIELD, INDIANA

ESTRIDGE DEVELOPMENT CO., INC.
CARMEL, INDIANA

DATE: 06/27/08	PROJECT NO.: 3915.004
DRAWN BY: PRC	CHECKED BY: JLF

SHEET TITLE: STREET PLAN

DRAWING FILES:
R:\3K\3915\004\DWGS\C201
XREF: STREET
XREF: 004BS
XREF: 3915004S
XREF: R:\3K\3915\001\DWGS\001BS

SHEET NO.: C201

R:\3K\3915\004\dwgs\C201.dwg, 6/30/2008 12:49:59 PM, KIP 7604.pc3

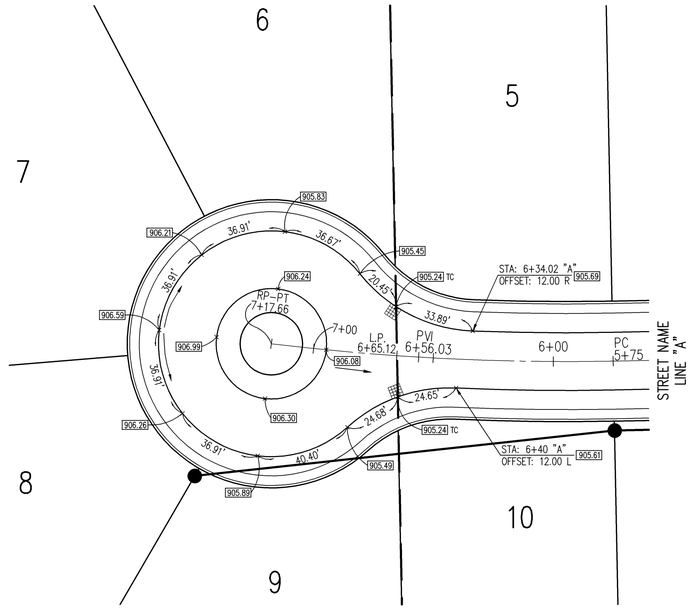

STREET NAME
SCALE: 1"=30'
2 / C301

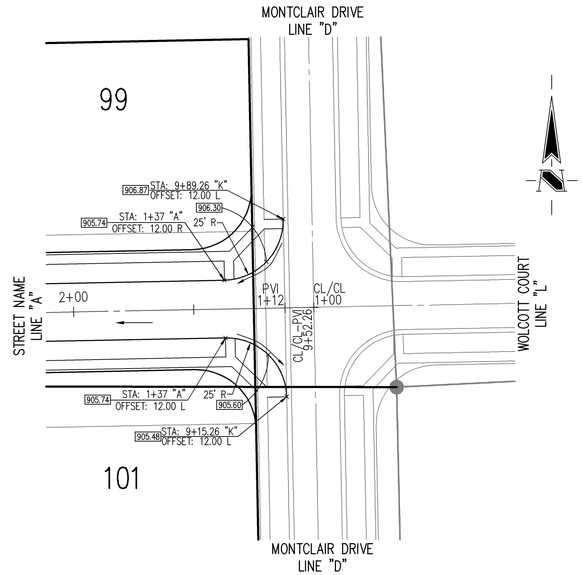

STREET NAME &
MONTCLAIR DRIVE
SCALE: 1"=30'
1 / C301

GENERAL NOTES

1. ALL STREETS ARE TO BE 24' WIDE AND HAVE A 50' DEDICATED STREET EASEMENT WIDTH, UNLESS OTHERWISE NOTED.

BENCHMARK

BM – U.S.G.S. 93 RHP, BRASS DISK IN A CONCRETE POST AT THE SOUTHWEST CORNER OF 146TH STREET AND DITCH ROAD.
ELEVATION = 903.373 (NGVD 1929)

TBM2 – CUT SQUARE ON TOP OF CONCRETE BASE AT THE NORTH SIDE OF CONCRETE FENCE POST, WEST SIDE OF DITCH ROAD, 1320'± SOUTH OF 156TH STREET, ESTABLISHED FROM PREVIOUS JOB #753 (CENTENNIAL).
ELEVATION = 916.99 (NGVD 1929)

TBM4 – RAILROAD SPIKE SET 1.0' UP IN THE SOUTH SIDE OF A UTILITY POLE ON THE WEST SIDE OF DITCH ROAD, 267' NORTH OF THE SOUTHWEST CORNER AND 180' SOUTH OF THE NORTHWEST CORNER OF THE SUBJECT TRACT.
ELEVATION = 909.51 (NGVD 1929)

REVISIONS:

DAVID A. CLARK
REGISTERED
No. 19300219
STATE OF INDIANA
PROFESSIONAL ENGINEER

DATE: 06/27/08

THIS DRAWING AND THE IDEAS, DESIGNS AND CONCEPTS CONTAINED HEREIN ARE THE EXCLUSIVE INTELLECTUAL PROPERTY OF THE SCHNEIDER CORPORATION, AND ARE NOT TO BE USED OR REPRODUCED, IN WHOLE OR IN PART, WITHOUT THE WRITTEN CONSENT OF THE SCHNEIDER CORPORATION.

© COPYRIGHTED BY THE SCHNEIDER CORP. (2008)

Schneider

THE SCHNEIDER CORPORATION
Historic Fort Harrison
8901 Otis Avenue
Indianapolis, IN 46216–1037
Telephone: 317.826.7100
Fax: 317.826.7300
www.schneidercorp.com

Architecture
Civil Engineering
Environmental Engineering
Geotechnical Services
GIS * LIS
Home Builder Services
Interior Design
Land Surveying
Landscape Architecture
Transportation Engineering

CENTENNIAL SOUTH EXPANSION

WESTFIELD, INDIANA

ESTRIDGE DEVELOPMENT CO., INC.
CARMEL, INDIANA

DATE: 06/27/08	PROJECT NO.: 3915.004
DRAWN BY: PRC	CHECKED BY: JLF

SHEET TITLE:
CUL-DE-SAC & INTERSECTION DETAILS

DRAWING FILES:
R:\JK\3915\004\DWGS\C301
XREF: 001BS
XREF: R:\JK\3915\001\DWGS\001BS

SHEET NO.:
C301

HOLEY MOLEY SAYS
"DON'T DIG BLIND"

"IT'S THE LAW"
CALL 2 WORKING DAYS BEFORE YOU DIG
1-800-382-5544
CALL TOLL FREE
PER INDIANA STATE LAW IS-69-1991. IT IS AGAINST THE LAW TO EXCAVATE WITHOUT NOTIFYING THE UNDERGROUND LOCATION SERVICE TWO (2) WORKING DAYS BEFORE COMMENCING WORK.

ASSUMED NORTH
SCALE: 1"=50'

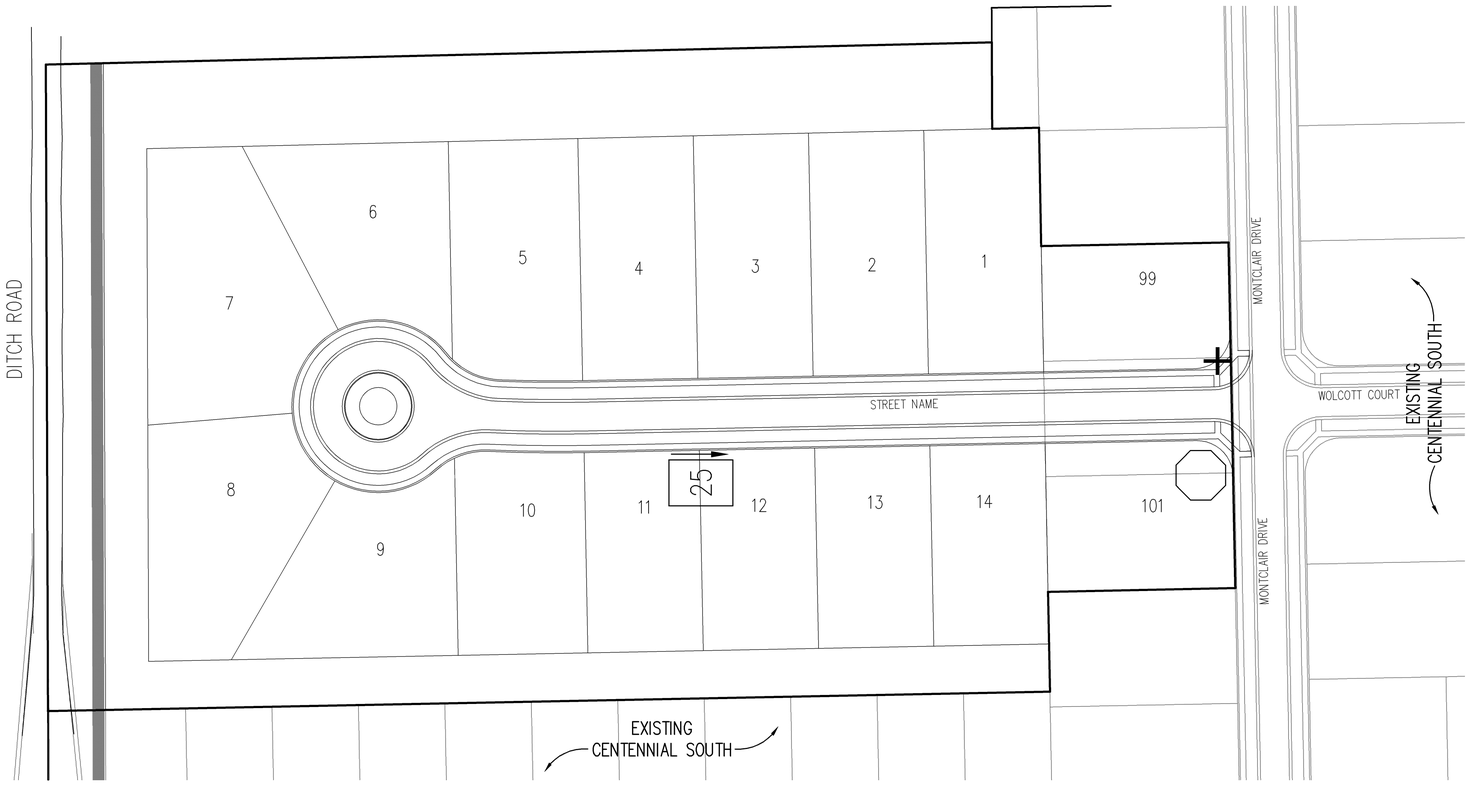

BENCHMARK

BM – U.S.G.S. 93 RHP, BRASS DISK IN A CONCRETE POST AT THE SOUTHWEST CORNER OF 146TH STREET AND DITCH ROAD.
ELEVATION = 903.373 (NGVD 1929)

TBM2 – CUT SQUARE ON TOP OF CONCRETE BASE AT THE NORTH SIDE OF CONCRETE FENCE POST, WEST SIDE OF DITCH ROAD, 1320'± SOUTH OF 156TH STREET, ESTABLISHED FROM PREVIOUS JOB #753 (CENTENNIAL).
ELEVATION = 916.99 (NGVD 1929)

TBM4 – RAILROAD SPIKE SET 1.0' UP IN THE SOUTH SIDE OF A UTILITY POLE ON THE WEST SIDE OF DITCH ROAD, 267' NORTH OF THE SOUTHWEST CORNER AND 180' SOUTH OF THE NORTHWEST CORNER OF THE SUBJECT TRACT.
ELEVATION = 909.51 (NGVD 1929)

GENERAL NOTES

1. TEMPORARY TRAFFIC CONTROL DURING CONSTRUCTION TO CONFORM TO APPLICABLE LOCAL AND STATE STANDARDS.
2. ALL CONSTRUCTION ACTIVITY ON THIS SITE TO BE PERFORMED IN COMPLIANCE WITH APPLICABLE O.S.H.A. STANDARDS FOR WORKER
3. ALL SIGNS AND PAVEMENT MARKINGS SHALL MEET IMUTCD STANDARDS. SAFETY.

LEGEND

(1 REQ.) STOP

(1 REQ.) 25 SPEED LIMIT (25 MPH)

(1 REQ.) + STREET NAME SIGN

REVISIONS:

DAVID A. CLARK
REGISTERED
No. 19300219
STATE OF INDIANA
PROFESSIONAL ENGINEER

DATE: 06/27/08

THIS DRAWING AND THE IDEAS, DESIGNS AND CONCEPTS CONTAINED HEREIN ARE THE EXCLUSIVE INTELLECTUAL PROPERTY OF THE SCHNEIDER CORPORATION, AND ARE NOT TO BE USED OR REPRODUCED, IN WHOLE OR IN PART, WITHOUT THE WRITTEN CONSENT OF THE SCHNEIDER CORPORATION.
© COPYRIGHTED BY THE SCHNEIDER CORP.(2008)

Schneider

THE SCHNEIDER CORPORATION
Historic Fort Harrison
8901 Otis Avenue
Indianapolis, IN 46216-1037
Telephone: 317.826.7100
Fax: 317.826.7200
www.schneidercorp.com

Architecture
Civil Engineering
Environmental Engineering
Geotechnical Services
GIS • LIS
Home Builder Services
Interior Design
Land Surveying
Landscape Architecture
Transportation Engineering

CENTENNIAL SOUTH EXPANSION

WESTFIELD, INDIANA

ESTRIDGE DEVELOPMENT CO., INC.
CARMEL, INDIANA

DATE:	PROJECT NO.:
06/27/08	3915.004
DRAWN BY: PRC	CHECKED BY: JLF

SHEET TITLE: TRAFFIC CONTROL PLAN

DRAWING FILES:
R:\3K\3915\004\DWGS\C302
XREF: 0048S
XREF: 3915004S
XREF: R:\3K\3915\001\DWGS\001BS

SHEET NO.: C302

R:\3K\3915\004\dwgs\C302.dwg, 6/30/2008 12:52:12 PM, KIP 7604.pc3

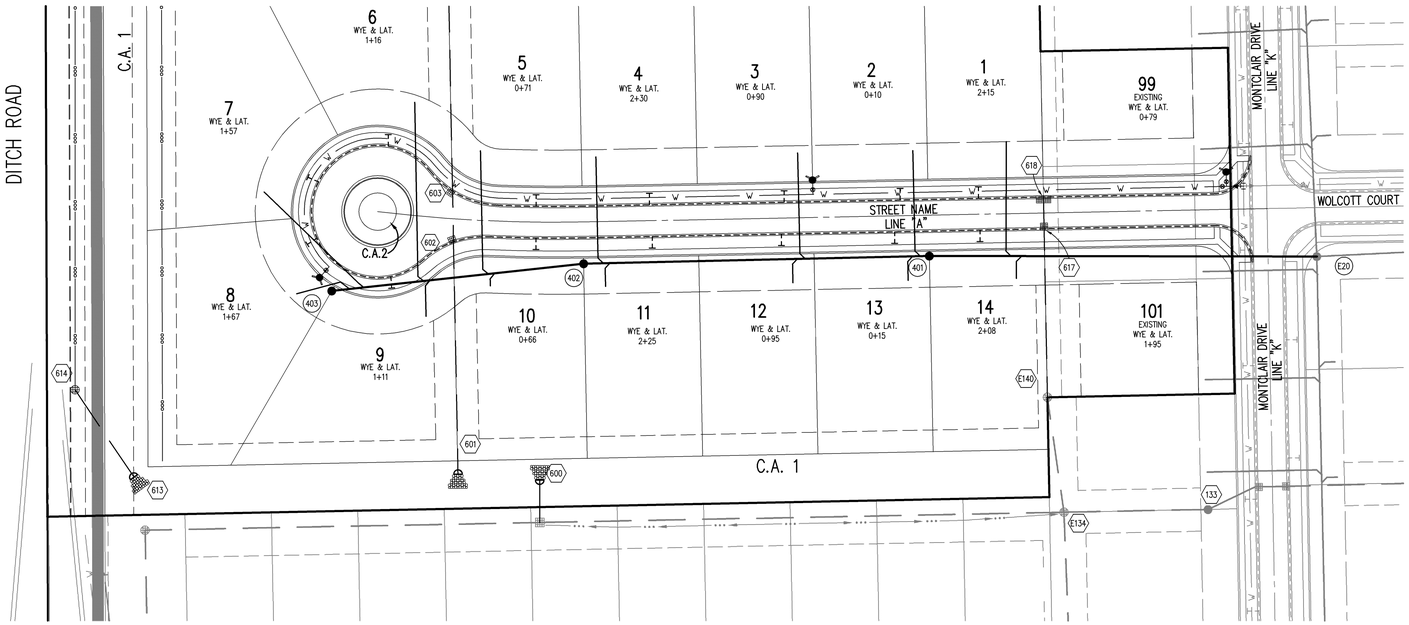

HOLEY MOLEY SAYS
"DON'T DIG BLIND"

"IT'S THE LAW"
CALL 2 WORKING DAYS BEFORE YOU DIG
1-800-382-5544
CALL TOLL FREE

PER INDIANA STATE LAW IS-69-1991. IT IS AGAINST THE LAW TO EXCAVATE WITHOUT NOTIFYING THE UNDERGROUND LOCATION SERVICE TWO (2) WORKING DAYS BEFORE COMMENCING WORK.

GENERAL NOTES

1. TEMPORARY TRAFFIC CONTROL DURING CONSTRUCTION TO CONFORM TO APPLICABLE LOCAL AND STATE STANDARDS.

2. ALL CONSTRUCTION ACTIVITY ON THIS SITE TO BE PERFORMED IN COMPLIANCE WITH APPLICABLE O.S.H.A. STANDARDS FOR WORKER SAFETY.

3. IT SHALL BE THE CONTRACTORS RESPONSIBILITY TO FIELD VERIFY ALL UTILITY LOCATIONS BEFORE CONSTRUCTION BEGINS.

4. CONTRACTORS SHALL MINIMIZE DAMAGE TO EXISTING TREES.

5. ALL WYE, LATERAL AND PROFILE STATIONS ARE FROM THE NEAREST DOWNSTREAM MANHOLE. (MH)

6. WYES AND LATERALS TO BE 6" PIPE UNLESS OTHERWISE SPECIFIED.

7. FOR SINGLE FAMILY LOTS ALL WYE CONNECTIONS SHALL HAVE A MINIMUM OF FIVE (5) FOOT LATERAL EXTENSION CONNECTED TO THE WYE, OR EXTEND TO THE UTILITY AND DRAINAGE EASEMENT OF THE LOT, WHICHEVER IS GREATER, BUT IN NO CASE SHOULD THE END OF THE LATERALS BE CLOSER THAN FIVE (5) FEET TO THE BUILDING LINE, UNLESS NOTED OTHERWISE. THE END OF THE LATERAL SHALL BE PLUGGED OR CAPPED, UNLESS OTHERWISE NOTED.

8. FOR SINGLE FAMILY LOTS, LATERALS RUNNING TO THE OPPOSITE SIDE OF THE STREET SHALL EXTEND TO THE UTILITY AND DRAINAGE EASEMENT OF THE LOT, BUT IN NO CASE SHOULD THE END OF THE LATERALS BE CLOSER THAN FIVE (5) FEET TO THE BUILDING LINE, UNLESS OTHERWISE NOTED.

BENCHMARK

BM – U.S.G.S. 93 RHP, BRASS DISK IN A CONCRETE POST AT THE SOUTHWEST CORNER OF 146TH STREET AND DITCH ROAD.
ELEVATION = 903.373 (NGVD 1929)

TBM2 – CUT SQUARE ON TOP OF CONCRETE BASE AT THE NORTH SIDE OF CONCRETE FENCE POST, WEST SIDE OF DITCH ROAD, 1320'± SOUTH OF 156TH STREET, ESTABLISHED FROM PREVIOUS JOB #753 (CENTENNIAL).
ELEVATION = 916.99 (NGVD 1929)

TBM4 – RAILROAD SPIKE SET 1.0' UP IN THE SOUTH SIDE OF A UTILITY POLE ON THE WEST SIDE OF DITCH ROAD, 267' NORTH OF THE SOUTHWEST CORNER AND 180' SOUTH OF THE NORTHWEST CORNER OF THE SUBJECT TRACT.
ELEVATION = 909.51 (NGVD 1929)

LEGEND/DETAILS

NOTE	Sheet	Detail Number	Description
	C804	S-1	Precast Reinforced Concrete Manhole
	C804	S-5	Sanitary Sewer Bedding Detail
	C804	S-11	Service Connection
	C804	S-10	Wye & Lateral Capping Detail
	C804	S-12	Service Connection
	C804	S-13	Service Connection

SANITARY SEWER PLAN

SCALE: 1"=50'

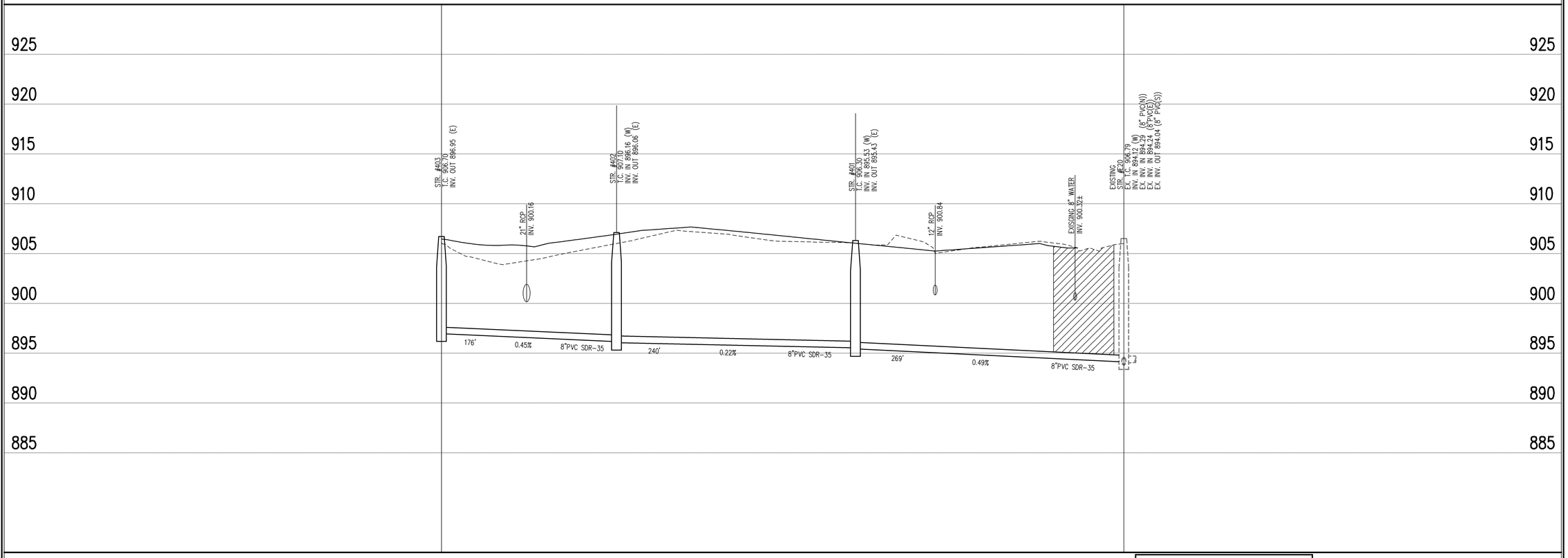

SANITARY SEWER PROFILE

LEGEND: Existing Grade | New Grade | Granular Backfill

SCALE: HORZ.: 1"=50' / VERT.: 1"=5'

REVISIONS:

DAVID A. CLARK
REGISTERED
No. 19300219
STATE OF INDIANA
PROFESSIONAL ENGINEER

DATE: 06/27/08

THIS DRAWING AND THE IDEAS, DESIGNS AND CONCEPTS CONTAINED HEREIN ARE THE EXCLUSIVE INTELLECTUAL PROPERTY OF THE SCHNEIDER CORPORATION, AND ARE NOT TO BE USED OR REPRODUCED, IN WHOLE OR IN PART, WITHOUT THE WRITTEN CONSENT OF THE SCHNEIDER CORPORATION.

© COPYRIGHTED BY THE SCHNEIDER CORP. (2008)

Schneider

THE SCHNEIDER CORPORATION
Historic Fort Harrison
8901 Otis Avenue
Indianapolis, IN 46216-1037
Telephone: 317.826.7100
Fax: 317.826.7300
www.schneidercorp.com

Architecture
Civil Engineering
Environmental Engineering
Geotechnical Services
GIS * LIS
Home Builder Services
Interior Design
Land Surveying
Landscape Architecture
Transportation Engineering

CENTENNIAL SOUTH EXPANSION
WESTFIELD, INDIANA

ESTRIDGE DEVELOPMENT CO., INC.
CARMEL, INDIANA

DATE:	PROJECT NO.:
06/27/08	3915.004
DRAWN BY: PRC	CHECKED BY: JLF

SHEET TITLE: SANITARY SEWER PLAN

DRAWING FILES:
R:\3K\3915\004\DWGS\C401
XREF: SANITARY
XREF: 004BS
XREF: 3915004S
XREF: R:\3K\3915\001\DWGS\001BS

SHEET NO.: C401

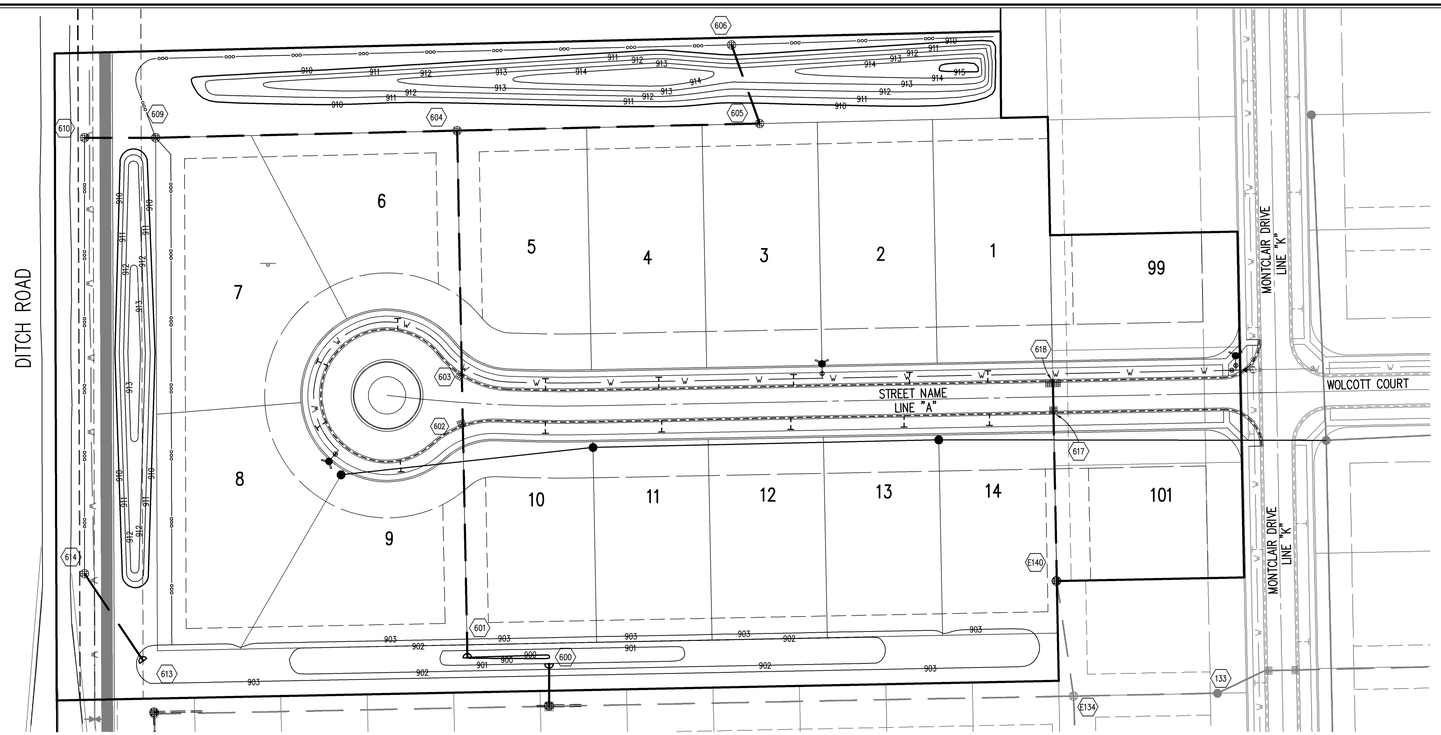

BENCHMARK

BM – U.S.G.S. 93 RHP, BRASS DISK IN A CONCRETE POST AT THE SOUTHWEST CORNER OF 146TH STREET AND DITCH ROAD. ELEVATION = 903.373 (NGVD 1929)

TBM2 – CUT SQUARE ON TOP OF CONCRETE BASE AT THE NORTH SIDE OF CONCRETE FENCE POST, WEST SIDE OF DITCH ROAD, 1320'± SOUTH OF 156TH STREET, ESTABLISHED FROM PREVIOUS JOB #753 (CENTENNIAL). ELEVATION = 916.99 (NGVD 1929)

TBM4 – RAILROAD SPIKE SET 1.0' UP IN THE SOUTH SIDE OF A UTILITY POLE ON THE WEST SIDE OF DITCH ROAD, 267' NORTH OF THE SOUTHWEST CORNER AND 180' SOUTH OF THE NORTHWEST CORNER OF THE SUBJECT TRACT. ELEVATION = 909.51 (NGVD 1929)

HOLEY MOLEY SAYS
"DON'T DIG BLIND"

"IT'S THE LAW"
CALL 2 WORKING DAYS BEFORE YOU DIG
1-800-382-5544
CALL TOLL FREE
PER INDIANA STATE LAW IS-69-1991. IT IS AGAINST THE LAW TO EXCAVATE WITHOUT NOTIFYING THE UNDERGROUND LOCATION SERVICE TWO (2) WORKING DAYS BEFORE COMMENCING WORK.

GENERAL NOTES

1. TEMPORARY TRAFFIC CONTROL DURING CONSTRUCTION TO CONFORM TO APPLICABLE LOCAL AND STATE STANDARDS.
2. ALL CONSTRUCTION ACTIVITY ON THIS SITE TO BE PERFORMED IN COMPLIANCE WITH APPLICABLE O.S.H.A. STANDARDS FOR WORKER SAFETY.
3. IT SHALL BE THE CONTRACTORS RESPONSIBILITY TO FIELD VERIFY ALL UTILITY LOCATIONS BEFORE CONSTRUCTION BEGINS.
4. CONTRACTORS SHALL MINIMIZE DAMAGE TO EXISTING TREES.

LEGEND/DETAILS

Sheet	Detail Number	Description
C805	S-5	Bedding Detail Reinforced Concrete Pipe (RCP)
C805	ST-11&12	Roll Curb Inlet Detail
C805	ST-11&12	Beehive Inlet Detail
C805	ST-1	Storm Manhole Detail
C805	6	Precast Concrete End Section
C801		RipRap Detail @ End Section

NOTE

REVISIONS:

DAVID A. CLARK REGISTERED No. 19300219 STATE OF INDIANA PROFESSIONAL ENGINEER

DATE: 06/27/08

THIS DRAWING AND THE IDEAS, DESIGNS AND CONCEPTS CONTAINED HEREIN ARE THE EXCLUSIVE INTELLECTUAL PROPERTY OF THE SCHNEIDER CORPORATION, AND ARE NOT TO BE USED OR REPRODUCED, IN WHOLE OR IN PART, WITHOUT THE WRITTEN CONSENT OF THE SCHNEIDER CORPORATION.
© COPYRIGHTED BY THE SCHNEIDER CORP. (2008)

STORM SEWER PLAN

SCALE: 1"=50'

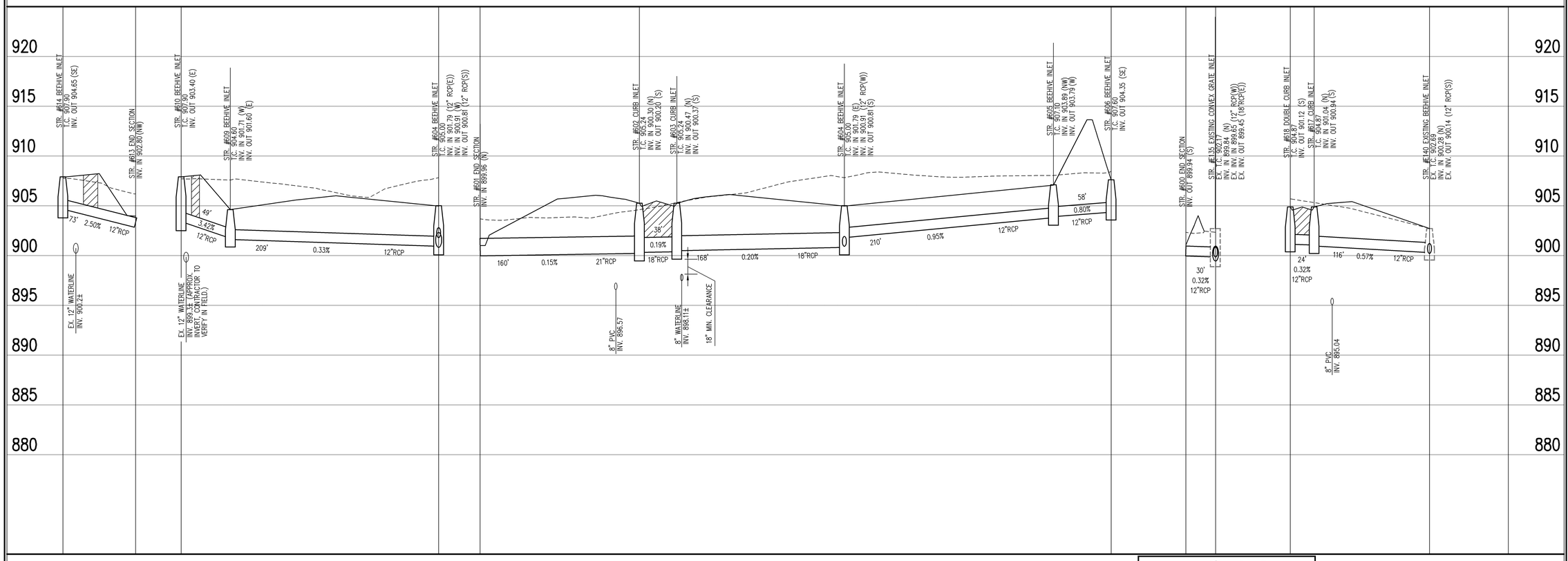

STORM SEWER PROFILE

LEGEND

Existing Grade	New Grade	Granular Backfill

SCALE: HORZ.: 1"=50' / VERT.: 1"=5'

Schneider

THE SCHNEIDER CORPORATION
Historic Fort Harrison
8901 Otis Avenue
Indianapolis, IN 46216-1037
Telephone: 317.826.7100
Fax: 317.826.7300
www.schneidercorp.com

Architecture
Civil Engineering
Environmental Engineering
Geotechnical Services
GIS * LIS
Home Builder Services
Interior Design
Land Surveying
Landscape Architecture
Transportation Engineering

CENTENNIAL SOUTH EXPANSION
WESTFIELD, INDIANA

ESTRIDGE DEVELOPMENT CO., INC.
CARMEL, INDIANA

DATE:	PROJECT NO.:
06/27/08	3915.004
DRAWN BY: PRC	CHECKED BY: JLF

SHEET TITLE: STORM SEWER PLAN

DRAWING FILES:
R:\3K\3915\004\DWGS\C601
XREF: STORM
XREF: 004BS
XREF: 3915004S
XREF: R:\3K\3915\001\DWGS\001BS

SHEET NO.: C601

R:\3K\3915\004\dwgs\C601.dwg, 6/30/2008 12:58:38 PM, KIP 7004.pc3

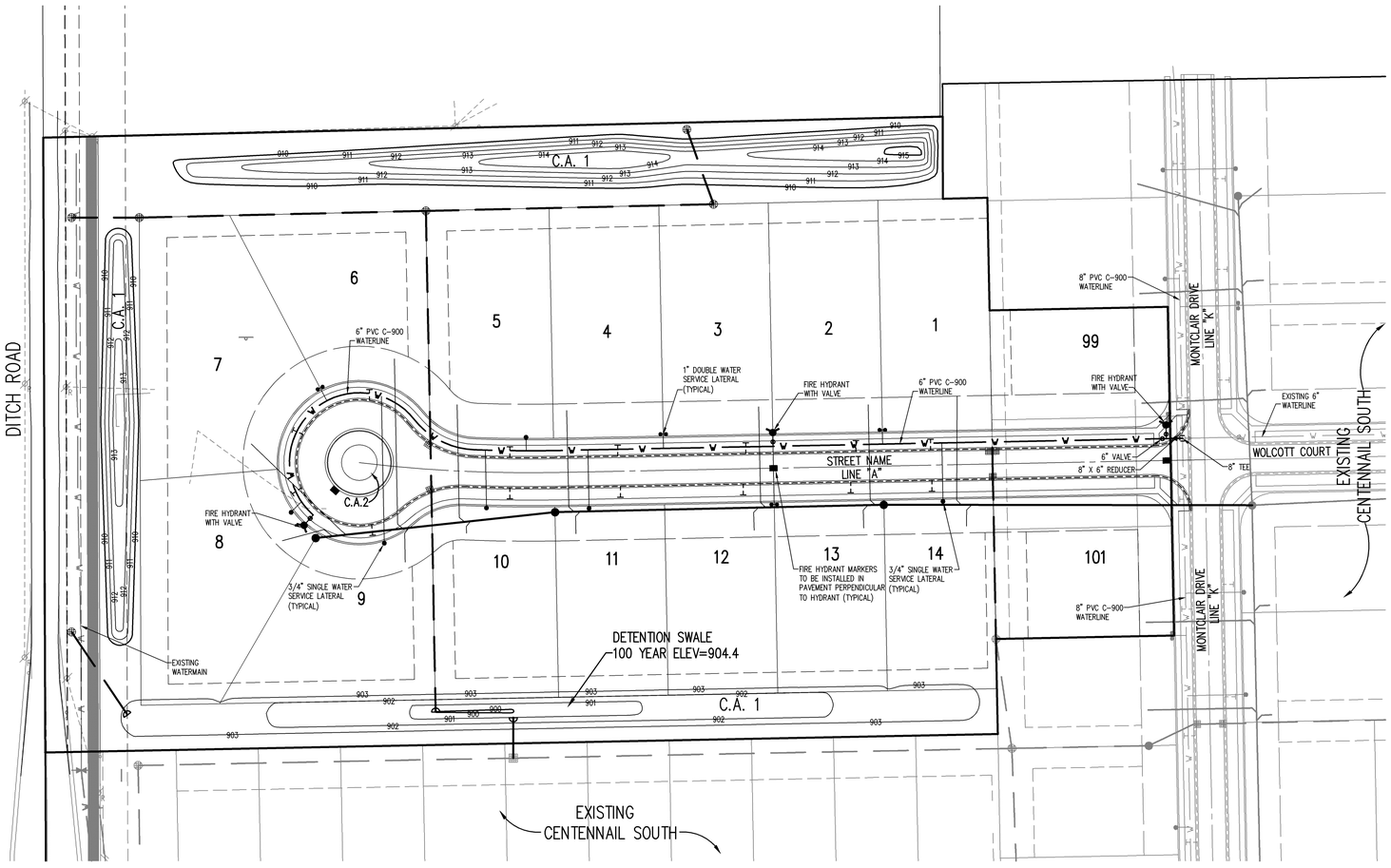

HOLEY MOLEY SAYS
"DON'T DIG BLIND"

"IT'S THE LAW"
CALL 2 WORKING DAYS BEFORE YOU DIG
1-800-382-5544
CALL TOLL FREE
PER INDIANA STATE LAW IS-69-1991. IT IS AGAINST THE LAW TO EXCAVATE WITHOUT NOTIFYING THE UNDERGROUND LOCATION SERVICE TWO (2) WORKING DAYS BEFORE COMMENCING WORK.

ASSUMED NORTH
SCALE: 1"=50'

BENCHMARK

BM – U.S.G.S. 93 RHP, BRASS DISK IN A CONCRETE POST AT THE SOUTHWEST CORNER OF 146TH STREET AND DITCH ROAD.
ELEVATION = 903.373 (NGVD 1929)

TBM2 – CUT SQUARE ON TOP OF CONCRETE BASE AT THE NORTH SIDE OF CONCRETE FENCE POST, WEST SIDE OF DITCH ROAD, 1320'± SOUTH OF 156TH STREET, ESTABLISHED FROM PREVIOUS JOB #753 (CENTENNIAL).
ELEVATION = 916.99 (NGVD 1929)

TBM4 – RAILROAD SPIKE SET 1.0' UP IN THE SOUTH SIDE OF A UTILITY POLE ON THE WEST SIDE OF DITCH ROAD, 267' NORTH OF THE SOUTHWEST CORNER AND 180' SOUTH OF THE NORTHWEST CORNER OF THE SUBJECT TRACT.
ELEVATION = 909.51 (NGVD 1929)

LEGEND

- NEW STORM SEWER
- EXISTING SANITARY SEWER
- EXISTING STORM SEWER
- NEW SANITARY SEWER
- EXISTING WATER MAIN
- NEW WATER MAIN WITH VALVE
- NEW FIRE HYDRANT ASSEMBLY
- TEMPORARY FLUSHING HYDRANT
- REDUCER
- SAMPLE TAP
- 3/4" SERVICE LATERAL WITH METER PIT
- 1" SERVICE LATERAL WITH DOUBLE METER PIT
- FIRE HYDRANT MARKER

GENERAL NOTES

1. WATERLINE TO HAVE A MINIMUM COVER OF 57".
2. WATERLINE LATERALS TO HAVE A 10' HORIZONTAL MINIMUM SEPARATION TO SANITARY LATERALS.
3. ALL WATERLINE ARE TO BE 8" PVC C-900 PIPE UNLESS OTHERWISE NOTED.
4. ALL SERVICE LINES SHALL HAVE SADDLE TAPS.
5. ALL VALVES SHALL HAVE POSI CAPS.
6. ALL HYDRANTS SHALL HAVE 5" STORZ CONNECTIONS (MUELLER MODEL 290220 FOR CASTING AND 290221 CAP OR WPWD APPROVED EQUAL).
7. SERVICE LINES SHALL BE STUBBED 2" BEHIND SIDEWALKS.
8. MAINS SHALL BE BEDDED WITH SAND 6" BELOW THE PIPE AND 12" ABOVE THE PIPE.
9. WATER MAINS SHALL HAVE MARKING TAPE INSTALLED 2' FEET DIRECTLY ABOVE ALL MAINS.
10. ALL MAINS SHALL HAVE #12 GAUGE LOCATING WIRE TAPED TO THE TOP OF THE MAIN AND PULLED THROUGH THE VALVE BOXES TO THE SURFACE FOR LOCATING PURPOSES.
11. ALL DUCTILE IRON PIPE SHALL BE POLY WRAPPED.
12. HYDRANTS SHALL BE PAINTED WITH 2 COATS OF M.A.B. "FIRE PROTECTION RED (7068)" AFTER INSTALLATION.
13. ALL SINGLE WATER SERVICES SHALL BE 3/4" INCH COPPER SERVICES.

REVISIONS:

DAVID A. CLARK
REGISTERED
No. 19300219
STATE OF INDIANA
PROFESSIONAL ENGINEER

DATE: 06/27/08

THIS DRAWING AND THE IDEAS, DESIGNS AND CONCEPTS CONTAINED HEREIN ARE THE EXCLUSIVE INTELLECTUAL PROPERTY OF THE SCHNEIDER CORPORATION, AND ARE NOT TO BE USED OR REPRODUCED, IN WHOLE OR IN PART, WITHOUT THE WRITTEN CONSENT OF THE SCHNEIDER CORPORATION.
© COPYRIGHTED BY THE SCHNEIDER CORP. (2008)

Schneider

THE SCHNEIDER CORPORATION
Historic Fort Harrison
8901 Otis Avenue
Indianapolis, IN 46216-1037
Telephone: 317.826.7100
Fax: 317.826.7200
www.schneidercorp.com

Architecture
Civil Engineering
Environmental Engineering
Geotechnical Services
GIS * LIS
Home Builder Services
Interior Design
Land Surveying
Landscape Architecture
Transportation Engineering

CENTENNIAL SOUTH EXPANSION

WESTFIELD, INDIANA

ESTRIDGE DEVELOPMENT CO., INC.
CARMEL, INDIANA

DATE:	PROJECT NO.:
06/27/08	3915.004
DRAWN BY:	CHECKED BY:
PRC	JLF

SHEET TITLE:
WATER DISTRIBUTION PLAN

DRAWING FILES:
R:\3K\3915\004\DWGS\C701
XREF: 001BS
XREF: 3915004S
XREF: R:\3K\3915\004\DWGS\001BS

SHEET NO.:
C701

R:\3K\3915\004\dwgs\C701.dwg, 8/29/2008 1:00:55 PM, KIP 7004.pc3

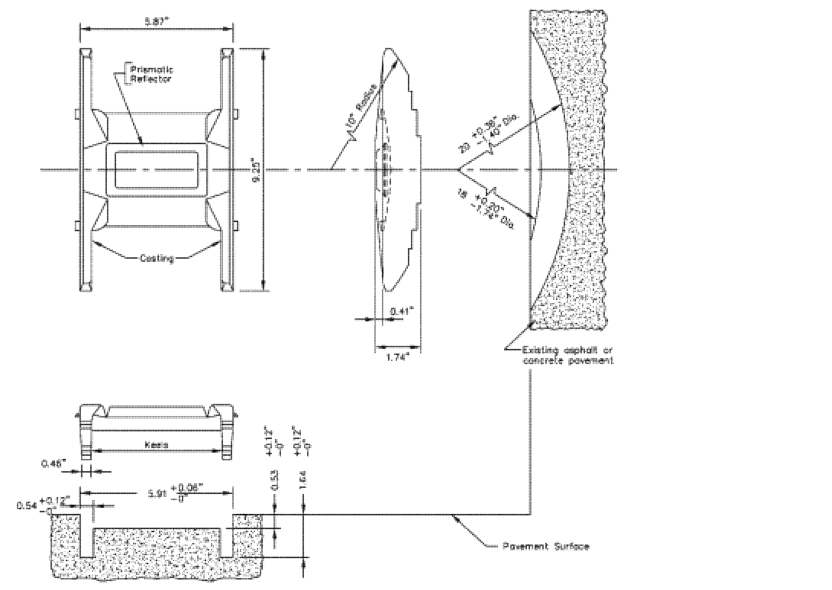

RAISED PAVEMENT MARKERS CAST METAL BASE, TYPE 1

TOWN OF WESTFIELD, INDIANA

Renée Lynn Goff 10/9/06 DATE

FIGURE P-21

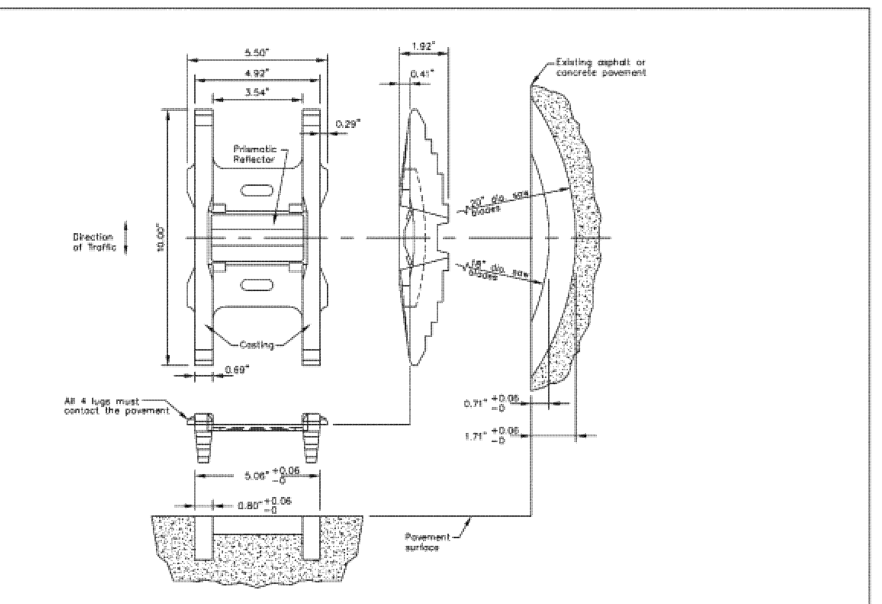

RAISED PAVEMENT MARKERS CAST METAL BASE, TYPE 2

TOWN OF WESTFIELD, INDIANA

Renée Lynn Goff 10/9/06 DATE

FIGURE P-22

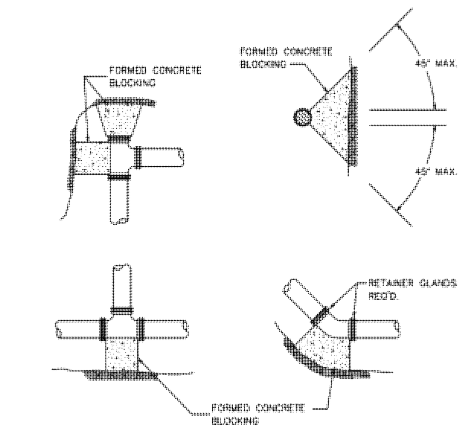

SIZE	TEE & PLUG	90° BEND	45° BEND	22-1/2° BEND	11-1/4° BEND
4"	2.0	2.5	1.5	1.0	1.0
6"	4.0	5.5	3.0	1.5	1.0
8"	6.5	9.0	5.0	2.5	1.5
10"	10.0	14.0	7.5	4.0	2.0
12"	14.0	20.0	11.0	5.5	3.0
14"	19.0	27.0	14.5	7.5	4.0
16"	25.0	35.0	19.0	10.0	5.0
18"	31.5	44.5	24.0	12.5	6.5
20"	40.0	54.0	31.0	16.5	7.5
24"	55.5	78.5	42.5	22.0	11.0
30"	86.5	122.0	66.0	34.0	17.0
36"	124.0	175.5	95.0	48.5	24.5
42"	168.0	237.5	128.5	65.5	33.0
48"	212.0	366.0	160.0	85.0	42.0

(AREA IN SQ. FT. REQUIRED FOR CONCRETE THRUST BLOCKING)

NOTE:
THE THRUST BLOCK AREAS ARE BASED ON A SOIL BEARING LOAD OF 2,000 LB./SQ. FT.

GREASE OR PLACE A LAYER OF VISQUEEN ON ALL WATER MAIN SURFACES PRIOR TO PLACEMENT OF CONCRETE

THRUST BLOCK DETAIL

TOWN OF WESTFIELD, INDIANA

Renée Lynn Goff 10/9/06 DATE

FIGURE W-2

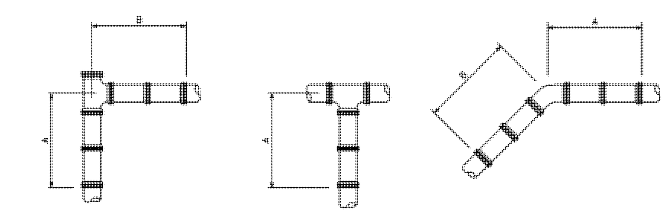

NOTE:
THE LENGTHS OF PIPE WITH RESTRAINED JOINTS ARE BASED ON A COMPACTED SILTY SOIL SURROUNDING THE PIPE

	A		B		
SIZE	TEE & PLUG	90° BEND	45° BEND	22-1/2° BEND	11-1/4° BEND
6"	12'-0"	17'-0"	10'-0"	6'-0"	3'-0"
8"	16'-0"	22'-0"	13'-0"	8'-0"	4'-0"
10"	19'-0"	27'-0"	16'-0"	9'-0"	5'-0"
12"	23'-0"	32'-0"	19'-0"	11'-0"	6'-0"
14"	26'-0"	36'-0"	21'-0"	12'-0"	7'-0"
16"	29'-0"	41'-0"	24'-0"	14'-0"	8'-0"
18"	32'-0"	45'-0"	26'-0"	15'-0"	8'-0"
20"	35'-0"	50'-0"	29'-0"	16'-0"	9'-0"
24"	41'-0"	58'-0"	34'-0"	19'-0"	10'-0"
30"	50'-0"	70'-0"	40'-0"	22'-0"	12'-0"
36"	58'-0"	82'-0"	46'-0"	26'-0"	14'-0"
42"	66'-0"	93'-0"	52'-0"	29'-0"	15'-0"

(LENGTH IN FEET REQUIRED FOR RESTRAINING JOINTS)

RESTRAINED JOINT DETAILS

TOWN OF WESTFIELD, INDIANA

Renée Lynn Goff 10/9/06 DATE

FIGURE W-3

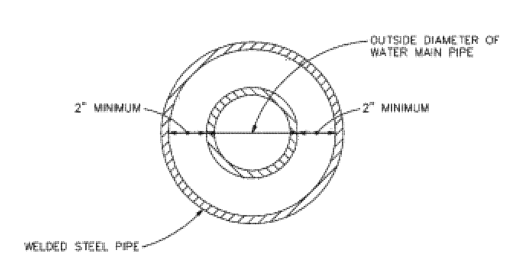

DIAMETER OF CASTING	WALL THICKNESS (INCHES) UNDER HIGHWAY	UNDER RAILROAD
UNDER 14"	0.250	0.188
14"	0.250	0.219
16"	0.250	0.219
18"	0.250	0.250
20"	0.375	0.281
22"	0.375	0.312
24"	0.375	0.344
26"	0.375	0.375
28"	0.500	0.406
30"	0.500	0.406
32"	0.500	0.438
34"	0.500	0.469
36"	0.500	0.469
38"	0.500	0.500
40"	0.500	0.500
42"	0.500	0.500

STEEL CASING DETAIL

TOWN OF WESTFIELD, INDIANA

Renée Lynn Goff 10/9/06 DATE

FIGURE W-4

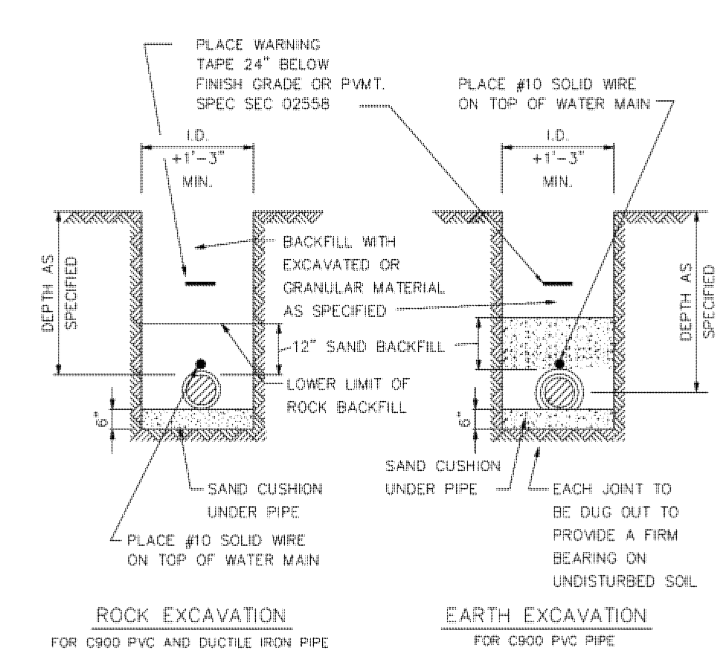

NOTE:
DUCTILE IRON PIPE OR HDPE (D11) PIPE DOES NOT REQUIRE SPECIAL BACKFILL UNLESS DIRECTED ON THE PLANS OR REQUIRED BY THE DIRECTOR OR THIER DESIGNEE.

WATER MAIN INSTALLATION DETAIL

TOWN OF WESTFIELD, INDIANA

Renée Lynn Goff 10/9/06 DATE

FIGURE W-1

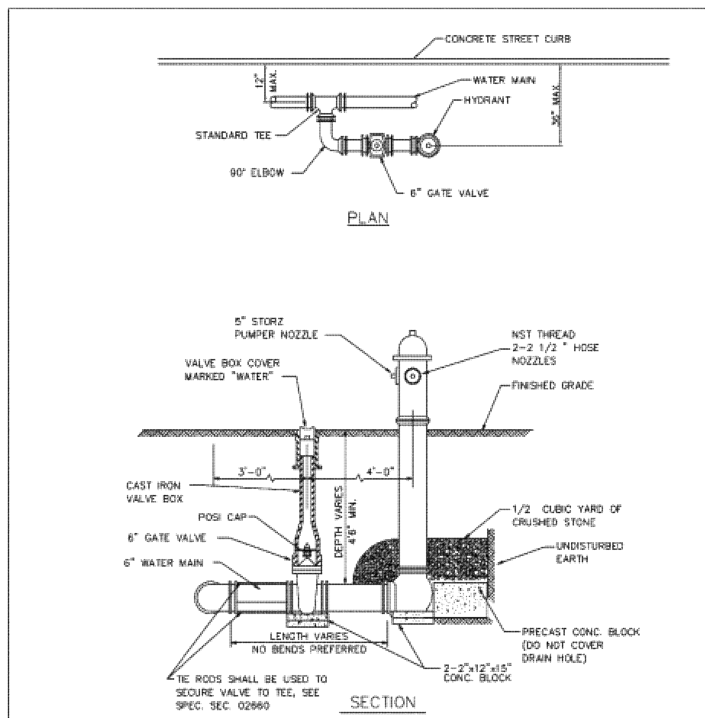

NOTE:
1. HYDRANTS SHALL BE THE MUELLER CENTURION, AS MANUFACTURED BY THE MUELLER CO. OR THE WATEREUS PACER, AS MANUFACTURED BY THE WATEREUS CO.
2. INTEGRAL CAP NUT AND LOWER WASHER SHALL BE EPOXY COATED.
3. SHOE SHALL BE FUSION BONDED EPOXY COATED INSIDE AND OUT.
4. WESTFIELD FIRE HYDRANTS SHALL BE MAB FIRE PROTECTION RED (7068) NOBLESVILLE FIRE HYDRANTS SHALL BE MAB CAUTION YELLOW (7077)

FIRE HYDRANT DETAILS

TOWN OF WESTFIELD, INDIANA

Renée Lynn Goff 10/9/06 DATE

FIGURE W-7

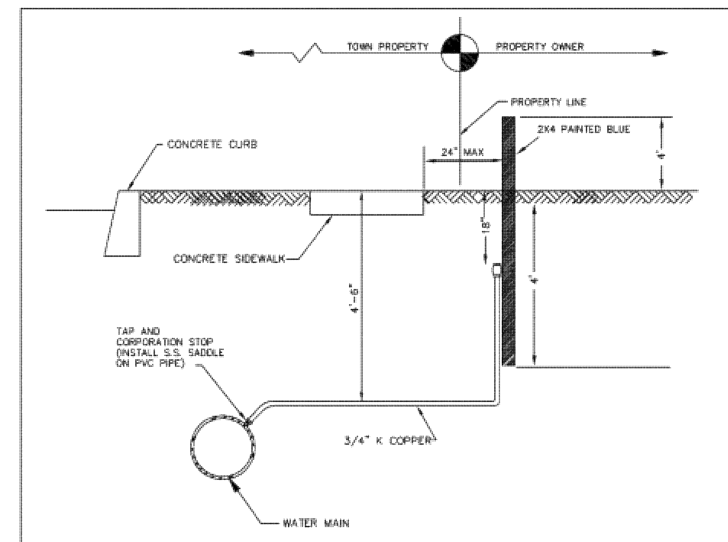

NOTE:
CONTRACTOR SHALL FURNISH AND INSTALL ALL NECESSARY MATERIALS TO PROVIDE A NEW WATER SERVICE. AS SHOWN IN THIS DETAIL

PART NUMBER FOR TERMINATING SERVICE LINE			
PART DESCRIPTION	FORD METER BOX CO.	MUELLER CO.	A.Y. MCDONALD MFG. CO.
ANGLE BALL VALVE	BA94-323-0	B-24273	4642BYQ-¾X02

3/4" SINGLE PIT

TOWN OF WESTFIELD, INDIANA

Renée Lynn Goff 10/9/06 DATE

FIGURE W-8

NOTE:
1. 1" Single Pit K copper laterals will be used insted of 3/4".

NOTE:
1. Water service will be 1" K copper stubbed on the property line for a double meter pit, and 1" K copper for a single pit. Service lines shall be stubbed 2' max but no less than behind sidewalk.
2. Posi caps will be required to be installed on all valves.
3. Fire hydrants shall have five (5) inch Storz connection (Mueller model 290220 for casting and 290221 cap or comparable to and approved by WPWD). Fire hydrants shall be placed a max of three (3) feet behind curb, per direction of the Westfield Fire Department.
4. All public hydrants shall be painted with two (2) coats of M.A.B. "Fire Protection Red (7068)" after installation.
5. Blue Reflectors shall be installed in the centerline of the pavement across from the fire hydrants.

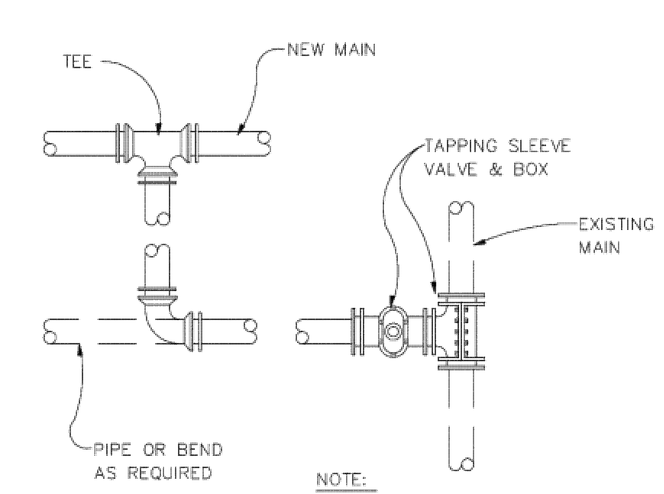

NOTE:
1. BENDS & FITTINGS AS REQUIRED SEE PLAN SHEETS FOR DETAILS
2. SEE FIGURES W-2 & W-3 FOR THRUST BLOCK AND RESTRAINED JOINT DETAILS.

CONNECTION TO EXISTING MAIN

TOWN OF WESTFIELD, INDIANA

Renée Lynn Goff 10/9/06 DATE

FIGURE W-5

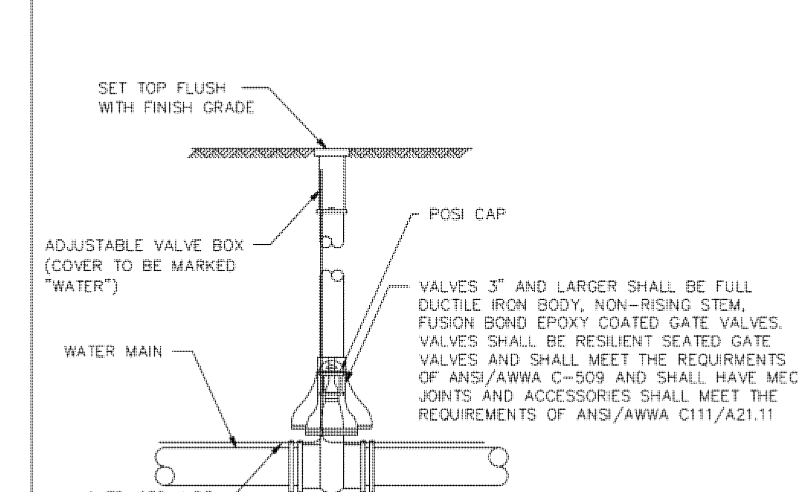

VALVES 3" AND LARGER SHALL BE FULL DUCTILE IRON BODY, NON-RISING STEM, FUSION BOND EPOXY COATED GATE VALVES. VALVES SHALL BE RESILIENT SEATED GATE VALVES AND SHALL MEET THE REQUIRMENTS OF ANSI/AWWA C-509 AND SHALL HAVE MECH. JOINTS AND ACCESSORIES SHALL MEET THE REQUIREMENTS OF ANSI/AWWA C111/A21.11

GATE VALVE AND BOX

TOWN OF WESTFIELD, INDIANA

Renée Lynn Goff 10/9/06 DATE

FIGURE W-6

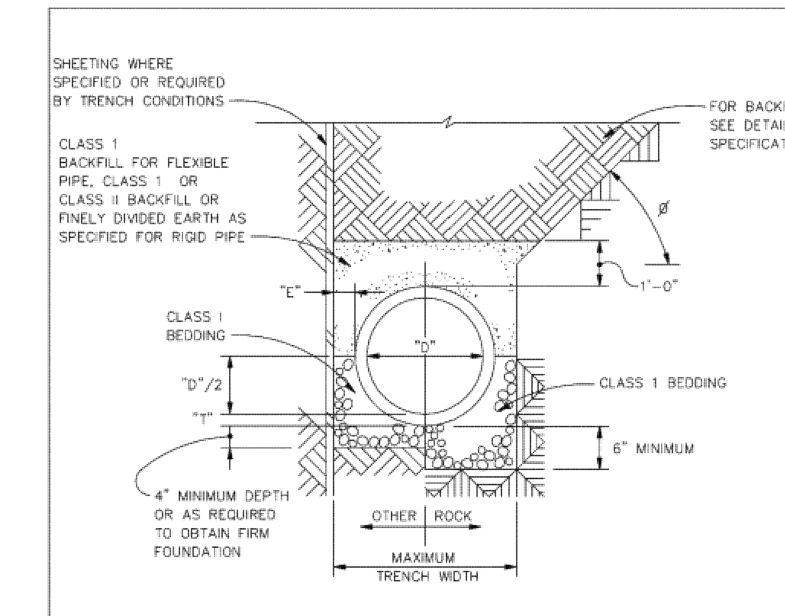

CLASS I BEDDING
TYPICAL SECTIONS IN FIRM FOUNDATIONS

NOTES:
1. SLOPE ANGLE, "ø" ,SHALL BE LESS THAN THE FRICTION ANGLE OF THE EXCAVATED MATERIAL.
2. "D"= NOMINAL PIPE SIZE.
3. "T"= PIPE WALL THICKNESS.

PVC BEDDING DETAIL

TOWN OF WESTFIELD, INDIANA

Renée Lynn Goff 10/9/06 DATE

FIGURE W-14

REVISIONS:

DAVID A. CLARK REGISTERED No. 19300219 STATE OF INDIANA PROFESSIONAL ENGINEER

DATE: 06/27/08

THIS DRAWING AND THE IDEAS, DESIGNS AND CONCEPTS CONTAINED HEREIN ARE THE EXCLUSIVE INTELLECTUAL PROPERTY OF THE SCHNEIDER CORPORATION, AND ARE NOT TO BE USED OR REPRODUCED, IN WHOLE OR IN PART, WITHOUT THE WRITTEN CONSENT OF THE SCHNEIDER CORPORATION.

© COPYRIGHTED BY THE SCHNEIDER CORP. (2008)

Schneider

THE SCHNEIDER CORPORATION
Historic Fort Harrison
8901 Otis Avenue
Indianapolis, IN 46216-1037
Telephone: 317.826.7100
Fax: 317.826.7300
www.schneidercorp.com

Architecture
Civil Engineering
Environmental Engineering
Geotechnical Services
GIS * LIS
Home Builder Services
Interior Design
Land Surveying
Landscape Architecture
Transportation Engineering

CENTENNIAL SOUTH EXPANSION
WESTFIELD, INDIANA

ESTRIDGE DEVELOPMENT CO., INC.
CARMEL, INDIANA

DATE: 06/27/08	PROJECT NO.: 3915.004
DRAWN BY: PRC	CHECKED BY: JLF

SHEET TITLE: WATER DETAILS

DRAWING FILES: R:\5k\3915\004\DWGS\C702

SHEET NO.: C702

R:\3k\3915\004\dwgs\C702.dwg, 6/28/2008 1:51:30 PM, KIP 7204.pc3

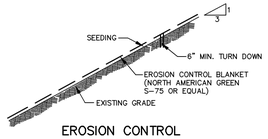

EROSION CONTROL MATTING DETAIL

SCALE: NONE

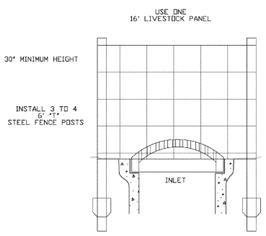

(DRAWING NOT TO SCALE)

INLET TRASH/DEBRIS GUARD

TOWN OF WESTFIELD, INDIANA

Renée Lynn Goff 4/10/06 DATE

FIGURE EC-1

Seedbed Preparation

Apply lime to raise the pH to the level needed for species being seeded. Apply 14 pounds of 12-12-12 analysis fertilizer (or equivalent) per 1000 sq. ft. (approximately 600 pounds per acre) or fertilize according to test. Application of 150 lbs. of ammonium nitrate on areas low in organic matter and fertility will greatly enhance vegetative growth.

Work the fertilizer and lime into the soil to a depth of 2-3 inches with a harrow, disk or rake operated across the slope as much as possible.

Seeding

Select a seed mixture based on projected use of the area (Figure 5-2), while considering best seeding dates. See Figure 5-3 this sheet. If tolerances are a problem, such as salt tolerance of seedings adjacent to streets and highways, see Figure 5-4 this sheet before final selection.

Figure 5-2: Permanent Seed Mixtures

Species	Seeding Rate lbs/acre	Seeding Rate lbs/1000 sq. ft.	Suitable pH	Site Suitability* well Droughty	well Drained	Wet
Temp. Seed for Areas Remaining Idle for more than 1 Yr.)						
1. Perennial Ryegrass	30	.4	5.6-7.0	2	1	
Tall Fescue	30	.7				
Temp. Seed for Areas Remaining Idle for less than 1 yr. but more than 2 weeks.)						
2. Wheat or rye	150	3.5	(if between 8/15 and 10/30)			
3. Spring Oats	100	2.3	(if between 3/1 and 5/15)			
4. Annual Ryegrass	40	1	(if between 4/1 and 9/1)			
Detention Area Banks						
5. Tall Fescue	261	6.0	5.6-7.0	1	1	2
Kentucky Bluegrass	50.0	1.2	5.8-7.5			
Perennial ryegrass	50.0	1.2	5.8-7.5			
Lawns and High Maintenance Areas						
Fine Leafed Perennial Rye Grass	108	2.5	5.6-7.0	1		
Fine Fescue	108	2.5				
Kentucky Bluegrass	108	2.5				

* 1 - Preferred 2 - Will Tolerate ** Inoculate with specific Inoculant.

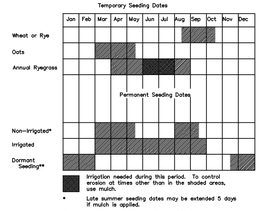

Irrigation needed during this period. To control erosion at times other than in the shaded areas, use mulch.

* Late summer seeding dates may be extended 5 days if mulch is applied.

** Increase seeding application by 50%.

FIGURE 5-3

Temporary Seedings

Kind of Seed	1000 Sq. Ft.	Acre	Remarks
Wheat or Rye	3.5 lbs.	2 bu.	Cover seed 1" to 1 1/2" deep
Spring Oats	2.3 lbs.	3 bu.	Cover seed 1" deep
Annual ryegrass	1 lb.	40 lbs.	Cover seed 1/4"deep*

* Not necessary where mulch is applied.

SEEDING MIXTURE

SCALE: NONE

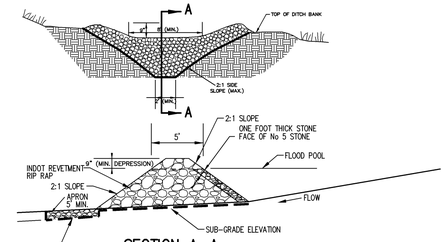

SECTION A-A

STONE CHECK DAM

SCALE: NONE

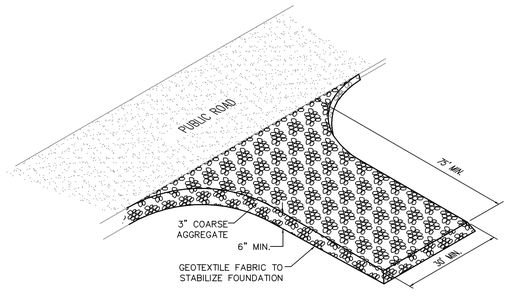

TEMPORARY GRAVEL CONSTRUCTION ENTRANCE

NOT TO SCALE

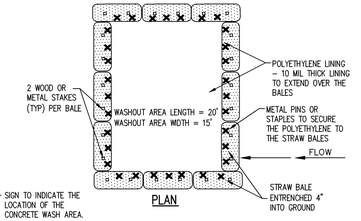

PLAN

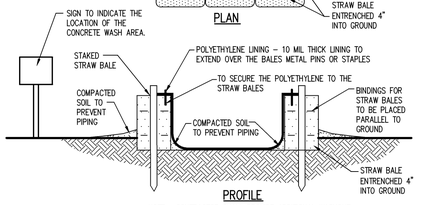

PROFILE

NOTE: CONTRACTOR SHALL PROVIDE ADDITIONAL WASHOUT STRUCTURES OR LARGER STRUCTURES IF REQUIRED

NOTES:
1. CONCRETE WASHOUT AREA SHALL BE INSTALLED PRIOR TO ANY CONCRETE PLACEMENT ON SITE.

2. SIGNS SHALL BE PLACED AT THE CONSTRUCTION ENTRANCE, AT THE WASHOUT AREA, AND ELSEWHERE AS NECESSARY TO CLEARLY INDICATE THE LOCATION OF THE CONCRETE WASHOUT AREA TO OPERATORS OF CONCRETE TRUCKS AND PUMP RIGS.

3. THE CONCRETE WASHOUT AREA SHALL BE REPAIRED AND ENLARGED OR CLEANED OUT AS NECESSARY TO MAINTAIN CAPACITY FOR WASTED CONCRETE.

4. AT THE END OF CONSTRUCTION, ALL CONCRETE SHALL BE REMOVED FROM THE SITE AND DISPOSED OF AT AN APPROVED WASTE SITE.

5. WHEN THE CONCRETE WASHOUT ARE IS REMOVED, THE DISTURBED AREA SHALL BE SEEDED AND MULCHED OR OTHERWISE STABILIZED IN A MANNER APPROVED BY THE INSPECTOR.

ABOVE GROUND CONCRETE WASHOUT AREA

NOT TO SCALE

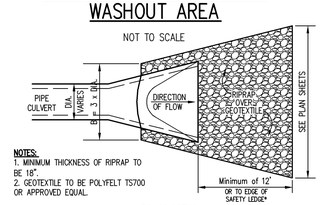

NOTES:
1. MINIMUM THICKNESS OF RIPRAP TO BE 18".
2. GEOTEXTILE TO BE POLYFELT TS700 OR APPROVED EQUAL.

PLAN VIEW

* IF PLAN SHEETS INDICATE MORE RIP RAP YARDAGE THAN DISTANCE FROM PIPE TO SHELF EDGE, CARRY RIP RAP OVER SHELF EDGE.

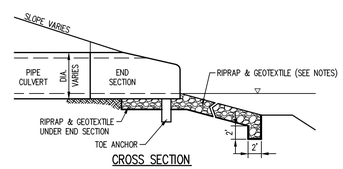

CROSS SECTION

RIPRAP AT END SECTION

NOT TO SCALE

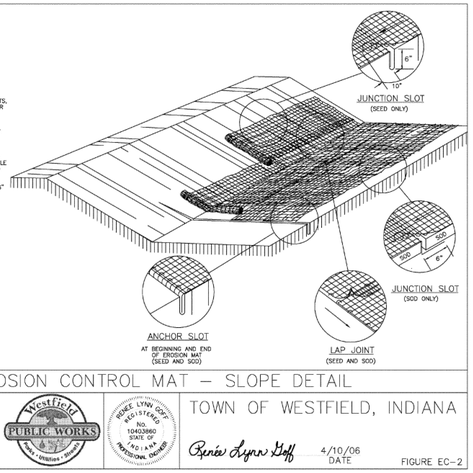

EROSION CONTROL MAT - SLOPE DETAIL

TOWN OF WESTFIELD, INDIANA

Renée Lynn Goff 4/10/06 DATE

FIGURE EC-2

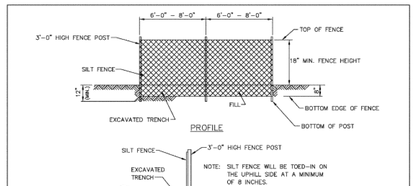

PROFILE

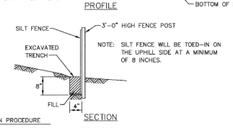

SECTION

INSTALLATION PROCEDURE

1. 2" x 2" X 36" HARDWOOD OR STEEL FENCE POSTS ARE INSTALLED 6' APART (w/ EXTRA STRENGTH FABRIC WITHOUT WIRE BACKING) OR 8' APART (w/ WIRE BACKING), ON A SLIGHT ANGLE TOWARD THE ANTICIPATED RUNOFF SOURCE.
2. A TRENCH 4" WIDE BY 8" DEEP IS DUG ALONG THE UPHILL SIDE OF THE FENCE LINE.
3. THE SILT FENCE IS UNROLLED AND LAID OUT ALONG THE FENCE LINE.
4. A BUILT-IN ATTACHMENT CORD RUNS THROUGHOUT THE FULL LENGTH OF EACH 150 LINEAR FOOT ROLL. ONE END OF THE ROLL HAS APPROXIMATELY 5' OF CORD. THE OTHER END HAS APPROXIMATELY 20" OF CORD. THE END WITH 5' OF CORD IS WRAPPED AROUND THE FIRST POST AND SECURED.
5. THE FENCE IS PULLED TO THE NEXT POST AND A 1.5" SLIT IS MADE IN THE HEM DIRECTLY ABOVE THE CORD. THE CORD IS PULLED OUT OF THE HEM AND PULLED TAUT FROM THE PRECEDING POST AND WRAPPED TWICE AROUND THE POST.
6. THE SLITTING OF THE HEM ON EACH POST IS REPEATED UNTIL THE FINAL POST IS REACHED, AT WHICH TIME THE MATERIAL IS WRAPPED AROUND THE LAST POST AND SECURED WITH THE ENCLOSED CORD.
7. AT THIS TIME THE LOWER 8" OF THE FENCE IS LAID IN THE TRENCH AND CURLED TOWARD THE EROSION SOURCE. THE TRENCH IS THEN BACKFILLED WITH SOIL.

SILT FENCE DETAIL

TOWN OF WESTFIELD, INDIANA

Renée Lynn Goff 4/10/06 DATE

FIGURE EC-4

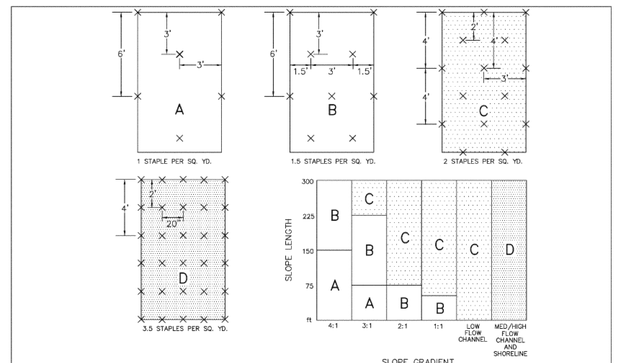

EROSION CONTROL MAT - STAPLE GUIDE

TOWN OF WESTFIELD, INDIANA

Renée Lynn Goff 4/10/06 DATE

FIGURE EC-3

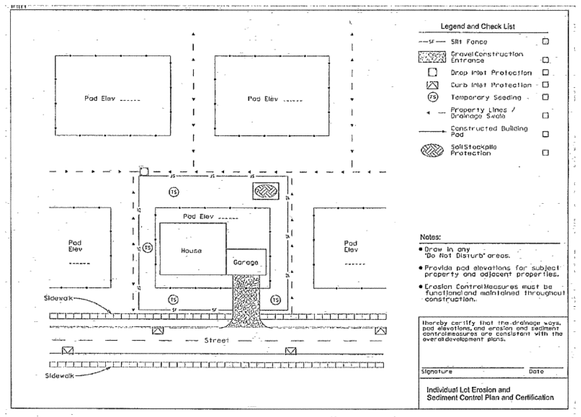

Exhibit 602-J: Individual Lot Typical Erosion & Sediment Control Plan and Certification

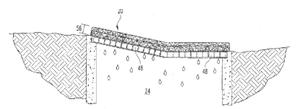

NO SCALE

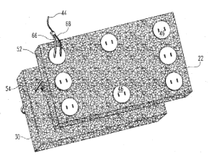

NO SCALE

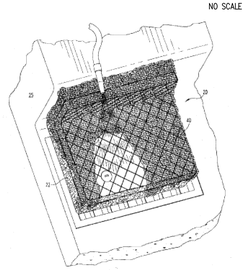

NO SCALE

SEDIGUARD TM

CURB INLET PROTECTION DETAIL

NOTE: 1. SEDIGUARD TM. INLET PROTECTION FROM EARTH SUPPORT SYSTEMS, INC. TO BE USED FOR ALL CURB INLET PROTEXTION.

2. SEDIGUARD TM. SHALL BE INSTALLED TO MANUFACTURE'S SPECIFICATIONS.

REVISIONS:

DAVID A. CLARK REGISTERED No. 19300219 STATE OF INDIANA PROFESSIONAL ENGINEER

DATE: 06/27/08

THIS DRAWING AND THE IDEAS, DESIGNS AND CONCEPTS CONTAINED HEREIN ARE THE EXCLUSIVE INTELLECTUAL PROPERTY OF THE SCHNEIDER CORPORATION, AND ARE NOT TO BE USED OR REPRODUCED, IN WHOLE OR IN PART, WITHOUT THE WRITTEN CONSENT OF THE SCHNEIDER CORPORATION.

© COPYRIGHTED BY THE SCHNEIDER CORP. (2008)

Schneider

THE SCHNEIDER CORPORATION
Historic Fort Harrison
8901 Otis Avenue
Indianapolis, IN 46216-1037
Telephone: 317.826.7100
Fax: 317.826.7300
www.schneidercorp.com

Architecture
Civil Engineering
Environmental Engineering
Geotechnical Services
GIS * LIS
Home Builder Services
Interior Design
Land Surveying
Landscape Architecture
Transportation Engineering

CENTENNIAL SOUTH EXPANSION
WESTFIELD, INDIANA

ESTRIDGE DEVELOPMENT CO., INC.
CARMEL, INDIANA

DATE: 06/27/08	PROJECT NO.: 3915.004
DRAWN BY: PCJ	CHECKED BY: JLF

SHEET TITLE: STORMWATER POLLUTION PREVENTION DETAILS

DRAWING FILES: R:\3k\3915\004\DWGS\C801-C802

SHEET NO.: C801

R:\3k\3915\004\dwgs\C801-C802.dwg, 6/30/2008 1:04:00 PM, KIP 7204.pc3

STORMWATER POLLUTION PREVENTION PLAN INDEX

A1 Plan Index provided below
A2 11"x17" Plat denoting lot numbers, boundaries and streets is provided separately.
A3 Project Type: 15 lot single family subdivision.
A4 Vicinity Map: Denoted on Sheet C100
A5 Legal Description of Project Site: See attached Secondary Plat.
A6 Location of all lots and proposed site improvements: See sheet C101.
A7 14 Digit Hydrologic Unit Code: 05120201090060.
A8 State or Federal water quality permits: N/A
A9 Specific points where stormwater discharge will leave the site: Southern boundary of site into Centennial South Subdivision (see sheet C101–C102 for more detail).
A10 Location of all wetlands, lakes & water courses on and adjacent to site: None.
A11 Receiving Waters: Hinshaw and Henley Drain.
A12 Identification of potential discharges to groundwater: None
A13 100 Year Floodplains, Floodways and Flood Fringes: None
A14 Pre–Construction and Post Construction Peak Discharge:
10year Pre–Construction Peak Discharge – South Property Line = 10.5 cfs
10yr Post Construction Peak Discharge – South Property Line = 3.6 cfs

A15 Adjacent Land Use: See Sheet C100.
North: Industrial
South: Single Family Residential/Open Space
East: Single Family Residential Subdivision
West: Agricultural
A16 Locations and approximate boundaries of all disturbed areas: See Sheet C102.
A17 Identification of existing vegetative cover: See Sheet C102.
A18 Soils Map including descriptions and limitations: See sheet C100 for soils map, description and limitations.
A19 Locations, size and dimensions of proposed stormwater systems: See Site Development Plan Sheet C101 for proposed storm sewer system.
A20 Locations, size and dimensions of any proposed off–site construction activities associated with this project: See Site Development Plan Sheet C101 for any proposed off–site construction activities.
A21 Locations of Soil Stockpiles: See Sheet C102
A22 Existing site topography: See Sheets C101 for existing site topography.
A23 Proposed final topography: See Site Development Plan Sheet C101 for proposed site grading and drainage patterns.

B1 Description of potential pollutants sources associated with the construction activities: Silt and sediment from exposed soils, leaves, mulch, vehicular sources such as leaking fuel or oil, brake fluid, brake dust, trash, debris, biological agents found in trash, fertilizers, herbicides, pesticides, acid rain, lime dust and concrete washout.
B2 Sequencing of stormwater quality implementation relative to land disturbance activities: See Sheet C102–C103.

PRECONSTRUCTION ACTIVITIES:
1. Call the Indiana Underground Plant Protection systems, Inc. ("Holey Moley") at 1–800–382–5544 to check the location of any existing utilities. They should be notified two working days before construction takes place.
2. Review sheet C102 for specific site sequence for Pre–construction and Mass Earthwork.

CONSTRUCTION ACTIVITIES:
1. See Sheets C102.

POST CONSTRUCTION ACTIVITIES:
1. See Sheets C102.

B3 Stable construction entrance location(s) and specifications. See Stormwater Pollution Prevention Plan Sheet C102 for location. See Sheet C801–802 for construction entrance details and specifications.
B4 Sediment control measures for sheet flow areas: See Stormwater Pollution Prevention Plan Sheet C102 for locations of sediment control measures and Sheet C801–802 for construction details and specifications.
B5 Sediment control measures for concentrated flow areas: See Stormwater Pollution Prevention Plan Sheets C102 for locations of sediment control measures and Sheet C801–C802 for construction details and specifications.
B6 Storm sewer inlet protection measures, locations and specifications: See Stormwater Pollution Prevention Plan Sheets C102 for locations of inlet protection measures and Sheet C801–C802 for construction details and specifications.
B7 Runoff control measures: See Stormwater Pollution Prevention Plan Sheet C102 for locations of runoff control measures and Sheet C801–C802 for construction details and specifications.
B8 Stormwater outlet protection specifications: See Stormwater Pollution Prevention Plan Sheet C102 for locations of stormwater outlet control measures and Sheet C801–C802 for construction details and specifications.
B9 Grade stabilization structure locations and specifications: N/A
B10 Location, dimensions, specifications and construction details of each stormwater quality measure: See Stormwater Pollution Prevention Plan Sheet C102 for locations of various stormwater quality measures and Sheet C801–C802 construction details and specifications.
B11 Temporary surface stabilization methods appropriate for each season: See Stormwater Pollution Prevention Plan Sheet C102 for locations of temporary surface stabilization measures and Sheet C801–C802 for construction details and specifications.
B12 Permanent surface stabilization specifications: See Stormwater Pollution Prevention Plan Sheet C102 for locations of permanent surface stabilization measures and Sheet C801–C802 construction details and specifications.

B13 Material handling and spill prevention plan:
Purpose:
The intention of this Spill Prevention, Control and Countermeasures (SPCC) is to establish the procedures and equipment required to prevent the discharge of oil and hazardous substances in quantities that violate applicable water quality standards, cause a sheen upon or discoloration of the surface of navigable waters or adjoining shorelines, or cause sludge or emulsion to be deposited beneath the surface of the water or adjoining shorelines. The Plan also establishes the activities required to mitigate such discharges (i.e., countermeasures) should they occur.
Definitions:
Pollutant: means pollutant of any kind or in any form, including but not limited to sediment, paint, cleaning agents, concrete washout, pesticides, nutrients, trash, hydraulic fluids, fuel, oil, petroleum, fuel oil, sludge, oil refuse, and oil mixed with wastes other than dredged soil.
Discharge:
Includes but is not limited to, any spilling, leaking, pumping, pouring, emitting, emptying, or dumping.
Navigable Waters:
Means all waters of the United States that are connected with a navigable stream, lake, or sea. [Note: This definition is usually interpreted to mean any wastewater (even normally dry wash or storm sewer) that eventually drains into a navigable stream.]
Plan Review and Amendements:
This Plan shall be reviewed and/or amended, if necessary, whenever there is a change in the design of the site, construction, operation, or maintenance which materially affects the site's potential for the discharge of regulated material.
Prediction of Potential Spills:
1. Nearest Navigable Water: Williams Creek
2. Drainage System: All storm drainage leaves the site by open ditches and closed storm systems to the south and east to the Hinshaw and Henley Drain.
3. Possible Spill Sources (During and post construction): Vehicular sources such as leaking fuel or oil, brake fluid, grease, antifreeze; construction trash and debris, biological agents found in trash and debris, fertilizers, household items including but not limited to cleaning agents, chemicals, paint, herbicides and pesticides.
4. Groundwater Contamination:
The facility maintains NO above ground or under ground storage tanks at this site. Therefore, it is felt that there is little or no possibility of post construction groundwater contamination. The facility does have city sanitary sewer and city water.

Alert Procedures for Spills:
1. Any personnel observing a spill will immediately instigate the following procedure:
a.) Dialing "0" from any telephone.
b.) Notify the appropriate emergency personnel.
2. The Emergency Coordinator will then take the following actions:
a.) Barricade the area allowing no vehicles to enter or leave the spill zone.
b.) Notify the Indiana Department of Environmental Management, Office of Emergency Response by calling the appropriate telephone number:
Office 317–233–7745
Toll Free 800–233–7745
Also the National Response Center at 800–424–8802 and provide the following information:
– Time of observation of the spill
– Location of the spill
– Identity of material spilled
– Probable source of the spill
– Probable time of the spill
– Volume of the spill and duration
– Present and anticipated movement of the spill
– Weather conditions
– Personnel at the scene
– Action initiated by personnel
c.) Notify the Westfield Fire Department Phone: 9–1–1
d.) Notify the Westfield Police Department Phone: 9–1–1
e.) Notify waste recovery contractor, maintenance personnel or other contractual personnel as necessary for cleanup.
f.) Coordinate and monitor cleanup until the situation has been stabilized and all spills have been eliminated.
g.) Cooperate with the IDEM–OER on procedures and reports involved with the event.

Cleanup Parameters:
1. The Developer / Homeowners Association shall be continually kept informed, maintain lists of qualified contractors and available Vac–trucks, tank pumpers and other equipment readily accessible for clean–up operations. In addition, a continually updated list of available absorbent materials and clean–up supplies should be kept on site.
2. All maintenance personnel will be made aware of techniques for prevention of spills. They will be informed of the requirements and procedures outlined in this plan. They will be kept abreast of current developments or new information on the prevention of spills and / or necessary alterations to this plan.
3. When spills occur which could endanger human life and this becomes primary concern, the discharge of the life saving protection function will be carried out by the local police and fire departments.
4. Absorbent materials, which are used in cleaning up spilled materials, will be disposed of in a manner subject to the approval of the Indiana Department of Environmental Management.
5. Flushing of spilled material with water will not be permitted unless so authorized by the Indiana Department of Environmental Management.

B14 Monitoring and maintenance guidelines for pollution prevention measures:
Ditch and Stone Check Dam Maintenance Requirements
1. Inspect check dams after each storm event and promptly remove any sediment deposits to insure adequate storage volume for the next rain, taking care not to undermine the stone base.
2. Inspect periodically for deterioration or damage from construction activities and repair/ replace immediately.
3. After the contributing drainage area has been stabilized, remove all check dams and sediment deposits, bring the disturbed area to grade and stabilize it.
Silt Fence Maintenance Requirements
1. Inspect the silt fence periodically and after each storm event.
2. If fence fabric tears, starts to decompose or in any way becomes ineffective, replace the affected portion immediately.
3. Remove deposited sediment when it reaches half the height of the fence at it's lowest point or is causing the fabric to bulge.
4. Take care to avoid undermining the fence during cleanout.
5. After the contributing drainage area has been stabilized, remove the fence and sediment deposits, bring the disturbed area to grade and stabilize it.
Gravelbag Curb Inlet Barrier Maintenance Requirements
1. Inspect frequently for damage by vehicular traffic and repair if necessary.
2. Inspect after each storm event.
3. Remove sediment, without flushing, when it reaches half the height of the barrier.
4. Deposit removed sediment where it will not enter storm sewer drains.
Erosion Control Blanket (Surface Applied) Maintenance Requirements
1. During vegetative establishment, inspect after each storm event for any erosion below the blanket.
2. If any area(s) shows erosion, pull back that portion of the blanket covering it, re–seed the area and relay and staple the blanket.
3. After vegetative establishment check the treated area periodically.
Temporary Gravel Construction Entrance Maintenance Requirements
1. Inspect entrance pad and sediment disposal area weekly and after storm events or heavy use.
2. Reshape as needed for drainage and runoff control.
3. Topdress with clean stone as needed.
4. Immediately remove mud and sediment tracked or washed onto streets by brushing or sweeping. Flushing should only be used if the water is conveyed into a sediment trap or basin.
5. Repair any broken road pavement immediately.

B15 Erosion & sediment control specifications for individual building lots: See Sheet C801 for Construction details and specifications for erosion & sediment control on individual building lots.

C1 Description of pollutants and their sources associated with the proposed land use: Silt and sediment from exposed soils, leaves, mulch, vehicular sources such as leaking fuel or oil, brake fluid, brake dust, grease, antifreeze, metals, rubber fragments, road grit, salts and sands, construction trash and debris, fertilizers, household items including but not limited to cleaning agents, chemicals, paint, miscellaneous home improvement materials, toys, clothing and animal waste, elevated storm runoff temperatures, acid rain pesticides and pathogens.
C2 Sequence describing stormwater quality measure implementation:
1. Inspect and maintain all erosion control measures as detailed in the Stormwater Pollution Prevention Measures Maintenance Requirements beginning immediately after installation and continuing until vegetation has been sufficiently established and all construction activity is complete.
2. Remove all individual inlet protection and check dams, silt fences, etc. only after seeding and sufficient vegetative growth has been established in each area to a point where sediment/pollutants will not enter the lake(s) or storm sewer system. (70% cover)
3. Inspection and maintenance of all common areas and infrastructure improvements is the responsibility of the owner/developer or his designee until improvements are accepted for maintenance by homeowners association or local agencies.
4. Inspection and maintenance of individual lots is the responsibility of the home builder or his designee until the homeowner buys and thereby accepts responsibility for the individual lot.
C3 Description of proposed post construction stormwater quality measures: Site and facility design for stormwater quality protection on this site employs a multi–level strategy including
1. Reducing or eliminating post–project runoff.
2. Controlling sources of pollutants.
3. And treating (in detention ponds) contaminated stormwater runoff before discharging it into the storm sewer system or receiving waters.
Typical stormwater quality measures for reducing, eliminating or controlling pollutants (source controls) include:
a. Dention/Retention devices: The first flush will be detained in the post construction phase in permanent detention ponds allowing sediment and pollutants to drop out before runoff leaves the site.
b. Reducing Runoff or Direct runoff from impervious areas. Runoff from larger events will be detained by engineered outlets that reduce the maximum outflow in the 100–year frequency storm event.
c. Vegetated strips and/or swales: All runoff from rear yards will flow through the lawn and then a vegetated swale before it enters the storm sewer system.
d. Permanent erosion control seeding and plantings: Any vegetation removed from existing wooded areas that will remain will be replaced with seed mixture appropriate for steep banks.
e. Outlet protection & velocity dissipation devices: Rip rap at inlet pipes flowing into the detention/ retention ponds and at structures leaving the site will reduce runoff velocity.
f. Mulching: All permanent seed will be mulched to reduce sedimentation until vegetation is established. It is the intent of this plan that the implementation of the above described storm water quality measures be executed in accordance with the enclosed plans and details in order to meet the requirements of Rule 5 storm water quality.
C4 Location, dimensions, specifications and construction details of stormwater quality measures: See Stormwater Pollution Prevention Plan Sheet C102 for locations of permanent stormwater quality measures and Sheet C801–802 construction details and specifications.
C5 Description of maintenance guidelines for proposed water quality measures: See attached BMP Operations and Maintenance Manual.

ADDITIONAL STORMWATER POLLUTION PREVENTION MEASURES

VEHICLE & EQUIPMENT MAINTENANCE

Description and Purpose

Prevent or reduce the contamination of stormwater resulting from vehicle and equipment maintenance by running a "dry and clean site". The best option would be to perform maintenance activities at an offsite facility. If this option is not available then work should be performed in designated areas only, while providing cover for materials stored outside, checking for leaks and spills, and containing and cleaning up spills immediately.

Suitable Applications

These procedures are suitable on all construction projects where an onsite yard area is necessary for storage and maintenance of heavy equipment and vehicles.

Limitations

Onsite vehicle and equipment maintenance should only be used where it is impractical to send vehicles and equipment offsite for maintenance and repair. Sending vehicles/equipment offsite should be done in conjunction with a Stabilized Construction Entrance/Exit. Outdoor vehicle or equipment maintenance is a potentially significant source of stormwater pollution. Activities that can contaminate stormwater include engine repair and service, changing or replacement of fluids, and outdoor equipment storage and parking (engine fluid leaks).

Implementation

If maintenance must occur onsite, use designated areas, located away from drainage courses. Dedicated maintenance areas should be protected from stormwater runon and runoff, and should be located at least 50 ft from downstream drainage facilities and watercourses.

Drip pans or absorbent pads should be used during vehicle and equipment maintenance work that involves fluids, unless the maintenance work is performed over an impermeable surface in a dedicated maintenance area.

Place a stockpile of spill cleanup materials where it will be readily accessible.

All fueling trucks and fueling areas are required to have spill kits and/or use other spill protection devices.

Use adsorbent materials on small spills. Remove the absorbent materials promptly and dispose of properly.

Inspect onsite vehicles and equipment daily at startup for leaks, and repair immediately.

Keep vehicles and equipment clean; do not allow excessive build–up of oil and grease.

Segregate and recycle wastes, such as greases, used oil or oil filters, antifreeze, cleaning solutions, automotive batteries, hydraulic and transmission fluids. Provide secondary containment and covers for these materials if stored onsite.

Train employees and subcontractors in proper maintenance and spill cleanup procedures.

Drip pans or plastic sheeting should be placed under all vehicles and equipment placed on docks, barges, or other structures over water bodies when the vehicle or equipment is planned to be idle for more than 1 hour.

Properly dispose of used oils, fluids, lubricants, and spill cleanup materials.

Do not place used oil in a dumpster or pour into a storm drain or watercourse.

Properly dispose of or recycle used batteries.

Do not bury used tires.

Repair leaks of fluids and oil immediately.

Listed below is further information if you must perform vehicle or equipment maintenance onsite.

Inspection and Maintenance

Inspect and verify that BMPs are in place prior to the commencement of associated activities. While activities associated with the BMP are under way, inspect weekly to verify continued BMP implementation.

Keep ample supplies of spill cleanup materials onsite.

Maintain waste fluid containers in leak proof condition.

Vehicles and equipment should be inspected on each day of use. Leaks should be repaired immediately or the problem vehicle(s) or equipment should be removed from the project site.

Inspect equipment for damaged hoses and leaky gaskets routinely. Repair or replace as needed.

VEHICLE AND EQUIPMENT FUELING

Description and Purpose

Vehicle equipment fueling procedures and practices are designed to prevent fuel spills and leaks, and reduce or eliminate contamination of stormwater. This can be accomplished by using offsite facilities, fueling in designated areas only, enclosing or covering stored fuel, implementing spill controls, and training employees and subcontractors in proper fueling procedures.

Limitations

Onsite vehicle and equipment fueling should only be used where it is impractical to send vehicles and equipment offsite for fueling. Sending vehicles and equipment offsite should be done in conjunction with a Stabilized Construction Entrance/ Exit.

Implementation

Use offsite fueling stations as much as possible. These businesses are better equipped to handle fuel and spills properly. Performing this work offsite can also be economical by eliminating the need for a separate fueling area at a site.

Discourage "topping–off" of fuel tanks.

Absorbent spill cleanup materials and spill kits should be available in fueling areas and on fueling trucks, and should be disposed of properly after use.

Drip pans or absorbent pads should be used during vehicle and equipment fueling, unless the fueling is performed over an impermeable surface in a dedicated fueling area.

Use absorbent materials on small spills. Do not hose down or bury the spill. Remove the adsorbent materials promptly and dispose of properly.

Avoid mobile fueling of mobile construction equipment around the site; rather, transport the equipment to designated fueling areas.

Train employees and subcontractors in proper fueling and cleanup procedures.

Dedicated fueling areas should be protected from stormwater runon and runoff, and should be located at least 50 ft away from downstream drainage facilities and watercourses. Fueling must be performed on level–grade areas.

Protect fueling areas with berms and dikes to prevent runon, runoff, and to contain spills.

Nozzles used in vehicle and equipment fueling should be equipped with an automatic shutoff to control drips. Fueling operations should not be left unattended.

Federal, state, and local requirements should be observed for any stationary above ground storage tanks.

Inspection and Maintenance

Vehicles and equipment should be inspected each day of use for leaks. Leaks should be repaired immediately or problem vehicles or equipment should be removed from the project site.

Keep ample supplies of spill cleanup materials onsite.

Immediately clean up spills and properly dispose of contaminated soil and cleanup materials.

SOLID WASTE MANAGEMENT

Description and Purpose

Solid waste management procedures and practices are designed to prevent or reduce the discharge of pollutants to stormwater from solid or construction waste by providing designated waste collection areas and containers, arranging for regular disposal, and training employees and subcontractors.

Suitable Applications

This BMP is suitable for construction sites where the following wastes are generated or stored:

Solid waste generated from trees and shrubs removed during land clearing, demolition of existing structures (rubble), and building construction

Packaging materials including wood, paper, and plastic

Scrap or surplus building materials including scrap metals, rubber, plastic, glass pieces and masonry products

Domestic wastes including food containers such as beverage cans, coffee cups, paper bags, plastic wrappers, and cigarettes

Construction wastes including brick, mortar, timber, steel and metal scraps, pipe and electrical cuttings, nonhazardous equipment parts, styrofoam and other materials send transport and package construction materials

Implementation

The following steps will help keep a clean site and reduce stormwater pollution:

Select designated waste collection areas onsite.

Inform trash–hauling contractors that you will accept only watertight dumpsters for onsite use.

Inspect dumpsters for leaks and repair any dumpster that is not watertight.

Provide an adequate number of containers with lids or covers that can be placed over the container to keep rain out or to prevent loss of wastes when it is windy.

Plan for additional containers and more frequent pickup during the demolition phase of construction.

Collect site trash daily, especially during rainy and windy conditions.

Remove this solid waste promptly since erosion and sediment control devices tend to collect litter.

Make sure that toxic liquid wastes (used oils, solvents, and paints) and chemicals (acids, pesticides, additives, curing compounds) are not disposed of in dumpsters designated for construction debris.

Do not hose out dumpsters on the construction site. Leave dumpster cleaning to the trash hauling contractor.

Arrange for regular waste collection before containers overflow.

Clean up immediately if a container does spill.

Make sure that construction waste is collected, removed, and disposed of only at authorized disposal areas.

Collection, Storage, and Disposal

Littering on the project site should be prohibited.

To prevent clogging of the storm drainage system, litter and debris removal from drainage grates, trash racks, and ditch lines should be a priority.

Trash receptacles should be provided in the contractor's yard, field trailer areas, and at locations where workers congregate for lunch and break periods.

Litter from work areas within the construction limits of the project site should be collected and laced in watertight dumpsters at least weekly, regardless of whether the litter was generated by he contractor, the public, or others. Collected litter and debris should not be placed in or next to drain inlets, stormwater drainage systems, or watercourses.

Dumpsters of sufficient size and number should be provided to contain the solid waste generated by the project.

Full dumpsters should be removed from the project site and the contents should be disposed of by the trash hauling contractor.

Construction debris and waste should be removed from the site biweekly or more frequently as needed.

Construction material visible to the public should be stored or stacked in an orderly manner.

Stormwater runon should be prevented from contacting stored solid waste through the use of berms, dikes, or other temporary diversion structures or through the use of measures to elevate waste from site surfaces.

Solid waste storage areas should be located at least 50 ft from drainage facilities and watercourses and should not be located in areas prone to flooding or ponding.

INSPECTION AND MAINTENANCE

Inspect and verify that activity–based BMPs are in place prior to the commencement of associated activities. While activities associated with the BMP are under way, inspect weekly to verify continued BMP implementation.

Inspect BMPs subject to non–stormwater discharge daily while non–stormwater discharges occur

Inspect construction waste area regularly.

Arrange for regular waste collection.

CONCRETE WASHOUT

The following steps will help reduce stormwater pollution from concrete wastes:

Discuss the concrete management techniques described in this BMP (such as handling of concrete waste and washout) with the ready–mix concrete supplier before any deliveries are made.

Incorporate requirements for concrete waste management into material supplier and subcontractor agreements.

Store dry and wet materials under cover, away from drainage areas.

Avoid mixing excess amounts of fresh concrete.

Perform washout of concrete trucks offsite or in designated areas only.

Do not wash out concrete trucks into storm drains, open ditches, streets, or streams.

Do not allow excess concrete to be dumped onsite, except in designated areas.

For onsite washout:
– Locate washout area at least 50 feet from storm drains, open ditches, or water bodies.
– Do not allow runoff from this area by constructing a temporary pit or bermed area large enough for liquid and solid waste.
– Wash out wastes into the temporary pit where the concrete can set, be broken up, and then disposed properly.
– Avoid creating runoff by draining water to a bermed or level area when washing concrete to remove fine particles and expose the aggregate.
– Do not wash sweepings from exposed aggregate concrete into the street or storm drain. Collect and return sweepings to aggregate base stockpile or dispose in the trash.

DEWATERING AND PUMPING OPERATIONS

Description and Purpose

Dewatering operations are practices that manage the discharge of pollutants when non–stormwaters and accumulated precipitation must be removed from a work location so that construction work may be accomplished.

Suitable Applications

These practices are implemented for discharges of nonstormwater from construction sites. Non–stormwaters include, but are not limited to, groundwater, water from cofferdams, water diversions, and waters used during construction activities that must be removed from a work area. Practices identified in this section are also appropriate for implementation when managing the removal of accumulated precipitation(stormwater) from depressed areas at a construction site.

Limitations

Site conditions will dictate design and use of dewatering operations. The controls discussed in this best management practice (BMP) address sediment only. The controls detailed in this BMP only allow for minimal settling time for sediment particles. Use only when site conditions restrict the use of the other control methods. Dewatering operations will require, and must comply with, applicable local permits.

Implementation

Dewatering discharges must not cause erosion at the discharge point. A variety of methods can be used to treat water during dewatering operations. Several devices are presented below and provide options to achieve sediment removal. The size of particles present in the sediment and Permit or receiving water limitations on sediment are key considerations for selecting sediment treatment option(s); in some cases, the use of multiple devices may be appropriate.

Gravity Bag Filter

Description:
A gravity bag filter, also referred to as a dewatering bag, is a square or rectangular bag made of non–woven geotextile fabric that collects sand, silt, and fines.

Appropriate Applications:
Effective for the removal of sediments (gravel, sand, and silt). Some metals are removed with the sediment.

Implementation:
Water is pumped into one side of the bag and seeps through the bottom and sides of the bag.

A secondary barrier, such as a rock filter bed or straw/hay bale barrier, is placed beneath and beyond the edges of the bag to capture sediments that escape the bag.

Maintenance:
Inspection of the flow conditions, bag condition, bag capacity, and the secondary barrier is required.

Replace the bag when it no longer filters sediment or passes water at a reasonable rate.The bag is disposed of offsite.

DANDY DEWATERING BAG™

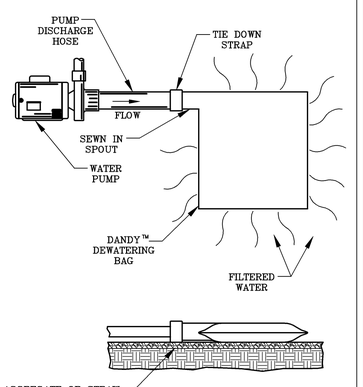

DETAIL OF A DEWATERING BAG

DANDY DEWATERING BAG™ SPECIFICATIONS

NOTE: THE DANDY DEWATERING BAG™ WILL BE **MANUFACTURED IN THE U.S.A.** FROM A NONWOVEN POLYPROPYLENE FABRIC THAT MEETS OR EXCEEDS THE FOLLOWING SPECIFICATIONS:

DANDY DEWATERING BAG™

Mechanical Properties	Test Method	Units	MARV
Grab Tensile Strength	ASTM D 4632	kN (lbs)	0.9 (205) x 0.9 (205)
Grab Tensile Elongation	ASTM D 4632	%	50 x 50
Puncture Strength	ASTM D 4833	kN (lbs)	0.58 (130)
Mullen Burst Strength	ASTM D 3786	kPa (psi)	2618 (380)
Trapezoid Tear Strength	ASTM D 4533	kN (lbs)	0.36 (80) X 0.36 (80)
UV Resistence	ASTM D 4355	%	70
Apparent Opening Size	ASTM D 4751	Mm (US Std Sieve)	0.180 (80)
Flow Rate	ASTM D 4491	l/min/m² (gal/min/ft²)	3866 (95)
Permittivity	ASTM D 4491	Sec⁻¹	1.2

EVALUATION FOR CONSTRUCTION PROJECTS

A trained individual shall perform a written evaluation of the project site.
a. By the end of the next business day following each rainfall that exceeds 0.5"
b. A minimum of one (1) time per week

Project Name: Centennial South Expansion

Name of Trained Individual: _____ Date of Inspection: _____
Is this Evaluation following a rainfall ____ Yes ____ No If yes, date the rain stopped: _____ Inches

No.	PROBLEM or CONCERN	YES	NO	N/A
1.	Is the site information posted at the entrance?			
2.	Are all necessary permits attained and special provisions being implemented?			
3.	Is a construction entrance installed? Is it effective? Is it enough			
4.	Public and private streets are clean?			
5.	Are appropriate practices installed where stormwater leaves the site?			
6.	Silt fence is entrenched into the ground?			
7.	Silt fence is upright? Fabric and stakes meet specifications? Fabric is not to torn?			
	Terminated to higher ground? Property joined at ends?			
8.	Sediment basins and traps are installed according to the plan? The pipe or rock spillway is functional?			
9.	The earthwork for erosion and sediment control practices is properly graded, seeded and/or mulched?			
10.	Diversions swales and/or waterbars are installed to plan and protected?			
11.	Perimeter practices have adequate capacity and do not need to be cleaned out?			
12.	Inlet protection is installed on all functional inlets? (not filter fabric under grate)			
13.	Inlet protection is installed so water does not flow under it?			
14.	The frame, cross–bracing and/or stakes are adequate and meet specifications?			
15.	The fabric, straw, mulch and/or stone is intact without holes or tears?			
16.	Catch basin insert protection is installed where required?			
17.	Sediment has been removed from the practice?			
18.	Swales and ditches have been stabilized or protected?			
19.	Stormwater outlets are adequately stabilized?			
20.	Temporary stabilization of distributed ground has been addressed?			
21.	Disturbed areas that will lie dormant for 15 days are planned to be protected?			
22.	All protected dormant areas meet a minimum 70% coverage			
23.	Growing vegetation has sufficient water and/or nutrients to grow?			
24.	Permanent stabilization of disturbed ground is progressing through the project?			
25.	Final grading and stabilization is progressing on completed areas?			
26.	The soil has been properly prepared for seeding?			
27.	Hard or soft armoring is installed where natural vegetation will erode?			
28.	Water pumping operations have a protected outlet and discharge water is clear?			
29.	A designated washout is established for concrete trucks?			
30.	A dumpster is onsite for trash disposal?			
31.	Fuel tanks and other toxic materials are safely stored and protected?			
32.	Smaller construction sites not required to file a separate NOI are complying with the overall plan?			
33.				
34.				

ALL PROBLEMS OR CONCERNS NEED TO BE ADDRESSED WITH A CORRECTIVE ACTION

Identify the problem by number and/or provide additional explanation as needed.

Developer Representative contacted, name and date: _____ Date: _____

Contractor Representative contacted, name and date: _____ Date: _____

Report Submitted by: _____ Date: _____

PROJECT:		DR. BY:
CITY/STATE:	DATE:	DR. NO:

REVISIONS:

DAVID A CLARK REGISTERED No. 19300219 STATE OF INDIANA PROFESSIONAL ENGINEER

DATE: 06/27/08

THIS DRAWING AND THE IDEAS, DESIGNS AND CONCEPTS CONTAINED HEREIN ARE THE EXCLUSIVE INTELLECTUAL PROPERTY OF THE SCHNEIDER CORPORATION, AND ARE NOT TO BE USED OR REPRODUCED, IN WHOLE OR IN PART, WITHOUT THE WRITTEN CONSENT OF THE SCHNEIDER CORPORATION.
© COPYRIGHTED BY THE SCHNEIDER CORP.(2008)

Schneider
THE SCHNEIDER CORPORATION
Historic Fort Harrison
8901 Otis Avenue
Indianapolis, IN 46216–1037
Telephone: 317.826.7100
Fax: 317.826.7300
www.schneidercorp.com

Architecture
Civil Engineering
Environmental Engineering
Geotechnical Services
GIS * LIS
Home Builder Services
Interior Design
Land Surveying
Landscape Architecture
Transportation Engineering

CENTENNIAL SOUTH EXPANSION
WESTFIELD, INDIANA

ESTRIDGE DEVELOPMENT CO., INC.
CARMEL, INDIANA

DATE: 06/27/08	PROJECT NO.: 3915.004
DRAWN BY: PCJ	CHECKED BY: JLF

SHEET TITLE: STORMWATER POLLUTION PREVENTION NOTES

DRAWING FILES: R:\3k\3915\004\DWGS\C801–C802

SHEET NO.: C802

R:\3k\3915\004\dwgs\C801–C802.dwg, 6/30/2008 1:04:33 PM, KIP 7204.pc3

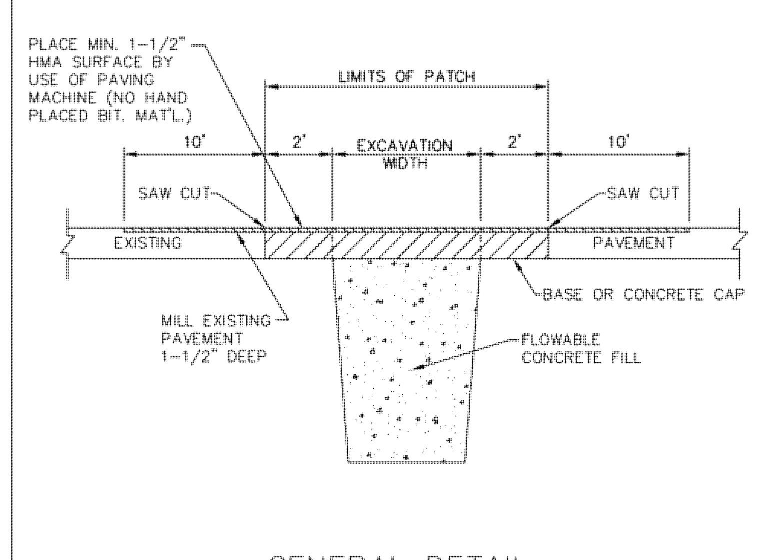

GENERAL DETAIL

NOTES:
1. SAW CUT 1/3 PAVEMENT THICKNESS THEN BREAK OUT.

NOT TO SCALE

REPAIR CUTS WITHIN PAVEMENT LIMITS

TOWN OF WESTFIELD, INDIANA

Renée Lynn Goff 10/9/06 DATE FIGURE P-18

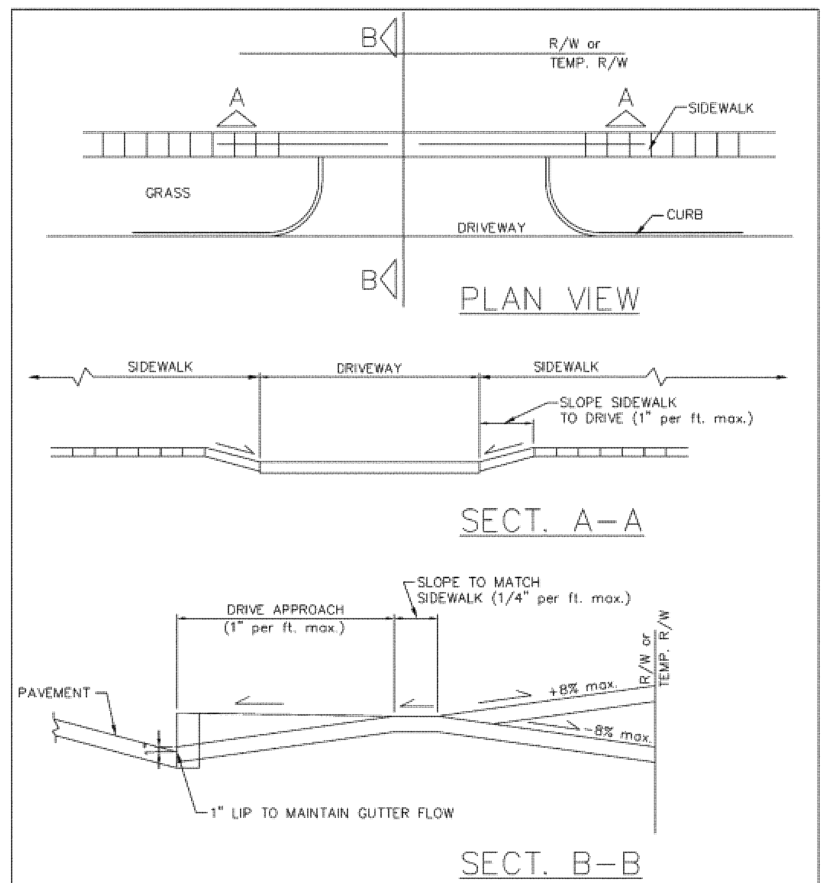

TYPICAL DRIVEWAY SECTION

TOWN OF WESTFIELD, INDIANA

Renée Lynn Goff 10/9/06 DATE FIGURE P-17

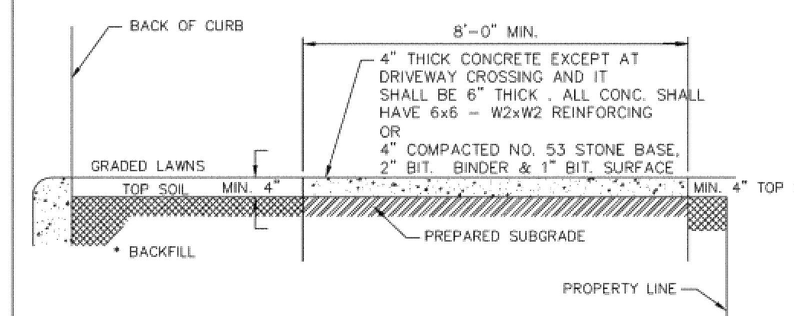

TYPICAL PATH SECTION
NOT TO SCALE

* THE SPACE BEHIND THE CURB SHALL BE FILLED WITH SUITABLE MATERIAL TO THE REQUIRED ELEVATION AND COMPACTED IN LAYERS NOT TO EXCEED 6" IN DEPTH.

SUBGRADE UNDER ALL CURBS, SIDEWALKS, PATHS AND DRIVES SHALL BE COMPACTED IN ACCORDANCE WITH I.N.D.O.T. SPECIFICATIONS.

SEE SECTION 02502 (STANDARDS FOR ROADWAY CONSTRUCTION) FOR DETAILED DISCRIPTION OF BICYCLE/JOGGING PATH CONSTRUCTION

BICYCLE/JOGGING PATH DETAIL

TOWN OF WESTFIELD, INDIANA

Renée Lynn Goff 10/9/06 DATE FIGURE P-16

SIGN MATERIALS
BLANK: 9" EXTRUDED ALUMINUM, 4-HOLE PUNCH FOR YPA HARDWARE
BACKGROUND: HIGH INTENSITY GREEN REFLECTIVE ASTM TYPE III
STREET NAME LETTERS: WHITE REFLECTIVE ASTM TYPE III 6" C OR B SERIES
STREET NAME SUFFIX: WHITE REFLECTIVE ASTM TYPE III 3" C OR B SERIES
BORDER: NO BORDER

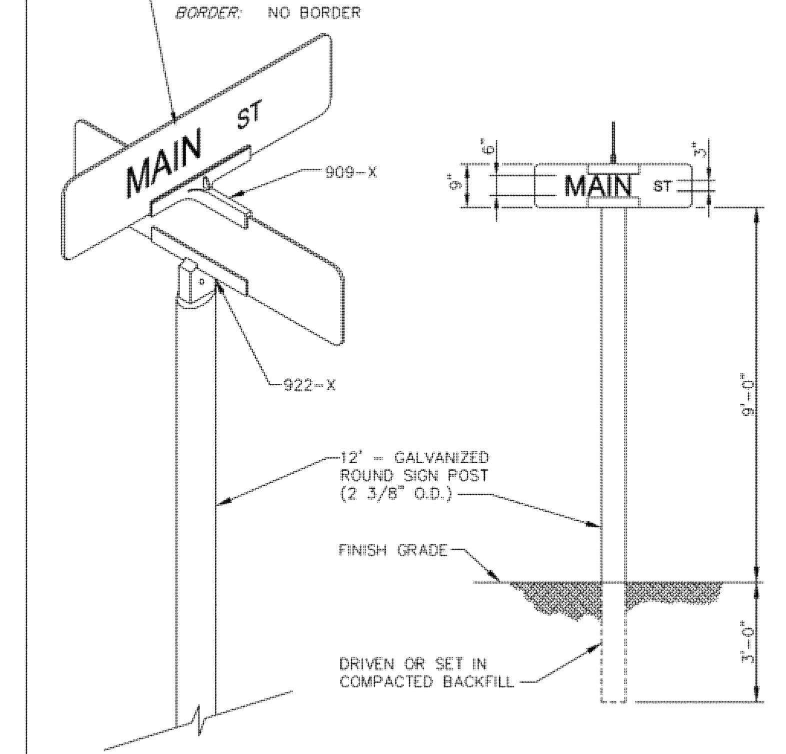

STREET SIGN DETAIL

TOWN OF WESTFIELD, INDIANA

Renée Lynn Goff 10/9/06 DATE FIGURE P-15

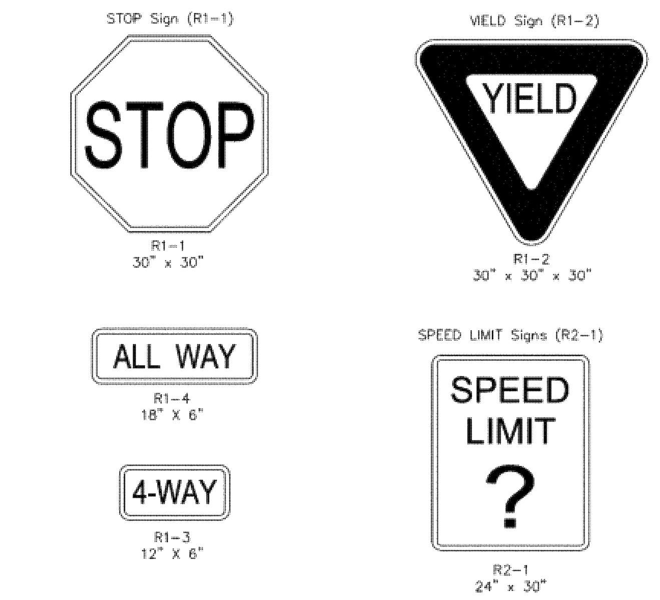

NOTES:
1. SIGNS SHALL BE SINGLE FACED WITH HIGH INTENSITY REFLECTORIZED SHEETING ON 0.080" THICK ALUMINUM SHEET MATERIAL PER INDOT STANDARD SPECIFICATION 912.10.
2. POSTS SHALL BE 11'-0" LONG, 3lb/ft GALVANIZED CHANNEL SIGN POST PER INDOT STANDARD SPECIFICATION 909.14.
3. ALL SIGN SIZES, SHAPES, COLORS AND MATERIAL SHALL MEET THE INDIANA MANUAL ON UNIFORM TRAFFIC CONTROL DEVICES.

TYPICAL SUBDIVISION REGULATORY SIGNS

TOWN OF WESTFIELD, INDIANA

Renée Lynn Goff 10/9/06 DATE FIGURE P-15.1

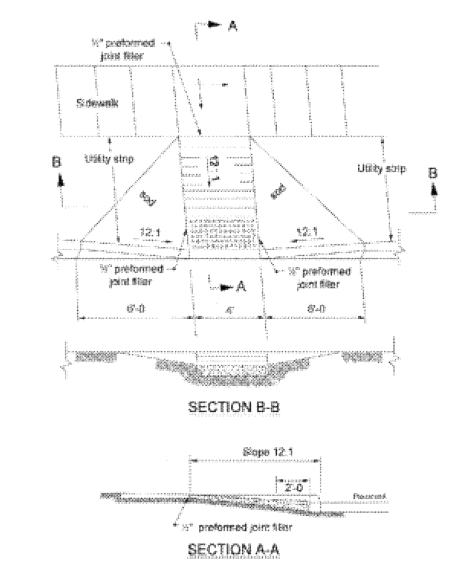

SIDEWALK RAMP FOR HANDICAPPED

TOWN OF WESTFIELD, INDIANA

Renée Lynn Goff 10/9/06 DATE FIGURE P-11A

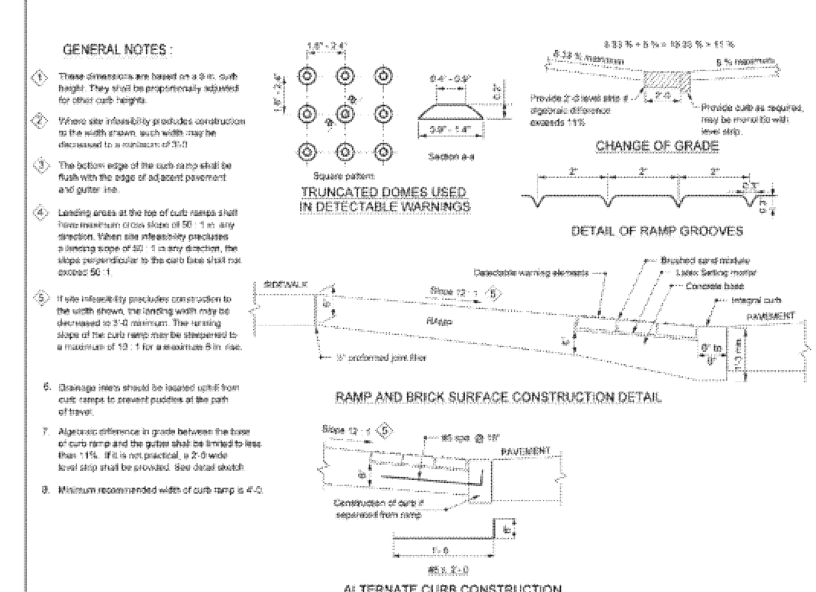

SIDEWALK RAMP FOR HANDICAPPED

TOWN OF WESTFIELD, INDIANA

Renée Lynn Goff 10/9/06 DATE FIGURE P-11

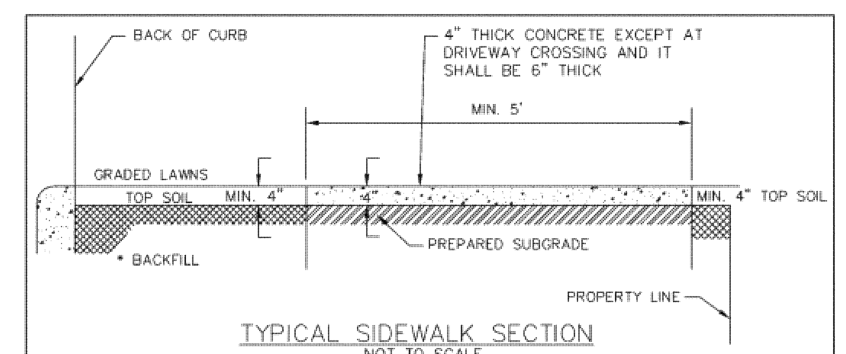

TYPICAL SIDEWALK SECTION
NOT TO SCALE

* THE SPACE BEHIND THE CURB SHALL BE FILLED WITH SUITABLE MATERIAL TO THE REQUIRED ELEVATION AND COMPACTED IN LAYERS NOT TO EXCEED 6" IN DEPTH.

SUBGRADE UNDER ALL CURBS, SIDEWALKS, AND DRIVES SHALL BE COMPACTED IN ACCORDANCE WITH I.N.D.O.T. SPECIFICATIONS.

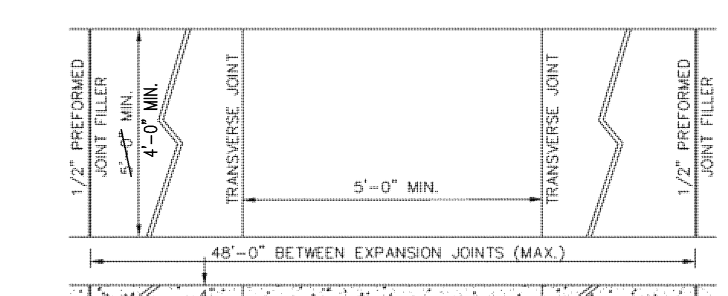

CONCRETE SIDEWALK
NOT TO SCALE

SIDEWALK DETAILS

TOWN OF WESTFIELD, INDIANA

Renée Lynn Goff 10/9/06 DATE FIGURE P-10

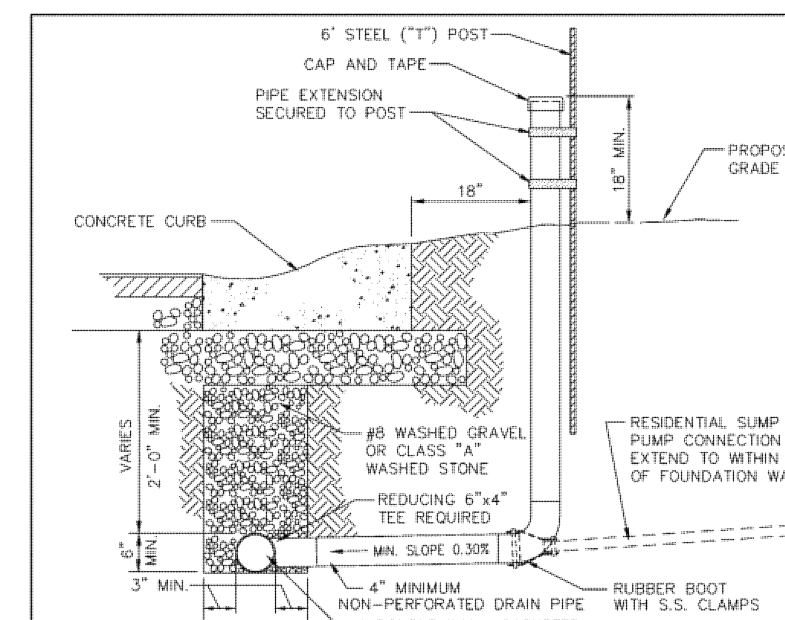

NOTE:
1. PIPE EXTENSION TO BE SECURED TO STEEL POST IN 2 LOCATIONS.
2. TEMPORARY PIPE EXTENSION ABOVE GROUND TO BE REMOVED UPON CONNECTION TO HOUSE.
3. ALL MEASUREMENTS TO BE MEASURED FROM BACK OF CURB.
4. IF PIPE EXTENSION IS NOT UTILIZED, IT IS TO BE CAPPED BELOW GROUND LEVEL.
5. LATERAL LOCATIONS SHALL BE STAMPED ON CURB.
6. MATERIALS AND INSTALLATION SHALL MEET THE INDOT STANDARDS AS SPECIFIED IN SECTION 718 "UNDERDRAINS"
7. SEE STREET DETAILS TO DETERMINE IF TILE IS PERFORATED OR NON PERFORATED.

UNDERDRAIN DETAIL

TOWN OF WESTFIELD, INDIANA

Renée Lynn Goff 10/9/06 DATE FIGURE P-9

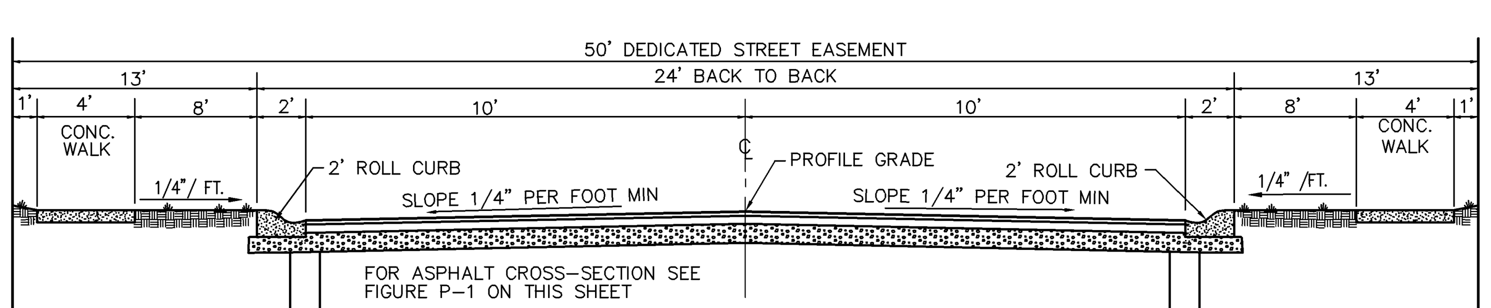

● PREPARED SUBGRADE PER INDIANA DEPARTMENT OF TRANSPORTATION SPECS. No. 207

TYPICAL STREET SECTION 24' STREET (1/C803)

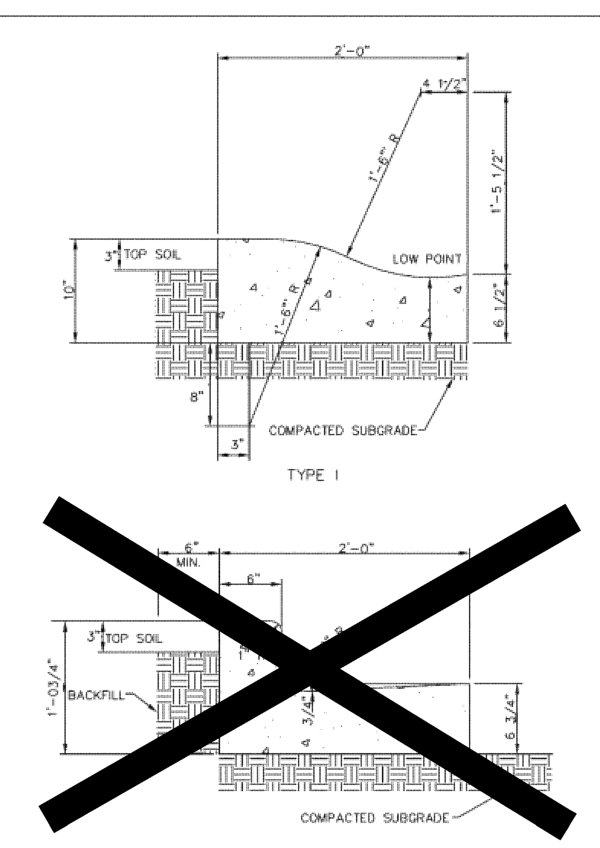

CONCRETE CURB AND GUTTER TYPE I & II

TOWN OF WESTFIELD, INDIANA

Renée Lynn Goff 10/9/06 DATE FIGURE P-8

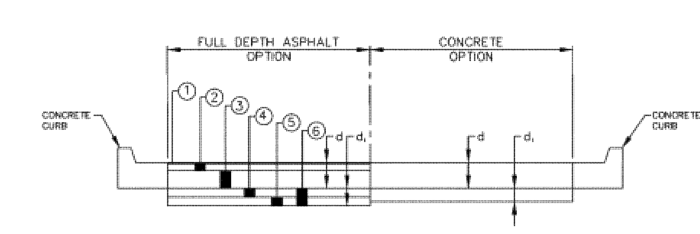

LOCAL STREETS

	ASPHALT (d+d1 =6"+9"=15")	ASPHALT ALTERNATIVE (d+d1 =6"+ 8"=14")	CONCRETE (d+d =6"+ 6"=12")
1	1" SURFACE #11 OR #12	1" SURFACE #11 OR #12	d=5 1/2" CONCRETE ON...
2	5" BINDER #9	4" BINDER #9	d =4" COMP. AGGR. (SIZE 53)
3	4" BASE #50	N.A.	
4	N.A.	N.A.	
5	N.A.	6" COMP. AGGR. (SIZE No. 53)	
6	8" COMP. AGGR. (SIZE No. 53)	12" LIME TREATED * SUBBASE	

* LIME MODIFICATION SHALL BE BETWEEN 3% AND 6% BY WEIGHT WITH THE SOIL TEMPERATURE 45° OR ABOVE MEASURED 4"(100mm) BELOW THE SUBGRADE SURFACE WITH THE AIR TEMPERATURE RISING. ALL IN ACCORDANCE WITH THE LATEST AMENDED VERSION OF THE INDIANA DEPARTMENT OF TRANSPORTATION'S SPECIAL PROVISION FOR LIME MODIFICATION.

NOTE: * DEPTH OF CONCRETE GUTTER SHALL EQUAL DEPTH OF CONCRETE PAVEMENT.

TYPICAL PAVEMENT SECTIONS

TOWN OF WESTFIELD, INDIANA

Renée Lynn Goff 10/9/06 DATE FIGURE P-1

REVISIONS:

DAVID A. CLARK REGISTERED No. 19300219 STATE OF INDIANA PROFESSIONAL ENGINEER

DATE: 06/27/08

THIS DRAWING AND THE IDEAS, DESIGNS AND CONCEPTS CONTAINED HEREIN ARE THE EXCLUSIVE INTELLECTUAL PROPERTY OF THE SCHNEIDER CORPORATION, AND ARE NOT TO BE USED OR REPRODUCED, IN WHOLE OR IN PART, WITHOUT THE WRITTEN CONSENT OF THE SCHNEIDER CORPORATION.

© COPYRIGHTED BY THE SCHNEIDER CORP. (2008)

Schneider

THE SCHNEIDER CORPORATION
Historic Fort Harrison
8901 Otis Avenue
Indianapolis, IN 46216-1037
Telephone: 317.826.7100
Fax: 317.826.7300
www.schneidercorp.com

Architecture
Civil Engineering
Environmental Engineering
Geotechnical Services
GIS * LIS
Home Builder Services
Interior Design
Land Surveying
Landscape Architecture
Transportation Engineering

CENTENNIAL SOUTH EXPANSION
WESTFIELD, INDIANA

ESTRIDGE DEVELOPMENT CO., INC.
CARMEL, INDIANA

DATE: 06/27/08	PROJECT NO.: 3915.004
DRAWN BY: PRC	CHECKED BY: JLF

SHEET TITLE: GENERAL DETAILS

DRAWING FILES: R:\3k\3915\004\DWGS\C804-C805

SHEET NO.: C803

R:\3k\3915\004\dwgs\C803-C805.dwg, 6/30/2008 1:07:37 PM, KIP 7204.pc3

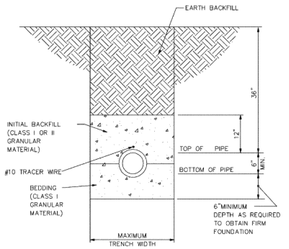

NOTES:

1. NOMINAL PIPE SIZE. (6" MIN.)
2. INSTALLATION OF FLEXIBLE PVC PIPE SHALL BE IN ACCORDANCE WITH SPECIFICATIONS CONTAINED IN ASTM D-2321
3. CLASS I GRANULAR MATERIAL SHALL BE 1/4" TO 1 1/2" GRADED STONE, PER ASTM D2321 (#8 CRUSH STONE)
4. CLASS II GRANULAR MATERIAL SHALL BE COARSE SANDS AND GRAVELS MAX. PARTIAL SIZE OF 3/4"
5. SEE FIGURE S-5 FOR MAIN LINE SEWERS PIPE BEDDING DETAILS.
6. #10 TRACER WIRE TO BE EXTENDED FROM SEWER MAIN TO 6" CLEANOUT RISER

HOUSE/BUILDING SERVICE
BEDDING DETAILS

TOWN OF WESTFIELD, INDIANA

10/9/06 DATE

FIGURE S-12

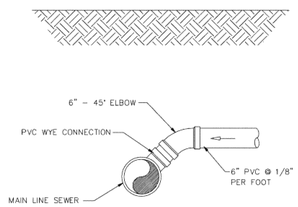

SECTIONAL VIEW

HOUSE/BUILDING SERVICE
CONNECTION DETAIL 2

TOWN OF WESTFIELD, INDIANA

10/9/06 DATE

FIGURE S-11

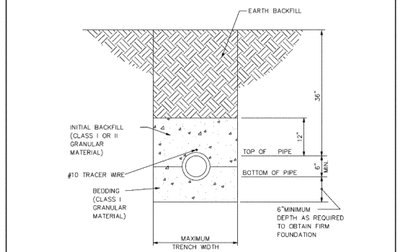

NOTES:

1. NOMINAL PIPE SIZE. (6" MIN.)
2. INSTALLATION OF FLEXIBLE PVC PIPE SHALL BE IN ACCORDANCE WITH SPECIFICATIONS CONTAINED IN ASTM D-2321
3. CLASS I GRANULAR MATERIAL SHALL BE 1/4" TO 1 1/2" GRADED STONE, PER ASTM D2321 (#8 CRUSH STONE)
4. CLASS II GRANULAR MATERIAL SHALL BE COARSE SANDS AND GRAVELS MAX. PARTIAL SIZE OF 3/4"
5. SEE FIGURE S-5 FOR MAIN LINE SEWERS PIPE BEDDING DETAILS.
6. #10 TRACER WIRE TO BE EXTENDED FROM SEWER MAIN TO 6" CLEANOUT RISER

HOUSE/BUILDING SERVICE
BEDDING DETAILS

TOWN OF WESTFIELD, INDIANA

10/9/06 DATE

FIGURE S-12

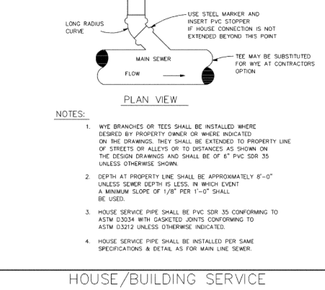

PLAN VIEW

NOTES:

1. WYE BRANCHES OR TEES SHALL BE INSTALLED WHERE DESIRED BY PROPERTY OWNER OR WHERE INDICATED ON THE DRAWINGS. THEY SHALL BE EXTENDED TO PROPERTY LINE OF STREETS OR ALLEYS OR TO DISTANCES AS SHOWN ON THE DESIGN DRAWINGS AND SHALL BE OF 6" PVC SDR 35 UNLESS OTHERWISE SHOWN.
2. DEPTH AT PROPERTY LINE SHALL BE APPROXIMATELY 8'-0" UNLESS SEWER DEPTH IS LESS, IN WHICH EVENT A MINIMUM SLOPE OF 1/8" PER 1'-0" SHALL BE USED.
3. HOUSE SERVICE PIPE SHALL BE PVC SDR 35 CONFORMING TO ASTM D3034 WITH GASKETED JOINTS CONFORMING TO ASTM D3212 UNLESS OTHERWISE INDICATED.
4. HOUSE SERVICE PIPE SHALL BE INSTALLED PER SAME SPECIFICATIONS & DETAIL AS FOR MAIN LINE SEWER.

HOUSE/BUILDING SERVICE
CONNECTION DETAIL 1

TOWN OF WESTFIELD, INDIANA

10/9/06 DATE

FIGURE S-10

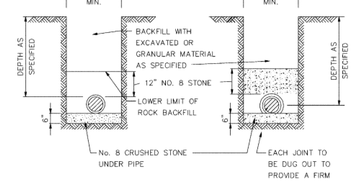

ROCK EXCAVATION EARTH EXCAVATION

NOTE:
THIS DETAIL SHALL APPLY TO ALL SANITARY SEWER PIPE

SEWER PIPE BEDDING DETAIL

TOWN OF WESTFIELD, INDIANA

10/9/06 DATE

FIGURE S-5

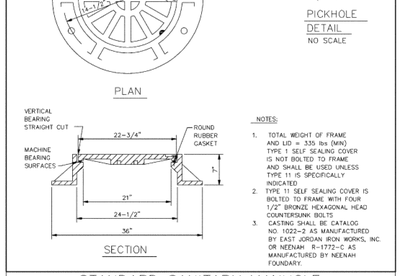

SECTION

NOTES:

1. TOTAL WEIGHT OF FRAME AND LID = 335 lbs (MIN) TYPE 1 SELF SEALING COVER IS NOT BOLTED TO FRAME AND SHALL BE USED UNLESS TYPE 11 IS SPECIFICALLY INDICATED
2. TYPE 11 SELF SEALING COVER IS BOLTED TO FRAME WITH FOUR 1/2" BRONZE HEXAGONAL HEAD COUNTERSUNK BOLTS
3. CASTING SHALL BE CATALOG NO. 1022-2 AS MANUFACTURED BY EAST JORDAN IRON WORKS, INC. OR NEENAH R-1772-C AS MANUFACTURED BY NEENAH FOUNDARY.

STANDARD SANITARY MANHOLE
FRAME AND COVER DETAILS

TOWN OF WESTFIELD, INDIANA

10/9/06 DATE

FIGURE S-3

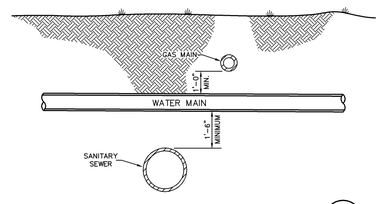

TYPICAL UTILITY CROSSING (1 / C804)

REVISIONS:

DAVID A. CLARK REGISTERED No. 19300219 STATE OF INDIANA PROFESSIONAL ENGINEER

DATE: 06/27/08

THIS DRAWING AND THE IDEAS, DESIGNS AND CONCEPTS CONTAINED HEREIN ARE THE EXCLUSIVE INTELLECTUAL PROPERTY OF THE SCHNEIDER CORPORATION, AND ARE NOT TO BE USED OR REPRODUCED, IN WHOLE OR IN PART, WITHOUT THE WRITTEN CONSENT OF THE SCHNEIDER CORPORATION.

© COPYRIGHTED BY THE SCHNEIDER CORP.(2008)

Schneider

THE SCHNEIDER CORPORATION
Historic Fort Harrison
8901 Otis Avenue
Indianapolis, IN 46216-1037
Telephone: 317.826.7100
Fax: 317.826.7300
www.schneidercorp.com

Architecture
Civil Engineering
Environmental Engineering
Geotechnical Services
GIS • LIS
Home Builder Services
Interior Design
Land Surveying
Landscape Architecture
Transportation Engineering

CENTENNIAL SOUTH EXPANSION
WESTFIELD, INDIANA

ESTRIDGE DEVELOPMENT CO., INC.
CARMEL, INDIANA

DATE: 06/27/08	PROJECT NO.: 3915.004
DRAWN BY: PRC	CHECKED BY: JLF

SHEET TITLE: GENERAL DETAILS

DRAWING FILES: R:\JA\3915\004\DWGS\C803-C805

SHEET NO.: C804

R:\JA\3915\004\dwgs\C803-C805.dwg, 6/30/2008 2:15:28 PM, KP 7104.ps3

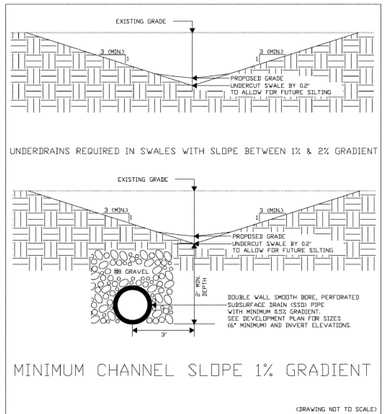

(DRAWING NOT TO SCALE)

TYPICAL SWALE DETAIL

TOWN OF WESTFIELD, INDIANA

Renée Lynn Goff 4/10/06 DATE

FIGURE ST-43

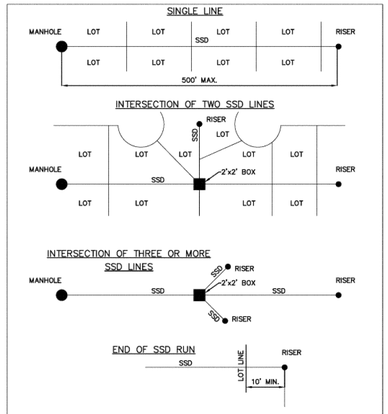

RISER LOCATIONS

TOWN OF WESTFIELD, INDIANA

Renée Lynn Goff 4/10/06 DATE

FIGURE ST-38

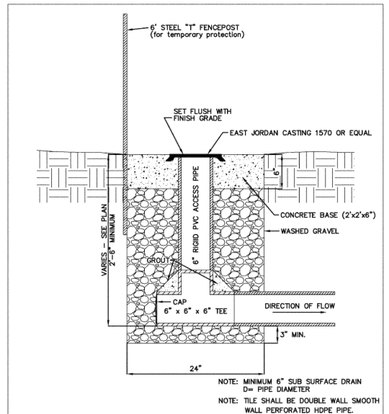

SUBSURFACE DRAIN (SSD) RISER DETAIL

TOWN OF WESTFIELD, INDIANA

Renée Lynn Goff 4/10/06 DATE

FIGURE ST-37

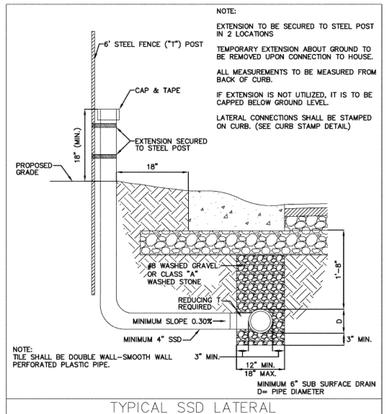

TYPICAL SSD LATERAL TO INDIVIDUAL LOTS ALONG STREETS

TOWN OF WESTFIELD, INDIANA

Renée Lynn Goff 4/10/06 DATE

FIGURE ST-35

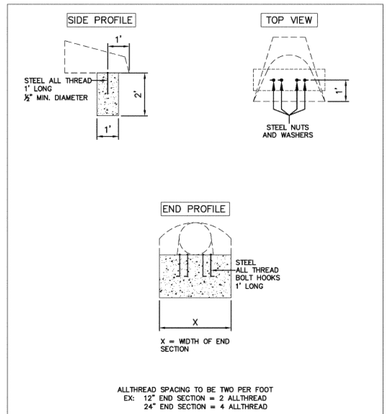

ANCHOR FOR CONCRETE END SECTIONS

TOWN OF WESTFIELD, INDIANA

Renée Lynn Goff 4/10/06 DATE

FIGURE ST-30

REVISIONS:

DAVID A. CLARK REGISTERED No. 19300219 STATE OF INDIANA PROFESSIONAL ENGINEER

DATE: 06/27/08

THIS DRAWING AND THE IDEAS, DESIGNS AND CONCEPTS CONTAINED HEREIN ARE THE EXCLUSIVE INTELLECTUAL PROPERTY OF THE SCHNEIDER CORPORATION, AND ARE NOT TO BE USED OR REPRODUCED, IN WHOLE OR IN PART, WITHOUT THE WRITTEN CONSENT OF THE SCHNEIDER CORPORATION.

© COPYRIGHTED BY THE SCHNEIDER CORP.(2008)

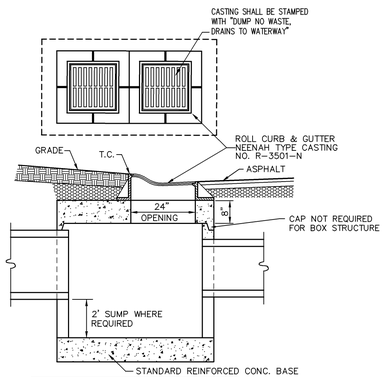

Manhole/Inlet Inside Sizing	
Depth of Structure	Minimum Square Opening
Less than 5 feet	36"x66"
5 feet or more	48"x66"

If depth is less than 3' steps are not required. If depth is 3' or greater then steps shall be at 8" O.C. with first step 18" below top of casting.

DOUBLE ROLL CURB INLET

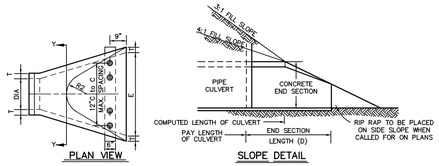

DIMENSIONS OF CONCRETE END SECTIONS FOR ROUND PIPE									
DIA	t (MIN)	A *	C *	D *	E *	K	R_1	R_2	APPROX. WEIGHT
12"	2"	5"	4'-3"	6'-2"	2'-0"	1.3	10 1/8"	9"	800
15"	2 1/4"	7"	4'-0"	6'-3"	2'-6"	1.5	12 1/2"	11"	1,100
18"	2 1/2"	11"	4'-1"	6'-2"	3'-0"	1.8	15 1/2"	12"	1,300
21"	2 3/4"	11"	3'-6"	6'-3"	3'-6"	2.1	16 1/8"	13"	1,500
24"	3"	1'-0"	2'-8"	6'-3"	4'-0"	2.3	16 3/16"	14"	1,800
27"	3 1/4"	1'-1"	2'-5"	6'-3"	4'-6"	2.6	18 1/2"	14 1/2"	2,100
30"	3 1/2"	1'-2"	1'-10"	6'-3"	5'-0"	2.9	18 3/16"	15"	2,400
33"	3 3/4"	1'-3"	3'-6"	8'-3"	5'-6"	3.1	18 1/2"	17 1/2"	4,100
36"	4"	1'-5"	3'-1"	8'-3"	6'-0"	3.4	23 3/4"	20"	4,200
48"	5"	2'-0"	2'-2"	8'-2"	7'-0"		28 1/8"	22"	6,500

* TOLERANCE +/- 1"

PRECAST CONCRETE END SECTION

1 C805

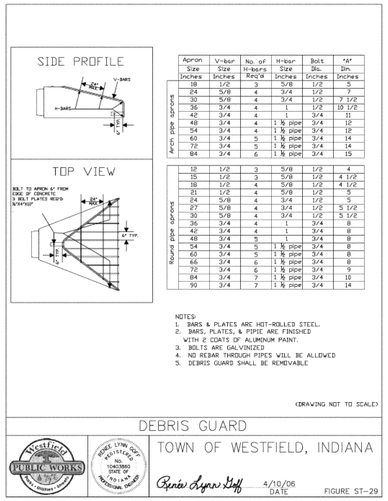

Apron Pipe Aprons	Apron Size Inches	V-bar Size Inches	No. of H-bars Req'd	H-bar Size Inches	Bolt Dia. Inches	Bolt Sm. Inches	"A" Inches
	18	1/2	3	5/8	1/2	1/2	5
	24	5/8	4	3/4	1/2	1/2	7
	30	5/8	4	3/4	1/2	1/2	7 1/2
	36	3/4	4	1	1/2	1/2	10 1/2
	42	3/4	4	1	3/4	1/2	11
	48	3/4	4	1 ½ pipe	3/4	1/2	12
	54	3/4	4	1 ½ pipe	3/4	1/2	12
	60	3/4	5	1 ½ pipe	3/4	1/2	14
	72	3/4	5	1 ½ pipe	3/4	1/2	14
	84	3/4	6	1 ½ pipe	3/4	1/2	15
Round Pipe Aprons	12	1/2	3	5/8	1/2	1/2	4
	15	1/2	3	5/8	1/2	1/2	4 1/2
	18	1/2	4	5/8	1/2	1/2	4 1/2
	21	1/2	4	5/8	1/2	1/2	5
	24	5/8	4	3/4	1/2	1/2	5
	27	5/8	4	3/4	1/2	1/2	5 1/2
	30	5/8	4	3/4	1/2	1/2	5 1/2
	36	3/4	4	1	3/4	1/2	8
	42	3/4	4	1	3/4	1/2	8
	48	3/4	5	1	3/4	1/2	8
	54	3/4	5	1 ½ pipe	3/4	1/2	8
	60	3/4	5	1 ½ pipe	3/4	1/2	8
	66	3/4	6	1 ½ pipe	3/4	1/2	8
	72	3/4	6	1 ½ pipe	3/4	1/2	9
	84	3/4	7	1 ½ pipe	3/4	1/2	10
	90	3/4	7	1 ½ pipe	3/4	1/2	14

NOTES:
1. BARS & PLATES ARE HOT-ROLLED STEEL.
2. BARS, PLATES, & PIPE ARE FINISHED WITH 2 COATS OF ALUMINUM PAINT.
3. BOLTS ARE GALVINIZED
4. NO REBAR THROUGH PIPES WILL BE ALLOWED
5. DEBRIS GUARD SHALL BE REMOVABLE

(DRAWING NOT TO SCALE)

DEBRIS GUARD

TOWN OF WESTFIELD, INDIANA

Renée Lynn Goff 4/10/06 DATE

FIGURE ST-29

PIPE SIZE (INCHES)	STRUCTURES LESS THAN 48" FROM T/C TO INVERT (INCHES)	STRUCTURES GREATER THAN 48" FROM T/C TO INVERT	ANGLE AND QUALITY OF PIPES WILL REQUIRE SPECIAL DESIGN	STEPS REQUIRED	CURB CASTING #R-3501N	CASTING #3501 TL & TR
12 TO 18	24 X 24	***	DESIGN APPROVAL	NO	YES	YES
12 TO 21	30 X 30	***	DESIGN APPROVAL	NO	YES	YES
18 TO 21		MH/BOX	DESIGN APPROVAL	YES	YES	YES
21 TO 27	24 X 36* OR 36 X 36	***	DESIGN APPROVAL	NO	NO	YES
12 TO 24	36 X 36	***	DESIGN APPROVAL	NO	YES	YES
24 OR LARGER	DESIGN APPROVAL	***	DESIGN APPROVAL	NO	NO	YES
24 OR LARGER		MH/BOX	DESIGN APPROVAL	YES**	YES	YES

* PIPES NO LARGER THAN 18" CAN BE USED IN THE 2' SIDE OF THIS BOX.

**INCOMING AND OUT GOING PIPES EFFECT STEPS IN THIS STRUCTURE.

***SPECIAL NOTE: STRUCTURES DEEPER THAN 48" FROM T/C TO INVERT WILL BE A M.H. OR A BOX WITH STEPS UNLESS SPECIAL DESIGN IS APPROVED.

SPECIAL NOTE: STRUCTURES WILL BE DESIGNED FOR MAXIMUM FLOW IN PIPES.

SPECIAL NOTE: TOWN MAY REQUIRE STEPS TO BE INSTALLED AFTER STRUCTURE IS SET, TO IMPROVE ACCESS.

STORM STRUCTURE SIZING TABLE

TOWN OF WESTFIELD, INDIANA

Renée Lynn Goff 4/10/06 DATE

FIGURE ST-15

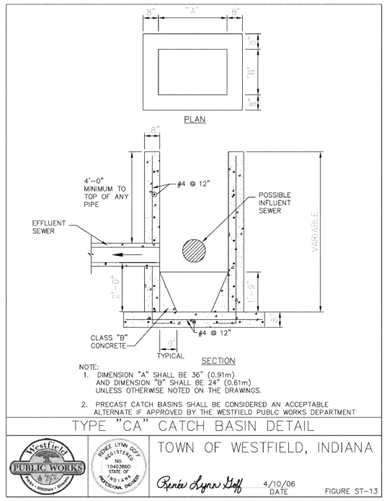

NOTE:
1. DIMENSION "A" SHALL BE 36" (0.91m) AND DIMENSION "B" SHALL BE 24" (0.61m) UNLESS OTHERWISE NOTED ON THE DRAWINGS.
2. PRECAST CATCH BASINS SHALL BE CONSIDERED AN ACCEPTABLE ALTERNATE IF APPROVED BY THE WESTFIELD PUBLIC WORKS DEPARTMENT.

TYPE "CA" CATCH BASIN DETAIL

TOWN OF WESTFIELD, INDIANA

Renée Lynn Goff 4/10/06 DATE

FIGURE ST-13

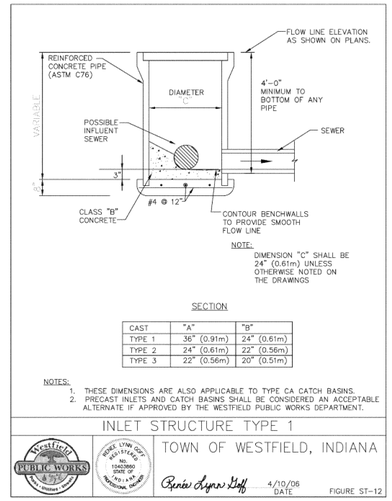

CAST	"A"	"B"
TYPE 1	36" (0.91m)	24" (0.61m)
TYPE 2	24" (0.61m)	22" (0.56m)
TYPE 3	22" (0.56m)	20" (0.51m)

NOTES:
1. THESE DIMENSIONS ARE ALSO APPLICABLE TO TYPE CA CATCH BASINS.
2. PRECAST INLETS AND CATCH BASINS SHALL BE CONSIDERED AN ACCEPTABLE ALTERNATE IF APPROVED BY THE WESTFIELD PUBLIC WORKS DEPARTMENT.

INLET STRUCTURE TYPE 1

TOWN OF WESTFIELD, INDIANA

Renée Lynn Goff 4/10/06 DATE

FIGURE ST-12

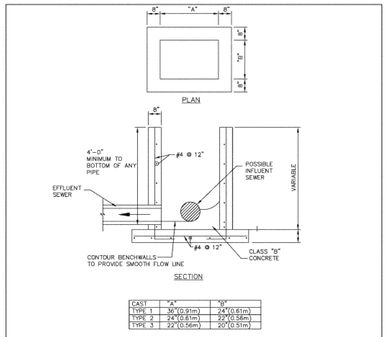

CAST	"A"	"B"
TYPE 1	36"(0.91m)	24"(0.61m)
TYPE 2	24"(0.61m)	22"(0.56m)
TYPE 3	22"(0.56m)	20"(0.51m)

NOTE:
1. THESE DIMENSIONS ARE ALSO APPLICABLE TO TYPE "CA" CATCH BASINS. (See figure ST-13)
2. PRECAST INLETS AND CATCH BASINS SHALL BE CONSIDERED AN ACCEPTABLE ALTERNATE IF APPROVED BY THE WESTFIELD PUBLIC WORKS DEPARTMENT

INLET STRUCTURE TYPE 1A

TOWN OF WESTFIELD, INDIANA

Renée Lynn Goff 4/10/06 DATE

FIGURE ST-11

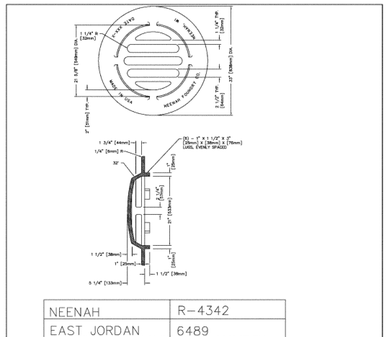

NEENAH	R-4342
EAST JORDAN	6489

* OR APPROVED BY WESTFIELD PUBLIC WORKS DEPARTMENT

** STORM SEWER CASTINGS MANHOLE COVERS, BEEHIVE INLETS, CURB INLETS OR OTHER APPROVED CASTING SHALL HAVE THE FOLLOWING PHRASES CAST IN RECESSED LETTERS TWO (2) INCHES IN HEIGHT:
A. "STORM SEWER"
B. "DRAINS TO RIVER" OR "DRAINS TO WATERWAY"
C. "DUMP NO WASTE"
D. OTHER PHRASES SHALL REQUIRE APPROVAL OF THE WESTFIELD PUBLIC WORKS DEPARTMENT.

BEEHIVE CURB INLET CASTING

TOWN OF WESTFIELD, INDIANA

Renée Lynn Goff 4/10/06 DATE

FIGURE ST-10

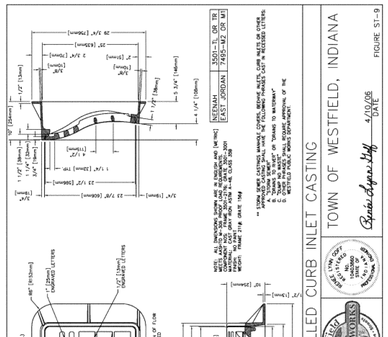

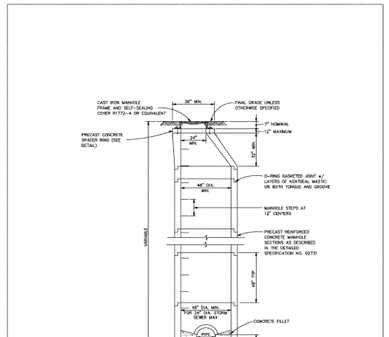

STANDARD STORM MANHOLE DETAIL

TOWN OF WESTFIELD, INDIANA

Renée Lynn Goff 4/10/06 DATE

FIGURE ST-1

Schneider

THE SCHNEIDER CORPORATION
Historic Fort Harrison
8901 Otis Avenue
Indianapolis, IN 46216-1037
Telephone: 317.826.7100
Fax: 317.826.7300
www.schneidercorp.com

Architecture
Civil Engineering
Environmental Engineering
Geotechnical Services
GIS * LIS
Home Builder Services
Interior Design
Land Surveying
Landscape Architecture
Transportation Engineering

CENTENNIAL SOUTH EXPANSION

WESTFIELD, INDIANA

ESTRIDGE DEVELOPMENT CO., INC.

CARMEL, INDIANA

DATE: 06/27/08
PROJECT NO.: 3915.004
DRAWN BY: PRC
CHECKED BY: JLF
SHEET TITLE: GENERAL DETAILS
DRAWING FILES: R:\3k\3915\004\DWGS\C803-C805

SHEET NO.: C805

R:\3k\3915\004\dwgs\C803-C805.dwg, 6/30/2008 1:10:16 PM, KIP 7204.pc3

SECTION 02222 - EARTHWORK FOR UTILITIES

PART 1 - GENERAL

1.1 DESCRIPTION

A. Scope: Specifications for the stripping of topsoil and vegetation, excavation, trenching, bedding, filling, backfilling, compaction, and related work in connection with the installation of water mains, gravity sanitary sewers, storm sewers, and force mains are included in this Section.

B. Definitions

1. Excavation: Removal of earth and rock to form a trench for the installation of a water main, gravity sanitary sewer, storm sewer, or force main.

1. Earth: Unconsolidated material in the crust of the Earth derived by weathering and erosion.
Earth includes:
Materials of both inorganic and organic origin;
Boulders less than 1/3 cubic yard in volume, gravel, sand, silt, and clay;
Materials which can be excavated with a backhoe, trenching machine, drag line, clam shell, bulldozer, highlift, or similar excavating equipment without the use of explosives, rock rippers, rock hammers, or jack hammers.

3. Rock: A natural aggregate of mineral particles connected by strong and permanent cohesive forces.
Rock includes:
a. Limestone, sandstone, dolomite, granite, marble, and lava;
b. Boulders 1/3 cubic yard or more in volume;
c. Materials which cannot be excavated by equipment which is used to remove earth overburden without the use of explosives, rock rippers, rock hammers, or jack hammers;
d. Materials which cannot be excavated with a backhoe, trenching machine, drag line, clam shell, bulldozer, high-lift, or similar excavating equipment without the use of explosives, rock rippers, rock hammers, or jack hammers.

1. Undercutting: Excavation of rock and unsuitable earth below the bottom of the pipe or conduit to be installed in the trench.
2. Subgrade: Undisturbed bottom of a trench.
3. Bedding: Earth placed in trench to support pipe and conduit.
4. Backfill and Fill: Earth placed in trench from the top of bedding to finished grade, or to subbase of pavement.
5. Topsoil: Earth containing sufficient organic materials to support the growth of grass.

1. QUALITY ASSURANCE

2. The blasting supervisor shall have no less than five (5) years experience in explosive demolition and excavation. The blasting supervisor and crews shall have all appropriate licenses for the handling and use of explosives.

3. A Blasting Monitoring and Control Program shall be developed by the Contractor, and submitted to the Engineer, prior to the commencement of blasting operations.

4. The Blasting Monitoring and Control Program shall indicate the blasting area, the charge locations, number of explosive rounds at each charge location, the maximum charge per delay in pounds, and the maximum charge per round in pounds.

1. SUBMITTALS

A. Submittals shall be as specified in the General Conditions.

B. Submit the following:
1. Materials test reports.
2. Blasting supervisor's experience record.
3. Blasting Monitoring & Control Program.
4. Storage procedures for explosives.

1.4 SITE CONDITIONS
Existing storm sewers, sanitary sewers, water mains, gas mains, electric ducts, telephone ducts, steam mains and other under-ground structures, lines, and their house connections are to been shown on the plans according to the best available information. The exact location and protection of these facilities and structures, their support and maintenance in operation during construction (in cooperation with the proper authorities), is the responsibility of the Contractor.

PART 2 - PRODUCTS

2.1 BEDDING

A. Class I bedding shall be angular 6 to 12 mm (1/4 to 1/2 inch) graded stone, coral, slag, cinders, crushed stone or crushed shells.

B. Class II bedding shall be coarse sands and gravels with maximum particle size of 20 mm (3/4 inch). Class II bedding includes variously graded sands and gravels containing small percentage of fines generally granular and non-cohesive, either wet or dry. Soil types GW (well-graded gravel), SW (well-graded sand), and SP (pea gravel and/or crushed stone mixed with sand) are included in this class.

2.2 BACKFILL

A. General: Backfill shall be earth of such gradation and moisture content that the soil will compact to the specified density and remain stable. Unsuitable materials shall not be used.

B. Cover Material: Pipe cover material shall consist of durable particles ranging in size from fine to coarse (No. 200 to 1 inch) in size in a substantially uniform combination. Unwashed bank run sand and crushed bank-run gravel will be considered generally acceptable. Bedding material may be used for cover material.

C. Granular Backfill - Special Backfill: Granular backfill, when indicated on the plans or as ordered by the Engineer, shall be used for backfilling providing it meets the following soils classified by the Unified Soils Classification System ASTM D-2487 or the Indiana State Highway Standard Specification Section 211 - Special Fill and Backfill ("B" Borrow).

Group Symbols Typical Names
GW Well-graded gravels and gravel-sand mixtures, little or no fines
GP Poorly graded gravels and gravel-sand mixtures, little or no fines
SW Well-graded sands and gravelly sands, little or no fines
SP Poorly graded sands and gravelly sands, little or no fines

D. Suitable Excavated Materials as Backfill: Excavated material shall be used when earth backfill is specified on the plans or where granular backfill or flowable fill is not specifically specified, provided that such material consists of loam, clay, or other materials which, are suitable for backfilling. Unsuitable backfill or frozen backfill material shall not be used. Suitable backfill shall be the following soils, classified by the Unified Soil Classification System, ASTM D-2487:

Group Symbols Typical Names
GW Well-graded gravels and gravel-sand mixtures, little or no fines
GP Poorly graded gravels and gravel-sand mixtures, little or no fines
GM Silty gravels, gravel-sand-silt mixtures
GC Clayey gravels, gravel-sand-clay mixtures
SW Well-graded sands and gravelly sands, little or no fines
SP Poorly graded sands and gravelly sands, little or no fines
SM Silty sands, sand-silt mixtures
SC Clayey sands, sand-clay mixtures
ML Inorganic silts, very fine sands, rock flour, silty or clayey fine sands
CL Inorganic clays of low to medium plasticity, gravelly clays, sandy clays, silty clays, lean clays

E. Unsuitable Materials: Materials which are unsuitable for backfill include stones greater than 8 inches in their largest dimension, pavement, rubbish, debris, wood, metal, plastic, and the following soils, classified by the Unified Soil Classification System, ASTM D-2487:

Group Symbols Typical Names
OL Organic silts and organic silty clays of low plasticity
MH Inorganic silts, micaceous or diatomaceous fine sands or silts, elastic silts
CH Inorganic clays of high plasticity, fat clays
OH Organic clays of medium to high plasticity
PT Peat, muck, and other highly organic soils

F. Concrete Backfill: Concrete used for backfill around sewers, water mains, or other utility piping shall be Class B concrete.

G. Cellular Concrete: Light weight cellular concrete may be used for filling of abandoned sewers as a grouting mixture for fillings voids and as a substitute for backfill concrete in tunnels or casing pipes. The cellular concrete shall be produced by blending preformed foam with cement-sand grout slurry to produce a concrete having a fresh weight per cubic foot of not less than 75 pounds.

H. Flowable Fill
1. Flowable fill shall be in accordance with INDOTSS Section 213 and as specified herein.
a. Unconfined Compressive Strength (28 day): 50-150 psi b. Flow Test - Diameter of Spread: 8 inches Â± 1 inch
2. Design: Mix design shall be required to be submitted and approved by the Town of Westfield Public Works Department or designated engineer. A trial batch demonstration may be required. The mix design shall include a list of all ingredients, the source of all materials, the gradation of all aggregates, the names of all admixtures and dosage rates, and the batch weights. Except for adjustments to compensate for routine moisture fluctuations, minor mix design changes after the trial batch verification shall be documented and justified prior to implementation by the Contractor. A change in the source of materials or addition or deletion of admixtures or cementitious materials will require the mix design to be re-submitted for approval. The Contractor shall be required to provide test data from a laboratory which shows that the proposed mix design is in accordance with the requirements listed in this specification.

PART 3 - EXECUTION
3.1 EXISTING UTILITIES, STRUCTURES, AND PROPERTY

A. All poles, fences, sewer, gas, water or other pipes, wires, conduits and manholes, railroad tracks, buildings, structures and property along the routes of water mains, force mains, and sewers shall be supported and protected from damage by the Contractor.

B. Movable items such as mail boxes may be temporarily relocated during construction. Place movable items in their original location immediately after backfilling is completed, unless otherwise shown on the drawings. Replace movable items which are damaged during construction.

C. The Contractor shall proceed with caution in the excavation and preparation of trenches so that the exact location of underground utilities and structures, both known and unknown, may be determined. The Contractor shall be responsible for the repair of utilities and structures when broken or otherwise damaged.

D. Whenever, in the opinion of the Westfield Public Works Department, it is necessary to explore and excavate to determine the location of underground structures, the Contractor shall make explorations and excavations for such purpose.

E. Wherever sewer, gas, water, or other pipes or conduits cross the trench, the Contractor shall support said pipes and conduits without damage to them. The manner of supporting such pipes, etc., shall be subject to the approval of the owner of the utility involved.

F. When utility lines that have to be removed or relocated are encountered within the areas of operations, the Contractor shall notify the Westfield Public Works Department or the owner of that utility in ample time for the necessary measure to be taken to prevent interruption of the service.

G. The Contractor shall so conduct the work that no equipment, material, or debris will be placed or allowed to fall upon private property in the vicinity of the work unless he shall have first obtained the property owner's written consent thereto and shall have shown said written consent to the Town.

H. All excavated material shall be piled in a manner that will avoid obstructing sidewalks and driveways. Hydrants under pressure, valve pit covers, valve boxes, curb stop boxes, fire and police call boxes, or other utility controls shall be left unobstructed and accessible until the work is completed. Gutters shall be kept clear or other satisfactory provisions made for street drainage, and natural watercourses shall not be obstructed.

I. All streets, alleys, pavements, parkways, and private property shall be thoroughly cleaned of all surplus materials, earth, and rubbish placed thereon by the Contractor.

3.2 CLEARING

A. Clear and remove logs, stumps, brush, vegetation, rubbish, and other perishable matter from the project site as required to perform work.

B. Do not remove or damage trees that do not interfere with the work. Completely remove trees required to be removed, including stumps and roots. Properly treat damaged trees which can be saved.

C. Debris from the tree removal, including trunk, branches, leaves, roots and stumps, shall not be buried or burned on the job site, but must be completely hauled away and disposed of at the Developer's or Contractor's expense.

3.3 STRIPPING AND STOCKPILING OF TOPSOIL

A. Strip topsoil and vegetation from the excavated areas. Clean topsoil may be stockpiled for reuse as the upper 6 inches of the areas to be seeded.

B. Do not intermix grass, weeds, roots, root mat, brush, and stones larger than 3 inches with stockpiled topsoil. Dispose of root contaminated topsoil.

3.4 PAVEMENT AND WALK REMOVAL

A. Remove existing pavement and walks from the excavated areas. Remove excavated asphaltic and concrete materials from the job site as these materials are excavated.

B. The width of pavement removed along the normal trench for the installation of pipe and structures shall not exceed the width of the trench by more than 12 inches on each side of the trench when the amount of pavement removed is less than 75% of the total existing pavement width. Remove all existing pavement when the excavation requires the removal of 75% or more of the total existing pavement width.

C. Remove walks completely when excavation is along the length of a walk and requires the removal of part of the walk. Remove walks to existing joints in the walks when excavation crosses walks. If there are no joints in an existing walk, the width of walk removed shall not exceed the width of the trench by more than 12 inches on each side of the trench.

D. Use methods to remove pavement and walks that will assure the breaking or cutting of pavement and walks along straight lines. The face of the remaining pavement and walk surfaces shall be approximately vertical.

1. EXCAVATING

2. A. General: After stripping of topsoil and vegetation, perform excavations of every description regardless of material encountered within the grading limits of the project to lines and grades as indicated on the drawings or as otherwise specified.

3. 1. Materials removed below the depths indicated shall be replaced to the indicated excavation grade with satisfactory bedding materials placed and compacted.

4. B. Dewatering: Keep excavations free from water until the water mains, force mains, sewers, structures, and appurtenances to be constructed in the excavations are completed and will safely withstand forces from water. Provide sufficient dewatering equipment and make satisfactory arrangements for the disposal of the water without undue interference with other work, damage to property, or damage to the environment.

5. 1. Operate dewatering equipment ahead of pipe laying and keep the water level below the pipe invert until the pipe is secured by backfill.

6. C. Trenching: Trees, boulders, and other surface encumbrances, located so as to create a hazard to employees involved in excavation work or in the vicinity thereof at any time during operations, shall be removed or made safe before excavating is begun.

1. Do not open more than 100 feet of trench in advance of the installed pipe, unless otherwise directed or permitted by the Westfield Public Works Department or designee. Excavate the trench within 6 inches of full depth for a distance of at least 30 feet in advance of the pipe laying, unless otherwise directed or permitted.

1. Contractor shall be responsible for the determination of the angle of repose of the soil in which the trenching is to be done. Excavate all slopes to at least the angle of repose except for areas where solid rock allows for line drilling or presplitting, or where shoring or trench box is to be used.

2. Sides, slopes, and faces of all excavations shall meet accepted engineering requirements by scaling, benching, barricading, rock bolting, wire meshing, or other equally effective means. Give special attention to slopes which may be adversely affected by weather or moisture content.

3. Flatten the trench sides when an excavation has water conditions, silty materials, loose boulders, and areas where erosion, deep frost action, and slide planes appear.

4. Shoring, sheeting, trench box, or other means shall be used to support sides of trenches in hard or compact soil when the trench is more than 5 feet in depth and 8 feet or more in length. Sides of trenches shall include embankments adjacent to trenches. In lieu of shoring, the sides of the trench above the 5-foot level may be sloped to preclude collapse, but shall not be steeper than a 1-foot rise to each 1/2-foot horizontal. Provide a bench of 4 feet minimum at the toe of the sloped portion of the trench wall when the outside diameter of the pipe to be installed is greater than 6 feet.

5. Use diversion ditches, dikes, or other suitable means to prevent surface water from entering an excavation and to provide adequate drainage of the area adjacent to the excavation. Do not allow water to accumulate in an excavation. If possible, the grade should be away from the excavation.

6. Excavations shall be inspected by a competent Contractor's representative after every rainstorm or other hazard-increasing occurrence, and the protection against slides and cave-ins shall be increased, if necessary.

7. Do not store excavated or other material nearer than 4 feet from the edge of any excavation. Store and retain materials as to prevent materials from falling or sliding back into the excavation. Install substantial stop log or barricades when mobile equipment is utilized or allowed adjacent to excavations.

8. The width of trenches in earth for water main pipe, sewers, basin connections, house connections, and other drains up to and including 33 inches in internal diameter shall provide a clearance of not less than 8 inches or more than 10 inches on each side of the pipe. Trenches for pipe larger than 33 inches in internal diameter shall provide a clearance of not less than 10 inches or more than 14 inches on each side of the pipe.

9. The maximum clear width of trenches in earth for manholes shall be the greatest external width of the structure plus the space necessary for the construction and removal of the forms and construction of masonry work.

10. The design of the water main, force main, and/or sewer pipe and structures is predicated upon the width of trench specified in this Article. The Contractor shall be responsible for the provision and installation, at his own expense, of such remedial measures as may be directed by the Westfield Public Works Department or designee; should the trench width limits specified in this Article be exceeded.

11. Test the air in excavations in locations where oxygen deficiency or gaseous conditions are possible. Establish controls to assure acceptable atmospheric conditions. Provide adequate ventilation and eliminate sources of ignition when flammable gases are present. Attended emergency rescue equipment, such as breathing apparatus, a safety harness and line, and basket stretcher, shall be readily available where adverse atmospheric conditions may exist or develop in an excavation.

12. Provide walkways or bridges with guardrails where employees or equipment are required or permitted to cross over excavations.

13. Provide ladders where employees are required to be in trenches 4 feet deep or more. Ladders shall extend from the floor of the trench to at least 3 feet above the top of the excavation. Locate ladders to provide means of exit without more than 25 feet of lateral travel.

14. Provide adequate barriers and physically protect all remotely located excavations. Barricade or cover all wells, pits, shafts, and similar excavations. Backfill temporary wells, pits, shafts, and similar excavations upon completion of exploration and similar operations.

7. D. Quicksand: Carry on the work with utmost vigor and proceed with the work expeditiously when running sand, quicksand, or other bad or treacherous ground is encountered. Install bedding to support the pipe as directed.

8. E. Blasting: Removal of rock from the excavation may be facilitated by the use of controlled explosives.

1. Blasting supervision and Blasting Monitoring and Control Programs shall meet the requirements of this Section.

2. Storage procedures for explosives shall be developed by the Contractor and submitted to the Engineer before explosives are brought to the job site.

1. SHEETING

A. The Contractor shall be responsible for construction means, methods, techniques, and procedures, and for providing a safe place for the performance of the work by the Contractor, Subcontractors, suppliers and their employees, and for access use, work, or occupancy by all authorized persons.

B. The Contractor shall be solely responsible for all obligations prescribed as employer obligations under Chapter XVII of Title 29, Code of Federal Regulations, Part 1926, otherwise known as "Safety and Health Regulations for Construction."

C. Adequate supporting systems, such as sheeting, shoring, piling, cribbing, and bracing shall be furnished and installed by the Contractor as required to protect existing buildings, utilities, and property from damage during the progress of the work.

3.7 STORAGE AND REMOVAL OF EXCAVATED MATERIAL

A. Suitable excavated material required for filling and backfilling operations may be stockpiled in on-site locations, at the discretion of the Westfield Public Works Department or designee, until the material is ready to be placed.

B. Remove unsuitable materials from the job site as unsuitable materials are excavated. Remove surplus suitable materials from the job site as trenches are backfilled

3.8 TEMPORARY PLUGS

Prevent foreign matter from entering pipe while it is being installed. Do not place debris, tools, clothing, or other material in the pipe. Close the open ends of pipe by watertight plugs when pipe laying is not in progress. Remove any earth or other material that enters pipe, lateral pipe, or appurtenances through any open pipe end.

3.9 BACKFILLING WATER MAIN AND FORCE MAIN TRENCHES

A. Backfilling of water main and force main trenches shall meet the requirements of ANSI/AWWA C600, unless otherwise specified in this Section.

B. Do not backfill trenches and excavations until all utilities have been inspected by the Westfield Public Works Department or designee and until all underground utilities and piping systems are installed in accordance with the requirements of the specifications and the drawings. Required hydrostatic tests may be applied to the line either before or after the trench is backfilled, subject to approval of the Westfield Public Works Department or designee.

C. Place and tamp bedding and backfill in a manner which will not damage pipe coating, wrapping, or encasement.

D. Material from the trench subgrade to the centerline of the pipe shall be Class II bedding. Place bedding by hand or approved mechanical methods in layers of 8 inches loose depth. Compact bedding by hand tamping or with a power operated hand vibrating compactor. Deposit bedding in the trench for its full width on each side of the pipe simultaneously.

E. Place pipe cover material from the centerline of the pipe to 12 inches over the pipe. Compact pipe cover material to the density required to allow backfill over the pipe cover material to be compacted to the density specified in this Article.

F. Do not use the following materials for backfill:
1. Unsuitable materials;
2. Frozen materials;
3. Materials which are too wet or too dry to be compacted to the densities specified in this Article.

G. Where the edge of the trench is within 5 feet of the existing roadway pavement, it shall be backfilled with Flowable Backfill. Where the trench is located within existing pavement or any trench specifically indicated on the drawings shall be backfilled with Flowable Backfill. Where the edge of the trench is within 5 feet or crosses a proposed roadway pavement, it shall be backfilled with Flowable Backfill. Place Flowable Backfill in lifts. In all areas, cuts and trenches shall be backfilled with Flowable backfill to within 1 Ã½â€□ inches of the existing asphalt paved surface The remainder of the trench is to be filled with crushed stone and compacted in place, prior to opening the street to traffic. The Contractor shall add crushed stone and grade until sufficient settlement has taken place and final restoration is made.

H. Trenches in Traveled Pavements: All cuts and trenches in paved streets or other paved areas shall be backfilled with flowable fill material unless granular backfill is specifically approved by the Director of Public Works to within 12 inches of the street surface in grass areas or to the bottom of the pavement section.

3.10 BACKFILLING SANITARY SEWER AND STORM SEWER TRENCHES

A. Do not backfill trenches and excavations until all utilities have been inspected by the Westfield Public Works Department or designee and until all underground utilities and piping systems are installed in accordance with the requirements of the specifications and the drawings.

B. Place and tamp bedding and backfill in a manner which will not damage pipe coating, wrapping, or encasement.

C. Bedding procedures for sanitary sewers and storm sewers shall be as specified in the Section for the applicable pipe material.

D. If bedding does not cover the pipe, place pipe cover material from the top of bedding to 12 inches over the pipe. Compact pipe cover material to the density required to allow backfill over the pipe cover material to be compacted to the density specified in this Article.

E. Do not use the following materials for backfill:
1. Unsuitable materials;
2. Frozen materials;
3. Materials which are too wet or too dry to be compacted to the densities specified in this Article.

F. Where the edge of the trench is within 5 feet of or crosses the existing roadway pavement, it shall be backfilled with Flowable Backfill. Backfill any trench specifically indicated on the drawings with Flowable Backfill.

G. Trenches in State Highway Right-of-Way: Where excavation occurs within the right-of-way of a state highway, all areas within 12 feet of the pavement edge shall be backfilled with Grade "B Borrow" Special Backfill. All areas beyond 12 feet shall be backfilled in the manner specified in the following paragraph.

H. Trenches Not Requiring Special Backfill: Backfill trenches not requiring granular backfill with suitable excavated material. Place and compact backfill to produce an adequate foundation for the applicable paved or unpaved surface treatment. Fill and restore any settlement of the backfill. In paved areas, backfill shall be maintained to subbase elevation. In unpaved areas, backfill shall be mounded above finish grade to allow for settlement. Grade unpaved area to be restored 6 inches below finish grade after settlement of backfill and immediately before restoration of vegetated areas. Place 6 inches of topsoil over area to be restored.

I. Trenches in Traveled Pavements: All cuts and trenches in paved streets or other paved areas shall be backfilled with flowable fill material unless granular backfill is specifically approved by the Director of Public Works to within 12 inches of the street surface in grass areas or to the bottom of the pavement section.

3.11 MAINTAINING TRAFFIC

A. Before closing any thoroughfare, the Contractor shall notify and, if necessary, obtain a permit or permits from the duly constituted public authority having jurisdiction, state, county, or city, which notice shall be given not less than 72 hours in advance of the time when it may be necessary in the process of construction to close such thoroughfare.

B. The Contractor shall conduct his work in such manner as not to unduly or unnecessarily restrict or impede normal traffic through the streets of the community. Insofar as it is practicable, excavated material and spoil banks shall not be located in such manner as to obstruct traffic; and the traveled way of all streets, roads, and alleys shall be kept clear and unobstructed insofar as is possible and shall not be used for the storage of construction materials, equipment, supplies, or excavated earth, except when and where necessary. If required by duly constituted public authority, the Contractor shall, at his own expense, construct bridges or other temporary crossing structures over trenches so as not to unduly restrict traffic. Such structures shall be of adequate strength and proper construction and shall be maintained by the Contractor in such manner as not to constitute an undue traffic hazard. Private driveways shall not be closed except when and where necessary, and then only upon due advance notice to the Engineer and for the shortest practicable period of time consistent with efficient and expeditious construction. The Contractor shall be liable for any damages to persons or property resulting from his work.

3.12 WALKS AND PASSAGEWAYS
The Contractor, when required, shall make provisions at cross streets for the free passage of vehicles and foot passengers, either by bridging or otherwise, and shall not obstruct the sidewalks, gutters, or streets, nor prevent in any manner the flow of water in the latter, but shall use all proper and necessary means to permit the free passage of surface water along the gutters. The Contractor shall immediately cart away all offensive matter, exercising such precaution as may be directed by Westfield Public Works Department or designee. All material excavated must be so disposed of as to inconvenience the public and adjacent tenants as little as possible and to prevent injury to sidewalks, fences, and adjacent property of all kinds. The Contractor may be required to erect suitable barriers to prevent such inconvenience or injury.

3.13 WARNING LIGHTS
The Contractor shall place sufficient warning lights on or near the work and keep them illuminated during periods of reduced visibility (from twilight in the evening until sunrise) and will be responsible for any damages that any party or the Town may sustain in consequences of neglecting the necessary precaution in prosecuting this work.

3.14 CLEANUP AND MAINTENANCE

A. Cleanup the job site as backfilling is completed. Remove excess earth, rock, bedding, materials, and backfill materials. Remove unused piping materials, structure components, and appurtenances. Restore items moved, damaged, or destroyed during construction. Grade area to be restored. Leave backfill mounded over trenches which are not backfilled with Special Backfill. Cleanup and restoration specified in this paragraph shall be completed within 1,000 feet of excavation.

B. Restoration of grass, bushes, trees, and other plants shall be completed by Contractor to original condition.

C. Restoration of pavement and walks shall be specified in Section 02500, Paving and Surfacing. A temporary driving surface, such as crushed stone, shall be compacted in place in the trench area as backfilling is complete. Cold-mix asphalt patching material may be used as a temporary driving surface at the Contractor's option or when specifically called for in the plans or specifications. Temporary pavement shall not be more than 1,000 feet behind the excavation. When no existing pavement remains after excavation, a temporary compacted aggregate surfacing may be provided instead of the permanent pavement or a temporary cold-mix asphalt pavement. When the pavement is asphaltic concrete, placement of the asphaltic concrete surface course may be delayed until all other heavy construction is completed.

D. Maintain the job site until the work has been completed and accepted. Fill trenches which settle when settlement is visible. Restore items damaged by construction or improper restoration. Keep dust conditions to minimum by the use of water, salt, calcium chloride, oil, or other means.

LAKE LINER SPECIFICATION

It may be necessary to construct a liner to seal the more permeable sandy clays and sand seams which may be present at a shallow depth within the side slope or bottom of the excavation. The contractor shall perform soils analysis tests in the lake area(s) to determine if the lake(s) will require a liner. In the event that construction of a liner becomes necessary, Lake Liner specifications have been included below.

Acceptable liners are as follows:

I. Natural Clay Liner
A. Laboratory testing shall be performed on the designated liner material to determine the optimum liner compaction criteria. Subsequent to determining this compaction criteria, permeability testing shall be performed on remolded samples, compacted to this standard. Laboratory testing shall be performed at least one (1) month prior to initiating liny activities.

B. The contractor shall identify and retain the engineer–approved liner material for use on sealing the side slopes and bottom of the lake. The optimum natural liner material shall not be used for other portions of site work prior to verification that adequate resources are available and have been stockpiled. It is important that the stockpiled soils be stored in as small an area as possible to retain natural moisture. The contractor should anticipate that additional soil work may be required to bring the liner material to required uniform moisture level.

C. A representative of the testing engineer shall be present for inspection of the base and side slopes of the lake prior to and during compaction of the liner materials.

D. The clay lining material, approved by the testing engineer, shall be compacted to a minimum of 12 inches thick on the upper two thirds of the side slopes and 18 inches on the lower one third. A compacted minimum of 18 to 24 inches approved lining material shall be placed across the base of the lake.

E. The clay liner material shall be regularly sampled and tested for conformance to the moisture and Atterberg limits established for the approved liner material(s). Field density and moisture testing shall also be performed frequently during construction to establish a correlation between density and field permeability. It is imperative that moisture levels be maintained over optimum as determined in laboratory testing. Only by maintaining this condition will it be possible to approach the zero voids condition and maximize natural liner capabilities. Off–site sources for clay liner material may be used with approval by the Owner's representative and on–site testing engineer.

F. Compaction of the natural liner shall be performed by equipment operating up and down the slope. Engineered natural clay liners shall not be compacted by equipment operating around the slopes on or near the same elevation. It is important that hydration of the clay liners takes place after installation is complete. This is typically accomplished by natural rainfall or by application of fresh water at the rate of one quarter gallon per square foot for at least 72 hours. This recommended rate of hydration will help prevent shrinkage and cracking of the clay liner and maintain its integrity.

II. Bentonite
A. Materials and installation method to be reviewed by the testing engineer and approved by the Engineer.

III. Synthetic Liner
A. Materials and installation method to be reviewed by the testing engineer and approved by the Engineer.

TABLE 1

MINIMUM SPECIFIED TIME REQUIRED FOR A 1.0 psig

DROP FOR SIZE AND LENGTH OF PIPE INDICATED

Pipe Diameter In.	Minimum Time, min:s	Length for Minimum Time, ft	Time for Longer Length, S	Specification Time for Length (L) Shown, min:s							
				100 ft	150 ft	200 ft	250 ft	300 ft	350 ft	400 ft	450 ft
4	3:48	597	0.360 L	3:46	3:46	3:46	3:46	3:46	3:46	3:46	3:46
6	5:40	386	0.854 L	5:40	5:40	5:40	5:40	5:40	5:40	5:42	6:24
8	7:34	298	1.520 L	7:34	7:34	7:34	7:34	7:36	8:52	10:08	11:24
10	8:26	239	2.374 L	9:28	9:28	9:28	9:63	11:52	13:51	15:49	17:48
12	11:20	199	3.418 L	11:20	11:20	11:24	14:15	17:05	19:58	22:47	25:38
16	14:10	158	5.342 L	14:10	14:10	17:48	22:15	26:42	31:09	35:36	40:04
18	17:00	133	7.682 L	17:00	19:13	25:38	32:03	38:27	44:52	51:16	57:41
21	19:50	114	10.470 L	18:60	26:10	34:54	43:37	52:21	61:00	69:48	78:31
24	22:40	89	13.674 L	22:47	34:11	45:34	56:58	68:22	79:46	91:10	102:33
27	25:30	88	17.306 L	28:51	43:16	57:41	72:07	86:32	100:57	115:22	129:48
30	28:20	80	21.388 L	35:37	53:26	71:13	89:02	108:50	124:38	142:25	160:15
33	31:10	72	25.852 L	49:05	64:38	88:10	107:49	129:18	150:43	172:21	193:53
38	34:00	86	30.788 L	61:17	76:55	102:12	128:12	153:80	179:29	205:07	230:46

REMISIONS:

DAVID A. CLARK
REGISTERED
No. 19300219
STATE OF INDIANA
PROFESSIONAL ENGINEER

DATE: 06/27/08

THIS DRAWING AND THE IDEAS, DESIGNS AND CONCEPTS CONTAINED HEREIN ARE THE EXCLUSIVE INTELLECTUAL PROPERTY OF THE SCHNEIDER CORPORATION, AND ARE NOT TO BE USED OR REPRODUCED, IN WHOLE OR IN PART, WITHOUT THE WRITTEN CONSENT OF THE SCHNEIDER CORPORATION.
© COPYRIGHTED BY THE SCHNEIDER CORP.(2008)

Schneider
THE SCHNEIDER CORPORATION
Historic Fort Harrison
8901 Otis Avenue
Indianapolis, IN 46216–1037
Telephone: 317.826.7100
Fax: 317.826.7300
www.schneidercorp.com

Architecture
Civil Engineering
Environmental Engineering
Geotechnical Services
GIS * LIS
Home Builder Services
Interior Design
Land Surveying
Landscape Architecture
Transportation Engineering

CENTENNIAL SOUTH EXPANSION
WESTFIELD, INDIANA

ESTRIDGE DEVELOPMENT CO., INC.
CARMEL, INDIANA

DATE: 06/27/08
PROJECT NO.: 3915.004
DRAWN BY: PCJ
CHECKED BY: JLF

SHEET TITLE:
EARTHWORK SPECIFICATIONS FOR THE TOWN OF WESTFIELD

DRAWING FILES:
R:\3K\3915\004\DWGS\C901-C905

SHEET NO.:
C901

R:\3K\3915\004\dwgs\C901-C905.dwg, 6/30/2008 1:11:39 PM, KIP 7204.pc3

SECTION 02660 - WATER MAINS

PART 1 - GENERAL

1.1 DESCRIPTION

A. Scope: Furnish and install pipe, fittings, valves, hydrants and appurtenances necessary to complete work shown or specified.

B. Codes, specifications and standards referred to by title or number in this specification shall be adhered to, and latest revisions shall apply in all cases.

C. Definitions

1. Abbreviations

a. ANSI - American National Standards Institute.

b. ASTM - American Society for Testing & Materials.

c. AWWA - American Water Works Association.

2. All pipe, fitting and valve sizes and references to pipe diameter on the drawings or in the specifications are intended to be nominal size or diameter and shall be interpreted as such.

1.2 QUALITY ASSURANCE

A. Mark pipe, fittings, valves and hydrants according to the applicable specification or standard.

B. The Contractor shall test and disinfect water mains constructed under this Contract, as specified in this Section.

C. The Town shall collect samples of water from water mains constructed after the piping has been disinfected. The Town will submit the samples to the applicable regulatory agency for bacteriological analysis. Collection and submittal of these samples shall meet the requirements of the applicable regulatory agency. If samples do not pass the requirements of the bacteriological analysis, the water main will be disinfected and sampled again. This procedure will be followed until the samples pass the analysis.

D. A performance test may be required by the Public Works Director, at any time, for each crew installing water mains. The Contractor shall perform these tests at no additional cost to the Owner. When required by the Public Works Director, the Contractor shall test a given section of water main installed by a given crew. The section shall be a continuous section of water main which can be isolated by valves shown on the drawings. The Contractor shall not install water mains in other sections until the first section has been successfully tested.

PART 2 - PRODUCTS

2.1 GENERAL

All pipe, fittings, valves, hydrants and appurtenances shall be as shown on the drawings or as required by the manufacturer's and ANSI/AWWA specifications. All pipe, fittings, valves, hydrants and appurtenances shall be new and unused.

2.2 BURIED WATER MAIN PIPE AND FITTINGS

A. Ductile Iron Water Mains (3" and Larger)

1. Pipe

a. Ductile iron pipe shall meet the requirements of ANSI/AWWA C151/A21.51. Design and manufacture pipe for the pressure class listed plus 100 psi surge pressure. Additionally, a safety factor of 2.0 and a depth of cover, indicated on the drawings or as required by the manufacturer's and ANSI/AWWA specifications, shall be included. Minimum thickness class shall be as follows:

Size Range	Pressure Class
4" - 12"	350
14" - 20"	250

b. Pipe joints shall be push-on type. Joints shall meet the requirements of ANSI/AWWA C111/A21.11. Restrained joints shall be Lok-Ring, Lok-Fast, Lok-Tyte, or equal,

2. Fittings

a. Fittings shall be ductile iron. Fittings for standard size pipe shall meet the requirements of ANSI/AWWA C110/A21.10. Compact or short body fittings 3 inches through 16 inches shall meet the requirements of ANSI/AWWA C153/A21.53. Design and manufacture fittings for a pressure rating of at least 150 psi.

b. Fitting joints shall be mechanical joints or restrained push-on joints. Joints shallANSI/AWWA C111/A21.11. Thrust block all mechanical joints as indicated on the drawings or as required by the manufacturer's and ANSI/AWWA specifications. Pipe connecting to restrained joint fittings shall be restrained as indicated on the drawings or as required by the manufacturer's and ANSI/AWWA specifications.

3. Adapters

a. Adapters from ductile iron water mains to flange joint valves or fittings shall be ductile iron. Adapters shall meet the requirements of ANSI/AWWA C110. Design and manufacture adapters for a pressure class rating of 150 psi.

b. Adapter ends connecting to ductile iron water mains shall be one of the following: plain end, push-on joint, mechanical joint or restrained push-on joint. Adapters with plain ends, push-on joints or mechanical joints may be used where restrained joints are not required. Adapters shall have restrained push-on joints where restrained joint piping is required, as indicated on the drawings. Mechanical joints and restrained push-on joints shall meet the requirements of ANSI/AWWA C111/A21.11. Restrained joints shall be Lok-Ring, Lok-Fast, Lok-Tyte or as approved by the Public Works Director.

c. Adapter ends connecting to flange joint valves or fittings shall have joints complying with the specifications for the applicable valves or fittings.

1. Line the inside surfaces of all pipe, fittings and adapters with single layer cement mortar lining. Cement mortar lining and seal coating shall meet the requirements of ANSI/AWWA C104. Coat the outside surfaces of all pipe, fittings and adapters with a bituminous coating, complying with ANSI/AWWA C151.

2. Gaskets for mechanical joints and push-on joints shall meet the requirements of ANSI/AWWA C111/A21.11.

1. Nuts and Bolts

1. Nuts and bolts for mechanical joints shall be high 1 strength, heat treated, alloy steel. Nuts shall be hexagon nut, bolts shall be tee head bolts. Nuts and bolts shall meet the requirements of ANSI/AWWA C111/A21.11.

2. Nuts and bolts for restrained push-on joint shall meet the requirements of the joint manufacturer.

7. Polyethylene encasement for ductile iron water mains shall be installed and shall meet the requirements of ANSI/AWWA C105/A21.5. Installation of the polyethylene encasement shall be omitted if written approval is made by the ductile iron pipe manufacturer and/or the Public Works Director.

B. Polyvinyl Chloride Water Mains (3" to 8")

1. Pipe

a. Polyvinyl chloride pipe shall meet the requirements of ANSI/AWWA C900, Class 150/DR18. Design and manufacture pipe for a working pressure of 150 psi plus 100 psi surge pressure. Additionally, a safety factor of 2.0 and a depth of cover, indicated on the drawings or as required by the manufacturer's and ANSI/AWWA specifications, shall be included.

b. Polyvinyl chloride pipe shall have ductile-iron-pipe-equivalent outside diameter.

Pipe joints shall be push-on type and meet the requirements of ANSI/AWWA C900. Do not use solvent-cement joints.

2. Fittings

a. Fittings shall be ductile iron and meet the requirements of ANSI/AWWA C110. Design and manufacture fittings for a pressure rating of 150 psi.

b. Line the inside surfaces of fittings with cement mortar lining and bituminous seal coating shall meet the requirements of ANSI/AWWA C104/A21.4. Coat outside surfaces of fittings with bituminous coating. Outside coating shall meet the requirements of ANSI/AWWA C110.

c. Fitting joints shall be mechanical joints. Mechanical joints shall meet the requirements of ANSI/AWWA C111/A21.11.

d. Mark each fitting. Marking shall meet the requirements of ANSI/AWWA C110.

3. Adapters

a. Adapters from polyvinyl chloride water mains to victaulic, flange joint valves or fittings shall be ductile iron. Adapters shall meet the requirements of ANSI/AWWA C110. Design and manufacture adapters for a pressure rating of 150 psi.

b. Line the inside surfaces of adapters with a single cement mortar lining. Cement mortar lining and seal coating shall meet the requirements of ANSI/AWWA C104/A21.4. Coat outside surfaces of adapters with bituminous coating, complying with ANSI/AWWA C110.

c. Adapter ends connecting to polyvinyl chloride water mains shall have plain ends or mechanical joints. Mechanical joints shall meet the requirements of ANSI/AWWA C111/A21.11.

d. Adapter ends connecting to victaulic, flange joint valves or fittings shall have joints complying with the specifications for the applicable valves or fittings.

4. Gaskets

a. Gaskets for polyvinyl chloride push-on joints shall meet the requirements of ANSI/AWWA C900.

b. Gaskets for mechanical joints shall meet the requirements of ANSI/AWWA C111/A21.11 and ASTM F477.

5. Nuts and bolts for mechanical joints shall be high strength, heat treated, alloy steel. Nuts shall be hexagon nuts, and bolts shall be tee head bolts. Nuts and bolts shall meet the requirements of ANSI/AWWA C111/A21.11.

2.3 PIPE AND FITTINGS SMALLER THAN 3-INCH

A. Pipe shall be Type K drawn copper and shall meet the requirements of ASTM B88.

B. Fittings and couplings shall be cast bronze and shall meet the requirements of ASTM B16.18. Construct and manufacture fittings and couplings for a pressure rating of 150 psi.

C. Unions shall be bronze and shall meet the requirements of ASTM B16.18. Design and manufacture unions for a pressure rating of 150 psi.

D. Flanges for connection of screwed joint pipe to flange joint valves or fittings shall be 125-16 cast iron, screwed companion flanges, complying with both ASTM A126 and ANSI B16.1.

E. Tape for screwed joints shall be teflon.

F. Gaskets for flange joints shall be 1/16-inch thick, full face and conform to ANSI/AWWA C111/A21.11. Gaskets shall be rubber or as approved by the Public Works Director.

G. Bolts for flange joints shall be steel, heavy hexagon head machine bolts. Nuts shall be steel, semi-finished, heavy hexagon nuts. Nuts and bolts shall meet the requirements of ASTM A307 for Grade B and be zinc-coated alloy steel.

2.4 VALVES

A. Butterfly Valves

1. Butterfly valves and operators shall meet the requirements of AWWA Standard C504. Valves and operators shall be Class 150B.

2. Buried butterfly valves shall have mechanical joints. Mechanical joints shall meet the requirements of AWWA C111. Butterfly valves installed above ground or in structures shall have flange joints as specified in AWWA Standard C504. Nuts, bolts, and gaskets for flange joints shall meet the requirements of ANSI/AWWA C110. Nuts and bolts shall be cadmium plated. Gaskets shall be full face and shall be red rubber, or equal.

3.Each buried butterfly valve shall have a manual operator and a 2inch operating nut. Valve opening direction shall be consistent with operation of existing valves in the waterworks in which the valves are installed, unless otherwise directed by the Engineer.

4. Each butterfly valve installed above ground or in a structure shall have a manual operator and handwheel.

B. Gate Valves

1. Buried gate valves 4-inches and larger shall be full ductile iron body, epoxy fusion bonded inside and out, non-rising stem gate valves. Valves shall meet the requirements of ANSI/AWWA C500 or C509 and have mechanical joint ends. Mechanical joints and joint accessories shall comply with ANSI/AWWA C111/A21.11. Valve opening direction shall be consistent with operation of existing valves in the waterworks where the valves are installed, unless otherwise directed by the Public Works Director.

2. Three-inch buried gate valves shall be full ductile iron body, epoxy fusion bonded inside and out, non-rising stem gate valves. Valves shall meet the requirements of ANSI/AWWA C500 or C509; except, ends shall be screwed. Screwed ends shall conform to ANSI B16.3. Valve opening direction shall be consistent with operation of existing valves in the waterworks where the valves are installed, unless otherwise directed by the Public Works Director.

1. Gate valves 4-inches and larger installed above ground or in structures shall be full ductile iron body, epoxy fusion bonded

2. inside and out, outside screw and yoke gate valves. Valves shall correspond to ANSI/AWWA C500 or C509. Outside screw and yoke gate valves shall have flange joint ends and malleable iron handwheels. Flange joints and accessories shall be as specified in ANSI/AWWA C110. Nuts and bolts shall be zinc-coated alloy steel. Gaskets shall be full face and rubber, or as approved by the Public Works Director.

3. Gate valves smaller than 4-inch installed above ground or in structures shall be bronze, 125 lb. S.W.P. double disc, screwed-in bonnet, rising stem, inside screw gate valves with screwed ends and malleable iron handwheels. Valves shall meet the requirements of federal specifications WASTEWATER-V-54d for Class A, Type III Valves.

C. Buried valves 2-inch and smaller shall be curb stops. Curb stops shall meet the applicable requirements of ANSI/AWWA C800, ASTM B-62 for 85-5-5-5 composition bronze, and USAS B2.1. Curb stops shall be Mueller H-10283, Ford B11 Series, or as approved by the Public Works Director.

D. Tapping Valves

1. Tapping valves shall comply with both ANSI/AWWA C500 or C509 and have flange mechanical joint ends. Double disc gate valve gates, gate rings and body-seat rings shall be oversized to permit entry and exit of tapping machine cutters.

2. Valve end connecting to tapping sleeve shall have a flange for bolting to the sleeve. The flange shall have a tongue which fits a recess in the sleeve. Tongues shall meet the requirements of MSS SP-60. Resilient seated gate valves having a port diameter equal to or exceeding 1/4 inch over nominal diameter shall not require a tongue. Flange dimensions and drilling shall meet the requirements of ANSI B16.1. Nuts, bolts, and gaskets for flange joints shall meet the requirements of ANSI/AWWA C110. Nuts and bolts shall be zinc-coated alloy steel, and gaskets shall be rubber, or as approved by the Public Works Director. Mechanical joints and accessories shall meet the requirements of ANSI/AWWA C111/A21.11. A full nominal diameter cutter shall be used for tapping. Tapping valves 14-inch and smaller shall be installed vertically. Tapping valves 16-inch and larger shall be installed horizontally and shall have bypass valves. Tapping valves installed horizontally shall have rollers and tracks. Valves 16-inch and larger shall have gear operators with enclosed gear cases suitable for buried service. Gear cases shall be extended type or totally enclosed type. Extended type gear cases shall have bolted side plates to cover stem and stuffing box.

E. Air and Vacuum Valves: Air and vacuum valves shall be as follows:

Size	Specification
½"	Apco No. 141WD, Val-Matic 100DWS, or equal
1"	Apco No. 142WD, Val-Matic 101DWS, or equal
2"	Apco No. 144WD, Val-Matic 102DWS, or equal
3"	Apco No. 146WD, Val-Matic 103DWS, or equal
4"	Apco No. 1604/152, Val-Matic 104DWS, or equal
6"	Apco No. 1606/153, Val-Matic 106DWS, or equal

2.5 VALVE BOXES

A. Valve boxes for butterfly valves and gate valves shall be cast iron. Valve boxes shall be two piece or three piece type. Each two piece box shall be complete with bottom section, top section and cover. Each three piece box shall be complete with base, center section, top section and cover. Valve boxes shall be extension type with slide or screw type adjustment. Each base and bottom section shall be the proper size for the valve served. Each valve box assembly shall be the proper length for the valve served. The minimum thickness of metal shall be 3/16-inch. Cast the word "WATER" in each valve box cover.

B. Valve boxes for curb stops shall be cast iron. Curb boxes shall be extension type. Each curb box shall be complete with foot piece, curb box and lid. Curb box shall be the following or as approved by the Public Works Director:

Curb Stop Size	Foot Piece	Curb Box with Lid & Plug
¾"	Mueller H-10391	Mueller H-10316
1"	Mueller H-10392	Mueller H-10316
1 ½"	Mueller H-10394	Mueller H-10336
2"	Mueller H-10395	Mueller H-10336

2.6 FIRE HYDRANTS

A. Fire hydrants shall be dry-barrel, compression shutoff, traffic model and comply with ANSI/AWWA C502. Main valve size shall be 5-1/4 inch. Inlets shall be 6-inch mechanical joint. Each hydrant shall have two 2-1/2-inch nozzles and one 5-inch Storz pumper nozzle. Nozzle threads and hydrant opening direction shall be consistent with existing fire hydrants in the waterworks in which the fire hydrants are installed, unless otherwise directed by the Public Works Director. Each hydrant shall be the proper length for the water main to which the hydrant is connected. Fire hydrant coating shall meet the requirements of ANSI/AWWA C502. Fire hydrants shall be Fire Protection Red within the Westfield Washington Fire Department jurisdiction or Caution Yellow within the Noblesville Fire Department jurisdiction. All installed hydrants shall be repainted per Section 3.3 (c). Hydrants shall be the Mueller Centurion, as manufactured by the Mueller Company and the Watereus Pacer, as manufactured by the Watereus Company.

B. Fire Hydrant Placement - Fire Hydrants shall be placed no farther apart than 300 feet in all residential subdivisions, subdivision sections, and other residential areas in which dwelling density meets or exceeds three dwelling units per gross acre. Fire hydrants shall be placed no further apart than 300 feet in all Industrial, Business, and Commercial areas, and all Industrial, Business, and Commercial uses. Such requirement shall be in full force and effect unless explicitly exempted by the Chief of the local fire department. For residential uses with densities less than three dwelling units per gross acre, the requirements as established in Table No. III-B-A of the Uniform Fire Code shall apply. Where there is any ambiguity or dispute concerning the interpretation of this requirement, the decision of the Chief of the local fire department shall prevail subject to appeal.

2.7 SPRINKLER SYSTEMS

Multi-family developments, duplexes, and hotels/motels shall be required to have sprinkler systems installed in the attics of said structure as approved by the Chief of the local fire department. Such requirement shall be in full force and effect unless explicitly exempted by the Chief of the local fire department. Where there is any ambiguity or dispute concerning the interpretation of this requirement, the decision of the Chief of the local fire department shall prevail subject to approval.

2.8 TAPPING SLEEVES

A. Tapping sleeves shall be stainless steel split sleeves. Each sleeve shall have a branch connection with a flange end. The inside diameter of each branch shall be over-sized to permit entry and exit of tapping machine cutters. Each flange shall have a recess to center a tapping valve. Recesses shall meet the requirements of MSS SP-60. Flange dimensions and drilling shall meet the requirements of ANSI B16.1. The sleeve dimensions shall be such that the sleeves will not leak when installed on cast iron, ductile iron, or polyvinyl chloride pipe with outside diameters shown in ANSI/AWWA Standards.

B. Tapping sleeves for 4-inch through 16-inch pipe shall be mechanical joint type. Design and manufacture tapping sleeves for a working pressure of 200 psi.

C. Tapping sleeves for 18-inch and larger pipe shall be mechanical joint type. Design and manufacture tapping sleeves for a working pressure of 150 psi.

2.9 TAPPING SADDLES

A. Design and manufacture tapping saddles for a working pressure of 200 psi. Saddle bodies shall be stainless steel. Saddle straps shall be corrosion resistant steel alloy. Saddle gaskets shall be positively confined O-ring gasket. The sleeve dimensions shall be such that the sleeves will not leak when installed on cast iron, ductile iron, or polyvinyl chloride pipe with outside diameter shown in ANSI/AWWA Standards.

B. Each saddle used for making a wet connection shall have a branch connection with a flange end. The inside diameter of each branch shall be oversized to permit entry and exist of tapping machine cutters. Each flange shall have a recess to center a tapping valve. Recesses shall meet the requirements of MSS SP-60. Flange dimensions and drilling shall meet the requirements of ANSI B16.1.

C. Each saddle used for making a dry connection shall have a branch connection with a flange or mechanical joint end. Flange dimensions and drilling shall meet the requirements of ANSI B16.1. Nuts and bolts for flange joints shall meet the requirements of ANSI/AWWA C110 and be zinc-coated alloy steel. Gaskets shall comply with ANSI/AWWA C110, be full face and rubber, or as approved by the Public Works Director. Mechanical joints and accessories shall meet the requirements of ANSI/AWWA C111/A21.11.

D. Gaskets used to seal joints between saddle bodies and tapped pipes shall be O-ring type, circular in cross section, and made of natural or synthetic rubber with a Durometer Hardness of 70 ± 5.

1. FLANGE-MECHANICAL JOINT ADAPTERS
2. AIR AND VACUUM VALVE CHAMBERS

Flange-mechanical joint adapters shall be Dresser Style 127, Smith-Blair Type 912 or as approved by the Public Works Director.

A. Air and vacuum valve chambers shall be 4-foot diameter precast concrete manhole barrels with precast concrete flat slab tops. Precast manhole barrels shall meet the requirements of ASTM C478.

B. Air and vacuum valve chamber access frames and cover shall be Neenah R-1915-G, or equal. Cast the word "WATER" in each cover.

2.12 WATER SERVICES

A. Pipe shall be seamless copper tubing and shall meet the requirements of ASTM B88, Type "K."

B. Fittings and Couplings: Couplings for copper tubing shall be copper to copper or copper to iron, as required, and shall meet the applicable requirements of AWWA C800, ASTM B-62 for 85-5-5-5 composition bronze, and ANSI B2.1. Fittings and couplings shall be Ford Products, Pack Type Compression Joints, or equal.

C. Service connections made to a PVC water main shall be made using a stainless steel saddle with a corporation stop.

PART 3 - EXECUTION

3.1 INSPECTION

Inspect water main pipe, fittings, valves, hydrants, and appurtenances prior to installation. Promptly remove damaged or unsuitable products from the job site. Replace damaged or unsuitable products with undamaged and suitable products.

3.2 LAYING OF WATER MAINS

A. Proper tools and facilities shall be provided and used by the Contractor for safe working conditions.

B. Lay and maintain pipe to the lines and grades shown on the drawings or to the minimum depth specified in this Article. Install fittings, valves and hydrants in the locations shown on the drawings.

C. When the exact location of buried utilities is unknown and piping is to be constructed parallel and close to said utilities, adjust the alignment of the piping to least interfere with these utilities. This applies unless otherwise shown on the drawings or specified by the Public Works Director.

D. Water mains shall be laid at least 10 feet horizontally from any existing sanitary sewer or sewage force main. The distance shall be measured from edge to edge of the pipe. Water mains crossing sanitary sewer or sewage force mains shall be laid to provide a minimum vertical distance of 18 inches between the outside of the water main and the outside of the sewer or force main. The 18-inch separation shall apply whether the water main is over or under the sewer or force main. Lay water mains at crossings of sewers and force mains so a full length of water main pipe is centered on the sewer or force main whenever possible. No water main shall pass through or come in contact with any part of a sanitary sewer manhole.

E. All piping shall be laid at a depth that provides at least 4'-6" of cover. Cover shall be measured as the vertical distance from the top of the pipe to the finish grade elevation.

F. Laying of water mains shall meet the requirements of ANSI/AWWA C600, unless otherwise specified in this Section.

G. Shape the bottom of the trench to give uniform circumferential support of the lower quarter of each pipe.

H. Do not lay pipe in water or when the trench or weather conditions are unsuitable for proper installation.

I. As each length of pipe is placed in a trench, joint the pipe being laid to the previously laid pipe. Bring the pipe to correct line and grade. Secure the pipe in place with bedding tamped under the pipe. Tamp bedding up to the centerline of the pipe.

J. Deflection from a straight line or grade shall not exceed the limits specified in this Section. If the alignment requires joint deflections in excess of the allowable deflection per joint, furnish and install fittings or a sufficient number of shorter lengths of pipe.

K. Provide thrust restraint at horizontal and vertical deflection fittings and at tees, plugs, tapping sleeves and tapping saddles. Restraint shall be concrete thrust blocking or restrained joint piping.

L. Where concrete thrust blocking is used, cover the fitting to be blocked with visqueen or a heavy duty grease to prevent adherence of the concrete to the fitting.

M. Block the open end of the pipe at the close of each day's work to prevent contamination from dirt or rain water and entry of any animal or foreign material.

N. Lower pipe, fittings, valves and hydrants into the trench by hand, hoists or ropes or other suitable tools or equipment that will not damage products, coatings or linings. Do not drop or dump pipe, fittings, valves, or hydrants into the trench.

O. Water main designs that require crossing a county legal drain shall be approved and constructed per the latest standards of the Hamilton County Surveyor's Office.

1. SETTING VALVES, VALVE BOXES AND FIRE HYDRANTS

2. A. Clean the interiors of valves and hydrants of foreign matter before installation. Tighten stuffing boxes. Inspect valves and hydrants in opened and closed positions to ensure all parts are in working condition.

3. B. Set valves and valve boxes plumb. Center valve boxes on the valves or valve operators. Locate valves outside the area of roads and streets where feasible. Tamp backfill around each valve box to a distance of 4 feet on all sides of the box or to the undisturbed trench face if less than 4 feet.

4. C. Set hydrants plumb with the pumper nozzle facing the street. The centerline of the outlet nozzles shall be at least 18 inches or at most 30 inches above finished grade at a hydrant. Install hydrant extensions where required to bring hydrant to proper elevation. Set each hydrant upon a slab of stone or concrete not less than 4 inches thick and 15 inches square. Wedge the side of each hydrant opposite the pipe connection against the undisturbed trench face to prevent the hydrant from blowing off the branch connection. Compact the backfill around each hydrant to finish grade. Furnish and install a gate valve and valve box in each hydrant branch connection. All installed hydrants meeting the requirement of Section 2660; Para. 2.6 (a), shall be painted, by the contractor, with two (2) coats of either MAB Fire Protection Red (7068), within the Westfield Washington Fire Department jurisdiction or MAB Caution Yellow (7077), within the Noblesville Fire Department jurisdiction.

1. CONNECTING TO EXISTING MAINS

A. The Contractor shall locate and verify exact size of all existing mains, both horizontally and vertically. Additionally, allow adequate time, after location and prior to making new connections, for changes in the connection location and size. Backfill excavation immediately after main is located and measured.

B. Make each wet connection with a tapping valve and tapping sleeve. Install and hydrostatically test each tapping valve and tapping sleeve assembly prior to tapping existing water main. Inspect each tapping valve prior to tapping existing water main. Open and close tapping valves, and inspect tapping valves in opened and closed positions to ensure all parts are in working condition. Inspect each tapping valve immediately before connecting tapping machine to ensure the tapping valve is open. Install watertight plug on the tapping valve outlet and backfill excavation if existing water main is not tapped within 48 hours after installing tapping valve and tapping sleeve or tapping saddle assembly. Install watertight plug on the tapping valve outlet and backfill excavation if new water main is not connected to tapping valve within 48 hours after making tap in existing water main.

C. Make each dry connection with fittings and valves indicated on the drawings. Furnish and install sleeves required to complete connections. All required pipe, fittings, valves, tools, and equipment shall be at the connection site prior to starting connection. Wash interior of new pipe, fittings, and valves with a solution containing 50 mg/1 of chlorine prior to making connection. Make connections at night and on weekends when required. The Owner will operate existing valves. Install sufficient water main and restrain joints so existing water mains can be up in service immediately after connection is completed. Inspect joints and eliminate leaks immediately after connection is completed and existing mains are put in service. Install watertight plugs on open ends of pipe and valves, and backfill excavation if new water main is not connected to dry connection within 48 hours after completing dry connection.

3.5 JOINTING

A. Ductile Iron Push-on Joints

1. Pipe must be cleaned and installed as specified by the manufacturer and ANSI/AWWA C600 requirements. Additionally, all lumps, blisters, excess bituminous coating and foreign material must be removed from the bell and spigot end of each pipe.

2.For restrained push-on joints, move the loose retainer ring into position against the retainer bar on the spigot end of the pipe being installed. Loosely assemble the joint bolts and nuts.

3. Deflect pipe after jointing, if deflection is required. The amount of deflection shall not exceed the limits shown in the following table:

Pipe Size	Maximum Deflection Angle	Maximum Deflection Based Upon 18-Foot Pipe Length
4"	5°	18-1/2"
6"	5°	18-1/2"
8"	5°	18-1/2"
10"	5°	18-1/2"
12"	5°	18-1/2"

4. For restrained push-on joints, pull the nuts to a uniform tightness by hand or with a short wrench. Do not pull the spigot of the pipe being installed against the back of the bell of the receiving pipe. Engage at least a full nut on each bolt when joint deflection is required.

B. Polyvinyl Chloride Push-on Joints

1. Pipe must be cleaned and installed as specified by the manufacturer's requirements. Additionally, all joints must be free of all foreign material.

2. Deflect the pipe after jointing, if deflection is required. The amount of deflection shall not exceed the limits recommended by the pipe.

C. Mechanical Joints

1. Pipe must be cleaned and installed as specified by the manufacturer and ANSI/AWWA C600 requirements. Additionally, all lumps, blisters, excess bituminous coating and foreign material must be removed from the bell and spigot end of each pipe.

2. Evenly tighten the nuts using a torque wrench. The torque shall be within the range listed in the following table:

Pipe Size	Bolt Size	Torque Range
4" thru 24"	3/4"	75 to 90 ft.-lb.

2. Deflect pipe, fittings or valves after jointing, if deflection is required. The amount of deflection shall not exceed the limits shown in the following table:

Pipe Size	Maximum Deflection Angle	Maximum Deflection Based Upon 18-Foot Pipe Length
4"	8° - 18'	31"
6"	7° -7'	27"
8"	5° - 21'	20"
10"	5° - 21'	20"
12"	5° - 21'	20"
14"	3° - 35'	13-1/2"
16"	3° - 35'	13-1/2"
18"	3° -0'	11"
20"	3° -0'	11"
24"	2° - 23'	9"

D. Shouldered Type Joints

1. Pipe must be cleaned and installed as specified by the manufacturer and ANSI/AWWA C600 requirements. Additionally, all lumps, blisters, excess bituminous coating and foreign material must be removed from the bell and spigot end of each pipe.

2.The tightening torque shall not exceed the limits recommended by the joint manufacturer.

3. Deflect pipe, fittings, adapters or valves after jointing, if deflection is required. The amount of deflection shall not exceed the limits recommended by the joint manufacturer.

E. Threaded Joints

1. Pipe must be cleaned and installed as specified by the manufacturer and ANSI/AWWA C600 requirements. Additionally, all lumps, blisters, excess bituminous coating and foreign material must be removed from the bell and spigot end of each pipe.

2.Do not overtighten joints.

3. Backing off made-up threaded joints to facilitate fit-up or alignment will not be permitted

F. Flange Joints

1. Pipe must be cleaned and installed as specified by the manufacturer and ANSI/AWWA C600 requirements. Additionally, all lumps, blisters, excess bituminous coating and foreign material must be removed from the bell and spigot end of each pipe.

2. Do not overtorque nuts and bolts.

3.6 RESTRAINING AND SUPPORTS

A. Thrust Blocking

1. Construct thrust blocks of concrete having a 28-day compressive strength of at least 2,000 psi.

2.Lubricate fitting surfaces to prevent bonding between fittings and thrust blocks.

3. Construct thrust blocks between fittings and undisturbed soil. The area of thrust blocking bearing on undisturbed soil shall be at least the area indicated on the drawings. Construct thrust blocking so pipe and joints are accessible for repair and joint flexibility is not impaired.

B. Restrained joint piping shall be as specified in this Section. Distance from fitting to end of restraint shall not be less than that indicated on the drawings.

C. Mechanical Joint Rod Restraint

1. Mechanical joint rod restraint shall be from fitting to fitting.

2. The number of rods shall conform to the following table:

Pipe Size	Rod Size	Minimum No. of Rods
4"	3/4"	2
6"	3/4"	2
8"	3/4"	4
10"	3/4"	4
12"	3/4"	6
14"	3/4"	6
16"	3/4"	8
18"	3/4"	8
20"	3/4"	10
24"	3/4"	16

D. Pipe Supports

1. Furnish and install supports required to hold pipe, fittings and valves at the lines and grades indicated on the drawings, without causing strain upon pipe, fittings and valves.

2.Support piping by suitable saddle stands, concrete piers or hangers.

3. Locate supports where necessary, at least 8 feet on center.

3.7 AIR AND VACUUM VALVE CHAMBERS

A. Install air and vacuum valve chambers as indicated on the drawings.

B. Mortar for joints and plastering shall consist of one part Portland Cement and two parts fine sand. Lime may be added to the mortar used for brick work. Add lime in an amount of not more than 20% of the volume of cement. Complete fill joints between precast chamber sections. Joints shall be smooth and free from surplus mortar on the inside surface of the chamber. Plaster brick at the top of chambers with 1/2-inch of mortar.

C. Set frames and covers so the top of the cover will be flush with finished grade.

D. Vent air and vacuum valve outlets to the surface. Terminate vent outlets 3 feet above finished grade. Screen vents to prevent the entrance of insects. Paint air and vacuum valve vents yellow.

3.8 HYDROSTATIC TEST

A. Hydrostatic tests shall be performed on all water mains installed. The Contractor shall make arrangements with the Town Engineer and/or Town Representative for scheduling each test. Each test shall be performed on the day mutually agreed upon and in the presence of the Town Engineer and/or Town Representative.

B. The Contractor shall furnish equipment, temporary piping, pumps, fittings, gauges, and operating personnel necessary to conduct the tests. Water for testing may be obtained from the Owner.

C. The water mains may be tested in sections between valves when there is one or more intermediary valves in a water main.

D. Test procedures shall meet the requirements of AWWA Standard C600.

E. Each section of water main shall be complete, and thrust blocks shall have been in place for not less than 10 days prior to being tested.

F. Expel all air from the water main test section during the filling of the main and prior to the application of test pressure. Tap the water main at high points, if necessary, to release all air from the water main. Plug taps after the test is successfully completed. Plugs shall be watertight.

G. Test water mains at a static pressure of 150 pounds per square inch over a period of two consecutive hours. The test will be considered successful when the pressure drop over the test period is 5 pounds per square inch or less. If the pressure drop exceeds 5 pounds per square inch.

3.9 FLUSHING

A. Flush water mains and fire hydrants prior to disinfection. Flush water mains with a flushing velocity of at least 2.5 feet per second. Following are flows required to provide a flushing velocity of 2.5 feet per second:

Pipe Size	Inside Diameter	Flow at a Velocity of 2.5 Feet perSecond
½"	0.622"	2.4 gpm
¾"	0.824"	4.2 gpm
1"	1.05"	6.8 gpm
1¼"	1.38"	12 gpm
1½"	1.61"	16 gpm
2"	2.07"	27 gpm
2½"	2.47"	38 gpm
3"	3.07"	58 gpm
4"	4"	98 gpm
6"	6"	220 gpm
8"	8"	390 gpm
10"	10"	620 gpm
12"	12"	880 gpm
14"	14"	1,200 gpm
16"	16"	1,600 gpm
18"	18"	2,000 gpm
20"	20"	2,500 gpm
24"	24"	3,600 gpm

B. Flush water mains and hydrants until the water discharged is clear.

3.10 DISINFECTION

A. Disinfect all new and repaired water mains prior to placing them in service. Disinfect pipe, fittings, valves and hydrants with a chlorine solution containing 50 mg/l ± 5 mg/l of available chlorine.

B. The chlorinating material shall be calcium hypochlorite . Calcium hypochlorite shall have 70% available chlorine by weight, and sodium hypochlorite shall have 5.25% to 14.7% available chlorine. Placing chlorine tablets in the mains during construction is not an acceptable method of disinfection. The following table shows the quantity of hypochlorite required to produce 50 mg/l of available chlorine per 100 feet of pipe.

Pipe Size	Inside Diameter	Chlorine Gas		
½"	0.622"	0.00066	0.0094	0.015
¾"	0.824"	0.0012	0.0017	0.026
1"	1.05"	0.0019	0.0027	0.043
1¼"	1.38"	0.0032	0.0046	0.074
1½"	1.61"	0.0044	0.0063	0.10
2"	2.07"	0.0073	0.010	0.17
2½"	2.47"	0.010	0.015	0.24
3"	3.07"	0.016	0.023	0.37
4"	4"	0.027	0.039	0.62
6"	6"	0.061	0.087	1.4
8"	8"	0.11	0.16	2.5
10"	10"	0.17	0.24	3.9
12"	12"	0.24	0.35	5.6
14"	14"	0.33	0.48	7.6
16"	16"	0.44	0.62	10
18"	18"	0.55	0.79	13
20"	20"	0.68	0.97	16
24"	24"	0.98	1.40	22
30"	30"	1.5	2.2	34
36"	36"	2.2	3.1	50
42"	42"	3.0	4.3	69
48"	48"	3.9	5.6	90
54"	54"	5.0	7.2	110

C. Tap water mains where required to inject chlorine solution into all pipe, fittings, valves and hydrants installed and repaired. Inject chlorine solution into water mains. Leave the chlorine solution in the water mains for 24 hours or longer. Open and close valves in lines being disinfected several times during contact period. Following the contact period, flush the water mains with potable water until the chlorine residual is 1.0 mg/l or less.

D. Bacteriological Tests - The water main shall be tested for bacteriological quality after disinfection and final flushing. Two or more successive sets of bacteriologically satisfactory samples taken at 24-hour intervals must be recorded before the facilities are released for use. Bacteriological testing shall meet the requirements of the applicable regulatory agency. Disinfection shall be repeated if the piping is not bacteriologically acceptable. Repeat disinfection and testing until the mains are approved for service by the applicable regulatory agency.

E. Hose connections on fire hydrants shall not be used for collecting samples. Contact the applicable regulatory agency for sampling criteria and procedures.

F. The time for disinfection, bacteriological testing, and approval of the main for service shall be included in the contract time.

G. The Contractor shall be responsible for disposal of chlorinated disinfection waters. If the water is discharged in an open channel or storm sewer, the Contractor shall dechlorinate the disinfection waters to 0.05 mg/L of total chlorine.

3.11 COMPLETION SCHEDULING

Complete water mains as they are installed. Test, flush, sterilize, and place in service each part of the water main which is complete and can be placed in service without preventing work to continue on uncompleted parts of the new water mains.

PART 4 - FIGURES

4.1 INDEX FIGURE DESCRIPTION

W-1 Water Main Installation Detail
W-2 Thrust Block Details
W-3 Restrained Joint Details
W-4 Steel Casing Detail
W-5 Connection to Existing Main
W-6 Gate Valve and Box
W-7 Fire Hydrant Details
W-8 ¾" Single Pit
W-8a ¾" Water Meter and Pit Detail (ForResidential)
W-9 1" Water Meter and Pit Detail
W-10 2" Water Meter and Pit Detail
W-11 Double Water Service Detail
W-11a ¾" Dual Water Meter and Pit Detail (ForResidential)
W-12 Irrigation System Connection Detail (Residential)
W-13 Standard Fire Service and Meter Vault

END OF SECTION 02660

REVISIONS:

DAVID A. CLARK
REGISTERED
No. 19300219
STATE OF INDIANA
PROFESSIONAL ENGINEER

DATE: 06/27/08

THIS DRAWING AND THE IDEAS, DESIGNS AND CONCEPTS CONTAINED HEREIN ARE THE EXCLUSIVE INTELLECTUAL PROPERTY OF THE SCHNEIDER CORPORATION, AND ARE NOT TO BE USED OR REPRODUCED, IN WHOLE OR IN PART, WITHOUT THE WRITTEN CONSENT OF THE SCHNEIDER CORPORATION.

© COPYRIGHTED BY THE SCHNEIDER CORP. (2008)

Schneider

THE SCHNEIDER CORPORATION
Historic Fort Harrison
8901 Otis Avenue
Indianapolis, IN 46216–1037
Telephone: 317.826.7100
Fax: 317.826.7300
www.schneidercorp.com

Architecture
Civil Engineering
Environmental Engineering
Geotechnical Services
GIS * LIS
Home Builder Services
Interior Design
Land Surveying
Landscape Architecture
Transportation Engineering

CENTENNIAL SOUTH EXPANSION
WESTFIELD, INDIANA

ESTRIDGE DEVELOPMENT CO., INC.
CARMEL, INDIANA

DATE: 06/27/08	PROJECT NO.: 3915.004
DRAWN BY: PCJ	CHECKED BY: JLF

SHEET TITLE: WATER MAIN SPECIFICATIONS FOR THE TOWN OF WESTFIELD

DRAWING FILES: R:\3K\3915\004\DWGS\C901–C905

SHEET NO.: C902

R:\3k\3915\004\dwgs\C901-C905.dwg, 6/30/2008 1:12:02 PM, KIP 7204.pc3

SECTION 02500 - PAVING AND SURFACING

PART 1 - GENERAL

1.1 DESCRIPTION

A. Scope: This section covers all work involved in the installation of new pavement, walks, and curbs, and the repair and replacement of existing streets, roads, highways, drives, parking areas, curbs, gutters, sidewalks, and other paved areas damaged or destroyed during construction.

B. Related Work Specified in the following Section
1. Section 02222 Earthwork for Utilities Subgrade Preparation

C. Codes, specifications, and standards referred to by number or title shall form a part of this specification to the extent required by the reference thereto. Except as specifically modified in this specification, paving and surfacing operations, materials and testing will comply with the most current revisions of applicable sections per the latest version of the Indiana Department of Transportation Standard Specifications.

D. Definitions

1. Abbreviations

a. INDOTSS Indiana Department of Transportation's Standard Specifications.

b. AASHTO American Association of State Highway & Transportation Officials.

c. ACI American Concrete Institute.

d. ASTM American Society for Testing & Materials.

e. NRMCA National Ready Mix Concrete Association.

1. Rock:
A natural aggregate of mineral particles connected by strong and permanent cohesive forces. Rock includes limestone, sandstone, dolomite, granite, marble, and lava.

2.Subgrade:
The prepared and compacted soil immediately below the pavement or walk system and extending to such depth as will affect the structural design.

3.Subbase:
The layer of specified or selected material of designed thickness placed on a subgrade to support a base course

and surface course.

4.Base Course:
The layer of specified or selected material of designed thickness placed on a subbase to support a binder or surface course.

5.Binder Course:
The layer of specified or selected material of designed thickness placed on a base course to support a surface course.

6. Surface Course:
The layer of specified or selected material of designed thickness placed on a subbase or base course to support

the traffic load.

1.2 QUALITY ASSURANCE

A. The Developer/Contractor shall employ, at the request of the Westfield Public Works Department or designee, and pay for the services of an independent testing laboratory (unless otherwise noted) to perform specific services and necessary field density tests. The Developer/Contractor shall demonstrate to the Town of Westfield Public Works Department or designee that proper compaction has been obtained and proper asphalt and concrete mix designs are in compliance with the specifications.

B. Mixing Plant: Prior to placing any hot asphalt concrete pavement or Portland cement concrete pavement, the Contractor shall provide the Westfield Public Works Department or designee the name and location of the bituminous mixing or concrete mixing plant and the type and composition of mixes the Contractor proposes to use in the work.

C. Paving and surfacing shall comply with the tolerances specified in Sections 401.15 (Bituminous), 501.15, 501.16 and 501.23 of INDOTSS.

1. Subgrade and subbase shall be within 1/2 inch of dimensions indicated on drawings.

2. Bituminous base shall not vary longitudinally more than 1/4 inch from a 10-foot straightedge. Bituminous and concrete surfaces shall not vary more than 1/8 inch from a 10-foot straightedge.

3. Finished surface shall be within 1/4 inch of dimensions indicated on drawings.

D. Asphalt and concrete pavement shall be installed by a contractor whose prime business is asphalt or concrete paving.

1.3 SUBMITTALS

A. Submittals shall be as specified in the General Conditions and Section 01001, General Requirements.

B. Submit the following:

1. Name and location of bituminous mixing plant or concrete ready-mix plant. Mixing plants and equipment shall meet the requirements of INDOTSS, Sections 401 and 501.

2.Type and composition of proposed materials and mixes. Job mix formulas shall be prepared and submitted for approval to the Engineer in accordance with INDOTSS 402 and 501. It shall include standard bituminous information including, but not limited to, aggregate gradation, binder content, maximum specific gravity, and air voids.

3. Certified copies of reports of tests specified in this Section and required by the referenced standards.

1.4 JOB CONDITIONS

A. Do not place paving and surfacing materials on a wet surface, pumping subbase or when weather conditions would prevent the proper construction of paving and surfacing.

B. Do not place aggregates on frozen subgrade. Do not place aggregates when air temperature is below 35ºF.

C. Bituminous materials are to be placed in accordance with INDOTSS 402.10, 405.04, and 406.05.

D. When air temperatures are at or below 35 degrees F, an admixture is required to be added to the concrete to prevent freezing.

E. Do not place paving and surfacing materials when natural light is not sufficient to properly observe work or operations.

1.5 GRADE ADJUSTMENT OF EXISTING STRUCTURES

A. When grade adjustment of existing structures is required, the manhole frames, covers and gratings, and the gas and water valve boxes and covers, shall be removed and reconstructed to grade as required.

B. On resurfacing work, the castings and boxes shall be adjusted to grade after the last binder course has been laid and before placing the surface course.

C. All castings, frames and valve boxes adjusted to grade shall be done in advance of the final paving and shall be paid for by the Contractor as part of the project, unless specifically identified as an item for payment in unit price contracts.

1.6 CONTRACTOR'S ORGANIZATION

A. The Contractor shall be a firm who's prime business is asphalt or concrete paving. The Contractor shall have a competent supervisor on the site during the progress of the work, acting for the Contractor in all matters concerning the work. He shall have the authority to receive directions and act upon them for the Town through the Westfield Public Works Department or designee.

B. The Contractor shall keep a set of Plans and Specifications available on the site and in good condition.

1.7 TRAFFIC CONTROL

The Contractor shall plan construction operations so that existing local traffic access can be maintained. During the construction, he will also maintain appropriate use of barricades, lights, flagmen and other protective devices, whether specified for the project or required by the local governing authority. Traffic control devices used for maintenance of traffic shall comply with the Indiana Manual on Uniform Traffic Control Devices.

PART 2 - PRODUCTS

2.1 AGGREGATE

A. Fine aggregates shall consist of natural sand or manufactured sand produced by crushing rock, shells, air-cooled blast furnace slag, or wetbottom boiler slag.

1. Fine aggregates used in Portland cement concrete and bituminous pavements shall be free from injurious amounts of organic impurities. When subjected to the colorimetric test for organic impurities and a color darker than the standard is produced, it shall be tested for effect of organic impurities on strength of mortar in accordance with AASHTO T 71. If the relative strength at 7 and 28 days, calculated in accordance with section 10 of T 71, is less than 95%, it shall be rejected.

B. Coarse aggregates shall consist of clean, tough, durable fragments of crushed rock, crushed or uncrushed gravel or shells, or crushed and processed air-cooled blast furnace slag. These materials shall not contain more than 15% flat or elongated pieces and shall not contain particles with an adherent coating. Flat or elongated pieces will be described as pieces having a length in excess of four times its width.

C. Coarse aggregates shall comply with INDOTSS, Section 904.02. Fine aggregates shall comply with INDOTSS, Section 904.01.

2.2 BITUMINOUS MATERIALS

A. Petroleum asphalt cement shall be homogeneous, free from water, and shall not foam when heated to 347ºF.

1. Petroleum asphalt cement shall be PG Binder, grade PG 64-22.

2. Petroleum asphalt emulsion shall be AE-60.

B. Bituminous materials for prime coat shall consist of:

1. Cut-back asphalt - MC-70; or
2. Asphalt emulsion - AE-P.
3. Materials shall conform to INDOTSS Sections 902.03 and 902.04.

C. Bituminous materials for tack coat shall consist of:

1. Asphalt emulsion - AE-T.

2. Materials shall conform to INDOTSS 902.04.

D. Bituminous materials for seal coat shall consist of:

1. Asphalt emulsion - RS-2, AE-90, AE-150, HFRS-2.
2. Materials shall conform to INDOTSS Sections 902.03.

E. Cover aggregate shall consist of:

1. Coarse aggregates, Class A or B, size no. 8, 9, 11 or 12.
2. Fine aggregate (natural sand only), size no. 23 or 24.
3. Materials shall conform to INDOTSS Sections 904.02 and 904.01, respectively.

2.3 HOT MIX ASPHALT (HMA)

A. Hot mix asphalt (HMA) shall consist of an intimate mixture of coarse aggregate, fine aggregate (including mineral filler if required), and asphalt cement or emulsion combined in proportions specified in INDOTSS Section 402.04.

B. When the use of one type or source of aggregate or binder is started, the use of that same type or source shall be continued for the entire lift being constructed, unless otherwise directed by the Engineer.

C. The use of recycled materials, RAP or ARS, shall not be permitted unless otherwise directed and approved by Engineer.

D. Preparation of HMA mixtures shall comply with the requirements of INDOTSS Section 402.04.

2.4 PORTLAND CEMENT CONCRETE

A. Cement shall be Portland cement and shall meet the requirements of ASTM Specification C 150, ACI 301, and ACI 318. Cement shall be Type 1 for normal use, Type 1A where air entrainment is desired, or Type III or Type IIIA where high early strength is desired and authorized by the Engineer. Blended hydraulic cements which meet the requirements of ASTM Specification C 595 Type 1P Portland pozzolan cement may be used where a more watertight concrete is required. Fly ash may also be used as a partial cement replacement for Types 1 or 1A. Cement shall meet requirements specified in INDOTSS Section 901.

B. Regular fine and coarse aggregates shall meet the requirements of ASTM Specification C 33. Aggregate shall be crushed limestone with a maximum size of 3/4 inch, except in mass concrete the maximum size may be 11/2 inches.

1. Lightweight fine and coarse aggregates shall meet the requirements of ASTM Specification C 330.

2. Insulating fine and coarse aggregates shall meet the requirements of ASTM Specification C 332.

C. Water shall be potable, clean, and free from injurious amounts of oils, acids, alkalis, organic materials, or other substances that may be deleterious to concrete or steel. A maximum of 500 mg/L of chloride ion may be present in the water.

D. Air entraining admixtures shall meet the requirements of ASTM Specification C 260.

1. Water reducing and retarding admixtures shall meet the requirements of ASTM C494, Type A or Type D; however, they shall contain no chlorides, be nontoxic after 30 days and compatible with the air entraining admixtures. The amount of admixture added to the concrete shall be in accordance with the manufacturer's requirements. Furnish a compliance statement that the admixture used satisfies all requirements of this specification. Evidence that the admixture is included in the approved list of the INDOTSS Division of Materials and Tests, in accordance with

2. INDOTSS Section 912.03, will satisfy the requirement for a compliance statement.

3. Fly ash shall meet the chemical and physical requirements of ASTM C 618 for mineral admixture Class F, except loss on ignition shall not exceed 6%. Fly ash shall be sampled and tested in accordance with ASTM C 311 prior to use.

E. Reinforcing steel shall meet the requirements of ASTM Specification A 615, Grade 60.

1. Welded wire fabric or wire mesh shall meet the requirements of ASTM A 185.

2. Reinforcing steel and appurtenances shall follow INDOTSS Section 910.01.

F. Preformed expansion joint filler shall meet the requirements of ASTM Specification D 1752, Type III.

1. Hot-poured elastic joint filler shall meet the requirements of ASTM Specification D 1190.

2. Waterproof expansion joint filler shall meet the requirements of ASTM Specification D 1850.

3. Joint materials specified in INDOTSS Section 906 may be used, approved by the Engineer.

G. Concrete pavement shall be wet cured by using burlap, waterproof blankets, or ponding; or by using a membrane compound. If the membrane method is used, the compound shall be Type 2, complying with AASHTO M148 for white pigmented compound. A pressure sprayer capable of applying a continuous uniform film to the pavement surfaces will be required.

H. Dowel bars shall be smooth, round bars of plain billetsteel conforming to ASTM A615, Grade 40, and free of any deformation or foreign material that would restrict slippage in concrete. Dowel bars shall be coated as required by INDOTSS. For expansion joints, each bar shall be provided with a metal cap, or approved plastic cap, on one end that will provide for ample movement of the slabs.

1. Dowel bars and assemblies shall conform to the requirements of INDOTSS Section 501.14 (f).

I. Concrete base shall meet the requirements of INDOTSS Section 307.

J. Reinforced concrete pavement shall meet the requirements of INDOTSS Section 501.

K. Reinforced concrete for sidewalks and steps shall meet the requirements of INDOTSS Section 604.

L. Reinforced concrete for curbing shall meet the requirements of INDOTSS Section 605.

1. UNDERDRAINS Underdrain material shall be 6-inch polyethylene perforated pipe.

2. PART 3 - EXECUTION

2. GENERAL

A. The Contractor is responsible to provide equipment, workmanship and materials required to achieve a finished product that meets these specifications.

B. Use compaction equipment suitable to the material being placed. Compacting equipment shall include at least one piece of equipment capable of providing a smooth even surface on the pavement surface course.

C. Prior to placing paving and surfacing materials, shape subgrade as required to produce finished pavement grades and cross-sections shown on drawings.

D. Do not place paving and surfacing material before subgrade is reviewed (proof roll) and accepted by the Westfield Public Works Department or designee. Do not place paving and surfacing materials on a frozen or muddy subgrade.

E. Compact subgrade to not less than 100% of its maximum density as determined in accordance with AASHTO T99.

F. Provide adequate drainage at all times to prevent water from standing on subgrade, pavement or walks.

3.2 SUBGRADE

The subgrade material and testing shall comply with INDOTSS Section 207, before placement of subbase.

3.3 SUBBASE PREPARATION

Provide 8 inches of subbase in locations where pavement is to be placed on a material other than Special Backfill. Subbase shall meet the requirements of INDOTSS Section 304.

3.4 AGGREGATE BASE, SURFACE, OR SHOULDERS

A. Aggregate base, surface, or shoulders shall consist of crushed rock or gravel. The aggregate type shall be suitable for the area in which the project is located. The aggregate thickness shall be as shown on the drawings and as specified herein.

B. Aggregate shall be Type "O" mix, unless otherwise specified by the Westfield Public Works Department or designee.

C. Compacted aggregate materials and construction shall conform to INDOTSS Section 303.

D. If the required thickness of the aggregate (Type O) exceeds 4 inches, the material shall be placed and compacted in separate lifts no less than 2 inches nor more than 4 inches of compacted depth. If Type P aggregate is used, it may be placed in individual lifts with a thickness of up to 6 inches.

E. If spreading devices are used which will ensure proper depth and alignment, forms will not be required; otherwise, forms shall be required. Forms shall be of wood or steel, adequate in depth, straight, of uniform dimensions and equipped with positive means for holding the form ends rigidly together and in line. Segregation of material shall be avoided by any spreading method used. No payment will be made for aggregate placed beyond the dimensions shown on the drawings.

F. Compact material in each lift after material is spread and shaped. Compact material to not less than 100% of maximum dry density as determined by AASHTO T99. Use construction procedures, including sufficient wetting and number of passes, to ensure specified density is attained.

G. The Contractor shall employ an independent testing laboratory to perform field density tests to demonstrate proper compaction of aggregate surface pavement, if requested by the Westfield Public Works Department or designee.

H. In a brick surfaced street, unless specifically excepted and pending the structural adequacy of any remaining brick, the Contractor may remove all brick and enough base material to allow full width repaving using either a bituminous or concrete pavement; or of providing a HMA base and HMA intermediate for the full depth of the brick across the trench and then replace the entire street with 1 inch of HAC surface.

I. Unless otherwise shown on the drawings, the minimum section (excluding subgrade) of reinforced concrete shall be 6 inches of compacted #53, Type "O" aggregate base and 6 inches of 4,000 psi reinforced concrete.

J. Unless otherwise shown on the drawings, for a street with a brick base and an asphalt surface, the replacement section shall be full depth asphalt from the bottom of the brick base to the top of the asphalt surface. The top 1 inch shall be #11 HMA surface.

K. Unless otherwise shown on the drawings, for a street with a concrete base and an asphalt surface, the replacement section shall be a new concrete base, not less than 6 inches thick with #5 HMA base to within 1 inch of the existing grade and then 1 inch of #11 HMA surface.

L. Unless otherwise shown on the drawings, chip and seal pavements shall have 8 inches of compacted aggregate base (#53, Type "O" crushed stone) and 1 inch processed bituminous coated aggregate pavement placed and rolled as specified in INDOTSS Section 404.

M. Unless otherwise shown on the drawings, gravel pavement shall be replaced with 6 inches of #53, Type "O" compacted stone or gravel aggregate as specified in INDOTSS Section 303.

3.5 HOT MIX ASPHALT

A. This work shall consist of constructing one or more courses of HMA base, intermediate, and wedge leveling or surface mixtures on a prepared foundation in accordance with these specifications and in reasonably close conformance with the lines, grades, thicknesses, and typical cross sections shown on the plans or established by the Engineer.

1. If the required finished depth of any course is to exceed three times the top size of the aggregate used as shown by actual screen analysis, the course shall be constructed in two or more lifts, as directed.

2. Mix type shall be as indicated on the drawings, without exception, unless otherwise approved in writing by the Engineer.

a. Job mix formulas shall be prepared and submitted for approval in accordance with INDOTSS 402. The job mix formula shall include standard bituminous mixture information including, but not limited to, aggregate gradation, binder content, maximum specific gravity, and air voids.

3. Materials and construction requirements shall comply with the requirements of INDOTSS Section 402.

B. If the previously constructed course is granular, a prime coat will be required.

1. Apply prime coat uniformly at a rate of 0.25 to 0.80 gallon per square yard depending on condition of surface and amount of loose aggregate.

2. Apply prime coat with a pressure distributor. Temperature of prime coat shall not exceed 150ºF.

3. Squeegee excess prime coat from the subbase surface. Correct deficient or skipped area.

4. Prime coat shall be placed in accordance with INDOTSS Section 405.07.

C. Place and spread bituminous base mixture with a bituminous paver. In areas inaccessible to a paving machine, place and spread bituminous base mixture by other acceptable mechanical or hand methods.

D. Tack coat shall be placed on existing bituminous or concrete surfaces before a new lift of bituminous material is added. Apply tack coat uniformly at a rate of 0.06 gallon per square yard (0.000252 ton per square yard).

1. Patch and clean existing surface. The surface shall be free of irregularities and provide a reasonably smooth and uniform surface to receive the tack coat. Remove and replace unstable corrugated areas with suitable patching materials.

2. Tack coat shall be placed in accordance with INDOTSS Sections 406.03 through 406.05.

E. Placement and compaction of hot mix asphalt (HMA) shall conform to INDOTSS Sections 402.08 through 402.11.

F. Place binder used for wedging or leveling, approaches and feathering by mechanical methods or acceptable hand methods for placing and spreading in accordance with INDOTSS Section 400.

3.6 SEAL COAT AND COVERING AGGREGATE (CHIP AND SEAL)

A. Application shall be as follows

Cover Rate of Application Per Square Yard Aggregate Aggregate Bituminous Material Seal Type Size Number Pounds Gallons at 60ºF

1-Single Application 23, 24 12-15 0.12-0.16 (only AE-90 or AE-150)
2-Single Application 12 14-17 0.29-0.33
5-First Application 11 16-20 0.36-0.40
Second Application 12 16-19 0.33-0.37

B. Seal coat and covering aggregate shall be placed in accordance with INDOTSS Sections 404.04 through 404.08.

3.7 PORTLAND CEMENT CONCRETE PAVEMENT

A. Portland cement concrete pavement shall consist of a coarse aggregate base (if required) and a reinforced or unreinforced Portland cement concrete surface, as shown on the drawings

1. Use No. 53, Type "O" coarse aggregate for subbase, unless otherwise shown or specified.

2. Pavement cross-section shall be as shown on drawings.

B. Where an aggregate base course is shown or specified, it shall be constructed in accordance with Article 3.3 of this specification.

C. Portland cement concrete pavement operations and materials shall comply with INDOTSS Section 501 unless otherwise specified by the Engineer.

1. Alternate equipment to that specified in INDOTSS, Section 501 shall be allowed provided that line, grade, surface, smoothness and other requirements of the specifications are met. The equipment used shall be subject to the approval of a Professional Engineer licensed in the State of Indiana.

2. Expansion and contraction joints shall be installed as indicated on the drawings or as required by INDOT standards. Expansion joints shall be required whenever new concrete abuts fixed objects or existing concrete surfaces, whether or not shown on the drawings.

3. Keyway construction, load transfer devices, tie bars and slab and ear reinforcement shall be installed as indicated on the drawings.

4. Unless otherwise shown on the drawings, the final finish of concrete pavement shall be by brooming, as set out as Method 1 in INDOTSS Section 501.15 (d), to form a transverse skid-resistant finish.

5. The Contractor shall always have materials available to protect the surface of concrete against rain. These materials shall consist of burlap, curing paper or plastic sheeting.

6. New concrete pavement shall be protected by the Contractor until opening to traffic is approved by a Professional Engineer licensed in the State of Indiana. It shall not be opened to traffic until the field-cured concrete has attained a flexural strength of 550 psi, or a compressive strength of 3,500 psi. If such tests are not conducted, the pavement shall not be opened to traffic until 14 days after the concrete was placed. Before opening to traffic, the pavement shall be cleaned and permanent lane markings applied to the pavement.

3.8 WALKS

A. Walks shall consist of a coarse aggregate subbase and a reinforced concrete surface. Use No. 24 fine aggregate for subbase, unless otherwise shown. Concrete shall be Class "A", 4,000 psi concrete.

B. Subbase shall be 2 inches thick, and concrete shall be 4 inches thick, unless otherwise shown.

C. Compact subbase to not less than 95% of maximum dry density, as determined in accordance with AASHTO T99.

D. Proportion, mix, and place concrete as specified in INDOTSS Sections 604 and 702. Walks shall have a broom surface finish. Edge all outside edges of walk and all joints with a 1/4inch radius edging tool.

E. Unless otherwise shown on the drawings, walks shall be divided into sections not more than five feet in length by dummy joints formed by a jointing tool with a 1/4-inch radius.

F. Form construction joints around all abutting structures and appurtenances such as manhole, utility poles, hatches, and hydrants. Install 1/2inch thick pre-molded expansion joint filler in construction joints. Expansion joint material shall extend for the full depth of the walk.

G. If existing sidewalk is to be removed and replaced with new sidewalk or new sidewalk extended from existing sidewalk, the existing sidewalk shall be removed to the nearest joint of suitable quality or as directed by the Westfield Public Works Department.

3.9 CURBS

A. The construction of curbs, combination curb and gutter, and integral curb and gutter shall be in accordance with these specifications and as shown on the plans and shall be in reasonably close conformance with the lines and grades shown on the plans or as directed by a Professional Engineer licensed in the State of Indiana.

B. Excavation for curbs shall be made to the required depth, and the subgrade or base upon which the curb is constructed shall be compacted to a firm, even surface to not less than 95% of maximum dry density as determined in accordance with AASHTO T99.

C. Concrete for curbs shall be Class A, 4,000 psi, as specified previously for Concrete Pavement.

D. The curbs shall be constructed by the use of wood or metal forms; or, if approved by a Professional Engineer licensed in the State of Indiana, the curb may be constructed using a curb slipform machine. Forms, if used, shall be straight, free from warped or bent sections, and shall extend for the entire depth of the curb and shall be securely held in place so that no deviation from alignment and grade will occur during placement of concrete. The concrete shall be consolidated by vibration or other acceptable methods. The top of the curb shall be floated smooth and the top outer corner rounded to a 1/4inch radius.

E. The face, top, and gutter of curbs shall not have deviations or irregularities of more than 1/4inch when checked with a 10-foot straightedge.

F. Construction joints shall be placed at 10-foot intervals, unless otherwise shown or directed by a Professional Engineer licensed in the State of Indiana. The joint shall be uniform, of 1/8 to 1/4 inch in width, and to a depth of approximately 2-1/2 inches. The joint may be formed using concrete tools, saw cut or formed by approved removable strips providing a straight joint at right angles to the length of curb. Joints shall be filled with specified bituminous joint filler material. Constructing joints shall be formed around all abutting structures such as inlets and shall be as specified previously.

G. As soon as possible after placing and finishing of concrete, the curbing shall be moistened and kept moist for three days, or cured with the use of a specified membrane compound.

H. If existing curb is to be removed and replaced with new curb or new curb extended from existing curb, the existing curb shall be removed to the nearest joint of suitable existing curb or as directed by the Westfield Public Works Department.

I. During the placement of new concrete curb, utility marking shall be embossed into the top of the curb. The marking shall be a 2" high letter stamped into the concrete before the concrete sets up. The letters shall be located perpendicular from the utility feature that is being marked.

The letters shall be as follows:

G = Gas
C = Conduit
SS = Sewer Service Lateral
MH = Sanitary Manhole
W = Water
V = Water Valve
D = Subsurface Drain
S = Storm

3.10 LANE STRIPING

A. Lane striping is to be in accordance with all applicable standards of INDOTSS 808 and the construction plans.

B. Parking lots are to be striped with standard white road paint. Spaces to be striped shall be 10 feet 0 inches wide by 20 feet 0 inches long with 4 inch wide stripes.

C. Contractor will not permit traffic on any new pavement surface prior to striping.

D. Contractor will clean the new pavement surface to remove all dust, dirt, mud and debris prior to striping.

3.11 TESTING FOR HOT MIX ASPHALT (HMA)

A. At the discretion of the Westfield Public Works Department the Developer/Contractor shall employ and pay for the services of a competent independent testing laboratory to take cores at selected locations and perform described tests. Compaction requirements for HMA mixtures placed in accordance with INDOTSS Section 402 shall be controlled by in place density determined from cores cut from the compacted pavement. A minimum of two cores per section shall be cut for each course of each material or as directed by the Westfield Public Works Department. Sections are defined as a maximum of 1000 Mg (1041 ton) of HMA base or intermediate or 500 Mg (624 ton) of HMA surface. The transverse core location shall be located so that the edge of the core will be no closer than 75 mm (3 inches) from a confined edge or 150 mm (6 inches) from a non-confined edge of the course being placed.

B. For compaction of HMA mixtures with quantities less than 100 Mg (104 ton) per day, acceptance may be visual as determined by the Engineer.

C. The Contractor along with their independent testing lab representative shall obtain cores in the presence of the Westfield Public Works Department with a device that shall produce a uniform 150 mm (6 inches) in diameter pavement sample. Each HMA course shall be cored within one workday of placement. Damaged core(s) shall be discarded and replaced with a core from a nearby location as selected by the Engineer.

D. The Contractor, in the presence of the Westfield Public Works Department, shall mark the core to define the course to be tested. If the defined area is less than 1.5 times the maximum particle size, the core will be discarded and a core from a new random location will be selected for testing as determined by the Engineer. Within one work day of coring operations the Contractor shall clean, dry, refill and compact the core holes with suitable material approved by the Engineer.

E. The Contractor's testing lab representative shall take immediate possession of the cores. If the cores are subsequently damaged, additional coring within the specific section(s) will be required at locations to be determined by the Westfield Public Works Department.

F. Each core shall be tested within one work day of coring operation to determine thickness, bulk specific gravity, aggregate gradation and binder content. Test results shall then be transmitted either verbally or by other means to both the Contractor and the Westfield Public Works Department for verification before each subsequent bituminous lift is placed.

1. Average thickness of the cores shall not vary from the plan thickness more than 12.5 mm (0.5 inch) for HMA base and intermediate course(s) and 6.25mm (0.25 inch) for HMA surface course(s) for acceptance in accordance with INDOTSS section 105.03.

2. The bulk specific gravity shall be determined in accordance with AASHTO T166 or AASHTO T 275. The in place density of a section for a mixture shall be expressed as:

Density % = (BSG/MSG) * 100

Where: BSG = bulk specific gravity as determined from independent testing laboratory

MSG = maximum specific gravity as reported on job mix formula.

3. The calculated density of the cores shall not be less than 90% nor more than 96% a set out above. Test results which are outside stated limits shall be considered and adjudicated as a failed material in accordance with INDOTSS Section 105.03.

G. The Contractor's independent testing laboratory representative shall determine the aggregate gradation and binder content of the core samples in accordance with ITM 571. Aggregate gradation shall be within tolerances set forth in INDOTSS Section 402.04 and binder content shall be within A±0.5 percent from the job mix formula. Test results which are outside the stated limits shall be considered and adjudicated as a failed material in accordance with INDOTSS Section 105.03.

H. A copy of all core test results shall be submitted to the Engineer for verification of specification compliance within one calendar week of core testing.

I. The Contractor shall make the following tests at their cost and they shall be as specified in this Article and requested by the Engineer. Perform tests in accordance with the following

ASTM Specifications:

Test ASTM Specification
Slump C143 Air Content C173 Test Cylinders C31 or C513 Core Samples C42 Fly Ash C311

1. Measure slump each time test beams or cylinders are to be made and at any other time requested by the Westfield Public Works Department. The slump shall be as specified in INDOTSS Section 501.03, or as otherwise specified herein, unless specifically excepted by the Westfield Public Works Department.

2. Measure air content each time test beams or cylinders are to be made and at any other time requested by the Westfield Public Works Department. The field test may be omitted if the air content is known prior to taking samples. The field test may not be omitted if fly ash is used in the mix.

1. Concrete paving mixes shall comply with guidelines of INDOTSS Section 501.03 and shall meet the testing requirements of Section 501.03 (a). However, in lieu of forming test beams as described in Section 501.03 (a)

2. The Contractor may substitute cylinder tests as follows:

1. Make test cylinders in sets of four. Field cure one cylinder and break at seven days. Laboratory cure the remaining three cylinders and break at 28 days. The Contractor shall be responsible for handling and transportation of cylinders.

2. If fly ash is used in the mix, a total set of seven cylinders shall be taken. The additional three cylinders shall be laboratory cured and broken at 56 days, if the 28-day strength does not meet specifications.

3. Make one set of test cylinders for each 100 cubic yards, or fraction of 100 cubic yards, of concrete placed; or at other times requested by the Westfield Public Works Department.

4. Unless otherwise specified, concrete shall have a 28-day compressive strength of 4,000 psi, as demonstrated by laboratory tests of cylinders.

3.12 PROTECTION

A. Maintain compacted aggregate subbase and surface true to line and grade and required density. Maintain subbase until prime coat is placed. Maintain surface until job is com

B. Do not permit vehicular traffic of any kind on any bituminous course until the bituminous mixture has hardened sufficiently not to be distorted beyond specified tolerances. Remove any foreign material which is on the surface of any course before the course is rolled or any subsequent course is placed.

C. Do not permit traffic on concrete pavement or walks until concrete has developed sufficient strength not to be marked or damaged. Do not permit vehicular traffic on concrete for at least 14 days.

D. Repair or replace damaged pavement and walks to the satisfaction of the Westfield Public Works Department Director or designee.

3.13 CLEANUP

Clean up the job site following pavement and surfacing restoration. Remove all rubbish, excess materials, temporary structures, and equipment. Leave the work in a neat and presentable condition.

PART 4 - FIGURES

4.1 STANDARD PAVEMENT DETAILS

FIGURE DESCRIPTION
P-3.1 Typical Pavement Sections
P-3.2 Typical Pavement Sections
P-3.3 Typical Pavement Sections
P-5 Joint Detail
P-6 Structure Details
P-7 Joint Location
P-8 Concrete Curb and Gutter Type I & II
P-9 Pipe Underdrain
P-10 Sidewalk Details
P-11 Sidewalk for Handicapped
P-12 Subdivision Cul-de-sac
P-13 Subdivision Temporary Cul-de-sac
P-14 Standard Barricade
P-15 Street Signs Detail
P-15.1 Typical Subdivision Regulatory Signs
P-16 Bicycle/Jogging Path
P-17 Typical Driveway Section
P-18 Repair of Cuts within Pavement Limits
P-21 Raised Pavement Marker Cast Metal Base, Type 1
P-21.1 Raised Pavement Marker Cast Metal Base, Type 2
END OF SECTION 02500

REVISIONS:

DAVID A CLARK
REGISTERED
No. 19300219
STATE OF INDIANA
PROFESSIONAL ENGINEER

DATE: 06/27/08

THIS DRAWING AND THE IDEAS, DESIGNS AND CONCEPTS CONTAINED HEREIN ARE THE EXCLUSIVE INTELLECTUAL PROPERTY OF THE SCHNEIDER CORPORATION, AND ARE NOT TO BE USED OR REPRODUCED, IN WHOLE OR IN PART, WITHOUT THE WRITTEN CONSENT OF THE SCHNEIDER CORPORATION.
© COPYRIGHTED BY THE SCHNEIDER CORP.(2008)

Schneider
THE SCHNEIDER CORPORATION
Historic Fort Harrison
8901 Otis Avenue
Indianapolis, IN 46216-1037
Telephone: 317.826.7100
Fax: 317.826.7300
www.schneidercorp.com

Architecture
Civil Engineering
Environmental Engineering
Geotechnical Services
GIS * LIS
Home Builder Services
Interior Design
Land Surveying
Landscape Architecture
Transportation Engineering

CENTENNIAL SOUTH EXPANSION
WESTFIELD, INDIANA

ESTRIDGE DEVELOPMENT CO., INC.
CARMEL, INDIANA

DATE: 06/27/08	PROJECT NO.: 3915.004
DRAWN BY: PCJ	CHECKED BY: JLF

SHEET TITLE:
PAVING & SURFACING SPECIFIC. FOR THE TOWN OF WESTFIELD

DRAWING FILES:
R:\3K\3915\004\DWGS\C901-C905

SHEET NO.:
C903

R:\3K\3915\004\dwgs\C901-C905.dwg, 6/30/2008 11:2:15 PM, KIP 7204.pc3

SECTION 02731 - GRAVITY SANITARY SEWERS

PART 1 - GENERAL

1.1 GENERAL

A. This section covers all work necessary for the installation of gravity sanitary sewers and related items complete, including manholes, junction chambers, diversion chambers, house services, and miscellaneous concrete structures.

B. Sewer pipe shall be the size shown on the drawings and shall meet all requirements of these specifications.

C. If a material type is shown on the drawings, that material shall be used in the installation unless otherwise noted in the specifications.

1.2 PIPE MARKING

Each length of pipe shall bear the name or trademark of the manufacturer, the location of the plant, and the date of manufacture. Each length shall likewise be marked to designate the class or strength of the pipe. The marking shall be made on the exterior or interior of the pipe barrel near the bell or groove end and shall be plainly visible.

1.3 SUBMITTALS

Before construction and preferably before fabrication, the Contractor shall submit to the Westfield Public Works Department for approval calculations on the thickness or strength class and drawings showing pipe lengths, joints, and other construction and installation details. All pipe furnished shall be fabricated only in accordance with the drawings and these specifications.

1.4 QUALITY ASSURANCE

A. Performance Tests: The Contractor shall test all gravity sewers constructed. The Contractor shall constantly check horizontal and vertical alignment. Testing for vertical deflection in the case of non-rigid pipe and sewer watertightness testing in the case of all gravity sewers and hydrostatic testing of ductile iron pipe shall be as specified in this Section.

B. Line and Grade Requirements: The Contractor shall provide assurance to the Westfield Public Works Department's representative that the sewer is laid accurately to the required line and grade as shown on the drawings. The Contractor shall utilize a laser beam instrument to lay and check the alignment and grade between manholes. Before proceeding with the next section of sewer, the last section shall be checked for proper line and grade. Variations from a uniform line and grade as shown on the drawings and described below shall be cause for the line to be rejected.

1. Variance from established line and grade shall not be greater than 1/32 of an inch per inch of pipe diameter and not to exceed 1/2 inch, provided that such variation does not result in a level or reverse sloping invert; provided also that the variation in the invert elevation between adjoining ends of pipe, due to non-concentricity of joining surface and pipe interior surfaces, does not exceed 1/64 inch per inch of pipe diameter or 1/2 inch maximum.

C. Test Sections

1. Initial Performance Test: An initial performance and leakage test will be performed on the first sections of sanitary sewer constructed of approximately 600 feet in length of each size and type sewer material installed. No additional sewer pipe shall be installed until the first section of sewer of each size and type of sewer material has satisfactorily passed the test for line and grade and the leakage test.

2. Subsequent Performance Testing: After the initial performance test and leakage test and as work progresses, the Westfield Public Works Department or designee may designate additional sections for testing as conditions in his opinion warrant. If a review of the Contractor's workmanship leads the Westfield Public Works Department or designee to question whether or not the tolerances and standards specified are being met, the Westfield Public Works Department or designee, reserves the right to select other locations and lengths to be tested. The Westfield Public Works Department or designee shall notify the Contractor of the location where a test is to be required not later than 15 days after the sewer installation has been completed. Unless otherwise authorized, the Contractor shall arrange to commence the test within 15 days after the sewer has been installed or 15 days after receiving notification by the Westfield Public Works Department, whichever date is later.

3. Final Performance Testing for Acceptance: Before acceptance for all new sanitary sewers, the Contractor and the Westfield Public Works Department or designee shall check all sewers, even if previously checked, for accurate alignment and grade. Also, all sanitary sewers shall be tested as specified in Articles 3.10 through 3.14 of this Section for watertightness. The program of testing whether by infiltration, exfiltration, air testing, or vacuum testing shall be determined by the Westfield Public Works Department.

1.5 LENGTH OF OPEN TRENCH

Except by permission of the Westfield Public Works Department not more than 450 feet of trench shall be opened at any one time. Not more than 30 feet of trench may be opened in advance of the completed pipe laying operation, and not more than one street crossing may be obstructed by the same trench at any one time.

1.6 RELATION TO WATER MAINS

A. Sewers must be laid at least 10 feet horizontally from any existing or proposed water main. The distance is to be measured edge to edge. Should specific conditions prevent this separation, the Contractor shall notify the Westfield Public Works Department for specific instructions regarding the treatment of the separation. Special conditions may allow installation of the sewer closer to a water main, provided that the water main is in a separate trench or on an undisturbed earth shelf located on one side of the sewer and at an elevation so the bottom of the water main is at least 18 inches above the top of the sewer. It may be necessary to install 150 psi water main pipe and joints as sewer pipe for the congested areas.

B. Whenever the sewer crosses a water main, it should be laid at least 18 inches below the main, or the water main should be relaid with fittings to cross over the sewer. The crossing shall be arranged so that the sewer joints will be equidistant and as far as possible from the water main joints.

C. When it is impossible to obtain proper horizontal and vertical separation as stipulated above, the sewer shall be designed and constructed equal to water pipe, and shall be pressure tested to assure watertightness prior to backfilling. Maximum distance between sewer pipe joints and water pipe shall be provided where vertical separation is a problem.

PART 2 - PRODUCTS

2.1 MATERIALS

A. Sewers 15 Inches or Smaller

1. Sewers 15 inches in diameter or smaller shall be PVC composite pipe, polyvinyl chloride pipe or ductile iron pipe.

2. PVC Composite Sewer Pipe and Fittings: PVC composite sewer pipe and fittings shall conform to ASTM D2680, latest revision.

3. Polyvinyl Chloride Pipe and Fittings

a. Polyvinyl chloride pipe and fittings shall conform to ASTM D3034 SDR 35, Type PSM, latest revision.

4. Ductile Iron Pipe and Fittings: Ductile iron pipe and fittings shall conform to the requirements of ANSI/ASTM A746, Ductile Iron Gravity Sewer Pipe.

a. Thickness class requirements of ductile iron pipe to be used in conveyance of sanitary sewage by gravity shall be minimum thickness of Class 350 unless otherwise noted for standard length pipe.

b. Outside surfaces of the pipe and fittings shall be bituminous coated complying with ANSI/AWWA A21.51/C151 and ANSI/AWWA A2110/C110.

c. Inside surfaces of all pipe, fittings and adapters shall be lined with cement mortar and a bituminous seal coat. Cement mortar lining and bituminous seal coat shall meet the requirements of ANSI/AWWA A21.4/C104.

d. Ductile iron pipe and fittings shall be push-on type conforming to ANSI A21.11 (AWWA C111), latest revision. Fittings shall be ductile iron and shall comply with ANSI Specification A21.10, latest revision, with mechanical joints for 150 psi working pressure.

5. Joints for PVC Sewer Pipe

a. Joints on PVC sewer pipe shall be the integral bell type gasketed joint designed so that when assembled the elastomeric gasket inside the bell is compressed radially on the pipe spigot to form a positive seal. The joint shall be so designed to avoid displacement of the gasket when installed in accordance with manufacturer's recommendations. The joint shall comply with the physical requirements of ASTM D3212, and the gasket shall be the only element depended upon to make the joint flexible and watertight.

b. All PVC Pipe entering a manhole shall have a manhole waterstop gasket as supplied by the manufacturer firmly clamped around the pipe at the manhole. If flexible entry type manhole system is used, the waterstop gasket is not required.

B. Fittings

1. Fittings such as wyes and bends shall be made in such a manner as will provide strength and watertightness at least equal to the class of the adjacent main line pipe to which they are jointed and shall conform to all other requirements specified for pipe of corresponding class and internal diameter. Joints shall be of the same type as used on the adjoining pipe.

2. Fabricated branches for wyes and tees shall be securely attached to the wall of the pipe in a watertight manner and shall be flush with the inside surface of the pipe. The branches shall have their axes perpendicular to the longitudinal axis of the pipe. Wye branches shall have their axes approximately 60 degrees for clay pipe and 45 degrees for concrete pipe from the longitudinal axis of the pipe, measured from the bell end. Pipe reinforcement shall not be interrupted beyond a radial distance of 3 inchesoutside of the fitting.

C. Manholes and Other Structures: Manholes shall be constructed of monolithic concrete or precast manhole sections. Precast manhole sections shall conform to requirements of ASTM Specification C478, latest revision.

1. Materials for manholes, junction chambers, diversion chambers, and miscellaneous concrete structures shall comply with the following:

a. Concrete for precast manhole sections shall be 3000 psi concrete. Monolithic manholes shall use 4000 psi concrete. Ready-mix concrete shall conform to ASTM C94 Alternate 2. Maximum size of aggregate shall be 1-1/2 inches. Slump shall be between 2 and 4 inches.

b. Forms for chamber and structures shall be plywood or other approved material. Steel forms shall be used for the inside face of monolithic concrete manholes.

c. Reinforcing steel shall conform to ASTM A615, Grade 40 deformed bars, or ASTM A616, Grade 40 deformed bars.

d. Mortar Materials

(1)Sand - ASTM Designation C144, passing a No. 8 sieve.
(2)Cement - ASTM Designation C150, Type 1.
(3) Water - shall be potable.

e. All joints shall be fully sealed and waterproofed. Rubber gaskets for precast concrete manhole sections shall meet the requirements of ASTM C443. The gasket shall be the sole element depended upon to make the joint flexible and watertight.

f. The manufacturer of the precast manholes shall provide core-drilled openings to produce a smooth, uniform, cylindrical hole of the proper size to accommodate a resilient connector meeting the requirements of ASTM C 923 for all sewers entering and leaving the manhole. The resilient connectors shall be either Press-Seal Gasket Corp., which provides PSX gasket or Press Wedge II; or similar flexible manhole sleeves furnished by Kor-N-Seal by NPG Systems, Inc.; or equal.

g. Precast manhole sections shall be steam cured and shall not be shipped from the point of manufacture for at least five days after having been cast. The exterior surface of each section shall be thoroughly coated with a coal tar epoxy type coating as manufactured by TNEMEC Co, Tnemec46H413 Hi-Build Tneme-Tar; or approved equal by the Engineer. Final dry mils thickness shall be a minimum of 12 mils. Monolithic concrete manholes and other concrete structures shall be cured for a minimum of seven days and then coated in the field with a coal tar epoxy type coating as mentioned above.

h. Manhole castings shall be of good quality cast iron and/or ductile iron, conforming to ASTM Designation A48. Castings shall have a total weight of not less than 335 pounds and shall conform to the design of the manhole casting as shown on the standard detail sheet. Castings shall have three bolt holes equally spaced around base of frame and shall be securely anchored to cone section to provide a water tight-fit with three 3/8-inch stainless steel bolts and expansion shields. Unless specifically designated otherwise, manhole castings shall be the non-locking type.

i. Manhole steps shall be made from a steel reinforcing rod encapsulated in a copolymer polypropylene resin. The manhole steps shall equal or exceed OSHA requirements. Manhole steps manufactured by M. A. Industries, Inc., PS-I-PF, Clay & Bailey Mfg. Co., or equal, are acceptable.

j. Any other special manholes, junction chambers, diversion chambers, and miscellaneous concrete structures shall be constructed as detailed on the drawings.

k. The Contractor may, at his option, furnish and install a combination precast concrete base and first section with precut openings for services. Detailed drawings shall be submitted to the Westfield Public Works Department prior to manufacture.

l. Precast manhole sections shall have a lifting eye cast into the wall for lifting the section. Lifting holes through the precast section will not be allowed.

D. Grease Trap: Grease trap tank shall be constructed of 6000 psi concrete. All tank joints shall be sealed watertight with butyl rubber extrudible preformed gasket material. All outside riser ring surfaces shall be waterproofed 1/8" with trowelable grade butyl rubber back plaster.

PART 3 - EXECUTION

3.1 INSPECTION AND REJECTION OF PIPE

A. The quality of all materials, the process of manufacture, and the finished pipe shall be subject to inspection and approval by the Westfield Public Works Department. Such inspection may be made at the place of manufacture or on the work after delivery, or at both places; and the pipe shall be subject to rejection at any time on account of failure to meet any of the specifications' requirements even though sample pipes may have been accepted as satisfactory at the place of manufacture.

B. Prior to being lowered into the trench, each pipe shall be carefully inspected, and those not meeting the specifications shall be rejected and at once removed from the work.

C. The Westfield Public Works Department or designee shall have the right to cut cores from such pieces of the concrete pipe as he desires for such inspection and test as he may wish to apply. The cost to cut the cores and administer appropriate test shall be paid by the developer.

D. Holes left by the removal of cores shall be filled in an approved manner by and at the expense of the manufacturer of the pipe.

E. The Westfield Public Works Department or designee shall also have the right to take samples of concrete after it has been mixed, or as it is being placed in the forms or molds, and to make such inspection and tests thereof as he may wish. The cost to administer appropriate test shall be paid by the developer.

F. Any pipe which has been damaged after delivery will be rejected and replaced solely at the Contractor's expense.

3.2 HANDLING PIPE

Each pipe section shall be handled into its position in the trench only in such manner and by such means as the Westfield Public Works Department or designee approves as satisfactory. As far as practicable, the Contractor will be required to furnish slings, straps, and other approved devices to permit satisfactory support of all parts of the pipe when it is lifted.

3.3 NOTICE TO WESTFIELD PUBLIC WORKS DEPARTMENT

The Westfield Public Works Department or designee shall be notified when the pipes are to be laid in the trench. At least 15 feet of the pipe shall, under ordinary circumstances, be laid before covering begins.

3.4 LAYING PIPE

A. All pipe shall be reinspected for soundness and damage due to handling immediately before being lowered into the trench. Any pipe found to be unsound or damaged will be rejected and shall be removed immediately from the site of the work.

B. All pipe shall be laid accurately to the required line and grade as shown on the drawings, and in the manner prescribed by the pipe manufacturer and appropriate ASTM Specifications, to form a close, concentric joint with the adjoining pipe and to bring the invert of each section to the required grade. The supporting of pipe on block will not be permitted.

C. Pipe laying shall proceed upgrade, beginning at the lower end of the sewer.

D. All sewers shall be designed and constructed to give mean velocities, when flowing full, of not less than 2.0 feet per second (0.6 m/s), based on Manning's formula using an "n" value of 0.013. The following are the recommended minimum slopes which should be provided; however, slopes greater than these are desirable.

Nominal Sewer Size Minimum Slope in Feet Per 100 Feet (m/100m)

8 inch (200 mm) 0.40
10 inch (250 mm) 0.28
12 inch (300 mm) 0.22
14 inch (350 mm) 0.17
15 inch (375 mm) 0.15
16 inch (400 mm) 0.14
18 inch (450 mm) 0.12
21 inch (525 mm) 0.10

Nominal Sewer Size Minimum Slope in Feet Per 100 Feet (m/100m)

24 inch (600 mm) 0.08
27 inch (675 mm) 0.067
30 inch (750 mm) 0.058
33 inch (825 mm) 0.052
36 inch (900 mm) 0.046
39 inch (975 mm) 0.041
42 inch (1050 mm) 0.037

E. Practically watertight work is required, and the Contractor shall construct the sewers with the type of joint specified.

F. All pipe shall be laid to the line and grade as shown on the drawings. Variations from a uniform line and grade as shown on the drawings shall be cause for the line to be rejected.

G. The ends of the pipe shall be satisfactorily cleaned just before laying, and the joint shall be made in a satisfactory manner in accordance with the recommendations of the manufacturer on particular type of joint. All joint work shall be done by experienced workmen.

H. PVC (polyvinyl chloride) gravity sewer pipe and fittings, ASTM Designation D3034 SDR 35, shall be installed in accordance with the directions contained in ASTM Designation D2321. Only materials classified as Class I will be acceptable for bedding, haunching, and initial backfill of the pipe placed and compacted in accordance with ASTM D2321.

I. Joints on PVC pipe shall be the integral bell type gasketed joint designed so that when assembled the elastomeric gasket inside the bell is compressed radially on the pipe spigot to form a positive seal. The joint shall be so designed to avoid displacement of the gasket when installed in accordance with the manufacturer's recommendations. The gasket shall be the only element depended upon to make the joint flexible and watertight.

J. All PVC pipe entering a manhole shall have manhole waterstop gasket as supplied by the manufacturer firmly clamped around the pipe. If flexible entry type manhole system is used, the waterstop gasket is not required.

K. All PVC pipe shall have a deflection test performed by the Contractor in the presence of the Westfield Public Works Department or designee.

L. All pipe shall be bedded as described in this specification under Pipe Bedding. Bell holes shall be excavated in advance of pipe laying so the entire pipe barrel will bear uniformly on the prepared subgrade.

M. Each length of pipe shall be mechanically pulled "home" with a winch or come-along against the section previously laid and held in place until the trench and bedding are prepared for the next pipe section. Care shall be taken in laying the pipe so not to damage the bell end of the pipe. Mechanical means consisting of a cable placed inside the pipe with a winch, jack, or come-along shall be considered to pull the pipe home where pushing the pipe will not result in a joint going completely home and staying in place. Pushing the pipe home shall be done by means of a block and push bar. Use of hydraulic excavating equipment as the means of pushing or moving the pipe to grade will not be permitted.

N. The Contractor shall use laser beam equipment to maintain accurate alignment and grade. A qualified operator shall handle the equipment during the course of construction. If bending of the laser beam due to air temperature variations or dust in the air is apparent "within the pipe" units, a fan shall be provided to circulate the air. However, air velocity shall not be so excessive as to cause pulsating or vibrating of the beam. Survey instruments may be used for checking alignment and grade if questions arise about the accuracy of the work.

O. Open excavation shall be satisfactorily protected at all times. At the end of each day's work, the open ends of all pipes shall be protected against the entrance of animals, earth, or debris by bulkheads or stoppers. The bulkheads or stoppers shall be perforated to allow passage of water into the installed pipe line to prevent flotation of the pipe line. Any earth or other material that may find entrance into the main sewer or into any lateral sewer through any such open end of unplugged branch must be removed at the Contractor's expense.

P. The Contractor shall conduct a leakage test as described in SewerTests of the specification on the first section of sewer of each size and type sewer material installed. No additional sewer pipe shall be installed until the first reach of sewer of each size and each type sewer material has satisfactorily passed the leakage test.

Q. The Contractor shall prevent all ground water and surface water from entering the existing sewer system during construction of a new sewer or force main extension.

R. Sanitary sewer designs that require crossing a county legal drain shall be approved and constructed per the latest standards of the Hamilton County Surveyor's Office.

3.5 PIPE BEDDING AND HAUNCHING

A. Each pipe section shall be laid in a firm foundation of bedding material and haunched and backfilled with care.

B. Prior to pipe installation, carefully bring bedding material to grade along the entire length of pipe to be installed. To provide adequate support for the pipe, the following bedding procedures are recommended.

1. When Class I material is used for bedding, little or no compaction is necessary due to the nature of the angular particles. A depth of 4 to 6 inches is generally sufficient to provide uniform bedding.

C. Bedding material shall have a minimum thickness beneath the pipe of 4 inches (100 mm) or one-eighth of the outside diameter of the pipe, whichever is greater, and shall extend up the sides of the pipe one-sixth of the outside diameter of the pipe.

D. For rigid pipe, such as concrete or ductile iron, backfill between the bedding material and a plane 12 inches (300 mm) over the top of the pipe shall be hand-placed finely divided earth, free from debris and stones, or granular backfill if required.

E. For flexible pipe such as PVC, the placement of embedment material, consisting of bedding, haunching, and initial backfill, must be done with care. The ability of the pipe to withstand loading in a trench depends a large part on the method employed in its installation. Class I material, as defined in specification Section 02222, Article 2.01, paragraph A, shall be used as embedment material for flexible pipe. Bedding thickness shall be as specified in paragraph C of this Section. The haunching material (the material from the bedding to the pipe springline) and initial backfill (the material from the pipe springline to a plane 12-inches over the top of pipe), shall be hand placed. Care must be taken to not cause damage by compacting the material directly over the pipe.

F. In yielding subsoils, the trench bottom shall be undercut to the depth necessary and backfilled with graded, crushed stone to form a firm foundation. No additional payment shall be made for stabilizing yielding subsoils.

G. Where excavation occurs in rock or hard shale, the trench bottom shall be undercut and a minimum of 6 inches (150 mm) crushed stone bedding placed prior to pipe installation. Additional payment for rock excavation shall be made on "unit cost" projects only, and as prescribed under basis for payment.

3.6 MANHOLES AND OTHER STRUCTURES

A. Manholes and other structures are to be constructed at locations shown on the drawings and in accordance with the following specifications:

1. Precast concrete manhole sections shall conform to ASTM Designation C478, except as modified herein:

a. The joint design of the precast sections shall consist of a bell or groove on one end of the unit of pipe and a spigot or tongue on the adjacent end of the joining section.

b. The joint shall consist of a round rubber gasket confined in a groove in the spigot end of the precast manhole section and shall conform to Sections 6.1.6, 6.1.7 and 9 of ASTM Designation C443, latest revision and a 6 inch wide flexible butyl rubber joint sealant between the outside joints. Inside manhole joints are to be sealed with hydroplug or non-shrink grout and brushed smooth.

1. Openings in manhole sections for sewer connections shall be core-drilled at the point of manufacture and shall be done to produce a smooth, uniform, cylindrical hole of proper size to accommodate a resilient connector meeting requirements of ASTM C 923. The resilient connectors shall be either Press-Seal Gasket Corp., PSX Gasket or Press-Wedge II; or similar flexible manhole sleeves furnished by Kor-N-Seal by NPC Systems, Inc.; or equal.

2. Manhole bases shall be cast-in-place concrete, reinforced as shown on the Standard Detail Sheet, or monolithic base and first section combination. Manhole bases shall be cast or placed on a minimum of 6 inches of compacted crushed stone.

3. Manhole channels or inverts shall be preformed and poured with Class "B" concrete to the spring line of the connecting pipe. The finished invert shall be a semi-circular shaped smooth channel directing the flow to the downstream sewer.

4. Monolithic concrete manholes, junction chambers, and other cast-in-place concrete structures shall be cured for a minimum of seven days. The exterior surfaces shall then be coated thoroughly with a coal tar epoxy type coating as manufactured by TNEMEC Co., Tneme-46H413 Hi-Build Tneme-Tar; or approved equal by the Westfield Public Works Department. Coating shall be 12 mil minimum dry film thickness. Each joint of precast concrete manhole sections, lifting holes, and holes left by the removal of cores shall be fully mortared and shall be coated with a 12 mil minimum dry film thickness of coal tar epoxy as specified upon reaching its final set.

5. Any additional holes cut in the field shall be drilled with a core-drill or in a manner approved by the Westfield Public Works Department or designee.

6. Manhole frames and lids shall weigh not less than 335 pounds and be of good quality cast iron, conforming to ADTM Designation A48. Unless specifically designated otherwise, manhole castings shall be the non-locking type. All manhole frames shall be cast or drilled with be cast or drilled with three holes equally spaced around base of frame and shall be securely anchored to cone section with three 3/8-inch stainless steel bolts, nuts, and washers. The joint between the casting frame and cone section shall be first sealed with cement mortar and then coated with a pliable butyl rubber or a coal tar epoxy coating upon reaching its final set to become a watertight joint.

7. Manhole steps shall be made form a steel reinforcing rod encapsulated in a copolymer polypropylene resin. Steps shall be placed as shown on the approved drawings.

3.7 HOUSE/BUILDING SERVICES

A. The Contractor shall install 6-inch diameter house/building service sewer shall be installed as shown on the Standard Detail Sheet. The house/building service shall extend from a "wye" or "tee" fitting in the main sewer line to the property line or easement line, unless stated otherwise.

B. The backwater prevention valve shall be located on the inside of basements or crawl spaces and readily accessible at all times. The backwater prevention valve for buildings located on slabs shall be installed on the building side of the clean out.

C. The Contractor shall contact the individual property owners for the preferred location of the house/building service to best suit the property owner's needs. If the Contractor is unable to contact the property owner in advance of laying the main sewer by or across the property, the Contractor shall so notify the Westfield Public Works Department or designee in writing.

D. Fittings for house/building service connections on a main line sewer 15 inches in diameter or smaller shall be tees or 45-degree wyes and shall be of the same material as the main line sewer, unless otherwise approved by the Westfield Public Works Department.

E. House/building services and connections on main line sewers greater than 15 inches in diameter shall be of a type that will maintain the structural integrity of the main line sewer and provide a watertight connection. Intrusion of house/building services into the flow way of the main line sewer should not be permitted.

F. Six-inch lateral pipe shall connect to the main line sewer at an angle of 15 degrees to 45 degrees from the spring line and shall include the necessary bends and straight pipe sections to reach the property line at the elevations specified. A pipe stopper or a bell cap shall be placed on/in the last bell. This stopper or bell cap should be compatible with the type of infiltration/exfiltration test performed on the sewer.

G. The Contractor shall furnish and use the proper fittings, couplings, and adapters suited to make the transition between different pipe materials which will maintain the structural integrity and the watertightness of the entire sewer system.

H. At the discretion of the Westfield Public Works Department, when and where improper installation practices are suspected, or questionable bedding materials and methods are employed, or where the installations are severe, the Contractor will have to perform deflection testing on the 6inch house laterals as specified in Article 3.9.

I. Backfill around fittings and lateral pipe shall be carefully placed and compacted to prevent damage from backfill settlement and shall be installed in same manner as described for sewer installation.

J. The Contractor shall keep accurate horizontal and vertical location measurements of each house/building service installed. The location of all house/building services shall be shown on record drawings as noted in Section 1.17 Record Drawings. The accuracy of the measurements shall be the Contractor's responsibility.

3.8 STUBS, CONNECTIONS, BULKHEADS, AND MISCELLANEOUS ITEMS OF WORK

A. Where special junction chambers are to be constructed or where existing sewers carrying sanitary sewage are encountered, the Contractor shall provide and maintain temporary connections to prevent a nuisance.

B. Where called for shop connections and stubs for future sewer connections shall be provided.

C. New sewer connections to existing manholes shall be neatly made by cutting a hole in the existing structure, concreting the sewer in place, and providing a watertight connection.

D. The Contractor shall not connect any existing sewers or house/building services prior to the completion of the exfiltration/infiltration tests, air tests, and acceptance of the sewer without the permission of the Westfield Public Works Department.

3.9 VERTICAL DEFLECTION TESTING

For PVC pipe, the entire length of installed mainline pipe shall be tested for acceptance with an approved go-no-go mandrel under the observation of the Engineer. The testing shall be conducted after the final backfill has been in place for at least 30 days. No pipe shall exceed a deflection of 5%. The deflection test shall be run using a mandrel having a diameter equal to 95% of the inside diameter of the pipe in accordance with ASTM D-3034 Appendixes. The pipe shall be measured in compliance with ASTM D-2122. All pipe exceeding the allowable deflection shall be replaced, repaired, and retested.

3.10 INFILTRATION LIMITS

A. Maximum infiltration/exfiltration limits for all new sanitary sewers shall not exceed 200 gallons per inch of diameter per mile of pipe per 24 hours for any section of the system. All sections of the sewer shall be tested, and any sections not meeting this infiltration standard shall be repaired and retested.

B. The Contractor shall note the special provision under Article 3.04, paragraph 0., that the first section of sewer of each size and type of sewer shall be given a satisfactory leakage test before proceeding with any additional construction.

3.11 SEWER WATERTIGHTNESS TESTING

A. Tests for watertightness shall be conducted on all installed sewers in the presence of and in the manner accepted by the Westfield Public Works Department or designee. The Contractor shall furnish and install all equipment necessary for the sewer tests.

B. Watertightness tests shall be conducted on short sections of the sewer as soon as the manholes have been constructed and the backfilling completed.

C. Where the section tested is in excess of the allowable limits, the Contractor shall correct the construction of the sewer so that the section tested is within the allowable limit. All methods and materials used in the repair shall be approved by the Westfield Public Works Department or designee.

D. The program of testing shall fit the conditions as determined by the Westfield Public Works Department or designee using Air Test for Leakage. When ductile iron pipe with push-on type joints are used for sewer construction, a hydrostatic pressure test shall be performed.

1. The Air Test for Leakage

a. The air test for leakage shall be used to test sewer watertightness on all sewer pipe unless otherwise noted.

b. The ends of the sewer section being tested shall be sealed and properly blocked. The seal at one end shall have an orifice through which to pass air into the pipe. An air supply shall be connected to the orifice at one end of the section. The air supply line will contain an off-on gas valve and a pressure gauge having a range from 0 to 25 psi. The gauge shall have minimum divisions of 0.10 psi and shall have an accuracy of the nearest ±0.1 psi. The seals at each manhole shall be properly blocked to prevent displacement while the line is under pressure.

2. Procedure for Conducting a Low Pressure Air Test

a. Clean pipe to be tested by propelling a snug fitting inflated ball through the pipe by water pressure or other adequate method. This step is important because it not only flushes out construction debris, but the water used to flush the ball through the pipe dampens the pipe wall. The rate of air loss through pipe wall permeation can be significant on dry pipes.

b. Plug all pipe outlets with pneumatic plugs having a sealing length equal to or greater than the diameter of the pipe to be tested. The pneumatic plug shall be able to resist internal testing pressures without requiring external bracing.

c. The groundwater level surrounding the section of sewer under testing shall be determined by one of the procedures previously outlined in paragraph D(1). If the groundwater table is above the pipe, then test pressures shall be increased by the corresponding increment (e.g., if the groundwater table is above the lowest crown of the pipe, the air pressure should be increased 0.43 times each foot of water.)

d. Once the pipe outlet plugs are securely in place, pressurized air is introduced to the system. The air shall be fed through a single control panel with three individual hose connections as follows:

(1) from control panel to pneumatic plugs for inflation in sewer pipe; from control panel to sealed line for introducing the pressurized air; from sealed line to control panel. This line will enable continuous monitoring of the air pressure rise in the sealed line.

e. The air shall be introduced slowly to the section of pipe under evaluation until the internal air pressure is raised to 4.0 psig greater than the hydrostatic pressure head created by the existence of groundwater that is over the pipe section.

f. A minimum of two minutes shall be provided for the air pressure to stabilize to conditions within the pipe. (This stabilization period is necessary for variations in temperature to adjust to the interior pipe conditions.) Air may be added slowly to maintain a pressure to 3.5 to 4.0 psig for at least two minutes.

g. After the stabilization period, when the pressure reaches exactly 3.5 psig, the stopwatch shall be started; and when the pressure reaches 2.5 psig, it is stopped. The portion of the line being tested shall be acceptable if the time in minutes for the air pressure to decrease from 3.5 psig to 2.5 psig is greater than the time shown in the following table:

Pipe Diameter (Inches)	Time (Minutes)
4	2.0
6	3.0
8	4.0
10	5.0
12	5.5
15	7.5
18	8.5
21	10.0
24	11.5

h. In areas where the groundwater is above the top of the pipe, the test pressures shall be increased by 0.433 per foot of groundwater (e.g., if the groundwater is 11-1/2 feet, the 3.5 to 2.5 pressure drop will be increased by 5 psi; the time then will be measured for a pressure drop from 8.5 psi to 7.5 psi.)

3. Safety Precautions During Air Test

a. The air test may be dangerous if, because of ignorance or carelessness, a line is improperly prepared. It is extremely important that the various plugs be installed and braced in such a way as to prevent blowouts. Inasmuch as a force of 250 pounds is exerted on an 8-inch plug by an internal pipe pressure of 5 psi, it should be realized that sudden expulsion of a poorly installed plug or of a plug that is partially deflated before the pipe pressure is released can be dangerous.

b. As a safety precaution, pressurizing equipment should include a regulator set at perhaps 10 psi to avoid over-pressurizing and damaging an otherwise acceptable line. No one shall be allowed in the manholes during testing.

3.12 HYDROSTATIC TESTING

A. A hydrostatic test on ductile iron pipe with push-on type joints has two purposes: one is to set the gaskets in place, and the other is to provide a leakage test.

B. Said test shall include all ductile iron sewer pipe with push-on type joints installed by the Contractor. The Contractor shall make arrangements with the Westfield Public Works Department or designee for scheduling the test after the sewer pipe has been accepted as being ready for testing. The test shall be performed in the presence of the Westfield Public Works Department or designee on the day mutually agreed upon.

C. Water for testing may be obtained from the Westfield Public Works Department or designee. The cost of the water supplied for such testing is to be paid by the Developer. The Contractor shall furnish all necessary equipment, piping, pumps, fittings, gauges, and operating personnel to properly conduct the test.

D. Hydrostatic test on ductile iron pipe with push-on type joints installed as gravity sewers and siphons shall be in accordance with the following provisions:

1. The ends of the sewer section being tested shall have test plugs or caps adapted with a tap of adequate diameter to fill and pressurize the system with water.

1. When a section is terminated at a manhole with a plain end (spigot), the pipe must extend into the manhole of sufficient length

2. to accommodate a restraining cap. The benchwall shall be formed in the manhole after the test section has been approved.

2. Water shall be introduced into the section to be tested at the lower end. The upper end shall have an orifice at the top of the plug or cap to expel air when filling the system with water. All air shall be expelled from the pipe.

3. The test plugs or caps shall be capable of withstanding an internal pressure of 175 psi.

4. The system shall be tested in conformance with Section 13 of AWWA Specifications 600, at 50 pounds per square inch over a period of not less than one hour. The system will not be acceptable until all leaks have been repaired.

5. Hydrostatic test may be dangerous if, because of ignorance or carelessness, a line is improperly prepared. It is extremely important that the various plugs be installed in such a way as to prevent blowouts. Inasmuch as a force of 2500 pounds is exerted on an 8-inch plug by an internal pipe pressure of 50 psi, it should be realized that sudden expulsion of a poorly installed plug or cap can be dangerous. As a safety precaution, no one shall be allowed in the manholes when the pipe is pressurized.

E. A hydrostatic test on ductile iron pipe with push-on type joints installed as force main shall be in accordance with Article 3.12, paragraph D., with the following exception:

1. The force main shall be subjected to an internal pressure equal to 50% more than the maximum operating pressure, but in no case less than 50 psig or greater than 120 psig.

3.13 MANHOLE VACUUM TESTING

A. A vacuum test shall be conducted by the Contractor on all manholes to ensure watertightness and manhole integrity.

B. The equipment required to conduct a vacuum test on manholes includes inflatable pipe plugs, test head, vacuum pump, flexible air hose, and a vacuum gage. The test equipment shall be capable of drawing a vacuum of 10-inch Hg. The equipment shall be designed specifically for the purpose of testing manholes and shall be as manufactured by P.A. Glazier, Inc., Worchester, Massachusetts 10002, or equal.

C. The procedure for conducting an air test on manholes shall be in accordance with the following procedure:

1. Each manhole shall be tested immediately after assembly and prior to setting the casting or backfilling around the structure.

2. All lift holes shall be plugged with non-shrink grout.

3. All pipes entering the manhole shall be securely plugged and adequately braced against the inside of the manhole to prevent being drawn out of the pipe.

4. The test head shall be placed on the inside of the cone section and sealed with an inflatable seal.

5. A vacuum of 10 inches of mercury (Hg) shall be drawn and the vacuum pump shut off. With the valves closed, the time shall be measured for the vacuum to drop to 9 inches. The manhole shall pass if the time is greater than the following:

Manhole Size	Minimum Test Time
48"	60 seconds
60"	75 seconds
72"	90 seconds

3.14 CLOSED CIRCUIT TELEVISION INSPECTION

A. All sections of sewers shall be inspected by closed circuit television.

B. All unacceptable conditions found during television inspection must be corrected by the Contractor and re-televised.

C. Unacceptable conditions are conditions that adversely affect the ability of the system to function as designed or to be properly maintained and may include, but are not limited to, the following:

1. Protruding taps
2. Cracked or faulty pipe
3. Misaligned or deformed pipe
4. Debris in line
5. Infiltration / exfiltration
6. Excessive gaps at joints
7. Bellies or sags with a depth greater than or equal to 10% (or a maximum of 1-1/2 inches) of pipe diameter and/or a length greater than 25 feet.

D. See Specification Section 02750 Sewer Televising for procedures.

3.15 RECORD DRAWINGS

A. The Contractor shall prepare or be responsible for the preparation and submittal of record drawings as described in Section 01001, Article 1.17.

B. Record drawings shall be certified to accuracy by a registered professional Engineer.

PART 4 - FIGURES

4.1 STANDARD DETAILS

Figure	Description
S-1	Standard Sanitary Manhole Detail
S-2	Standard Sanitary Manhole Spacer Ring Detail
S-3	Standard Sanitary Manhole Frame and Cover Details
S-4	Force Main Discharge Detail
S-5	Sewer Pipe Bedding Details
S-6	Concrete Encasement Detail
S-7	Drop Pipe Details
S-8	Alternate Drop Pipe Details
S-9	Jacking and Boring Detail
S-10	House/Building Service Detail-1
S-11	House/Building Service Connection Detail-2
S-12	House/Building Service Bedding Detail
S-13	House/Building Service Clean-out Detail
S-14	Grease Trap Detail

END OF SECTION 02731

REVISIONS:

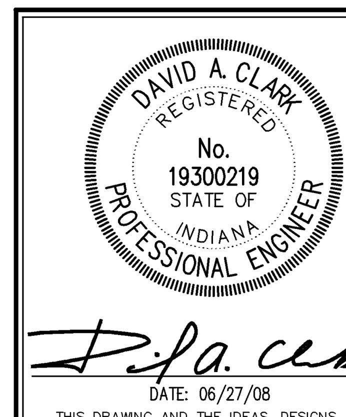

DATE: 06/27/08

THIS DRAWING AND THE IDEAS, DESIGNS AND CONCEPTS CONTAINED HEREIN ARE THE EXCLUSIVE INTELLECTUAL PROPERTY OF THE SCHNEIDER CORPORATION, AND ARE NOT TO BE USED OR REPRODUCED, IN WHOLE OR IN PART, WITHOUT THE WRITTEN CONSENT OF THE SCHNEIDER CORPORATION.

© COPYRIGHTED BY THE SCHNEIDER CORP. (2008)

Schneider

THE SCHNEIDER CORPORATION
Historic Fort Harrison
8901 Otis Avenue
Indianapolis, IN 46216-1037
Telephone: 317.826.7100
Fax: 317.826.7300
www.schneidercorp.com

Architecture
Civil Engineering
Environmental Engineering
Geotechnical Services
GIS * LIS
Home Builder Services
Interior Design
Land Surveying
Landscape Architecture
Transportation Engineering

CENTENNIAL SOUTH EXPANSION
WESTFIELD, INDIANA

ESTRIDGE DEVELOPMENT CO., INC.
CARMEL, INDIANA

DATE: 06/27/08	PROJECT NO.: 3915.004
DRAWN BY: PCJ	CHECKED BY: JLF

SHEET TITLE: GRAVITY SANI. SEWER SPECS. FOR THE TOWN OF WESTFIELD

DRAWING FILES: R:\3k\3915\004\DWGS\C901-C905

SHEET NO.: C904

R:\3k\3915\004\dwgs\C901-C905.dwg, 6/30/2008 1:12:54 PM, KIP 7204.pc3

SECTION 02721 - STORM SEWERS

PART 1 - GENERAL

1.1 GENERAL

A. This section covers all work necessary for the construction of the storm sewer piping systems and related items complete, including catch basins and inlet drains, manholes, junction chambers, diversion chambers, outfall structures, and miscellaneous structures.

B. This specification covers the following types of materials for storm sewers, culverts, underdrains, inlet drains, conduits, and miscellaneous applications:

1. Reinforced Concrete Pipe and Fittings
2. Polyvinyl Chloride Pipe (PVC)
3. Corrugated Metal Pipe
4. Structural Plate Arches
5. Aluminum or Aluminized Steel Pipe and Structural Plate
6. Multi-Plate Pipe and Pipe Arches
7. PVC Composite Pipe
8. Corrugated Polyethylene Pipe- SSD (Perforated and Non-Perforated)

C. All storm sewer systems shall be reinforced concrete pipe (RCP), meeting the requirements set forth in Part 2.2, and shall be a minimum of twelve (12) inch in diameter; unless otherwise approved by the Westfield Public Works Department.

D. All lots shall have access to a subsurface or storm drain or open ditch.

E. Storm sewer systems shall have a minimum of five hundred (500) feet between structures.

F. Bench walls shall be shaped and formed for a clean transition with proper hydraulics to allow the smooth conveyance of flows through the structure. The bench wall shall form a defined channel, to a minimum height of the spring line of the pipe.

G. Bench walls shall be formed using full depth Class "A"concrete. Solid concrete block, stone or sand shall not be permitted as a base or filler for the construction of the bench wall.

H. This specification requires project plans and construction specifications to be submitted to and approved by all appropriate regulatory agencies prior to beginning any work.

1.2 PIPE MARKING

Each length of pipe shall bear the name or trademark of the manufacturer, the location of the plant, and the date of manufacture. Each length shall likewise be marked to designate the class or strength of the pipe. The marking shall be made on the exterior or interior of the pipe barrel near the bell or groove end and shall be plainly visible.

1.3 SUBMITTALS

Before construction and preferably before fabrication, the Contractor shall submit to the Westfield Public Works Department for approval calculations on the thickness or strength class and drawings showing pipe lengths, joints, and other construction and installation details.

PART 2 - PRODUCTS

2.1 MATERIALS

The Town of Westfield Public Works Department may, at their option, specify a material to be used on the drawings; and the Developer or Contractor shall furnish and install the pipe material or materials specified and will only offer other equal materials.

1. REINFORCED CONCRETE PIPE AND FITTINGS

A. Reinforcing concrete pipe and fittings shall conform to ASTM C76, latest revision, for circular pipe and ASTM C507 for elliptical pipe.

B. Reinforced concrete pipe and fittings for normal conditions shall be reinforced in accordance with ASTM C76, Class III, IV or V, Wall B (minimum). Acceptance shall be on the basis of Subsection 4.1.1 of ASTM C76.

C. Circumferential reinforcing in circular pipe shall be required. Only with approval from the Westfield Public Works Department will elliptical reinforcing or combination of elliptical and circumferential reinforcing or part circular reinforcing shall be permitted, in circular pipe.

D. Concrete pipe shall be steam cured and shall not be shipped from point of manufacture for at least five days after having been cast.

E. Joints shall conform to the requirements of ASTM C443. Gaskets shall be of an oil resistant type having a maximum swell of 90% when tested in accordance with ASTM D471. Lubricant for jointing shall be approved by gasket manufacturer.

1. All rubber gaskets similar to and equal to "Press-Seal" or "Tylox" conforming to ASTM Designation C443, latest revision. The gasket shall be attached to the spigot of the pipe and shall be the sole element depended upon to make the joint flexible and practically watertight.

2. Butyl mastic joint sealant in rope or trowel applied form specifically made for permanently sealing joints in tongue and groove concrete sewer pipe. The material shall adhere tightly to the pipe surface and form a tight, flexible joint. The material shall have been in use for at least five years. Test results and material specifications shall be submitted to the Westfield Public Works Department and shall have been approved prior to use on the project.

2. POLYVINYL CHLORIDE PIPE AND FITTINGS

Polyvinyl chloride (PVC) pipe and fittings shall comply with ASTM D 3034.

2.4 CORRUGATED METAL PIPE AND PIPE ARCHES

A. The following specifications shall govern the manufacture of the corrugated steel pipe and pipe arches.
1. Specifications for Zinc Coated (galvanized) Steel Sheets (ASTM A444).
2. Manufacture of Corrugated Steel Culverts and Underdrains (AASHTO M-36).
3. Structural Plate for Pipe, Pipe Arches, and Arches (AASHTO M167.
4. Bituminous Coated Corrugated Steel Pipe and Arches (AASHTO M-190).
5. Sheet Material (ASTM A525).

B. Bituminous Coated Welded Seam Helically Corrugated Steel Pipe: The pipe shall be fabricated from flat coils. The base metal, spelter coating, and fabrication shall meet the applicable requirements of AASHTO M-36. Corrugations shall be 2-2/3-inch pitch by 1/2-inch depth. Each pipe shall have two annular corrugations rolled in each end. After the ends are rolled, the pipe shall be coated with bituminous material, inside and outside, to a minimum thickness of 0.05 inch as required by AASHTO M190 for Type A coating.

C. Bituminous Coated and Paved Invert Welded Seam Helically Corrugated Steel Pipe

1. The pipe shall be fabricated from flat coils. The base metal, spelter coating, and fabrication shall meet the applicable requirements of AASHTO M-36. Corrugations shall be 2-2/3-inch pitch by 1/2-inch depth. Each pipe shall have two annular corrugations rolled in each end.

2. After the ends are rolled, the pipe shall be coated with bituminous material, inside and outside, to a minimum thickness of 0.05 inch. In addition, bituminous material shall be applied to form a smooth pavement in the bottom 25% of pipe and in the bottom 40% of pipe arch as required by AASHTO M-190 for Type C coating.

D. Smooth Lined Welded Seam Helically Corrugated Steel Pipe

1. The pipe shall be fabricated from flat coils. The base metal, spelter coating, and fabrication shall meet the applicable requirements of AASHTO M-36. Corrugations shall be 2-2/3-inch pitch by 1/2-inch depth. Each pipe shall have two annular corrugations rolled in each end. Each pipe shall have two lifting lugs welded to the outside of the pipe.

2. After the ends have been rolled, the pipe shall be coated with bituminous material, inside and outside, to a minimum thickness of 0.05 inch as required by AASHTO M-190 for Type A coating. The pipe shall be centrifugally lined on the inside with bituminous material to form a smooth surface which fills the corrugations to a minimum thickness of 1/8 inch above the crests of the corrugations. The bituminous lining material shall meet the requirements of AASHTO M-190.

2.5 CORRUGATED METAL PIPE COUPLINGS

Bituminous Coated Pipe Couplings: Coupling bands shall be the same base metal and spelter coating as the pipe. Bands shall be 0.064-inch thick and 10-1/2 inches wide. Bands shall be bituminous coated and shall have two corrugations 7-5/8 inches center to center. Bands 12-inch diameter through 30-inch diameter shall be one-piece, and 36-inch diameter through 96-inch diameter shall be two-piece. Band laps 12-inch diameter through 48-inch diameter shall be joined by one galvanized bar, bolt, and strap connector. Band laps 54-inch diameter through 96-inch diameter shall be joined by two galvanized bar, bolt, and strap connectors.

2.6 ALUMINUM OR ALUMINIZED STEEL CORRUGATED PIPE AND STRUCTURAL PLATES

A. Aluminum Alloy Structural Plate

1. Aluminum alloy plates and fasteners intended for use in the construction of structural plate pipe and pipe arch for storm sewers shall meet the applicable requirements of AASHTO M-219. The plate shall be fabricated from aluminum alloy 5052 H141. The chemical composition of the plates shall conform to ASTM B209 alloy 5052.

2. The corrugations shall have a pitch of 9 inches plus or minus 3/8 inch and depth of 2-1/2 inches plus or minus 1/8 inch. The inside crown radius of the corrugations shall be not less than 2 inches.

3. The structural plate pipe or arches shall be assembled in accordance with the manufacturer's erection instructions and in accordance with the drawings.

B. Aluminized Steel Pipe and Arches

1. Aluminized coated corrugated steel pipe and pipe arch intended for use in the construction of storm sewers shall meet the applicable requirements of AASHTO M-36. Sheet material shall meet the latest revision of ASTM A525 and AASHTO M-274. The coils from which the pipe is produced shall be coated with 1.0 ounce per square foot of commercially pure aluminum.

2. Pipe shall be furnished circular or as a pipe-arch shape as required and shall be fabricated with helical corrugations and a continuous welded seam extending from end to end of each length of pipe.

3. Each end of each pipe with the welded seam shall have two annular corrugations reformed to permit joining with hugger bands.

4. Coupling bands shall be hugger bands.

2.7 MULTI-PLATE PIPE AND PIPE ARCHES

A. Multi-plate pipe and pipe arch structures shall be in accordance with AASHTO M-167. They shall be made with steel sections with corrugations 6 inches wide by 2 inches deep running at right angles to the section.

B. Bolts and nuts shall be special heat-treated galvanized 3/4-inch diameter bolts in accordance with ASTM specifications.

C. Multi-plate pipes and pipe arches shall be designed in accordance with the manufacturer's design criteria and in accordance with the drawings.

D. Detailed instructions regarding erection shall be furnished by the manufacturer.

2.8 PVC COMPOSITE PIPE AND FITTINGS

ABS or PVC composite pipe and fittings shall conform to ASTM D 2680, Latest Revision.

2.9 CORRUGATED POLYETHYLENE PIPE AND FITTINGS

A. Pipe Materials: Corrugated polyethylene pipe shall comply with the requirements fore materials, test methods, dimensions, and marking in accordance with AASHTO M-252 for pipe diameters 6" - 10", AASHTO M-294 for pipe diameters of 12" - 48", and AASHTO MP7 for 54" and 60".

B. The resin material shall meet ASTM D3350 cell classification 335400C.

C. Pipe Joints: The pipe lengths shall be connected using a gasketed, bell and spigot joint. This joint shall consist of a factory installed, gasketed double bell polyethylene coupling, a factory welded bell or integral bell. The spigot end of the pipe shall be furnished with a factory installed elastomeric profile "O-ring" rubber gasket that meets ASTM F-477.

D. The pipe shall be shipped with a removable wrap to protect the gasket. Provide lubrication to the joint prior to pushing together. At least two (2) corrugations of the spigot end must insert into the bell end.

E. Certification: All HDPE pipe shall be certified through the Plastic Pipe Institute (PPI) Third Party Certification Program. All HDPE pipe delivered and installed shall bear the Third Party Administered PPI Seal.

2.10 MANHOLES AND OTHER STRUCTURES

A. Manholes shall be constructed of monolithic concrete or precast manhole sections. Precast manhole sections shall conform to requirements of ASTM Specification C478, latest revision.

B. Materials for manholes, junction chambers, diversion chambers, and miscellaneous concrete structures shall comply with the following:

1. Cement shall be Portland cement and shall meet the requirements of ASTM Specification C150, ACI 301, and ACI 318. Concrete for precast manhole sections shall be 3000 psi concrete. Monolithic manholes shall use 4000 psi concrete. Ready-mix concrete shall conform to ASTM C94, Alternate 2. Maximum size of aggregate shall be 3/4 inch. Slump shall be between 2 and 5 inches.

2. Forms for chamber and structures shall be plywood or other approved material. Steel forms shall be used for the inside face of monolithic concrete manholes.

3. Reinforcing steel shall conform to ASTM A615, Grade 60 deformed bars, or ASTM A616 Grade 60 deformed bars.

1. Mortar Materials:

1. Sand - ASTM Designation C144, passing a No. 8 sieve.
2. Cement - ASTM Designation C150, Type 1.
3. Water - shall be potable.

1. The manufacturer shall provide openings for sewers entering and leaving the manhole. Any additional openings needed to be made in the field shall be made by drilling holes at least 1/2 inch in diameter with a maximum spacing of 3 inches.

2. Manhole steps shall be made from a steel reinforcing rod encapsulated in a copolymer polypropylene resin. The manhole steps shall equal or exceed OSHA requirements.

3. Any other special manholes, junction chambers, diversion chambers, and miscellaneous concrete structures shall be constructed as detailed on the drawings.

4. Manhole bases shall be set on a minimum of six (6) inches of # 8 aggregate.

C. Concrete ends sections shall have a minimum of an eighteen (18) inch toe plate, either poured in place or precast, bolted to the end section per Standard Detail (ST-9). Corrugated end sections with toe plates shall require Westfield Public Works approval.

2.11 CATCH BASINS

A. During construction, precautionary measures such as adequate screening of grates shall be maintained to deter earth and other materials from entering the drains.

B. Catch Basins, for sediment control, locations to be determined by a Professional Engineer, and approved by the Westfield Public Works Department. Catch Basins shall be located within easily accessible dedicated easements or right of way of sufficient size to facilitate the required maintenance of these structures

C. Catch basins and curb inlet structures which are 2 feet x 2 feet in size shall not have a depth deeper than four (4) feet from the invert of the lowest pipe to the lowest part of the rim elevation of the casting. All structures which do not meet this criteria shall be a manhole type, which is forty-eight (48) inches in diameter.

2.12. CASTINGS

A. Cast iron or ductile iron frames and gratings for catch basins and drain inlets shall be as shown on the drawings. Bearing surfaces shall be clean and shall provide uniform contact. Castings shall be tough, close-grained gray iron, sound, smooth, clean, free from blisters, blow holes, shrinkage, cold shuts, and all defects and shall conform to ASTM A48 Class No. 30-B.

B. During construction, precautionary measures such as adequate screening of grates shall be maintained to deter earth and other materials from entering the drains.

C. The following castings types are required:

1. Manholes - Neenah R 1772 A or equivalent
2. Beehive Inlets - Neenah R 4342 or equivalent
3. "Roll Curb" Inlets - Neenah 3501 - TR or TL or equivalent
4. "Chair Back" Curb Inlet - Neenah 3287 - 10V or equivalent
5. Other types shall require approval of the Westfield Public Works Department.

D. Curb inlets castings which possess open backs or have grate bars parallel to traffic flow (are not "bicycle safe") will not be accepted by the Westfield Public Works Department.

E. Storm sewer castings manhole covers, beehive inlets, curb inlets or other approved casting shall have the following phrases cast in recessed letters two (2) inches in height:

a. "Storm Sewer"

b. "Drains to River" or "Drains To Waterway"

c. "Dump No Waste"

d. Other phrases shall require approval of the Westfield Public Works Department.

F. All castings frames shall have a horizontal bearing surface around the entire perimeter of the frame in order to support the cover or grate.

2.13. SUBSURFACE TILES

A. Unless otherwise approved, perforated subsurface drain tiles, footer drains, or sump pumps lines shall connect to a storm structure. Storm sewer connections shall be provided by either precast or drilled holes, which are to be a minimum of two (2) inches larger the O.D. of the connecting tile. Drain tile connections shall be made with either "Tee" or "Wye" method.

B. Blind connections to storm sewer pipes shall not be allowed.

C. Subsurface tile as specified herein may be used to convey water collected in sump pits and footer drains to an acceptable storm sewer outlet, provided these drain tiles are properly sized to accept these flows.

D. Gutter or building drains shall not be allowed to outlet directly into storm sewer systems.

E. Double wall smooth core corrugated polyethylene tile, manufactured under specification ASTM F 667, shall be required for all subsurface drain tile installed in swales. Single wall corrugated polyethylene drain tile shall be required for curb sub-grade drainage.

F. Polyethylene tile shall possess male and female pipe ends, which allow the construction of overlapping, gasket pipe joints, in conformance with the requirements of ASTM D 3212. The gasket material shall conform to all requirements of ASTM F 477. As an alternative, pipe joints utilizing external couplings bands will be accepted, provided the minimum AASHTO requirements for satisfying soil tightness are also achieved.

G. Storm sewer pipe shall be of the size shown on the drawings and shall meet all requirements of these specifications. Subsurface drains (SSD) shall have a minimum of five hundred (500) feet between structures. Subsurface drains shall have clean-outs installed every 500 feet or at changes in direction.

H. Rear yard swales shall have a minimum slope of 2% gradient. Swales less than a 2% gradient are required to have double-wall perforated drain tile installed two (2) feet below the invert of the swale. Minimum swale slope shall be greater than 1% gradient. Subsurface drains shall have a minimum slope of .5% gradient.

I. Proposed road grades will be required to be graded within two (2) inches of the proposed sub-grade prior to installation of SSD. Trench width for SSD shall be a minimum of three (3) inches on both sides of the SSD, with a minimum trench width of twelve (12) inches.

PART 3 - EXECUTION

3.1 INSPECTION AND REJECTION OF PIPE

A. The quality of all materials, the process of manufacture, and the finished pipe shall be subject to inspection and approval by the Westfield Public Works Department or designee. Such inspection may be made at the place of manufacture or on the work after delivery, or at both places; and the pipe shall be subject to rejection at any time on account of failure to meet any of the specifications' requirements even though sample pipes may have been accepted as satisfactory at the place of manufacture.

B. Prior to being lowered into the trench, each pipe shall be carefully inspected and those not meeting the specifications shall be rejected and at once removed from the work.

C. The Westfield Public Works Department shall have the right to cut cores from such pieces of the concrete pipe as he desires for such inspection and tests as he may wish to apply. The Developer/Contractor shall pay for the samples of an Independent Laboratory Testing.

D. Holes left by the removal of cores shall be filled in an approved manner by and at the expense of the manufacturer of the pipe.

E. The Westfield Public Works Department shall also have the right to take samples of concrete after it has been mixed, or as it is being placed in the forms or molds, and to make such inspection and tests thereof as he may wish.

F. Any pipe which has been damaged after delivery will be rejected and replaced solely at the Contractor's expense.

3.2 HANDLING PIPE

Each pipe section shall be handled into its position in the trench only in such manner and by such means as the Westfield Public Works Department or designee approves as satisfactory. As far as practicable, the Contractor will be required to furnish slings, straps, and other approved devices to permit satisfactory support of all parts of the pipe when it is lifted.

3.3 NOTICE TO WESTFIELD PUBLIC WORKS DEPARTMENT

The Westfield Public Works Department or designee shall be notified when the pipes are to be laid in the trench. At least 15 feet of the pipe shall, under ordinary circumstances, be laid before covering begins.

3.4 LAYING PIPE

A. All pipes shall be reinspected for soundness and damage due to handling immediately before being lowered into the trench. Any pipe found to be unsound or damaged will be rejected and shall be removed immediately from the site of the work..

B. No portion of a Storm Sewer pipe, open culvert, manhole, inlet, or subsurface tile system shall be installed directly or indirectly onto frozen ground or with frozen backfill materials.

C. Where ground water is encounter, the contractor shall make every effort necessary to secure a dry trench bottom prior to installation of the storm water system. The contractor shall be required to maintain the groundwater level below the base of the excavation. The Town, nor the Westfield Public Works Department, will not assume any liability for the actions of the Developer or Contractor in the performance of the required dewatering operation. If trench conditions outlined in this section cannot be achieved, the Westfield Public Works Department or designee may terminate installation until such efforts can be achieved.

D. All pipes shall be laid accurately to the required line and grade as shown on the drawings, and in the manner prescribed by the pipe manufacturer and appropriate ASTM Specifications, to form a close, concentric joint with the adjoining pipe and to bring the invert of each section to the required grade. The supporting of pipe on block will not be permitted.

E. Pipe lying shall precede upgrade, beginning at the lower end of the sewer.

F. Practically watertight work is required, and the Contractor shall construct the sewers with the type of joint specified.

G. Joints between precast structures shall be sealed with (1) An approved rubber gasket manufactured and installed in accordance with ASTM C 443, latest version, (2) A Â½ inch diameter non-asphaltic mastic (Kent Seal or approved equal) conforming to AADHTO M-198 and Federal Specifications SS 521-A, or 4 (3) mortar or butyl rubber sealed on the outside and (4) mortar sealed on the inside and brushed smooth.

H. The annular space between the pipe and precast structure walls shall be filled inside and outside with a grout mixture composed of 2 parts of fine aggregate and one part of Portland Cement or Class "A" Concrete.

I. All pipes shall be laid to the line and grade as shown on the drawings. Variations from a uniform line and grade as shown on the drawings shall be cause for the line to be rejected.

J. The ends of the pipe shall be satisfactorily cleaned just before laying, and the joint shall be made in a satisfactory manner in accordance with the recommendations of the manufacturer of the particular type of joint. All joint work shall be done by experienced workmen.

K. All pipes shall be bedded as described in this specification under Pipe Bedding. Bell holes shall be excavated in advance of pipe laying so the entire pipe barrel will bear uniformly on the prepared subgrade.

L. Each length of pipe shall be mechanically pulled "home" with a winch or come-along against the section previously laid and held in place until the trench and bedding are prepared for the next pipe section. Care shall be taken in laying the pipe so not to damage the bell or the spigot end of the pipe. Mechanical means consisting of a cable placed inside the pipe with a winch, jack, or come-along shall be considered to pull the pipe home where pushing the pipe will not result in a joint going completely home and staying in place.

M. The Contractor shall use laser beam equipment, surveying instruments, or other proven techniques to maintain accurate alignment and grade.

N. Open excavation shall be satisfactorily protected at all times. At the end of each day's work, the open ends of all pipes shall be protected against the entrance of animals, children, earth, or debris by bulkheads or stoppers. The bulkheads or stoppers shall be perforated to allow passage of water into the installed pipe line to prevent flotation of the pipe line. Any earth or other material that may find entrance into the main sewer or into any lateral sewer through any such open end of unplugged branch must be removed at the Contractor's expense. The cost of all such plugs, and the labor connected therewith, must be included in the regular bid for the sewers.

O. Storm sewer which outlets into a Hamilton County Regulated Drain shall be approved, inspected, and constructed per the latest standards of the Hamilton County Surveyorâ€™s Office Standards.

3.5 PIPE BEDDING AND HAUNCHING

A. Each pipe section shall be laid in a firm foundation of bedding material and haunched and backfilled with care.

B. Prior to pipe installation, carefully bring bedding material to grade along the entire length of pipe to be installed. To provide adequate support for the pipe, the following bedding procedures are recommended.

1. When Angular 60 to 12 mm (1/4 to 1/2-inch) clean graded stone, slag, or crushed stone material is used for bedding, little or no compaction is necessary due to the nature of the angular particles. A depth of 4 to 6 inches is generally sufficient to provide uniform bedding. If Class I material is used for bedding, it must also be utilized for haunching up to or higher than the spring line of the pipe to avoid loss of side support through migration of Class II haunching material into the bedding.

2. Take care with coarse sands and gravels and maximum size 20 mm (3/4-inch) materials, to provide uniformly compacted bedding. Excavate the bedding material or place it to a point above the pipe bottom, determining such point by the depth of loose material resulting in the preparation of the bedding and the amount of compaction that will be required to bring the material to grade. Use hand or mechanical tamping to compact the bedding material to a minimum 85% Standard Proctor Density.

3. Slightly damp material will generally result in maximum compaction with a minimum of effort. If water is added to improve compaction or if water exists in the trench, take care to avoid saturation of Class II material, which could result in additional stability problems. Check grade of bedding after compaction.

C. Bedding material shall have a minimum thickness beneath the pipe of 4 inches (100 mm) or one-eighth of the outside diameter of the pipe, whichever is greater, and shall extend up the sides of the pipe one-sixth of the outside diameter of the pipe.

D. The rigid pipe, such as concrete or ductile iron, backfill between the bedding material and a plane 12 inches (300 mm) over the top of the pipe shall be hand-placed finely divided earth, free from debris and stones, or granular backfill if required.

E. For flexible pipe, corrugated metal pipe, the placement of embedment material or haunching around the pipe must be done with care. The ability of the pipe to withstand loading in a trench depends a large part on the method employed in its installation. If crushed stone, pea gravel, or graded gravel or sand is used to backfill between the bedding material and a plane 12 inches (300 mm) over the top of the pipe, it shall be hand placed. If fine sand, silt, or clayey gravels are used for initial backfilling over the pipe, the material shall be hand placed in 6- to 8-inch layers and hand compacted on both sides of the pipe to an elevation 12 inches (300 mm) over the top of the pipe. Care should be taken so not to compact directly over the pipe.

F. In yielding subsoils, the trench bottom shall be undercut to the depth necessary and backfilled with graded, crushed stone to form a firm foundation.

G. Where excavation occurs in rock or hard shale, the trench bottom shall be undercut and a minimum of 6 inches (150 mm) crushed stone bedding placed prior to pipe installation.

3.6 CONCRETE CRADLE (CLASS "A" BEDDING)

Concrete cradles shall be constructed of Class "B" concrete and of the design shown on the detailed drawings.

3.7 MANHOLES AND OTHER STRUCTURES

A. Manholes and other structures are to be constructed at locations shown on the drawings and in accordance with the following specifications:

1. Precast concrete manhole sections shall conform to ASTM Designation C478, except as modified herein:

a. The joint design of the precast sections shall consist of a bell or groove on one end of the unit of pipe and a spigot or tongue on the adjacent end of the joining section.

b. The joint shall consist of a flat rubber gasket attached to the spigot end of the precast manhole section and shall conform to Sections 6.1.6, 6.1.7 and 9 of ASTM Designation 443, latest revision.

1. Openings in manhole sections for sewer connections shall be cut at the point of manufacture and shall be circular or horseshoe shaped with grooved or roughened surfaces to improve mortar bond.

2. Manhole bases shall be cast-in-place concrete, reinforced as shown on the Standard Detail Sheet. Manhole bases shall be cast on a minimum of 6 inches of compacted crushed stone.

3. Manhole channels or inverts (flow lines) shall be preformed and poured with Class "B" concrete to the spring line of the connecting pipe. The finished invert shall be a semi-circular shaped smooth channel directing the flow to the downstream sewer.

4. Manhole frames and lids shall be of good quality cast iron, conforming to ASTM Designation A48 and as shown on Detail #2 on the Standard Detail Sheet (See Section 2-11 C-1). Unless specifically designated otherwise, manhole castings shall be the non-locking type. The joint between the casting frame and cone section shall be fully mortared or gasketed and coated with butyl rubber or a coal tar epoxy coating upon reaching its final set to become a watertight joint.

5. Manhole steps shall be made from a steel reinforcing rod encapsulated in a copolymer polypropylene resin. Steps shall be placed as shown on the drawings.

3.8 FINAL SEWER CLEANING

A. Prior to final acceptance and final manhole-to-manhole inspection of the sewer system by the Westfield Public Works Department or designee, all parts of the storm system shall be flush and clean. Remove all accumulated construction debris, rocks, gravel, sand, silt, and other foreign material from the sewer system at or near the closest downstream manhole. If necessary, use mechanical rodding or bucketing equipment.

B. Upon the Westfield Public Works Department or designee final manhole-to-manhole inspection of the sewer system, if any foreign matter is still present in the system, reflush and clean the sections and portions of the lines as required.

3.9 CLOSED CIRCUIT TELEVISION INSPECTION

A. All sections of storm sewer, including SSD shall be inspected by closed circuit television.

B. All unacceptable conditions found during television inspection must be corrected by the Contractor and re-televised.

C. Unacceptable conditions are conditions that adversely affect the ability of the system to function as designed or to be properly maintained and may include, but are not limited to, the following:

1. Protruding taps
2. Cracked or faulty pipe
3. Misaligned or deformed pipe
4. Debris in line
5. Infiltration / exfiltration
6. Excessive gaps at joints
7. Bellies or sags with a depth greater than or equal to 10% (or a maximum of 3 inches) of pipe diameter and/or a length greater than 25 feet.

D. See specification section 02750 Sewer Televising for procedures.

PART 4 - FIGURES

4.1 INDEX

Figure	Description
ST-1	Standard Storm Sewer Manhole Detail
ST-2	Type I Storm Sewer Manhole Detail
ST-3	Rolled Curb Inlet Casting
ST-4	Rolled Curb Inlet Casting
ST-5	Beehive Curb Inlet Casting
ST-6	Inlet Structure Type 1A
ST-7	Inlet Structure Type 1
ST-8	Type CA Catch Basin Detail
ST-9	Anchor Concrete End Sections
ST-10	Typical Swale
ST-11	Subsurface Drain (SSD) Without Swale
ST-12	Subsurface Drain (SSD) When Within Drip Line Of Existing Trees
ST-13	Subsurface Drain (SSD) Riser Detail

END OF SECTION 02721

REVISIONS:

DAVID A CLARK
REGISTERED
No. 19300219
STATE OF INDIANA
PROFESSIONAL ENGINEER

DATE: 06/27/08

THIS DRAWING AND THE IDEAS, DESIGNS AND CONCEPTS CONTAINED HEREIN ARE THE EXCLUSIVE INTELLECTUAL PROPERTY OF THE SCHNEIDER CORPORATION, AND ARE NOT TO BE USED OR REPRODUCED, IN WHOLE OR IN PART, WITHOUT THE WRITTEN CONSENT OF THE SCHNEIDER CORPORATION.

© COPYRIGHTED BY THE SCHNEIDER CORP.(2008)

Schneider

THE SCHNEIDER CORPORATION
Historic Fort Harrison
8901 Otis Avenue
Indianapolis, IN 46216–1037
Telephone: 317.826.7100
Fax: 317.826.7300
www.schneidercorp.com

Architecture
Civil Engineering
Environmental Engineering
Geotechnical Services
GIS * LIS
Home Builder Services
Interior Design
Land Surveying
Landscape Architecture
Transportation Engineering

CENTENNIAL SOUTH EXPANSION
WESTFIELD, INDIANA

ESTRIDGE DEVELOPMENT CO., INC.
CARMEL, INDIANA

DATE: 06/27/08
PROJECT NO.: 3915.004
DRAWN BY: PCJ
CHECKED BY: JLF
SHEET TITLE: STORM SEWER SPECIFICATIONS FOR THE TOWN OF WESTFIELD
DRAWING FILES: R:\3k\3915\004\DWGS\C901-C905
SHEET NO.: C905

R:\3k\3915\004\dwgs\C901-C905.dwg, 6/30/2008 1:13:48 PM, KIP 7204.pc3

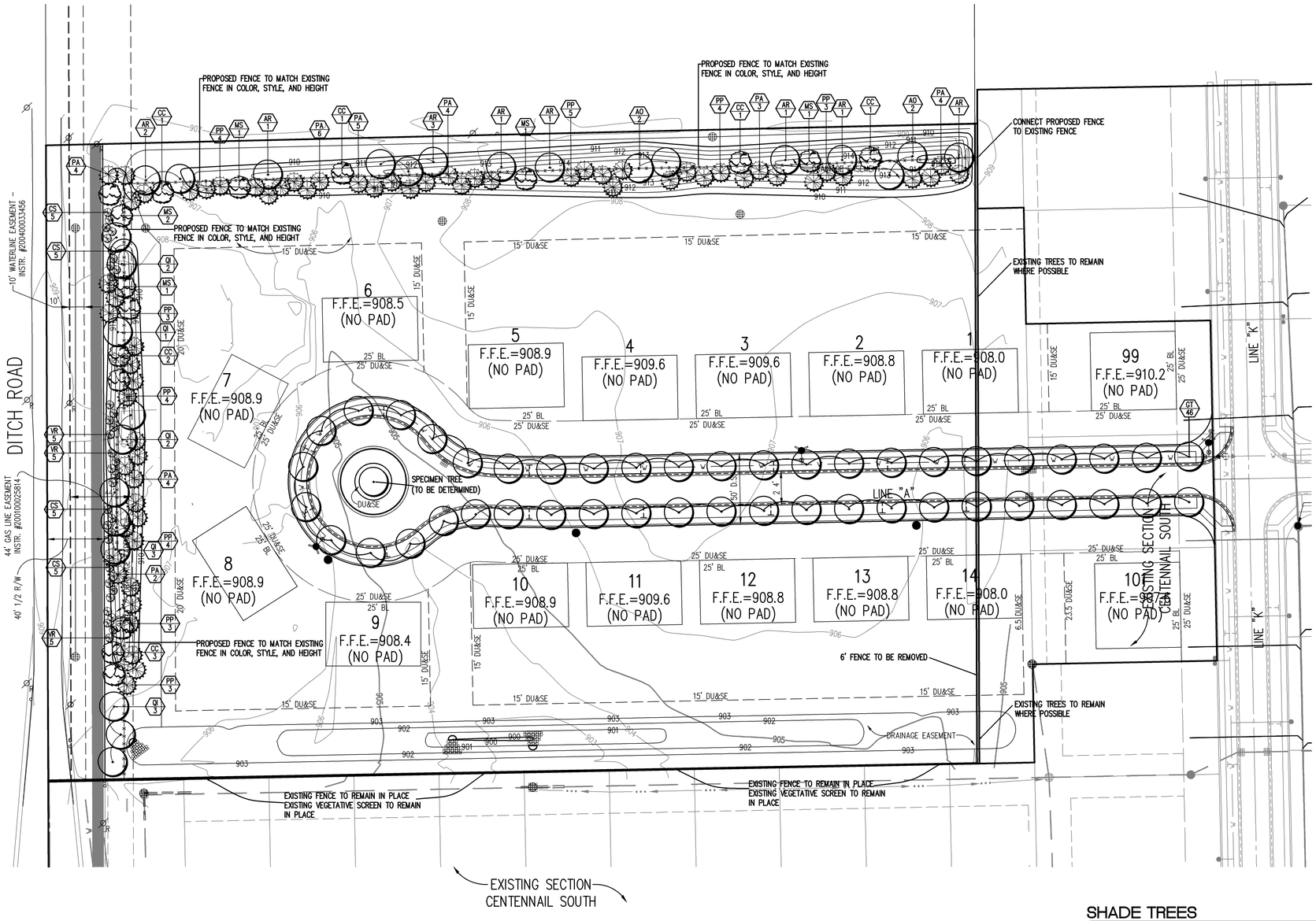

HOLEY MOLEY SAYS
"DON'T DIG BLIND"

"IT'S THE LAW"
CALL 2 WORKING DAYS BEFORE YOU DIG
1-800-382-5544
CALL TOLL FREE

PER INDIANA STATE LAW IS-69-1991. IT IS AGAINST THE LAW TO EXCAVATE WITHOUT NOTIFYING THE UNDERGROUND LOCATION SERVICE TWO (2) WORKING DAYS BEFORE COMMENCING WORK.

ASSUMED NORTH
SCALE: 1"=50'

LEGEND

- PERMANENT SEEDING
- SOD
- DECORATIVE STONE
- PERENNIALS
- CONSTRUCTION LIMITS
- MULCH LIMITS
- EXISTING TREELINE
- PROPOSED TREELINE
- EXISTING TREES
- CANOPY TREE
- ORNAMENTAL TREE
- EVERGREEN TREE
- DECIDUOUS SHRUB
- EVERGREEN SHRUB
- PLANT TAG (XX / 0)

SHADE TREES

AO	*Acer rubrum 'October Glory'*	*October Glory Red Maple*	–	2.5"	B & B	
AR	*Acer rubrum 'Red Sunset'*	*Red Sunset Red Maple*	–	2.5"	B & B	
GT	*Gleditsia triacanthos 'Impcole'*	*Imperial Honeylocust*	–	2.5"	B & B	
SJ	*Sophora japonica*	*Japanses Scholar Tree*	–	2.5"	B & B	
QI	*Quercus imbricaria*	*Shingle Oak*	–	2.5"	B & B	

UNDERSTORY TREES

CC	*Crataegus crus-galli inermis*	*Thornless Cockspur Hawthorn*	–	2"	B & B	
MS	*Magnolia Soulangiana*	*Saucer Magnolia*	–	2"	B & B	

EVERGREEN TREES

PA	*Picea abies*	*Norway Spruce*	–	6'	B & B	
PP	*Picea pungens*	*Colorado Spruce*	–	6'	B & B	*Straight Species*

EVERGREEN SHRUBS

VR	*Viburnum rhytidophylloides*	*Allegheny Viburnum*	–	36"	5 gal.	
CS	*Cornus sericea*	*Red Twig Dogwood*	–	36"	5 gal.	

REVISIONS:

DATE: 06/27/08

THIS DRAWING AND THE IDEAS, DESIGNS AND CONCEPTS CONTAINED HEREIN ARE THE EXCLUSIVE INTELLECTUAL PROPERTY OF THE SCHNEIDER CORPORATION, AND ARE NOT TO BE USED OR REPRODUCED, IN WHOLE OR IN PART, WITHOUT THE WRITTEN CONSENT OF THE SCHNEIDER CORPORATION.

© COPYRIGHTED BY THE SCHNEIDER CORP. (2008)

Schneider

THE SCHNEIDER CORPORATION
Historic Fort Harrison
8901 Otis Avenue
Indianapolis, IN 46216-1037
Telephone: 317.826.7100
Fax: 317.826.7200
www.schneidercorp.com

Architecture
Civil Engineering
Environmental Engineering
Geotechnical Services
GIS * LIS
Home Builder Services
Interior Design
Land Surveying
Landscape Architecture
Transportation Engineering

CENTENNIAL SOUTH EXPANSION

WESTFIELD, INDIANA

ESTRIDGE DEVELOPMENT CO., INC.
CARMEL, INDIANA

DATE: 06/27/08
PROJECT NO.: 3915.004
DRAWN BY: KRG
CHECKED BY: JLF
SHEET TITLE: LANDSCAPE PLAN

DRAWING FILES:
R:\3K\3915\004\DWGS\L101
XREF: 004BS
XREF: 3915004S
XREF: R:\3K\3915\004\DWGS\001BS

SHEET NO.: L101

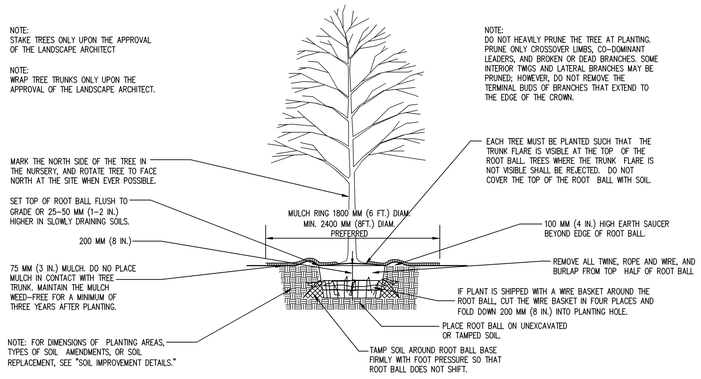

NOTE: THIS DETAIL ASSUMES THAT THE PLANTING SPACE IS LARGER THAN AN 8' SQUARE OPEN TO THE SKY, AND NOT COVERED BY ANY PAVING OR GRATING.

TREE PLANTING DETAIL FOR B&B IN ALL SOIL TYPES

7 / L801

NOT TO SCALE

WIRE OR CABLE SIZES SHALL BE AS FOLLOWS:
TREES UP TO 65 MM (2.5 IN.) CALIPER – 14 GAUGE
TREES 65 MM (2.5 IN.) TO 75 MM (3 IN.) CALIPER – 12 GAUGE

TIGHTEN WIRE OR CABLE ONLY ENOUGH TO KEEP FROM SLIPPING. ALLOW FOR SOME TRUNK MOVEMENT. PLASTIC HOSE SHALL BE LONG ENOUGH TO ACCOMMODATE 35MM (1.5 IN.) OF GROWTH AND BUFFER ALL BRANCHES FROM THE WIRE.

TUCK ANY LOOSE ENDS OF THE WIRE OR CABLE INTO THE WIRE WRAP SO THAT NO SHARP WIRE ENDS ARE EXPOSED.

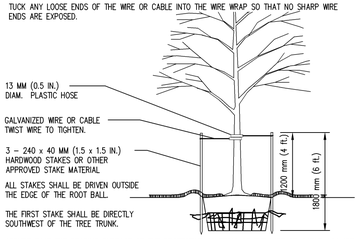

ASSURE THAT THE BEARING SURFACE OF THE PROTECTIVE COVERING OF THE WIRE OR CABLE AGAINST THE TREE TRUNK IS A MINIMUM OF 12 MM (0.5 IN.).

REMOVE ALL STAKING AS SOON AS THE TREE HAS GROWN SUFFICIENT ROOTS TO OVERCOME THE PROBLEM THAT REQUIRED THE TREE TO BE STAKED. STAKES SHALL BE REMOVED NO LATER THE END OF THE FIRST FULL GROWING SEASON AFTER PLANTING. IT SHALL BE THE CONTRACTOR'S RESPONSIBILITY TO REMOVE STAKING MATERIALS.

TREE STAKING DETAIL TREES 3" CALIPER OR LESS

4 / L801

NOT TO SCALE

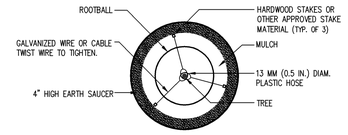

NOTE:
LOCATE 1 STAKE DIRECTLY SOUTHWEST OF TREE TRUNK

PLAN VIEW

TREE STAKING DETAIL

1 / L801

NOT TO SCALE

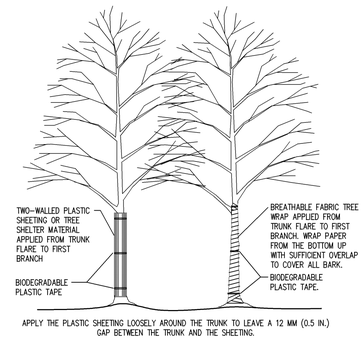

APPLY THE PLASTIC SHEETING LOOSELY AROUND THE TRUNK TO LEAVE A 12 MM (0.5 IN.) GAP BETWEEN THE TRUNK AND THE SHEETING.

OPTION 1 OPTION 2

TREE WRAP SHOULD BE INSTALLED AT TIME OF PLANTING AND BE REMOVED WHEN DIRECTED BY THE LANDSCAPE ARCHITECT, BUT NO LATER THAN 12 MONTHS AFTER PLANTING. CONTRACTOR IS RESPONSIBLE FOR REMOVAL OF WRAPPING.

TREE WRAPPING DETAIL

10 / L801

NOT TO SCALE

WIRE OR CABLE SIZES SHALL BE AS FOLLOWS:
TREES UP TO 65 MM (2.5 IN.) CALIPER – 14 GAUGE
TREES 65 MM (2.5 IN.) TO 75 MM (3 IN.) CALIPER – 12 GAUGE

TIGHTEN WIRE OR CABLE ONLY ENOUGH TO KEEP FROM SLIPPING. ALLOW FOR SOME TRUNK MOVEMENT. PLASTIC HOSE SHALL BE LONG ENOUGH TO ACCOMMODATE 35MM (1.5 IN.) OF GROWTH AND BUFFER ALL BRANCHES FROM THE WIRE.

TUCK ANY LOOSE ENDS OF THE WIRE OR CABLE INTO THE WIRE WRAP SO THAT NO SHARP WIRE ENDS ARE EXPOSED.

INSTALL THREE GUY WIRES PER TREE, SPACED EVENLY AROUND THE TRUNK.

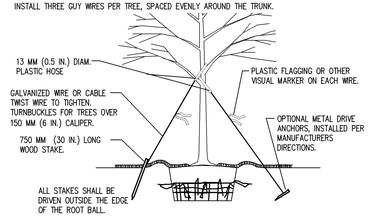

ASSURE THAT THE BEARING SURFACE OF THE PROTECTIVE COVERING OF THE WIRE OR CABLE AGAINST THE TREE TRUNK IS A MINIMUM OF 12 MM (0.5 IN.). REMOVE ALL STAKING AS SOON AS THE TREE HAS GROWN SUFFICIENT ROOTS TO OVERCOME THE PROBLEM THAT REQUIRED THE TREE TO BE STAKED. STAKES SHALL BE REMOVED NO LATER THE END OF THE FIRST FULL GROWING SEASON AFTER PLANTING. IT SHALL BE THE CONTRACTOR'S RESPONSIBILITY TO REMOVE STAKING MATERIALS.

TREE STAKING DETAIL TREES 3" CALIPER OR LARGER

8 / L801

NOT TO SCALE

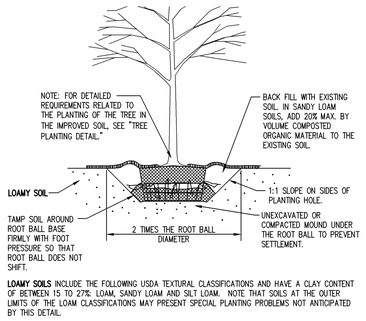

LOAMY SOILS INCLUDE THE FOLLOWING USDA TEXTURAL CLASSIFICATIONS AND HAVE A CLAY CONTENT OF BETWEEN 15 TO 27%: LOAM, SANDY LOAM AND SILT LOAM. NOTE THAT SOILS AT THE OUTER LIMITS OF THE LOAM CLASSIFICATIONS MAY PRESENT SPECIAL PLANTING PROBLEMS NOT ANTICIPATED BY THIS DETAIL.

LOAMY SOILS ARE DEFINED AS GRANULAR OR BLOCKY FRIABLE SOILS, A MIXTURE OF SAND, SILT AND CLAY PARTICLES WITH A MINIMUM OF 1.5% BY DRY WEIGHT ORGANIC MATTER. **THE SOIL MUST NOT BE SO COMPACTED AS TO IMPEDE ROOT GROWTH OR DRAINAGE.** THE SOIL STRUCTURE SHALL NOT BE PLATY OR MASSIVE. THE SOIL MUST BE TESTED FOR TEXTURE, DRAINAGE CAPABILITY, PH, AND NUTRIENT VALUES PRIOR TO DETERMINING ANY ADDITIONAL SOIL IMPROVEMENTS. CONTRACTOR SHALL CONSULT LANDSCAPE ARCHITECT IN POOR SOIL CONDITIONS.

NOTE: TREES PLANTED IN NON RESTRICTED SOIL CONDITIONS. THIS DETAIL ASSUMES THAT THE AREA OF LOAMY SOIL AVAILABLE TO EACH TREE IS A MINIMUM OF 500 SQUARE FEET.

SOIL IMPROVEMENT DETAIL

5 / L801

NOT TO SCALE

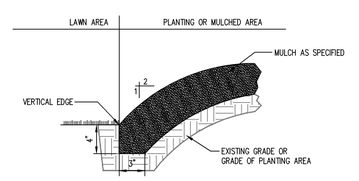

NOTE:
STEEL LAWN EDGING SHALL BE USED AT ALL LAWN EDGES AND AT EDGES OF MULCHED AREAS (FOR CONTAINMENT).

NOTE:
TRENCH EDGE SHALL CREATE A CLEAN SEPERATION BETWEEN AREAS; AND SHALL CREATE SMOOTH AND EVEN LINES (AS INDICATED ON THE PLANS).

SPADE EDGE

2 / L801

NOT TO SCALE

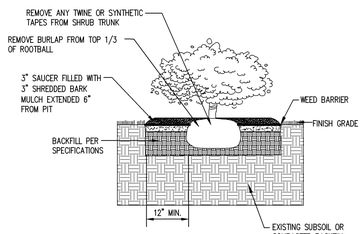

SHRUB DETAIL

11 / L801

NOT TO SCALE

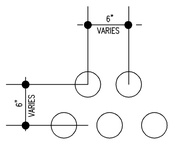

TYPICAL SPACING

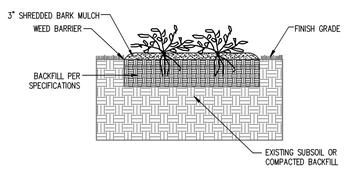

GROUNDCOVER DETAIL

9 / L801

NOT TO SCALE

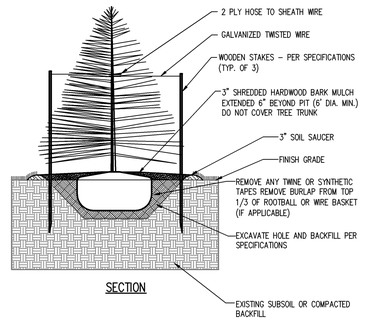

SECTION

EVERGREEN TREE DETAIL

6 / L801

NOT TO SCALE

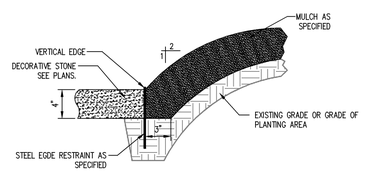

NOTE:
1. STEEL LAWN EDGING SHALL CREATE A CLEAN SEPERATION BETWEEN PLANTING AREAS AND LAWN EDGES.
2. CREATE SMOOTHAND EVEN LINES AS INDICATED ON PLANS.
3. DO NOT USE STEEL LAWN EDGING FOR SPECIMEN OR SINGLE TREE. FOR TREES TO BE LOCATED IN LAWN ARES, CUT MULCH RING TRENCH TO SAME DIMENSIONS.

STEEL EDGE

3 / L801

NOT TO SCALE

REVISIONS:

DATE: 06/27/08

THIS DRAWING AND THE IDEAS, DESIGNS AND CONCEPTS CONTAINED HEREIN ARE THE EXCLUSIVE INTELLECTUAL PROPERTY OF THE SCHNEIDER CORPORATION, AND ARE NOT TO BE USED OR REPRODUCED, IN WHOLE OR IN PART, WITHOUT THE WRITTEN CONSENT OF THE SCHNEIDER CORPORATION.

© COPYRIGHTED BY THE SCHNEIDER CORP.(2007)

Schneider

THE SCHNEIDER CORPORATION
Historic Fort Harrison
8901 Otis Avenue
Indianapolis, IN 46216-1037
Telephone: 317.826.7100
Fax: 317.826.7200
www.schneidercorp.com

Architecture
Civil Engineering
Environmental Engineering
Geotechnical Services
GIS * LIS
Home Builder Services
Interior Design
Land Surveying
Landscape Architecture
Transportation Engineering

CENTENNIAL SOUTH EXPANSION
WESTFIELD, INDIANA

ESTRIDGE DEVELOPMENT CO., INC.
CARMEL, INDIANA

DATE: 06/27/08	PROJECT NO.: 3915.004
DRAWN BY: KRG	CHECKED BY: JLF

SHEET TITLE: LANDSCAPE DETAILS

DRAWING FILES:

SHEET NO.: L801

LANDSCAPING

PART 1 – GENERAL

1.01 Related Documents
A. Drawings and general provisions of the Contract, including Conditions, Specification Sections, apply to this Section.
1.02 Summary
A. This Section includes the following:
1. Trees.
2. Shrubs.
3. Ground covers.
4. Plants.
5. Excavating and backfilling for trees, shrubs, ground covers and plants.

6. Removal of all rock encountered while installing drainage pits.
7. Placement of satisfactory fill and topsoil and final grading shown on drawings.
8. Topsoil and soil amendments.
9. Fertilizers and mulches.
10. Stakes and guys.
11. Initial maintenance of landscape materials.
B. Description: This work shall consist of furnishing, transporting, and installing all plants or other materials required for:
1. The establishment of landscape plantings community.
2. Post–planting maintenance until released by the Owner. An inspection will be conducted within one year of substantial completion. The Owner reserves the right to withhold the final 10% of contract amount until final acceptance inspection for complete job.
3. All remedial operations required to fulfill Contractor's obligations of these Specifications, the plans or as reasonably directed by the Owner.
4. Provide all exterior planting as shown on the drawings or inferable therefrom and/or as specified in accordance with the requirements of the Contract Documents.
5. These specifications include standards necessary for and incidental to the execution and completion of planting, including hauling and spreading of topsoil, and finished grading as indicated on the prepared drawings and specified herein.
6. Protection of existing features. During construction, protect all existing trees, shrubs, and other specified vegetation, site features and improvements, structures, and utilities specified herein and/or on submitted drawings. Removal or destruction of existing plantings is prohibited unless specifically authorized by the Owner.
1.03 Applicable Standards:
A. American National Standards for Tree Care Operations, ANSI A300. American National Standards Institute, 11 West 42nd Street, New York, NY 10036.
B. American Standard for Nursery Stock, ANSI Z60.1, American Nursery and Landscape Association, 1250 Eye Street, NW, Suite 500, Washington, D.C. 20005.
C. Hortus Third, The Staff of the L.H. Bailey Hortorium. 1976. MacMillan Publishing Co., New York.
D. All standards shall include the latest additions and amendments as of the date of advertisement for bids.
1.03 Submittals:
Submit the following unless directed otherwise by Landscape Architect or Owner:
A. General: Submit each item in this Article according to the Conditions of the Contract Specification Sections.
B. Product certificates signed by manufacturers certifying that their products comply with specified requirements.
1. Manufacturer's certified analysis for standard products.
2. Analysis for other materials by a recognized laboratory made according to methods established by the Association of Official Analytical Chemists, where applicable.
3. Label data substantiating that plants, trees, shrubs, and planting materials comply with specified requirements.
C. Qualification data for firms and persons specified in the "Quality Assurance" Article to demonstrate their capabilities and experience. Include lists of completed projects with names and addresses, names and address of architects and owners, and other information specified.
D. Submit name of wholesale nursery source for plants within bid package. Include nursery phone numbers so that availability can be checked. Contractor may be required to provide updated plant source information as the project progresses. Sources with similar soil types and climate are desirable. Sources south of USDA Zone 5 will not be accepted.

E. Planting schedule indicating anticipated dates and locations for each type of planting.
F. Maintenance instructions recommending procedures to be established by Owner for maintenance of landscaping during an entire year. Submit before expiration of required maintenance periods.
1.05 Quality Assurance:
A. Installer Qualifications: Engage an experienced installer who has completed landscaping work similar in material, design, and extent to that indicated for this Project and with a record of successful landscape establishment.
1. Installer's Field Supervision: Require installer to maintain an experienced full–time supervisor on the Project site during times that landscaping is in progress.
B. Source Quality Control:
1. General: A Certificate of Nursery inspection from each State Department of Agriculture from which plants originate and/or a dated, current year Indiana Department of Natural Resources Nursery Dealer Certificate. The nursery must verify whether or not they are under a Gypsy Moth Compliance Agreement between the DNR and the United States Department of Agriculture or under an MA Japanese Beetle Quarantine. All plant material shipped from nursery vendors subject to quarantines must be accompanied by a 1997 Certificate of Compliance for gypsy moth and/or Japanese Beetle. To determine if vendors are subject to quarantines, call the DNR supervisor of Plant Regulatory Services.
2. Provide quality, size, genus, species, and variety of trees and shrubs indicated, complying with applicable requirements of ANSI Z60.1 "American Standard for Nursery Stock." Provide healthy, vigorous stock grown in recognized nursery in accordance with good horticultural practice and free of disease, insects, eggs, larvae and defects such as knots, sun–scald, injuries, abrasions or disfigurement.
3. Do not make substitutions. If specified landscape material is not obtainable, submit proof of non–availability to Landscape Architect, together with proposal for use of equivalent material prior to bid submittal.
4. Analysis and Standards: Package standard products with manufacturer's certified analysis. For other materials, provide analysis by recognized laboratory made in accordance with methods established by the Association of Official Agriculture Chemists, wherever applicable.
5. Inspection: The Landscape Architect/Owner may inspect trees and shrubs either at place of growth or at site before planting, for compliance with requirements for genus, species, variety, size, and quality. Architect retains right to further inspect trees and shrubs for size and condition of balls and root systems, insects, injuries and latent defects, and to reject unsatisfactory or defective material at any time during progress of work. Remove rejected trees or shrubs immediately from project site.
C. Measurements: Measure trees and shrubs according to ANZI Z60.1 with branches and trunks or canes in their normal position. Do not prune to obtain required sizes. Take caliper measurements 6 inches (150 m) above ground for trees up to 4 inch (100 mm) caliper size, and 12 inches (300 mm) above ground for larger sizes. Measure main body of tree or shrub for height and spread; do not measure branches or roots tip–to–tip.
1.5 Delivery, Storage, and Handling:
A. Packaged Materials: Deliver packaged materials in containers showing weight, analysis, and name of manufacturer. Protect materials from deterioration during delivery and while stored at site.
B. Sod: Harvest, deliver, store, and handle sod according to the requirements of the American Sod Producers Association's (ASPA) "Specifications for Turfgrass Sod Materials and Transplanting/Installing." Time delivery so that sod will be placed within 24 hours after stripping. Protect sod against drying and breaking of rolled strips.
C. Tress and Shrubs: Deliver freshly dug trees and shrubs. Do not prune before delivery, except as approved by Landscape Architect. Protect bark, branches, and root systems from sun–scald, drying, sweating, whipping, and other handling and tying damage. Do not bend or bind–tie trees or shrubs in such a manner as to destroy natural shape. Provide protective covering during delivery. Do not drop trees and shrubs during delivery.
D. Handle balled and burlapped and container stock by the root ball.
E. Deliver trees, shrubs, ground covers, and plants after preparations for planting have been completed and install immediately. If planting is delayed more than 6 hours after delivery, set planting materials in shade, protect from weather and mechanical damage, and keep roots moist. Do not deliver more plant material than can be planted in one day. If planting is delayed more than 6 hours:
1. Set balled stock on ground and cover ball with soil, peat moss, sawdust, or other acceptable material.
2. Do not remove container–grown stock from containers before time of planting.
3. Water root systems of trees and shrubs stored on site with a fine–mist spray. Water as often as necessary to maintain root systems in a moist condition.
1.06 Project Conditions:
A. Utilities: Determine location of above grade and underground utilities and perform work in a manner which will avoid damage. Hand excavate, as required. Maintain grade stakes until removal is mutually agreed upon by parties concerned.
B. Excavation: When conditions detrimental to plant growth are encountered, such as rubble fill, adverse drainage conditions, or obstructions, notify Landscape Architect before planting.
1.07 Coordination and Scheduling:
A. Planting Time: Proceed with and complete landscape work as rapidly as portions of site become available, working within seasonal limitations for each kind of landscape work required.
1. Plant or install materials only when ground and backfill is not frozen.
2. Correlate planting with specified maintenance periods to provide maintenance from date of substantial completion.
3. Install plant material between Mach and June and/or between September and December (whichever contract allows).
B. Coordination with Dirt Contractor: Plant trees and shrubs after final grades are established and prior to planting of lawns, unless otherwise acceptable to a Landscape Architect/Owner.
1.08 Warranty:
A. General Warranty: The special warranty specified in this Article shall not deprive the Owner of other rights the Owner may have under other provisions of the Contract Documents and shall be in addition to, and run concurrent with, other warranties made by the Contractor under requirements of the Contract Documents.
B. Special Warranty: Warrant the following living planting materials for a period of one year after date of Final Completion, against defects including death and unsatisfactory growth, except for defects resulting from lack of adequate maintenance, neglect, or abuse by Owner, abnormal weather conditions unusual for warranty period, or incidents that are beyond Contractor's control.
1. Trees.
2. Shrubs.
3. Ground covers.
4. Plants.
C. Remove and replace dead planting materials immediately unless required to plant in the succeeding planting season.
D. Replace planting materials that are more than 25 percent (25%) dead or in an unhealthy condition at end of warranty period.
E. A limit of one replacement of each plant material will be required, except for losses or replacement due to failure to comply with requirements.

1.09 Tree and Shrub Maintenance:
A. Maintain trees and shrubs by pruning, cultivating, watering, weeding, fertilizing, restoring planting saucers, tightening and repairing stakes and guy supports, and resetting to proper grades or vertical position, as required to establish healthy, viable plantings. Spray as required to keep trees and shrubs free of insects and disease. Restore or replace damaged tree wrappings. Maintain trees and shrubs for the following period:
1. Maintenance Period: 12 months following Substantial Completion.
Maintenance should occur on a semi–monthly basis.
1.10 Ground Cover and Plant Maintenance:
A. Maintain ground cover and plants by watering, weeding, fertilizing, and other operations as required to establish healthy, viable plantings for the following period:
1. Maintenance Period: 12 months following Substantial Completion.
Maintenance should occur on a semi–monthly basis. Watering shall be coordinated with Owner.

PART 2 – PRODUCTS
2.01 Plants:
A. Plants shall be true to species and variety specified and nursery–grown in accordance with good horticultural practices under climatic conditions similar to those in the locality of the project for at least two years. They shall have been freshly dug (during the most recent favorable harvest season).
1. All plant names and descriptions shall be as defined in *Hortus Third*.
2. All plants shall be grown and harvested in accordance with the *American Standard for Nursery Stock*.
3. Unless approved by the Landscape Architect, plants shall have been grown at a latitude not more than 200 miles (325 km) north or south of the latitude of the project unless the provenance of the plant can be documented to be compatible with the latitude and cold hardiness zone of the planting location.
B. Unless specifically noted, all plants shall be of specimen quality, exceptionally heavy, symmetrical, and so trained or favored in development and appearance as to be unquestionably and outstandingly superior in form, compactness and symmetry. They shall be sound, healthy, vigorous, well branched, and densely foliated when in leaf; free of disease and insects, eggs, or larvae, and shall have healthy, well–developed root systems. They shall be free from physical damage or other conditions that would prevent vigorous growth.
1. Trees with multiple leaders, unless specified, will be rejected. Trees with a damaged or crooked leader, bark abrasions, sun–scald, disfiguring knots, insect damage, or cuts of limbs over ? in. (20 mm) in diameter that are not completely closed will be rejected.
C. Plants shall conform to the measurements specified, except that plants larger than those specified may be used if approved by the Landscape Architect. Use of larger plants shall not increase the contract price. If larger plants are approved, the root ball shall be increased in proportion to the size of the plant.
1. Caliper measurements shall be taken on the trunk 6 in. (150 mm) above the natural ground line for trees up to and including 4 in. (100 mm) in caliper, and 12 in. (300 mm) above the natural ground line for trees over 4 in. (100 mm) in caliper. Height and spread dimensions specified refer to the main body of the plant and not from branch tip to branch tip. Plants shall be measured when branches are in their normal position. If a range of sizes is given, no plant shall be less than the minimum size, and no less than 50 percent (50%) of the plans shall be as large as the maximum size specified. Measurements specified are minimum sizes acceptable after pruning, where pruning is required. Plants that meet measurements but do not possess a standard relationship between height and spread, according to the *American Standard for Nursery Stock*, shall be rejected.
D. Substitutions of plant materials will not be permitted unless authorized in writing by the Landscape Architect. If proof is submitted in writing that a plant specified is not obtainable, consideration will be given to the nearest available size or similar variety, with a corresponding adjustment of the contract price.
E. The plant list at the end of this section , or on the drawing, is for the Contractor's information only, and no guarantee is expressed or implied that quantities therein are correct or that the list is complete. The Contractor shall ensure that all plant materials shown on the drawings are included in his or her bid.
F. All plans shall be labeled by plant name. Labels shall be attached securely to all plants, and containers of plant materials when delivered. Plant labels shall be durable and legible, with information given in weather–resistant ink or embossed process lettering.
G. Selection and Tagging:
1. Plants shall be subject to inspection for conformity to specification requirements and approval by the Landscape Architect at their place of growth and upon delivery. Such approval shall not impair the right of inspection and rejection during progress of the work.
2. A written request for the inspection of plant material at their place of growth shall be submitted to the Landscape Architect at least ten (10) calendar days prior to digging. This request shall state the place of growth and the quantity of plants to be inspected. The Landscape Architect may refuse inspection at this time if, in his or her judgment, sufficient quantities of plants are not available for inspection.
3. All plants shall be selected and tagged by the Landscape Architect at their place of growth. For distant material, photographs may be submitted for pre–inspection review.
4. All field grown deciduous trees shall be marked to indicate the trees north orientation in the nursery. Place a 1 in. diameter spot of white point onto the north side of the tree trunk within the bottom 12 inches of the trunk.
H. Anti–Desiccants:
1. Anti–desiccants, if specified, are to be applied to plants in full leaf immediately before digging or as required by the Landscape Architect. Anti–desiccants are to be sprayed so that all leaves and branches are covered with a continuous protective film.
2. Anti–desiccant: shall be an emulsion specifically manufactured for agricultural use, which provides a protective film over plant surfaces. Anti–desiccants shall be delivered in containers of the manufacturer and shall be mixed according to the manufacturer's directions. Submit manufacturer literature for approval.
I. Balled and Burlapped (B&B) Plant Materials:
1. Trees designated B&B shall be properly dug with firm, natural balls of soil retaining as many fibrous roots as possible, in sizes and shapes as specified in the *American Standard for Nursery Stock*. Balls shall be firmly wrapped with nonsynthetic, rottable burlap and secured wit nails and heavy, nonsynthetic, rottable twine. The root collar shall be apparent at surface of ball. Trees with loose, broken, processed, or manufactured root balls will not be acceptable, except with special written approval before planting.
J. Container Plants:
1. Plants grown in containers shall be of appropriate size for the container as specified in the most recent edition of the *American Standard for Nursery Stock* and be free of circling roots on the exterior and interior of the root ball.
1. Container plants shall have been grown in the container long enough to have established roots throughout the growing medium.
K. Bareroot and Collected Plants:
1. Plants designated as bareroot or collected plants shall conform to the *American Standard for Nursery Stock*.
2. Bareroot material shall not be dug or installed after bud break or before dormancy.
L. Immediately after harvesting plants, protect from drying and damage until shipped and delivered to the planting site. Rootballs shall be checked regularly and watered sufficiently to maintain root viability.
M. Transportation and Storage of Plant Material:
1. Branches shall be tied with rope or twine only, and in such a manner that no damage will occur to the bark or branches.
2. During transportation of plant material, the Contractor shall exercise care to prevent injury and drying out of the trees. Should the roots be dried out, large branches broken, balls of earth broken or loosened, or areas of bark torn, the Landscape Architect may reject the injured tree(s) and order them replaced at no additional cost to the Owner. All loads of plants shall be covered at all times with tarpaulin or canvas. Loads that are not protected will be rejected.
3. All bareroot stock sent from the storage facility shall be adequately covered with wet soil, sawdust, woodchips, moss, peat, straw, hay, or other acceptable moisture–holding medium, and shall be covered with a tarpaulin or canvas. Loads that are not protected in the above manner may be rejected.
4. Plants must be protected at all times from sun or drying winds. Those that cannot be planted immediately on delivery shall be kept in the shade, well protected with soil, wet mulch or other acceptable material, and kept well watered. Plants shall not remain unplanted any longer than three (3) days after delivery. Plants shall not be bound with wire or rope at any time so as to damage the bark or break branches. Plants shall be lifted and handled with suitable support of the soil ball to avoid damaging it.
N. Mechanized Tree Spade Requirements:
1. Trees may be moved and planted with an approved mechanical tree spade. The tree spade shall move trees limited to the maximum size for a similar B&B root–ball diameter according to the *American Standard for Nursery Stock* or the manufacturer's maximum size recommendation for the tree spade being used, whichever is smaller. The machine shall be approved by the Landscape Architect prior to use. Trees shall be planted at the designated locations in the manner shown in the plans and in accordance with applicable sections of the specifications.
2.02 Tree and Shrub Material:
A. General: Furnish nursery–grown trees and shrubs conforming to ANSI Z60.1, with healthy root systems developed by transplanting or root pruning. Provide well–shaped, fully–branched, healthy, vigorous stock free of disease, insects, eggs, larvae, and defects such as knots, sun–scald, injuries, abrasions, and disfigurement.
1. Soil balls shall not be broken or loose. If, when pulled, the stem or crown moves and the ball does not, the plant will be rejected.
2. The root flare should be at the soil line on top of the ball. The plant was planted too deep if you see the root flare deeper inside the ball with most of the roots near the bottom of the ball. If the uppermost roots are more than 4 inches below the top of the soil ball, the plant will be rejected.
3. Measure the width and depth of the root ball. Root systems must be in balance with the top of the plant. The roots must be of sufficient size to support the top of the plant.
4. Plants must have a balanced root system that is well distributed and not one–sided, circling or girdling.

5. Buds on plants (if visible) should be full, moist, and green inside when split apart.
6. Trees must have a defined central leader (leader) with a minimum of eight branches radiating to all sides of the tree. The tree is acceptable if it can be pruned to a center leader.
7. Minimum Tree Ball Requirement Size:
Spade Size (D=Diameter); Deciduous Shade Trees (C=Caliper); Evergreen Trees (H=Height)
D=34" C=2.5"
D=38" C=3.0"
D=44" C=3.5"
D=48" C=4.0"

D=28" H=6 ft.
D=30" H=7 ft.
D=44" H=12 ft.
D=48" H=13 ft.
D=48" H=14 ft.
D=52" H=15 ft.

8. Container plants are to grow in containers for a minimum of 90 days prior to delivery.
9. Roots must fill the soil ball of the container grown plant.
10. Root bound plants will be rejected.
B. Grade: Provide trees and shrubs of sizes and grades conforming to ANSI Z60.1 for type of trees and shrubs required. Trees and shrubs of a larger size may be used if acceptable to Landscape Architect, with a proportionate increase in size of roots or balls.
1. In size grading B&B trees, caliper shall take precedence over height. Where a minimum and maximum size (i.e. size range) is specified the average of the lot should approximate the midpoint of the specified size range.
C. Label all trees and shrubs of each variety, size and caliper with a securely attached, waterproof tag bearing legible designation of botanical and common name
2.03 Shade and Flowering Trees:
A. Shade Trees: Single–stem trees with straight trunk, well–balanced crown, and intact leader, of height and caliper indicated, conforming to ANSI Z60.1 for type of trees required.
1. Branching Height: As indicated in paragraph 2.4C.
2. Multistem or clump forms with 3 main trunks shall be provided when specified.
B. Small Trees: Small upright or spreading type, branched or pruned naturally according to species and type, and with relationship of caliper, height, and branching recommended by ANSI Z60.1, and stem form as follows:
1. Form: Single stem.
2. Form: Multistem, clump, with 2 or more stems.
3. Form: Multistem, shrub, with multiple stems.
C. Provide balled and burlapped trees.
2.04 Deciduous Shrubs:
A. Form and Size: Deciduous shrubs with not less than the minimum number of canes required by and measured according to ANSI Z60.1 for type, shape, and height of shrub.
B. Provide balled and burlapped deciduous shrubs..
1. Container–grown deciduous shrubs will be acceptable in lieu of balled and burlapped deciduous shrubs subject to meeting ANSI Z60.1 limitations for container stock.
2.05 Ground Covers and Plants:
A. Provide ground covers and plants established and well rooted in removable containers or integral peat pots and with not less than the minimum number and length of runners required by ANSI Z60.1 for the pot size indicated.
2.06 Grass Materials:
A. Sod: Certified turfgrass sod complying with ASPA specifications for machine–cut thickness, size, strength, moisture content, and mowed height, and free of weeds and undesirable native grasses. Provide viable sod of uniform density, color, and texture, strongly rooted, and capable of vigorous growth and development when planted.
B. Seed: Seed mixture "R" as described in Section 621.06 of the 1999 Indiana Department of Transportation Standard Specifications Section 621.06 (a).
C. Mulch: Mulch method A or B as described in Section 621.05 of 1999 Indiana Department of Transportation Standard Specifications and Section 621.05 ?.
2.07 Fill Material:
A. Satisfactory Fill Materials: ASTMD 2487 soil classification groups GW, GP, GM, SW, SP and SM; free of rock or gravel larger than 2 inches (50 mm)in any dimension, debris, water, frozen materials, vegetation and other deleterious matter.
B. Topsoil: Provide topsoil that is fertile, friable, natural loam, surface soil, reasonably free of subsoil, clay, limps, brush, weeds and other litter, and free of roots, stumps, stones larger than 1 inch in any direction, and other extraneous or toxic matter harmful to plant growth. Topsoil shall contain a minimum two percent (2%) organic matter.
1. Topsoil Source: Import topsoil from off–site sources. Obtain topsoil from naturally well–drained sites where topsoil occurs at least 4 inches (100 mm) deep; do not obtain from bogs or marshes.
C. Drainage Fill: Washed evenly graded mixture of crushed stone with 100 percent (100%) passing a 1 ½ inch sieve, and not more than 5 percent passing a No. 8 sieve.
2.08 Fertilizer:
A. Commercial Fertilizer: Commercial–grade complete fertilizer of neutral character, consisting of fast– and slow–nitrogen, 50 percent (50%) derived from natural organic sources of urea–form, phosphorous, and potassium in the following composition:
1. Slow–Release Fertilizer for Trees and Shrubs: Granular fertilizer consisting of 50 percent (50%) water–insoluble nitrogen, phosphorus, and potassium in the following composition:
a. Composition: 5 percent (5%) nitrogen, 10 percent (10%) phosphorous, and 5 percent (5%) potassium, by weight.
2. Fertilizer for reconditioning of lawns: 1 lb. Per 1,000 sq. ft. of actual nitrogen, 4 percent (4%) phosphorous, and 2 percent (2%) potassium be weight.
2.09 Mulches:
A. Organic Mulch: Organic mulch, free from deleterious materials and suitable as a top dressing of trees and shrubs, consisting of the following:
1. Type: Shredded hardwood bark.
2.10 Stakes and Guys:
A. Upright and Guy Stakes: Rough–sawn, sound, new hardwood, redwood, or pressure–preservative–treated softwood, free of knots, holes, cross grain, and other defects 2 by 2 inches (50 by 50 mm) by length indicated, pointed at one end.
B. Upright Tree Stake and Tie Wire: ASTM A641 (ASTM A 641M), Class 1, galvanized–steel wire, 2–strand, twisted, 0.106 inch (2.7 mm) in diameter.
C. Tree Guy Cable: 5–strand, 3/16 inch (4.8 mm) diameter, galvanized–steel cable, with zinc–coated turn buckles, 3 inch (75 mm) long minimum, with two 3/8 inch (10 mm) galvanized eyebolts, All guy wires shall be marked with white flags to prevent safety hazard.
D. Hose Chafing Guard: Reinforced rubber or plastic hose a least ½ inch (13 mm) in diameter, black, cut to lengths required to protect tree trunks from damage.
E. Trunk–Wrap Tape: Two layers of crinkled paper cemented together with bituminous material, 4 inches (102 mm) wide minimum, with stretch factor of 33 percent.

PART 3 – EXECUTION
3.01 Examination:
A. Examine areas to receive landscaping for compliance with requirements and for conditions affecting performance of work of the Section. Do not proceed with installation until unsatisfactory conditions have been corrected.
3.02 Preparation:
A. Lay out individual tree and shrub locations and areas for multiple plantings. Stake locations, and secure Owner's/Landscape Architect's acceptance before the start of planting work. Make minor adjustments as may be required.
3.03 Planting Soil Preparation:
A. Before mixing, clean topsoil of roots, plants, sods, stones, clay lumps, and other extraneous materials harmful to plant growth.
B. Mix soil amendments as specified on planting details. Mix fertilizers with topsoil at rates indicated. Delay mixing fertilizer if planting does not follow placing of planting soil within a few days.
C. For tree pit or trench backfill, mix planting soil before backfilling and stockpile at site.
1. Provide specified fertilizer at a rate of:
a. Shade tree – 2 pounds per inch of caliper.
b. Small trees – 1 pound per inch of caliper.
D. For planting beds, mix planting soil either prior to planting or apply on surface of topsoil and mix thoroughly before planting.
1. Apply specified commercial fertilizer at rates and thoroughly mix into upper 2" of topsoil. Provide specified fertilizer at the following rates:
a. Shrubs – ¼ pound per foot height or spread.
b. Evergreens – 1/8 pound per foot height or spread.
c. Herbaceous Plants – 1/8 pound per plant.
3.04 Ground Cover and Perennial Plant Bed Preparation:
A. Till soil in beds to a minimum depth of 8 inches (200 mm) and mix with specified fertilizers.
1. Use fertilizer at a rate of 2 pounds per 100 square feet.
3.05 Excavation for Trees and Shrubs:
A. Pits and Trenches: Excavate with vertical sides and with bottom of excavation slightly raised at center to assist drainage. Loosen hard subsoil in bottom of excavation.
1. Balled and Burlapped Trees and Shrubs: Excavate approximately 2 times as wide as ball diameter and equal to ball depth, plus the following setting layer depth:
a. Setting Layer: Allow 3 inches (75 mm) of planting soil.
2. Container–Grown Shrubs: Excavate to container width and depth, plus the following setting–layer depth:
a. Setting Layer: Allow 3 inches (75 mm) of planting soil.
B. Dispose of subsoil removed from landscape excavations. Do not mix with planting soil or use as backfill.
C. Obstructions: Notify Landscape Architect if unexpected rock or obstructions detrimental to trees or shrubs are encountered in excavations.
1. Hardpan Layer: Drill 6 inch (150 mm) diameter holes into free–draining strata or to a depth of 10 feet (3 m), whichever is less, and backfill with free–draining material.
D. Drainage: Notify Landscape Architect if subsoil conditions evidence unexpected water seepage or retention in tree or shrub pits.
1. Landscape Architect has the option to require the installation of 8" drainage pits at the bottom of the ball excavation to facilitate drainage. Use an 8" auger to dig 36" deep pit. Fill pit with washed drainage fill.
2. Rock's excavation includes removal and disposal of rock material and obstructions encountered that can be removed by the following heavy–duty rock excavating equipment.
a. Rock material includes boulders ½ cu. yd. (0.38 cu.m.) or more in volume and rock in beds, ledges, unstratified masses, and conglomerate deposits.
3. Rock excavating equipment for tree pits shall be equivalent to Caterpillar Model No. 215D LC track–mounted hydraulic excavator, equipped with a 42 inch (1050 mm) wide short–tip radius rock bucket, rated at not less than 120 hp (89 kW) flywheel power with bucket–curling force of not less than 25,000 LB (111 kN) and stick–crowd force of not less than 18,700 LB (83 kN), measured according to SAE Standard J1179.
4. Do not excavate rock until it has been cross–sectioned by Landscape Architect.
E. Fill excavations with water and allow it percolate out, before placing setting layer and positioning trees and shrubs.
3.06 Planting Trees and Shrubs:
A. Set balled and burlapped stock plumb and in center of it or trench with top of ball raised above adjacent finish grades as indicated.
1. Place stock on setting layer of compacted planting soil.
2. Remove burlap and wire baskets from tops of balls and partially from sides, but do not remove from under balls. Remove pallets, if any, before setting. Do not use planting stock if ball is cracked or broken before or during planting operation.
3. Place backfill around ball in layers, tamping to settle backfill and eliminate voids and air pockets. When pit is approximately ½ backfilled, water thoroughly before placing remainder of backfill. Repeat watering until no more is absorbed. Water again after placing and tamping final layer of backfill.
B. Set container–grown stock plumb and in center of pit or trench with top of ball raised above adjacent finish grades as indicated.
1. Carefully remove containers so as not to damage root balls.
2. Place stock on setting layer of compacted planting soil.
3. Place backfill around ball in layers, tamping to settle backfill and eliminate voids and air pockets. When pit is approximately ½ backfilled, water thoroughly before placing remainder of backfill. Repeat watering until no more is absorbed. Water again after placing and tamping final layer of backfill.
C. Dish and tamp top of backfill to form a 3 inch (75 mm) high mound around the rim of the pit. Do not cover top of root ball with backfill.
D. Wrap trees of 2 inch (50 mm) caliper and larger with trunk–wrap tape. Start at base of trunk and spiral cover trunk to height of first branches. Overlap wrap, exposing half the width, and securely attach without causing girding. Inspect tree trunks for injury, improper pruning, and insect infestation and take corrective measures required before wrapping.
3.07 Tree and Shrub Pruning:
A. Prune, thin, and shape trees and shrubs as directed by Landscape Architect.
3.08 Tree and Shrub Guy Staking:
A. Upright Staking and Tying: Stake trees of 2 through 5 inch (50 through 125 mm) caliper. Stake trees of less than 2 inch (50 mm) caliper only as required to prevent wind tip–out. Use a minimum of 2 stakes of length required to penetrate at least 18 inches (450 mm) below bottom of backfilled excavation and to extend at least 73 inches (1800 mm) above grade. Set vertical stakes and space to avoid penetrating balls or root masses. Support trees with 2 strands of tie wire encased in hose sections at contact points with tree trunk. Allow enough slack to avoid rigid restraint of trees.
B. Guying and Staking: Guy and stake trees exceeding 14 feet (4.2 m) and more than 3 inch (75 mm) caliper unless otherwise indicated. Securely attach no fewer than 3 guys to stakes 30 inches (760 mm) long, driven to grade. Attach flags to each guy wire, 30 inches (760 mm) above finish grade. Wrap trunk with tape as shown on details.
3.09 Planting Ground Cover and Plants:
A. Space ground cover and plants as indicated.
B. Dig holes large enough to allow spreading of roots, and backfill with planting soil. Work soil around roots to eliminate air pockets and leave a slight saucer indentation around plants to hold water. Water thoroughly after planting, taking care not to cover plant crowns with wet soil.
3.10 Fill:
A. Preparation: Remove vegetation, topsoil, debris, wet and unsatisfactory soil materials, obstructions, and deleterious materials from ground surface prior to placing fills.
B. When subgrade or existing ground surface to receive fill has a density less than that required for fill, break up ground surface to depth required, pulverize, moisture–condition or aerate soil and recompact to required density.
C. Place fill material in layers to required elevations for each location listed below.
1. Under grass, use satisfactory excavated or borrow soil material.
D. Place fill materials in layers not more than 8 inches (200 mm) in loose depth for material compacted by heavy compaction equipment, and not more than 4 inches (100 mm) in loose depth for material compacted by hand–operated tampers.
E. Place backfill and fill materials evenly on all sides of structures to required elevations. Place backfill and fill uniformly along the full length of each structure.
F. Percentage of Maximum Dry Density Requirements; Compact soil to not less than the following percentages of maximum dry density according to ASTM D 1557:
1. Under lawn or unpaved areas, compact the top 6 inches (150 mm) below subgrade and each layer of backfill or fill material at 80 percent (80%) maximum dry density.
3.11 Grading:
A. General: Uniformly grade areas to a smooth surface, free from irregular surface changes. Comply with compact requirements and grade to cross sections, lines, and elevations indicated.
1. Provide a smooth transition between existing adjacent grades and new grades.
2. Cut out soft spots, fill low spots, and trim high spots to conform to required surface tolerances.
B. Site Grading: Slope grades to prevent ponding. Finish subgrades to required elevations within ½".
3.12 Final Grading and Placement of Topsoil:
A. Loosen subgrade and lawn area to a minimum depth of 4 inches. Remove stones measuring over 1–1.2 inches in any dimension. Remove sticks, roots, rubbish, and other extraneous matter. Limit preparation to areas which will be planted promptly after preparation.
1. Spread topsoil to minimum depth required to meet lines, grades, and elevations shown, after light rolling and natural settlement. Minimum depth of topsoil shall be 4 inches unless otherwise indicated. In tree and shrub planting areas there shall be 18" – 24" topsoil. Around the plant, at least in an area equal to the plants' mature canopy size.
2. Place approximately ½ of total amount of topsoil required. Work into top of loosened subgrade to create a transition layer and then place remainder of topsoil.
3.13 Reconditioning Lawn and Seeding of Berms:
A. Recondition existing lawn areas or other Contractor's work damaged by operations, including storage of materials or equipment and movement of vehicles. Seed all berms installed by Landscape Contractors that are not in an existing lawn. Sod all berms installed by Landscape Contractor that are in existing lawns.
B. Remove sod and vegetation from damaged lawn areas; do not bury into soil. Remove topsoil containing foreign materials resulting from Contractor's operations, including oil drippings, fuel spills, stone, gravel, and other construction materials, and replace with new topsoil.
C. Where substantial lawn remains, mow, dethatch, core aerate, and rake. Remove weeds before seeding. Where weeds are extensive, apply selective herbicides as required. Do not use pre–emergence herbicides.
D. Remove waste and foreign materials, including weeds, soil cores, grass, vegetation, and turf, and legally dispose of it off the Owner's property.
E. Till stripped, bare, and compacted areas thoroughly to a depth of 6 inches (150 mm).
F. Apply initial fertilizers and mix thoroughly into top 4 inches (1000 mm) of soil. Fertilizer shall provide 1 lb. Per 1,000 sq. ft. of actual nitrogen, 4 percent (4%) phosphorous, and 2 percent (2%) potassium by weight. Provide new planting soil as required t fill low spots and meet new finish grades.
G. Apply sod, or seed and mulch as stated in Section 621.05 and 621.06 of the 1999 Indiana Department of Transportation Standard Specification.
H. Water newly planted areas and keep moist until new grass is established.
I. This work is not paid for directly but is included in the cost of other items.
3.14 Mulching:
A. Mulch backfilled surfaces of pits, trenches, planted areas, and other areas indicated.
B. Organic Mulch: Apply the following average thickness of organic mulch and finish level with adjacent finish grades. Do not place mulch against trunks or stems.
1. Thickness: 3 inches (75 mm).
3.15 Cleanup and Protection:
A. During landscaping, keep pavements clean and work area in an orderly condition.
B. Protect landscaping from damage due to landscape operations, operations by other contractors and trades, and trespassers. Maintain protection during installation and maintenance periods. Treat, repair, or replace damaged landscape work as directed.
3.16 Disposal of Surplus and Waste Materials:
A. Disposal: Remove surplus soil and waste material, including excess subsoil, unsuitable soil, trash and debris, and legally dispose of it off the Owner's property.
END OF SECTION

REVISIONS:

DATE: 06/27/08

THIS DRAWING AND THE IDEAS, DESIGNS AND CONCEPTS CONTAINED HEREIN ARE THE EXCLUSIVE INTELLECTUAL PROPERTY OF THE SCHNEIDER CORPORATION, AND ARE NOT TO BE USED OR REPRODUCED, IN WHOLE OR IN PART, WITHOUT THE WRITTEN CONSENT OF THE SCHNEIDER CORPORATION.
© COPYRIGHTED BY THE SCHNEIDER CORP.(2005)

Schneider
THE SCHNEIDER CORPORATION
Historic Fort Harrison
8901 Otis Avenue
Indianapolis, IN 46216–1037
Telephone: 317.826.7100
Fax: 317.826.7200
www.schneidercorp.com

Architecture
Civil Engineering
Environmental Engineering
Geotechnical Services
GIS * LIS
Home Builder Services
Interior Design
Land Surveying
Landscape Architecture
Transportation Engineering

CENTENNIAL SOUTH EXPANSION
WESTFIELD, INDIANA
ESTRIDGE DEVELOPMENT CO., INC.
CARMEL, INDIANA

DATE: 06/27/08	PROJECT NO.: 3915.004
DRAWN BY: KRG	CHECKED BY: JLF

SHEET TITLE: LANDSCAPE SPECIFICATIONS

DRAWING FILES:

SHEET NO.: L901