# CHANGE ORDER

No. 1

PROJECT: Midland Trace Trail – Phase 2 DATE OF ISSUANCE:

OWNER: City of Westfield – Park and Recreation
2728 East 171st Street
Westfield, IN 46074

CONTRACTOR: Gibraltar Construction Company

ORIGINAL CONTRACT DATE: 8-5-10

You are directed to make the following changes in the Contract Documents.

Description: Instead of installing traditional concrete footers for the wing walls and abutments for the bridge; changed to helical piers. See attached sheets.

Purpose Justification of Change Order: This will speed up construction timeline and decrease the overall construction cost.

| CHANGE IN CONTRACT PRICE | CHANGE IN CONTRACT TIME |
|---|---|
| Original Contract Price<br>$ 198,400 | Original Contract Time<br>11-1-10 (Completion)<br>days or date |
| Previous Change Order No.<br>$ N/A | Net change from previous Change Orders<br>N/A<br>days |
| Contract Price prior to this Change Order<br>$ 198,400 | Contract Time prior to this Change Order<br>11-1-10<br>days or date |
| Net Increase (Decrease) of this Change Order<br>$ (12,600) | Net Increase (Decrease) of this Change Order<br>( 5) Days<br>days |
| Contract Price with all approved Change Orders<br>$ 185,800 | Contract Time with all approved Change Orders<br>10-27-10<br>days or date |

RECOMMENDED:
by: Neil Van Trees
City of Westfield

APPROVED:
by:
Redevelopment Commission

APPROVED:
by:
Contractor

# City of Westfield
# Midland Trace Trail –
# East Leg- Phase 2

# Calculations

PROJECT:
**Midland Trace Trail – East Leg – Phase 2**

PREPARED FOR:
**AccuLevel**
**9495 North Waldron Road**
**Rossville, IN 46065**
**(765) 379-2617**

PREPARED BY:
**Silver Creek Engineering, Inc.**
**7225 Woodland Drive, Suite 200**
**Indianapolis, IN 46278**
**(317) 297-5610**

DATE:
**September 21, 2010**

DESIGNER:
**Scott Szentes, P.E.**
**Graeme Sharpe, P.E.**

JOB NUMBER:
**10331**

SEE CB501 - ADDENDUM FOR ABUTMENT DIMENSIONS

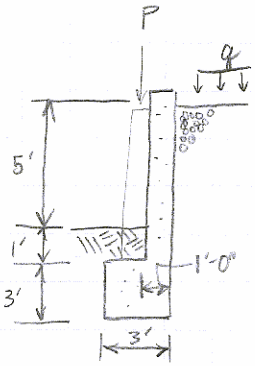


LATERAL LOADS:

DESIGN DATA

FRICTION COEFFICIENT $\mu_s = 0.30$

$\gamma_s = 115\ lb/ft^3$

$P_{DL} = 500\ lb/ft$

$q = 85\ lb/ft^3$

$e = 14''$ (FROM CTR OF STEM)

$P_{LL} = 500\ lb/ft$

AT-REST PRESSURE

$K_o = 1 - \sin\phi$

$= 0.5$

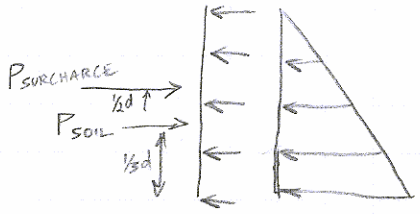


SOIL SURCHARGE

$$p = (\gamma_s \cdot d) + (85\ lb/ft^2 \cdot K_o)$$
$$= 115\ lb/ft^3 \cdot 6' + 42.5\ lb/ft^2$$
$$= 690\ lb/ft^2 + 42.5\ lb/ft^2 = 733\ lb/ft^2$$

$$P = \left(\tfrac{1}{2} b \cdot h\right) \cdot p_{soil} + b \cdot h \cdot p_{SURCHARGE}$$
$$= \left(\tfrac{1}{2} \cdot 1' \cdot 9'\right) \cdot 690\ lb/ft^2 + 1' \cdot 9' \cdot 42.5\ lb/ft^2$$
$$= 3105\ lb/ft + 383\ lb/ft$$
$$= 3487\ lb/ft$$

$$O.T.M. = P_{soil} \cdot d/3 + P_{SURCHARGE} \cdot d/2$$
$$= 3105\ lb/ft \cdot 3' + 383\ lb/ft \cdot 4.5'$$
$$= 9315\ lb\text{-}ft/ft + 1724\ lb\text{-}ft/ft$$
$$= 11040\ lb\text{-}ft/ft$$

RESISTANCE TO SLIDING

FRICTION

$$\text{WEIGHT} \times \mu_s = (\underbrace{500\ \text{lb/ft}}_{\text{BRIDGE DL}} + \underbrace{3^2 \cdot 150\ \text{lb/ft}^3}_{\text{FOOTING}} + \underbrace{1' \times 6' \times 150\ \text{lb/ft}^3}_{\text{STEM}}) \cdot 0.3$$

$$= (500\ \text{lb/ft} + 1350\ \text{lb/ft} + 900\ \text{lb/ft}) \cdot 0.3$$

$$= 2750\ \text{lb/ft} \cdot 0.3$$

$$R_f = 825\ \text{lb/ft}$$

PASSIVE SOIL FORCE

$$R_{PASSIVE} = (K_p \cdot \gamma_{SOIL} \cdot d_{TOE}) \cdot (\tfrac{1}{2} \cdot b \cdot d_{TOE})$$

$$= (3 \cdot 115\ \text{lb/ft}^3 \cdot 4') \cdot (\tfrac{1}{2} \cdot 1' \cdot 4')$$

$$= 1380\ \text{lb/ft}^2 \cdot 2\ \text{ft}^2/\text{ft}$$

$$R_p = 2760\ \text{lb/ft}$$

$$K_p = \tan^2(45 + \phi/2)$$

$$= \tan^2(45 + 30°/2)$$

$$= 3.0$$

FOR SLIDING, ADDITIONAL R MADE UP BY TIEBACK

$$\Sigma R \geq 1.5 \cdot V$$

$$R_f + R_p + R_{TIE} \geq 1.5 \cdot V$$

$$R_{TIE} \geq 1.5 \cdot V - R_f - R_p$$

$$\geq 1.5 \cdot 3487\ \text{lb/ft} - 825\ \text{lb/ft} - 2760\ \text{lb/ft}$$

$$\geq 1645.5\ \text{lb/ft}$$

TOTAL TIEBACK FORCE $\Sigma R_{TIE} = 1645.5\ \text{lb/ft} \cdot 32'$

$$= 52{,}660\ \text{lb}$$

RESISTANCE TO OVERTURNING

WEIGHT OF ABUTMENT

$M_{DL}$ = WEIGHT × DISTANCE
$= (1350\ lb/ft \cdot 3\tfrac{1}{2}) + (900\ lb/ft \cdot 2.5')$
$= 4275\ lb\text{-}ft/ft$

SUPERIMPOSED DEAD LOAD

$M_{SDL} = 470\ lb/ft \cdot 1.33'$
$= 625\ lb\text{-}ft/ft$

PASSIVE SOIL RESISTANCE @ TOE

$M_{TOE} = R_p \times d_{TOE}/3$
$= 2760\ lb/ft \cdot 4'/3$
$= 3680\ lb\text{-}ft/ft$

ADDITIONAL TIE FORCE REQ'D

$\Sigma M_R \geq 1.5 \cdot OTM$

$M_{TOE} + M_{DL} + M_{SDL} + M_{TIE} \geq 1.5 \cdot OTM$

$M_{TIE} \geq 1.5 \cdot 11040\ lb\text{-}ft/ft - 4275\ lb\text{-}ft/ft - 625\ lb\text{-}ft/ft - 3680\ lb\text{-}ft/ft$
$\geq 8000\ lb\text{-}ft/ft$

TOTAL TIEBACK MOMENT = 256,000 lb-ft

IF USING (2) TIEBACKS, TOTAL WORKING LOAD CAPACITY OF EACH IS $42.5^K$

AVAILABLE CAPACITY AFTER RESISTING SLIDING FORCE

$R = 42.5^K - 52{,}660\ lb/2$
$= 16.2^K$

TO GENERATE TOTAL TIEBACK MOMENT w/ $16.2^K$, MOVE TIEBACK LOCATION UP INTO ABUTMENT WALL (IN THICK PORTION) AND USE PASSIVE RESISTANCE OF LOWER SOIL TO RESIST FORCE

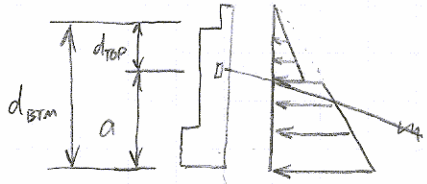


DETERMINE LOCATION OF ANCHORAGE THAT BALANCES FORCES AND O.T.M.

$$\Sigma F = \underbrace{F_{PASSIVE}}_{\text{BOTTOM}} + \underbrace{F_{AT\,REST}}_{\text{TOP}} - F_{TIE} = 0$$

$$= \left[\left(K_p \cdot \gamma_{SOIL} \cdot \tfrac{1}{2} \cdot (d_{BTM}^2 - d_{TOP}^2)\right) + \left(K_o \cdot \gamma_{SOIL} \cdot d_{TOP}^2 \cdot \tfrac{1}{2}\right)\right] \cdot b = F_{TIE}$$

$$= \left[\left(\tfrac{1}{2} \cdot \gamma_{SOIL} \cdot K_p \cdot (d_{BTM}^2 - d_{TOP}^2)\right) + \left(\tfrac{1}{2} \cdot \gamma_{SOIL} \cdot K_o \cdot d_{TOP}^2\right)\right] \cdot b = F_{TIE}$$

$d_{TOP} = d_{BTM} - a$

$F_{TIE} \leq 30^K$ ?

BALANCE MOMENT ABOUT ANCHOR LOCATION

$$\Sigma M = F_{PASSIVE} \cdot (a \cdot 2/3) - F_{AT\,REST} \cdot (d_{TOP})/3 + \cancel{F_{TIE} \cdot 0} \rightarrow 0 = 0$$

EQUATIONS ABOVE GIVE UPPER BOUND ON PASSIVE FORCE

$M_{ATREST} \leq M_{PASSIVE}$

$$\tfrac{1}{2} \cdot \gamma_{SOIL} \cdot K_o \cdot (d_{BTM}^2 - d_{TOP}^2) \leq F_{PASSIVE} \leq \left(\tfrac{1}{2} \cdot \gamma_{SOIL} \cdot K_p \cdot (d_{BTM}^2 - d_{TOP}^2)\right)$$

SOLVE SO THAT $M_{AT\text{-}REST} = M_{PASSIVE}$

$F_{PASSIVE} \leq$ PILE CAPACITY

$$F_{ATREST} \cdot (d_{TOP}/3) = F_{PASSIVE} \cdot \left(a \cdot \frac{2}{3}\right)$$

$$F_{PASSIVE} = F_{ATREST} \cdot (d_{TOP}/3) \Big/ (a \cdot 2/3)$$

IF ANCHOR IS LOCATED 3'-0" ABOVE BTM. FTG, THEN TOTAL TIE FORCE REQUIRED TO BALANCE OTM & RESIST LATERAL SLIDING IS:

$$F_{ATREST} = \tfrac{1}{2} \cdot \gamma_{SOIL} \cdot K_o \cdot d_{TOP}^2$$
$$= 1035 \ \text{lb/ft}$$

$$F_{PASSIVE} = \tfrac{1}{2} \cdot \gamma_{SOIL} \cdot (K_o, K_p) \cdot (d_{BTM}^2 - d_{TOP}^2)$$
$$= 7762.5 \ (\text{MAX}) \rightarrow 1294.8 \ (\text{MIN.})$$

FOR $M_{ATREST} \leq M_{PASSIVE}$

$$F_{PASSIVE} \geq F_{ATREST} \cdot (d_{TOP}/3) \Big/ (a \cdot 2/3)$$
$$\geq 1035 \ \text{lb/ft}$$

USE MIN. VALUE OF 1294.8 lb/ft

$$= 1294.8 \ \text{lb/ft}$$

$$F_{TIE} = F_{ATREST} + F_{PASSIVE} = 2329.8 \ \text{lb/ft}$$

TOTAL TIE-FORCE

$F_{TIE} = 2329.8\ lb/ft \cdot 32'$
$= 74{,}554\ lb$

PER HELICAL PIER

$F = 74{,}554\ lb/2$ FOR (2) PIERS
$= 37{,}277\ lb$

$F = 74{,}554/3$ FOR (3) PIERS
$= 24{,}851\ lb$

CHECK THAT BASE OF WALL DOES NOT ROTATE ABOUT ANCHOR LOCATION IN OTHER DIRECTION

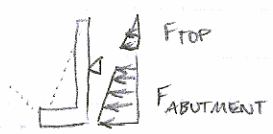


$F_{ABUTMENT} = 1294\ lb/ft$

$F_{TOP} = \frac{1}{2} \cdot \gamma_{SOIL} \cdot K_p \cdot d_{TOP}^2$
$= \frac{1}{2} \cdot 115\ lb/ft^3 \cdot 3 \cdot 6^2$
$= 6210\ lb/ft$

$F_R \geq F_{ABUTMENT}$ ✓

$M_R = F_R \cdot 6' \cdot 1/3$
$= 12{,}420\ lb\text{-}ft/ft$

$M_{ABUTMENT} = F_{ABUTMENT} \cdot 3' \cdot 2/3$
$= 2588\ lb\text{-}ft/ft$

$M_R \geq M_{ABUTMENT}$ ✓

CONCRETE DESIGN

VERT. FORCES

BRIDGE, FOOTING, WALL

$P_{DL} = 500\ lb/ft + 1350\ lb/ft + 900\ lb/ft$
$= 2750\ lb/ft$

$P_{LL} = 500\ lb/ft$

$w_u = 1.2 \cdot P_{DL} + 1.6 \cdot P_{LL}$
$= 4100\ lb/ft$

$M_u = w_u \cdot \ell^2/8$
$= 4100\ lb/ft \cdot 8^2/8$
$= 32{,}800\ lb\text{-}ft$

36" FTG. SECTION
(4)-#8

$a = A_s f_y / 0.85 \cdot f_c' \cdot b$
$= (3.14 \cdot 60{,}000\ lb/in^2) / (0.85 \cdot 4000 \cdot 36")$
$= 1.54"$

$\phi M_n = 0.9 \cdot A_s \cdot f_y \cdot (d - a/2)$
$= 0.9 \cdot 3.14\ in^2 \cdot 60{,}000\ lb/in^2 \cdot (33" - 1.5"/2)$
$= 5{,}464{,}920\ lb\text{-}in$
$= 455\ K\text{-}FT$

$\phi M_n \geq M_u$ ✓

# HeliCAP-v2.0 SUMMARY REPORT

**Job Name:** Midland Trace - SCE Analysis

9/15/2010 2:27:03 PM

**Job Number:**

X:\Jobs\2010\10331\HeliCap\Chance-B-102.mdb

**Boring Number:** 102

**Water Table Depth:** None

**No Load Zone:** 1.0 ft

**Application:** Compression

## Capacity Summary

| Pile Number | Helix Depth (ft) | Ult. Helix Bearing Capacity (kips) | Ultimate Recommended Helix Capacity (kips) | Installation Torque (ft-lbs) |
|---|---|---|---|---|
| Number:1 | | | | |
| Product: RS2875.203 | Helix Gr:50 | Thk:1/2" | | |
| Helix Strength: | 50.0 kips | | | |
| Datum Depth:0.0 | Length:28.0 | Angle:90.0 | | |
| Friction Analysis Method: | US Navy | | | |
| Friction Type: Steel | Dia:2.9 | Length:27.5 | | |
| 12" helix | 23.0 | 15.5t<br>15.5c | 15.5t<br>15.5c | |
| 10" helix | 25.5 | 10.7t<br>25.1c | 10.7t<br>25.1c | |
| 8" helix | 27.5 | 20.8t<br>21.8c | 20.8t<br>21.8c | |
| Total Ult. Helix Tension (Qbt\Qht) | | 47.1t | 47.1t | |
| Total Ult. Helix Compression (Qbc\Qhc) | | 62.6c | 62.6c | 5961 |
| Total Ult.Friction(Qf) | | 14.2t/c | 14.2t/c | |
| Total Ult.-Combined Capacity(Qc) | | 76.8c | 76.8c | |

## Soil Profile

| Top of Layer Depth (ft) | Soil Type | Cohesion (psf) | N | Bond Value (psf) | Angle of Internal Friction (Degrees) | Nc \ Nq | In-situ Unit Weight (pcf) | Effect. Unit Weight (pcf) |
|---|---|---|---|---|---|---|---|---|
| 0.0 | 1-Clay Fill | 0 | 0 | . | 0.0 | 9 \ 0 | 70 | 70 |
| 1.0 | 1-Clay Fill | 0 | 0 | . | 0.0 | 9 \ 0 | 70 | 70 |
| 3.0 | Clay | 2250 | 18 | 718 | 0.0 | 9 \ 0 | 116 | 116 |
| 22.0 | Clay | 2250 | 18 | 718 | 0.0 | 9 \ 0 | 116 | 116 |
| 26.0 | Sand | 0 | 22 | 1470 | 33.5 | 0 \ 21 | 112 | 112 |
| 27.5 | Sand | 0 | 22 | 2138 | 33.5 | 0 \ 21 | 112 | 112 |

# HeliCAP-v2.0 SUMMARY REPORT

**Job Name:** Midland Trace - SCE Analysis

9/15/2010 2:27:03 PM

**Job Number:**

X:\Jobs\2010\10331\HeliCap\Chance-B-102.mdb

**Boring Number:** 102

**Water Table Depth:** None

**No Load Zone:** 1.0 ft

**Application:** Compression

| | | | | | | | | | |
|---|---|---|---|---|---|---|---|---|---|
| 50.0 | Clay | 2750 | 22 | 726 | 0.0 | 9 \ | 0 | 120 | 120 |

| REVISIONS | | | | |
|---|---|---|---|---|
| ZONE | REV | DESCRIPTION | DATE | APPROVED |
| | A | REVISED FOR ETI SUBMITTAL | 1/30/04 | RG |

# TITAN HELICAL PRODUCTS

## NEW CONSTRUCTION WALL SECTION w/ HELICAL (ULTIMATE CAPACITY- 85 KIPS)

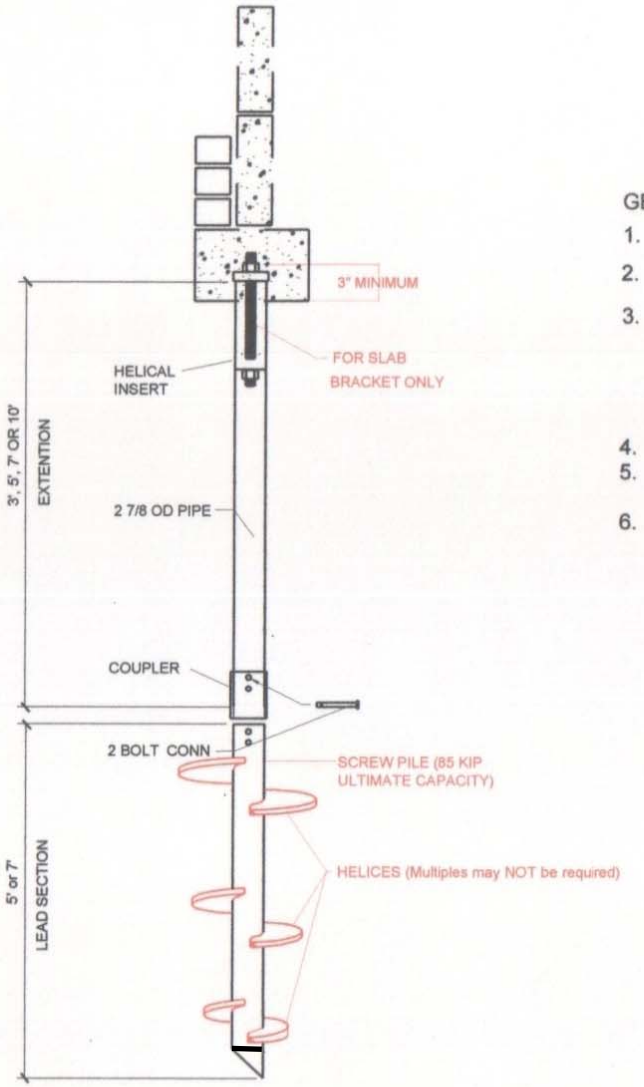


GENERAL NOTES:

1. CONTRACTOR IS RESPONSIBLE FOR: SEQUENCE AND MEANS OF CONSTRUCTION.
2. CONTRACTOR SHALL FIELD VERIFY ALL DIMENSIONS PRIOR TO CONSTRUCTION.
3. TITAN HELICAL PRODUCTS SHALL BE INSTALLED BY A CERTIFIED FASTEEL® SYSTEMS DEALER. USE HELICAL LEAD SECTION AND EXTENSIONS AS REQUIRED FOR THE TOTAL LENGTH, SIZE, AND SOIL CAPACITY.
   THE TITAN HELICAL WILL SUPPORT ULTIMATE LOAD OF 85 KIPS COMPRESSION.
   EACH VERTICAL PIER WILL RESIST LIMITED LATERAL LOAD.
4. SPACING: FOR POURED FOUNDATIONS, SPACING SHALL BE 6'-0" TO 16'-0".
5. THE INSTALLER IS RESPONSIBILE FOR THE CORRECT SCREW PILE IN ACCORDANCE WITH THE SOIL TYPE AND CAPACITY.
6. ASSUMED DEPTH OF EXCAVATION BELOW FINISHED GRADE SHOULD BE CONSULTED WITH A GEOTECHNICAL/ENVIORNMENTAL CONSULTANT, PRIOR TO INSTALLATION.

THIS DRAWING/PRINT IS THE PROPERTY OF FASTEEL SYSTEMS, ANY REPRODUCTION OR USE OF THIS DRAWING/PRINT, WITHOUT THE EXPRESS WRITTEN CONSENT OF FASTEEL SYSTEMS IS PROHIBITED

| | | | | |
|---|---|---|---|---|
| TOLERANCES ± 1/16" UNLESS SPECIFIED ON DRAWING | FASTEEL® SYSTEMS | | | |
| | NEW CONST/SLAB BRACKET | | | |
| DRAWN BY | SIZE A | | PART NO. | REV |
| | SCALE | DATE JULY 02 | SHEET 1 OF 1 | |

# Helical Steel Pier Material Specification

Shaft Material: 2 7/8" O.D.
HSS (2.875"OD x 0.276" wall thickness)

Torque Rating: 8,000 ft. lbs.

Helices: ASTM hot rolled carbon steel with 1/2" or 3/8" thick plate, ASTM A570 structural Grade 50, formed on matching metal dies to a true helical configuration. (See below chart for capacities.)

Couplings: Couplings are cut from 3 1/2" OD schedule 80 A500 grade C pipe .300" wall thickness that is located and welded in place forming consistent strength equivalencies with the shaft.

Fasteners: Two 3/4" diameter ASTM A320 grade 5 or approved equal.

Welding: Performed by certified welders in accordance with AWS D1.1

| Helix Thickness | Helix Diameter | Helix Bearing Area | Single Helix Axial Load Rating (KIPS) |
|---|---|---|---|
| 3/8" | 8" | 0.278 | 61.5 |
| 3/8" | 10" | 0.471 | 45.0 |
| 3/8" | 12" | 0.694 | 31.5 |
| 3/8" | 14" | 0.972 | 24.5 |
| 1/2" | 8" | 0.278 | 72.0 |
| 1/2" | 10" | 0.471 | 54.0 |
| 1/2" | 12" | 0.694 | 45.0 |

Disclaimer: The in-situ axial capacity of a helical pile is dependent on an analysis of the interaction between the helical bearing plates and the site specific soil conditions. Therefore, the ultimate capacity of the pile may be less than the ultimate mechanical rating of the pile. The ultimate capacity may be limited to ultimate torque ratings.

| REVISIONS | | | | |
|---|---|---|---|---|
| ZONE | REV | DESCRIPTION | DATE | APPROVED |
| | A | CHG HOLE DIA AND LOCATION | 7/30/01 | RG |
| | B | CHG TITLE BLOCK | 4/4/02 | RG |
| | C | CHG PIPE DIA./PUNCHING | 9/4/03 | RG |
| | D | CHG PUNCHING | 12/3/04 | RG |

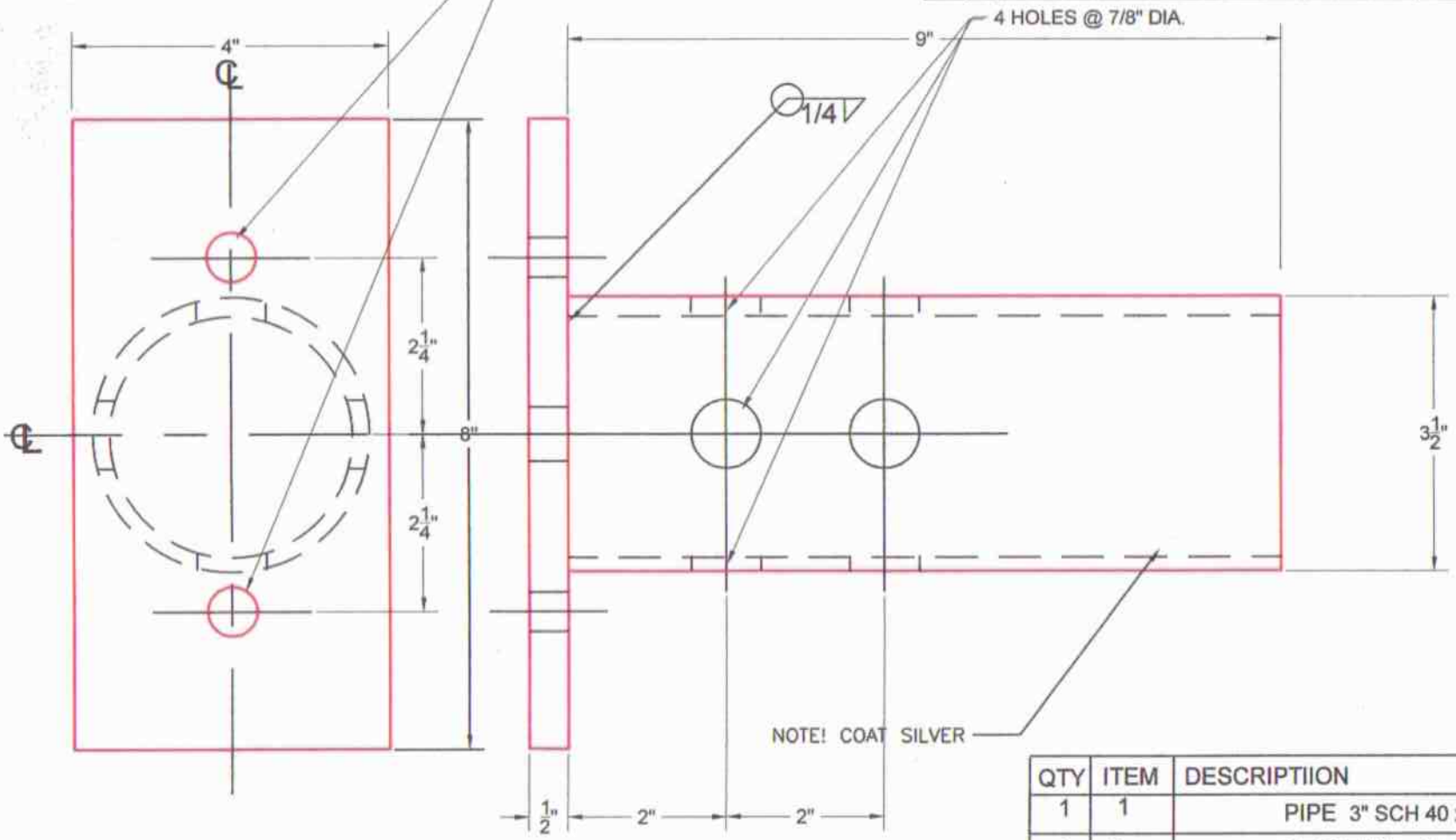


| QTY | ITEM | DESCRIPTIION |
|---|---|---|
| 1 | 1 | PIPE 3" SCH 40 x 0'-9" |
| 1 | 2 | FLAT 1/2" x 4" x 0'8" |

TOLERANCES ± 1/16" UNLESS SPECIFIED ON DRAWING

FASTEEL® SYSTEMS

NEW CONSTRUCTION BRACKET

DRAWN BY RG | SIZE A | PART NO. ETI-0030 | REV

SCALE 1/2 | DATE 30 JULY 01 | SHEET 1 OF 1

THIS DRAWING/PRINT IS THE PROPERTY OF FASTEEL SYSTEMS. ANY REPRODUCTION OR USE OF THIS DRAWING/PRINT, WITHOUT THE EXPRESS WRITTEN CONSENT OF FASTEEL SYSTEMS IS PROHIBITED.

## AXIAL CAPACITY: INSTALLATION TORQUE METHOD

The average torque achieved during the last 3 to 5 feet of their installation is generally proportional to the axial ultimate capacity of helical anchors and foundations. For all practical purposes, this relationship is linear. An anchor installed at 6,000 ft. lbs. will have approximately twice the capacity of the same anchor installed at the same location at 3,000 ft.lbs. This empirical relationship can vary with the shaft diameter and soil properties. Example: For a 1.5" square shaft anchor installed into clay soil with a blow count of 12, we would recommend a Torque Factor of 10. When installed into clay at 2,000 ft.lbs., this anchor would have an estimated ultimate capacity of 20,000 lbs. For this same anchor installed into sand (C = 0), we would generally recommend a Torque Factor of 15. It is interesting to note that the size and quantity of helixes do not significantly effect the Torque Factor (i.e. at a certain torque an anchor will achieve a corresponding capacity regardless of helix configuration.). If subsoil information is unavailable (or if the soil is both clay and sand), we recommend that you assume the soil to be clay. It should be noted that as shaft diameters increase the Torque Factor will decrease. If the shaft diameter of the anchor discussed above was increased to 3.5" diameter, the Torque Factors would be reduced to 7 for clay and 10 for sand. FasFab does not generally recommend the Installation Torque Method for shaft diameters larger than 3.5".

Torque Factors for various anchor configurations and soil properties should be supplied by the manufacturer. It is our experience that the Installation Torque Method (ITM) usually provides conservative results but we recommend field testing to verify or modify the Torque Factor for the particular project. For piles subjected to compression loads, soil data should be reviewed and/or anchor tests conducted so as to verify that the bearing capacity of the soil remains constant or increases in the area beneath the pile.

To facilitate torque monitoring, FasFab recommends the use of a continuous readout torque indicator for hydraulic torque motors. The minimum torsional strength of the 2⅞" helical pipe is 8,000 foot pounds.

The use of shear pins or other torque limiting or pressure relief devices (without continuous readout) is not an accepted or approved method for determining installation torque.

## LATERAL CAPACITY: BROMS' METHOD

To resist lateral loads, the top section of piles may be of a greater diameter than the bottom section which increases the lateral capacity of the pile.

FasFab utilizes Broms' method to determine the ultimate lateral resistance of the type of piles discussed here. These piles are classified as "Unrestrained or Free-Head Short Rigid Piles". Broms' method is generally considered to be a reliable method of predicting lateral capacity of these piles. We recommend that the engineer familiarize himself/herself with the following articles:

Bengt B. Broms, "Lateral Resistance of Piles in Cohesionless Soils", Proceedings of the American Society of Civil Engineers, Journal of the Soil Mechanics and Foundations Division, May 1964.

Bengt B. Broms, "Lateral Resistance of Piles in Cohesive Soils", Proceedings of the American Society of Civil Engineers, Journal of the Soil Mechanics and Foundations Division, May 1964.

For "short"piles, the lateral capacity is totally dependent on the soil resistance, while "long" piles are dependent on the yield moment of the pile itself.

Broms' theory can be easily demonstrated by a shear/moment diagram for either "cohesive" or "cohesionless" soils. A simple statical solution of these diagrams will yield the required embedment depth and shaft diameter of the top section to resist the specified lateral load. In addition, the maximum bending moment of the top section can be readily determined. For cohesive soils, Broms' method should be limited to pile diameters of 12.75" or less. For cohesionless soils, Broms'
method does not seem to be limited. The following reaction/shear/moment diagrams are enclosed here.

1. Drawing No. 921102 Cohesive Soils
2. Drawing No. 940331-T Cohesionless Soils

## IBM COMPATIBLE SOFTWARE

To facilitate the design and selection of helical anchors and foundations discussed here, FasFab has developed the following specialized (stand alone) DOS software to assist the engineer. These programs are extremely "user friendly" and will run on any IBM compatible computer. Results are read directly from the screen and complete calculation reports may be printed. Programs automatically accommodate virtually all types of printers, including laser, dot matrix and bubble jet.

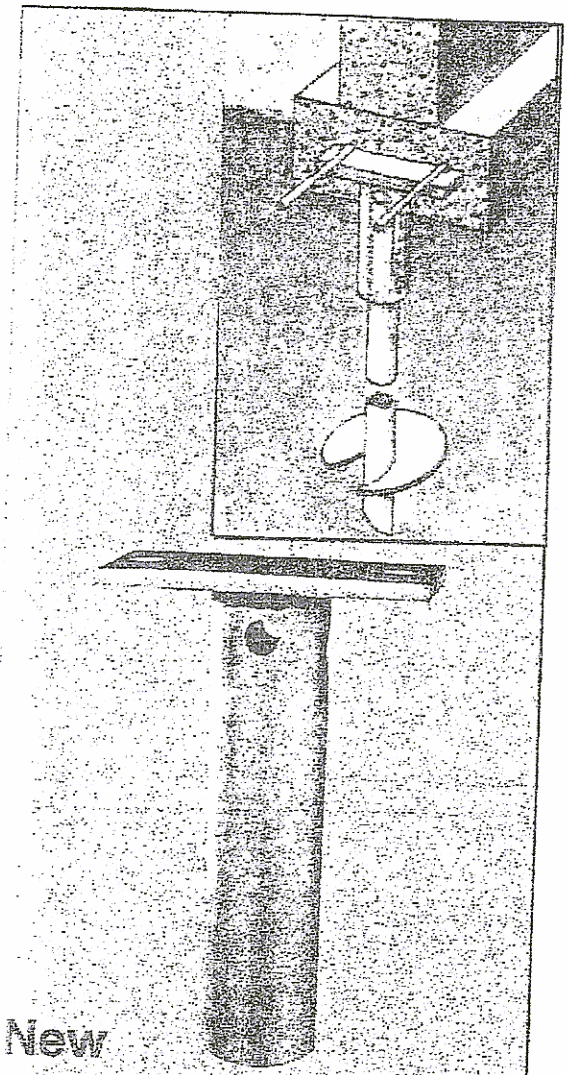

## New Construction Bracket

For support of new structures. Placed in piers installed between footing forms and tied to reinforcing bars before pouring concrete.

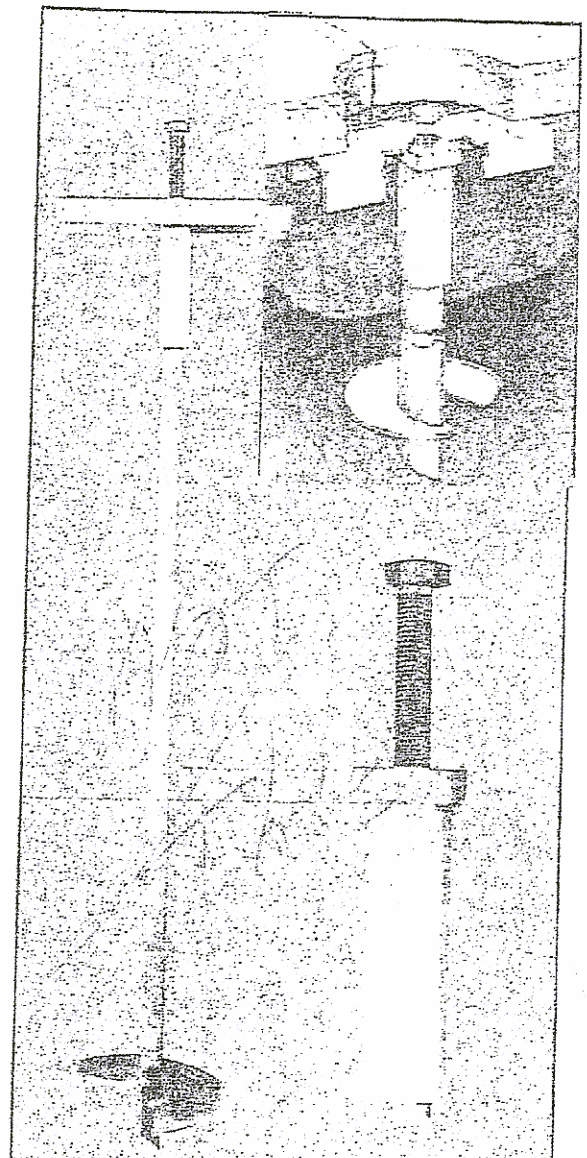

## Slab Bracket

For stabilizing uneven or damaged floors. Bolt adjusts through cap fitting on top of pier so channel lifts floor.

EASTEEL® SYSTEMS

483 S. Kirkwood Rd., #58
St. Louis, MO 63122

1-877-966-3077

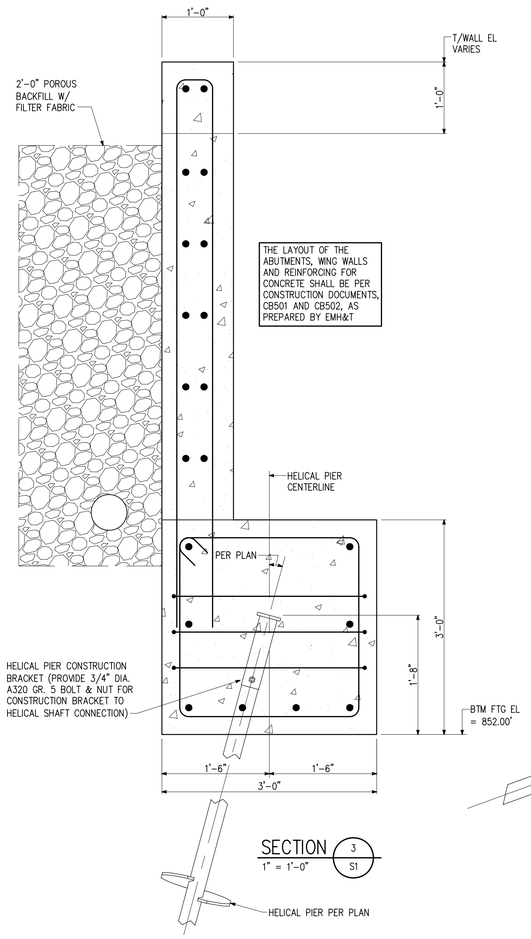


SECTION 3 / S1
1" = 1'-0"

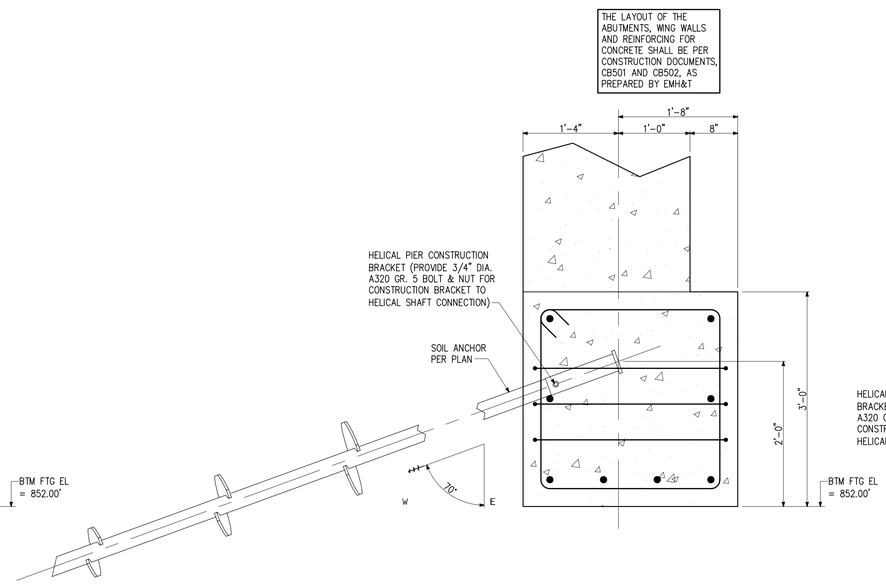


SECTION 2 / S1
1" = 1'-0"

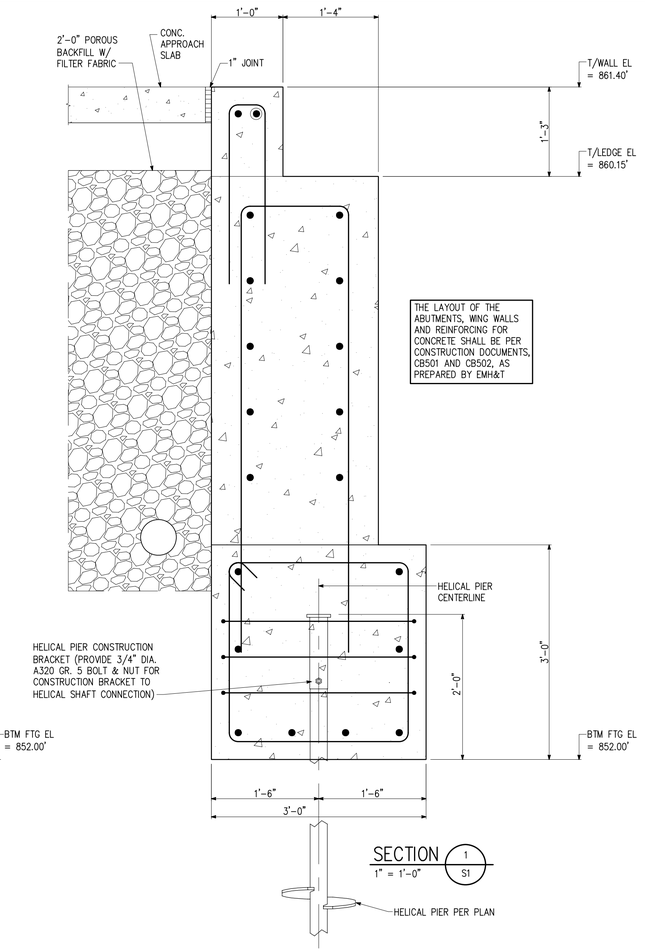


SECTION 1 / S1
1" = 1'-0"

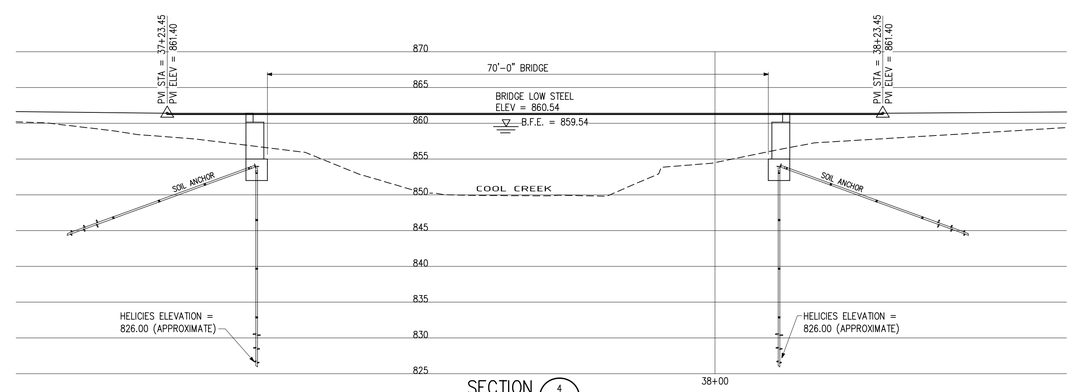


SECTION 4 / S1
1" = 10'-0"


Silver Creek Engineering, Inc.
7225 WOODLAND DRIVE
SUITE 200
INDIANAPOLIS, INDIANA 46278
(317)-297-5610
FAX (317)-297-2942
www.scenfdg.com


CERTIFIED BY :

SCOTT J. SZENTES
REGISTERED
No. 10606543
STATE OF INDIANA
PROFESSIONAL ENGINEER

PROJECT FOR
ACCULEVEL
9495 NORTH WALDRON ROAD
ROSSVILLE, INDIANA 46065

REVISIONS

| NO. | DATE | REMARKS |
|---|---|---|
| | | |

| | |
|---|---|
| DRAWN BY : SJS | DESIGNED BY : SJS |
| CHECKED BY : GPS | DATE : 09-21-10 |
| SCE JOB NO. 10331 | SCALE AS NOTED |

DRAWING TITLE
MIDLAND TRACE TRAIL - EAST LEG PHASE 2
WESTFIELD, INDIANA
HELICAL PIER FOUNDATION SECTIONS

SHEET NUMBER
S2

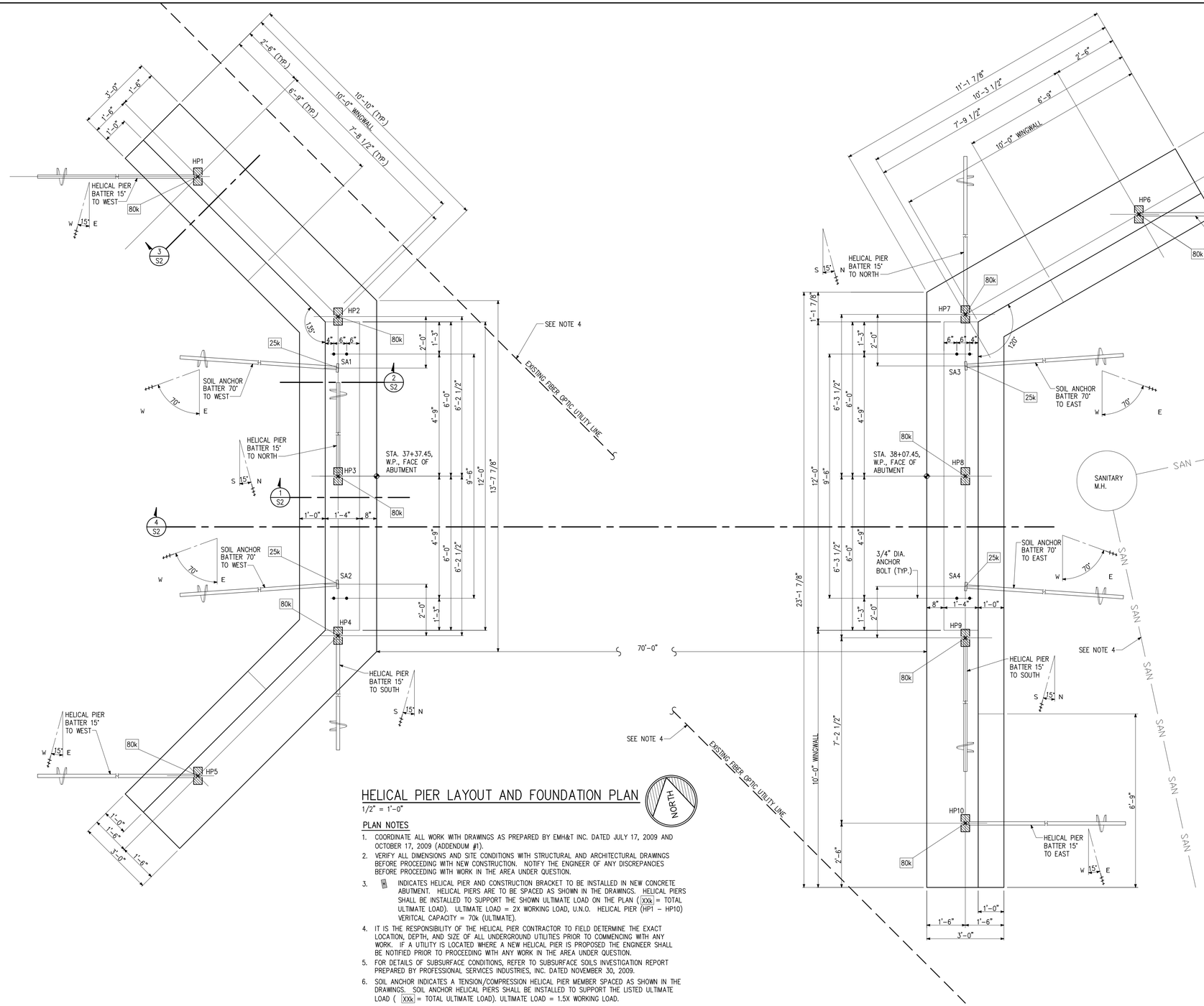


## HELICAL PIER LAYOUT AND FOUNDATION PLAN

1/2" = 1'-0"

### PLAN NOTES

1. COORDINATE ALL WORK WITH DRAWINGS AS PREPARED BY EMH&T INC. DATED JULY 17, 2009 AND OCTOBER 17, 2009 (ADDENDUM #1).
2. VERIFY ALL DIMENSIONS AND SITE CONDITIONS WITH STRUCTURAL AND ARCHITECTURAL DRAWINGS BEFORE PROCEEDING WITH NEW CONSTRUCTION. NOTIFY THE ENGINEER OF ANY DISCREPANCIES BEFORE PROCEEDING WITH WORK IN THE AREA UNDER QUESTION.
3. INDICATES HELICAL PIER AND CONSTRUCTION BRACKET TO BE INSTALLED IN NEW CONCRETE ABUTMENT. HELICAL PIERS ARE TO BE SPACED AS SHOWN IN THE DRAWINGS. HELICAL PIERS SHALL BE INSTALLED TO SUPPORT THE SHOWN ULTIMATE LOAD ON THE PLAN ( XXk = TOTAL ULTIMATE LOAD). ULTIMATE LOAD = 2X WORKING LOAD, U.N.O. HELICAL PIER (HP1 – HP10) VERITCAL CAPACITY = 70k (ULTIMATE).
4. IT IS THE RESPONSIBILITY OF THE HELICAL PIER CONTRACTOR TO FIELD DETERMINE THE EXACT LOCATION, DEPTH, AND SIZE OF ALL UNDERGROUND UTILITIES PRIOR TO COMMENCING WITH ANY WORK. IF A UTILITY IS LOCATED WHERE A NEW HELICAL PIER IS PROPOSED THE ENGINEER SHALL BE NOTIFIED PRIOR TO PROCEEDING WITH ANY WORK IN THE AREA UNDER QUESTION.
5. FOR DETAILS OF SUBSURFACE CONDITIONS, REFER TO SUBSURFACE SOILS INVESTIGATION REPORT PREPARED BY PROFESSIONAL SERVICES INDUSTRIES, INC. DATED NOVEMBER 30, 2009.
6. SOIL ANCHOR INDICATES A TENSION/COMPRESSION HELICAL PIER MEMBER SPACED AS SHOWN IN THE DRAWINGS. SOIL ANCHOR HELICAL PIERS SHALL BE INSTALLED TO SUPPORT THE LISTED ULTIMATE LOAD ( XXk = TOTAL ULTIMATE LOAD). ULTIMATE LOAD = 1.5X WORKING LOAD.


Silver Creek Engineering, LLC
7225 WOODLAND DRIVE
SUITE 200
INDIANAPOLIS, INDIANA 46278
(317)-297-5610
FAX (317)-297-2942
www.scenlcg.com


CERTIFIED BY :

SCOTT J. SZENTES REGISTERED No. 10606543 STATE OF INDIANA PROFESSIONAL ENGINEER

9-21-10

PROJECT FOR
ACCULEVEL
9495 NORTH WALDRON ROAD
ROSSVILLE, INDIANA 46065

| NO. | DATE | REVISIONS REMARKS |
|---|---|---|
| | | |

| | |
|---|---|
| DRAWN BY : SJS | DESIGNED BY : SJS |
| CHECKED BY : GPS | DATE : 09-21-10 |
| SCE JOB NO. 10331 | SCALE AS NOTED |

DRAWING TITLE
MIDLAND TRACE TRAIL - EAST LEG PHASE 2
WESTFIELD, INDIANA
HELICAL PIER FOUNDATION PLAN

SHEET NUMBER
S1