StorAmerica

Developed by:

Real America Development, LLC
111 North Rangeline Road
Carmel, Indiana 46032
Phone: (317) 815-5929
Contact Person: Ronda Shrewsbury

LOCATION MAP
SCALE: 1" =800'

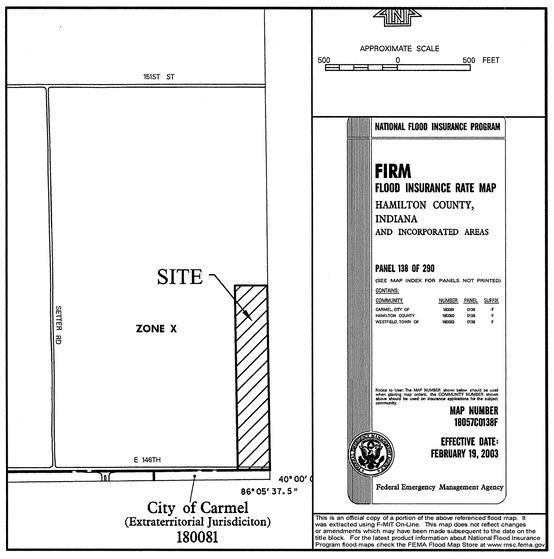

Flood Map
(NOT TO SCALE)

INDEX

SHT.	DESCRIPTION
C001	COVER SHEET
C100–C102	TOPOGRAPHICAL SURVEY
C200–C206	SITE PLAN / SITE DEVELOPMENT PLANS/POND EMERGENCY FLOOD ROUTE
C300–C310	STORMWATER POLLUTION & PREVENTION PLAN & SPECIFICATIONS SEC 4. STORMWATER POLLUTION & PREVENTION PLAN & SPECIFICATIONS
C400–C403	STREET PLAN & PROFILES/ENTRANCE PLAN
C500–C501	FORCE MAIN PLAN & PROFILES/FORCE MAIN SPECS
C600–C602	STORM SEWER PLAN & PROFILES & SSD PLAN
C700–C701	WATER PLAN / WATER DETAILS
C800–C804	CONSTRUCTION DETAILS & SPECIFICATIONS
C900–C901	LANDSCAPE PLAN/LIGHTING PLAN

REVISIONS

SHT.	DESCRIPTION
ALL	REVISED PER TAC COMMENTS 3/3/11 KRG
C205–C206 C300–C310 C500,C600–C602 C700	REVISED PER COMMENTS 3/17/11 KRG

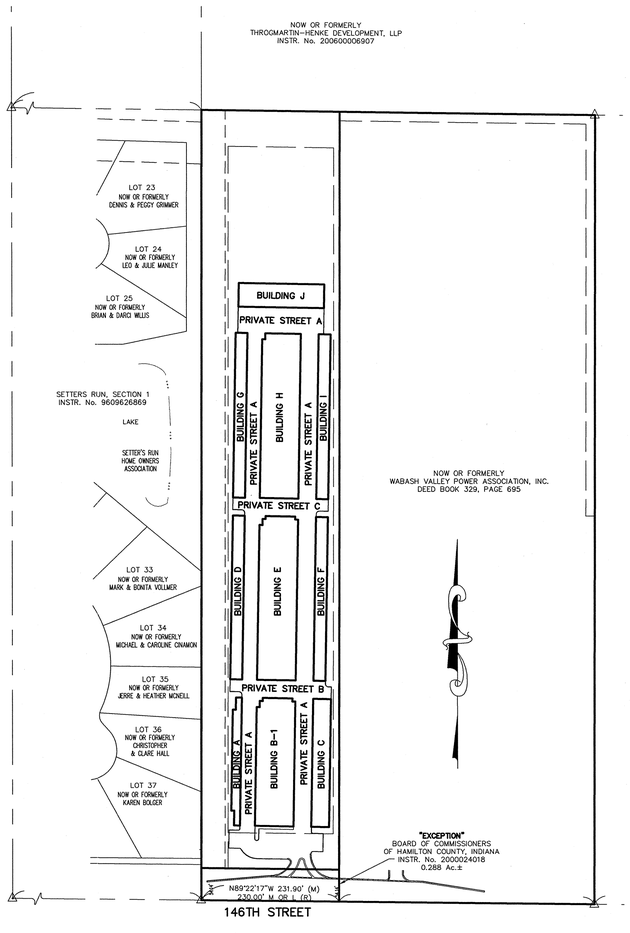

Site Map
SCALE: 1" = 120'

WARRANTY DEED - Instrument No. 200100004809

A part of the West Half of the Southeast Quarter of the Southeast Quarter of Section 17, Township 18 North, Range 4 East, being more particularly described as follows:

Beginning at the Southwest corner of the Southeast Quarter of the Southeast Quarter of Section 17, Township 18 North, Range 4 East; thence northerly on the West line of said Quarter-Quarter a distance of 1320 feet, more or less to the Northwest corner of said Quarter-Quarter; thence easterly on the North line of said Quarter-Quarter a distance of 230 feet, more or less, to the Northwest corner of the real estate described in Deed Book 329, Page 695 (Carmel 146th Street Substation) in the Office of the Recorder of Hamilton County, Indiana; thence southerly on the West line of said real estate a distance of 1320 feet, more or less, to the Southwest corner of said real estate, said point also being on the South line of said Quarter-Quarter; thence westerly on said South line a distance of 230 feet, more or less, to the point of beginning, containing 7 acres, more or less.

EXCEPT:

A part of the Southeast Quarter of the Southeast Quarter of Section 17, Township 18 North, Range 4 East, Hamilton County, Indiana, and being that part of the grantor's land lying within the right-of-way line depicted on the attached Right-of-Way Parcel Plat, marked Exhibit "A" in Instrument recorded as Instrument Number 2000-024018, in the Office of the Recorder of Hamilton County, Indiana, described as follows:

Beginning at the Southwest corner of said Quarter-Quarter Section; thence North 00 degrees 08 minutes 41 seconds East 16.501 meters (54.14 feet) along the West line of said Quarter-Quarter Section to point "401" designated on plat recorded as Instrument Number 2000-024081, in the Office of the Recorder of Hamilton County, Indiana; thence parallel to the South line of said Quarter-Quarter Section South 89 degrees 22 minutes 12 seconds East 70.694 meters (231.94 feet) to point "402" designated on plat recorded as Instrument Number 2000-024081, in the Office of the Recorder of Hamilton County, Indiana and the East line of the grantor's land; thence South 00 degrees 09 minutes 37 seconds West 16.501 meters (54.14 feet) along said East line to the South line of said Quarter-Quarter Section; thence North 89 degrees 22 minutes 12 seconds West 70.690 meters (231.92 feet) to the point of beginning and containing 0.1166 hectares (0.288 acres), more or less, inclusive of the presently existing right-of-way which contains 0.0355 hectares (0.088 acres), more or less.

BENCHMARK:

Hamilton County Benchmark #55 - Bronze plug in 18" tall 10" x 10" concrete post, 14 feet North of Northeast wingwall, 6 feet East of East edge of pavement on Oak Road, 40 feet ± North of centerline of Cool Creek.

ELEVATION = 810.10 (NAVD '88)

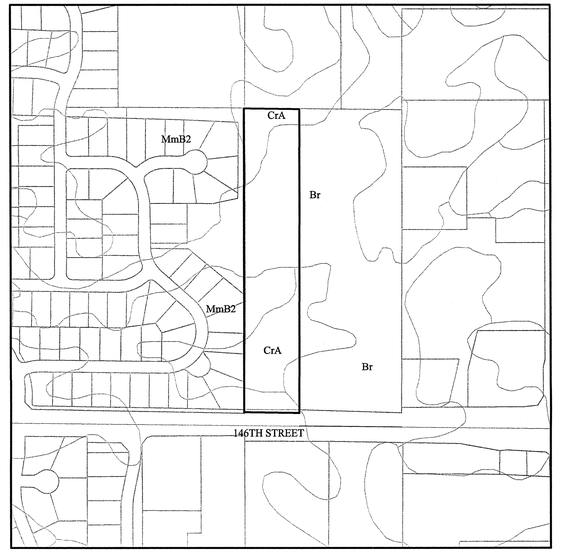

SOILS MAP
SCALE: 1" =300'

Br: Brookston silty clay loam- this soil is dark colored, silty in texture and on depressional uplands. It is deep and very poorly drained with moderate permeability. It has high available water for plant growth and high organic matter content. It has compact till starting at a depth of 40 to 60 inches. The main soil features that affect the urban development uses are seasonal high water table, high potential frost action, moderate shrink-swell potential, moderate permeability and ponded surface water. Because of these engineering limitations this site will be constructed as follows. Maple Village, Section Three, being a singlefamily development within the jurisdiction of The City of Westfield and Hamilton County will have to abide by the current Subdivision Control Ordinance. This ordinance requires that we have an artificially drained site and that the buildings within this development be well above the 100yr elevation of the proposed detention basins and therefore be protected from flooding. All buildings will be of large slab type construction. In cases where a high water table is present special footings shall be constructed. All roads will have adequate sub-base. All sanitary sewers shall be public and therefore no septic systems shall be allowed Crosby silt loam, 0-3 percent slopes- this soil is light colored, silty in texture and on sloping uplands. It is deep and somewhat

CrA: poorly drained with slow permeability. It has high available water for plant growth and medium organic matter content. The soil has compact till starting at a depth between 20 -40 inches. The main soil features that affect urban development uses are seasonal high water table, moderate shrink-swell potential, high potential frost action and slow permeability. Because of these engineering limitations this site will be constructed as follows. Maple Village, Section Three, being a singlefamily development within the jurisdiction of The City of Westfield and Hamilton County will have to abide by the current Subdivision Control Ordinance. This ordinance requires that we have an artificially drained site and that the buildings within this development be well above the 100yr elevation of the proposed detention basins and therefore be protected from flooding. All buildings will be of large slab type construction. In cases where a high water table is present special footings shall be constructed. All roads will have adequate sub-base. All sanitary sewers shall be public and therefore no septic systems shall be allowed

MmB2: Miami silt loam, 2 to 6 percent slopes, eroded This moderately well drained soil has a seasonal high watertable at 2.0 to 3.5 ft. and is onsideslopes and rises on uplands. Slopes are 2 to 6 percent. the native vegetation is hardwoods. The surface layer is silt loam and has moderately loworganic matter content (1.0 to 2.0 percent). Permeability is very slow (<0.06 in/hr) in the most restrictive layer above 60 inches. Available water capacity islow (5.9 inches in the upper 60 inches). The pH of the surface layer in non-limed areas is 5.1 to 6.0. Droughtiness and water erosion are management concerns for crop production.

INDIANA DEPARTMENT OF TRANSPORTATION STANDARD SPECIFICATIONS LATEST EDITION TO BE USED WITH THESE PLANS UNLESS ALTERNATE SPECIFICATIONS ARE SHOWN WITHIN.

WESTFIELD CONSTRUCTION STANDARD DETAILS AND SPECIFICATIONS LATEST EDITIONS TO BE USED WITH THESE PLANS.

DESIGN DATA

TOTAL ACREAGE = 7.07 Ac.±

BLDGS. A,C,F,D,I,G&J	169 UNITS	36,410 Sq.Ft.
BLDG. B (2 STORY)	190 UNITS	27,700 Sq.Ft.
BLDG. E&H (PHASE 2)	356 UNITS	35,575 Sq.Ft.
TOTAL	715 UNITS	99,685 Sq.Ft.
PRIVATE STREET A	2,035.21 L.F.	
PRIVATE STREET B	92.50 L.F.	
PRIVATE STREET C	92.50 L.F.	
TOTAL	2,220.21 L.F.	

PLANS PREPARED BY:
STOEPPELWERTH & ASSOCIATES, INC.
CONSULTING ENGINEERS & LAND SURVEYORS
7965 E. 106TH STREET, FISHERS, INDIANA 46038 PHONE: (317)-849-5935
FAX: (317)-849-5942
CONTACT PERSON: BRIAN K ROBINSON

PLANS CERTIFIED BY:

JAMES O. RINEHART, IV — DATE 01/27/11
PROFESSIONAL ENGINEER
NO. 10200495

JAMES O. RINEHART, IV
REGISTERED
No. 10200495
STATE OF INDIANA
PROFESSIONAL ENGINEER

MATCH LINE "A"

SWALE W/ RIPRAP

7' CHAINLINK FENCE

GUARD RAIL

EDGE OF STONE

NOW OR FORMERLY
WABASH VALLEY POWER ASSOCIATION, INC.
DEED BOOK 329, PAGE 695

INTERMITTENT WOVEN WIRE FENCE

4' BOARD FENCE

WOVEN WIRE FENCE

CONTRACTOR TO REMOVE EXISTING FENCES

CONTRACTOR TO REMOVE EXISTING CONCRETE AND PRIVACY FENCE

4' PICKET FENCE

16'X36.3' WOOD/BLOCK STORAGE BLDG.

CONTRACTOR TO REMOVE EXISTING BUILDING

CONTRACTOR TO REMOVE EXISTING LIGHT POLE

CONTRACTOR TO REMOVE EXISTING ELECTRIC LINE, POWER POLE, AND CABLE T.V.

CONTRACTOR TO REMOVE EXISTING SIDEWALK AND CONCRETE

CONTRACTOR TO REMOVE EXISTING TREES

CONTRACTOR TO REMOVE EXISTING FENCE

CONTRACTOR TO REMOVE EXISTING STONE DRIVE.

CONTRACTOR TO INSTALL SNOW FENCE TO PROTECT EXISTING TREES

CONTRACTOR TO PROTECT EXISTING TREES

CONTRACTOR TO REMOVE EXISTING WOOD CARPORT.

16'X20' WOOD CARPORT

CONTRACTOR TO REMOVE EXISTING VALLY CURB AND REPLACE WITH 8" CHAIRBACK CURB.

CONTRACTOR TO REMOVE EXISTING CONCRETE ENTRANCE.

15' WATERLINE EASEMENT IN FAVOR OF THE TOWN OF FISHERS INST. NO. 2005R023745

146TH STREET

WOODED

GRASS

PARTIALLY BURIED CONCRETE

STONE DRIVE

STONE WORK

CMP

CTV

WATER VALVE & HYDRANT

CHAINLINK CORNER

LOT 34
NOW OR FORMERLY
& CAROLINE CINAMON

LOT 35
NOW OR FORMERLY
JERRE & HEATHER MCNEILL

LOT 36
NOW OR FORMERLY
CHRISTOPHER & CLARE HALL

LOT 37
NOW OR FORMERLY
KAREN BOLGER

MATCH LINE "A"

GRAPHIC SCALE

20 0 10 20

(IN FEET)
1 inch = 20 ft.

LEGEND

- FLOW LINE
- E — OVERHEAD ELECTRIC LINES
- CTV — CABLE T.V. LINE
- STORM SEWER LINE; MANHOLE & EX/DESCTION
- CURB INLET
- BEEHIVE OR ROUND INLET
- FENCE LINE
- P.W.P. POWER POLE
- LIGHT POLE
- GUY WIRE
- T.P. TELEPHONE PEDESTAL
- WATER VALVE
- FIRE HYDRANT
- M.B. MAILBOX

BENCHMARK:

Hamilton County Benchmark #55 - Bronze plug in 18" tall 10" x 10" concrete post, 14 feet North of Northeast wingwall, 6 feet East of East edge of pavement on Oak Road, 40 feet ± North of centerline of Cool Creek.

ELEVATION = 810.10 (NAVD '88)

UTILITY CROSSINGS

CONTRACTOR SHALL VERIFY LOCATION AND DEPTH OF ALL EXISTING UTILITIES PRIOR TO CONSTRUCTION TO CONFIRM THERE ARE NO CROSSING CONFLICTS. CONFLICTS THAT ARE DISCOVERED AFTER CONSTRUCTION BEGINS ARE SOLELY THE CONTRACTORS RESPONSIBILITY.

HOLEY MOLEY SAYS
"DIG SAFELY"

"IT'S THE LAW"
CALL 2 WORKING DAYS BEFORE YOU DIG.
1-800-382-5544
CALL TOLL FREE
PER INDIANA STATE LAW IC8-1-26, IT IS AGAINST THE LAW TO EXCAVATE WITHOUT NOTIFYING THE UNDERGROUND LOCATION SERVICE TWO (2) WORKING DAYS BEFORE COMMENCING WORK.

CAUTION

LOCATION OF ALL EXISTING UNDERGROUND UTILITIES SHOWN ON THIS PLAN ARE BASED UPON ABOVE GROUND EVIDENCE. (including, but not limited to, manholes, inlets, valves, & marks made upon the ground by others.) AND ARE SPECULATIVE IN NATURE. THERE MAY ALSO BE OTHER EXISTING UNDERGROUND UTILITIES FOR WHICH THERE IS NO ABOVE GROUND EVIDENCE OR FOR WHICH NO ABOVE GROUND EVIDENCE WAS OBSERVED. THE EXACT LOCATIONS OF SAID EXISTING UNDERGROUND UTILITIES SHOULD BE VERIFIED BY THE CONTRACTOR PRIOR TO ANY AND ALL CONSTRUCTION.

DATE	MARK	REVISIONS	BY

JAMES O. RINEHART IV
REGISTERED
No. 10200495
STATE OF INDIANA
PROFESSIONAL ENGINEER

CERTIFIED: 1/27/11

STOEPPELWERTH & ASSOCIATES, INC.
CONSULTING ENGINEERS & LAND SURVEYORS
7965 East 106th Street, Fishers, IN 46038-2005
Phone: (317) 849-5935 Fax: (317) 849-5942
Toll Free: (800) 728-6917

TOPOGRAPHICAL SURVEY
STORAMERICA

HAMILTON COUNTY, INDIANA
WESTFIELD

DRAWN BY: KRG | CHECKED BY: BKR

SHEET NO. C100

S & A JOB NO. 59815RAD

S:\59815RD\Dwg\C100-TOPO.dwg, Layout1, 3/3/2011 2:28:03 PM, KRGtech 1:1

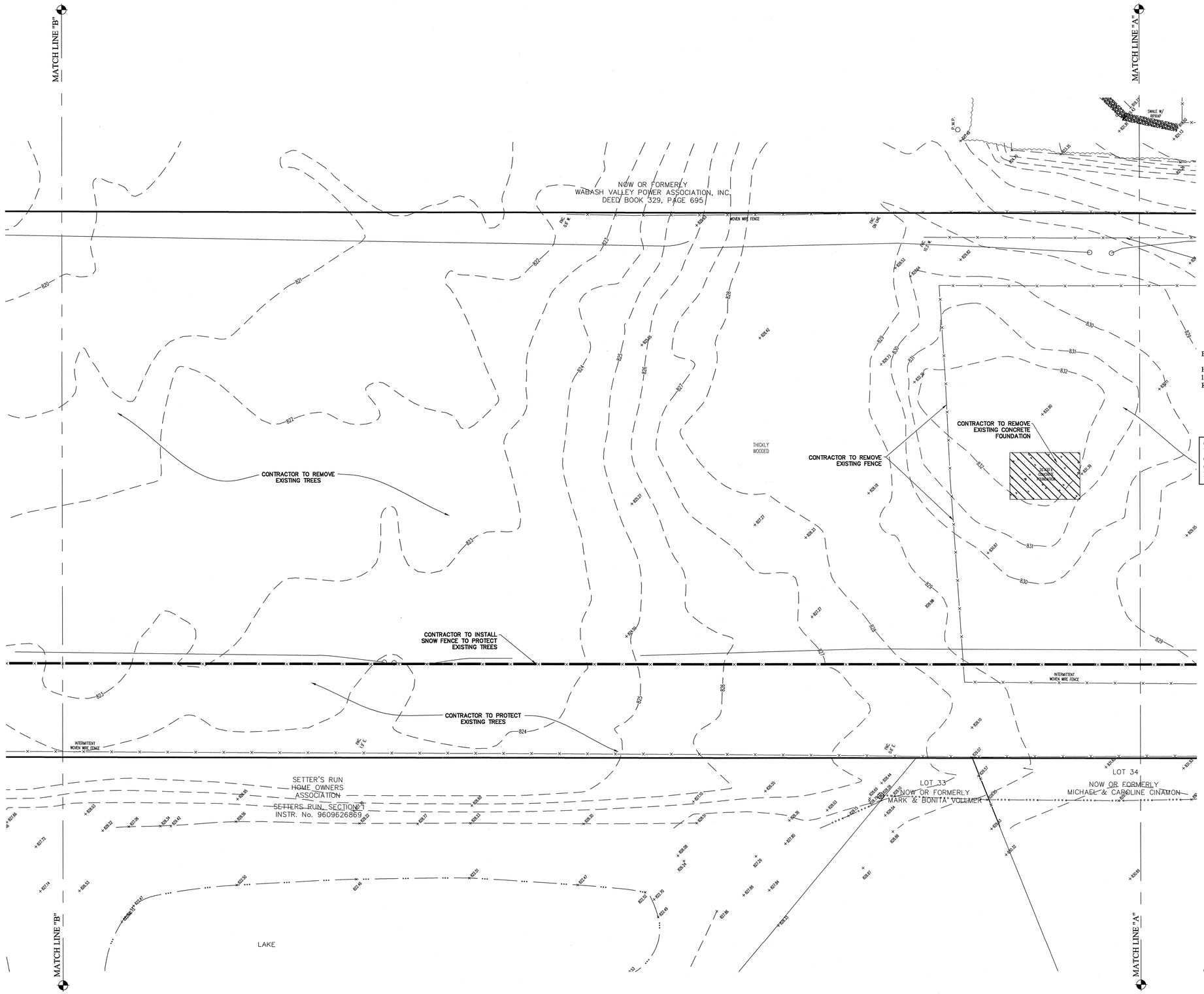

GRAPHIC SCALE

20 0 10 20

(IN FEET)
1 inch = 20 ft.

LEGEND

FENCE LINE

BENCHMARK:

Hamilton County Benchmark #55 - Bronze plug in 18" tall 10" x 10" concrete post, 14 feet North of Northeast wingwall, 6 feet East of East edge of pavement on Oak Road, 40 feet ± North of centerline of Cool Creek.

ELEVATION = 810.10 (NAVD '88)

UTILITY CROSSINGS

CONTRACTOR SHALL VERIFY LOCATION AND DEPTH OF ALL EXISTING UTILITIES PRIOR TO CONSTRUCTION TO CONFIRM THERE ARE NO CROSSING CONFLICTS. CONFLICTS THAT ARE DISCOVERED AFTER CONSTRUCTION BEGINS ARE SOLELY THE CONTRACTOR'S RESPONSIBILITY.

HOLEY MOLEY SAYS
"DIG SAFELY"

"IT'S THE LAW"
CALL 2 WORKING DAYS BEFORE YOU DIG
1-800-382-5544
CALL TOLL FREE
PER INDIANA STATE LAW IC8-1-26.
IT IS AGAINST THE LAW TO EXCAVATE WITHOUT NOTIFYING THE UNDERGROUND LOCATION SERVICE TWO (2) WORKING DAYS BEFORE COMMENCING WORK.

CAUTION

LOCATION OF ALL EXISTING UNDERGROUND UTILITIES SHOWN ON THIS PLAN ARE BASED UPON ABOVE GROUND EVIDENCE. (including, but not limited to, manholes, inlets, valves, & marks made upon the ground by others.) AND ARE SPECULATIVE IN NATURE. THERE MAY ALSO BE OTHER EXISTING UNDERGROUND UTILITIES FOR WHICH THERE IS NO ABOVE GROUND EVIDENCE OR FOR WHICH NO ABOVE GROUND EVIDENCE WAS OBSERVED. THE EXACT LOCATIONS OF SAID EXISTING UNDERGROUND UTILITIES SHOULD BE VERIFIED BY THE CONTRACTOR PRIOR TO ANY AND ALL CONSTRUCTION.

DATE	MARK	REVISIONS	BY

JAMES O. RINEHART IV
REGISTERED
No. 10200495
STATE OF INDIANA
PROFESSIONAL ENGINEER

CERTIFIED: 1/27/11

STOEPPELWERTH & ASSOCIATES, INC.
CONSULTING ENGINEERS & LAND SURVEYORS
7965 East 106th Street, Fishers, IN 46038-2005
Phone: (317) 849-5935 Fax: (317) 849-5942
Toll Free: (800) 728-6917

TOPOGRAPHICAL SURVEY
STORAMERICA

HAMILTON COUNTY, INDIANA

WESTFIELD

DRAWN BY:	CHECKED BY:
KRG	BKR

SHEET NO.
C101

S & A JOB NO.
59815RAD

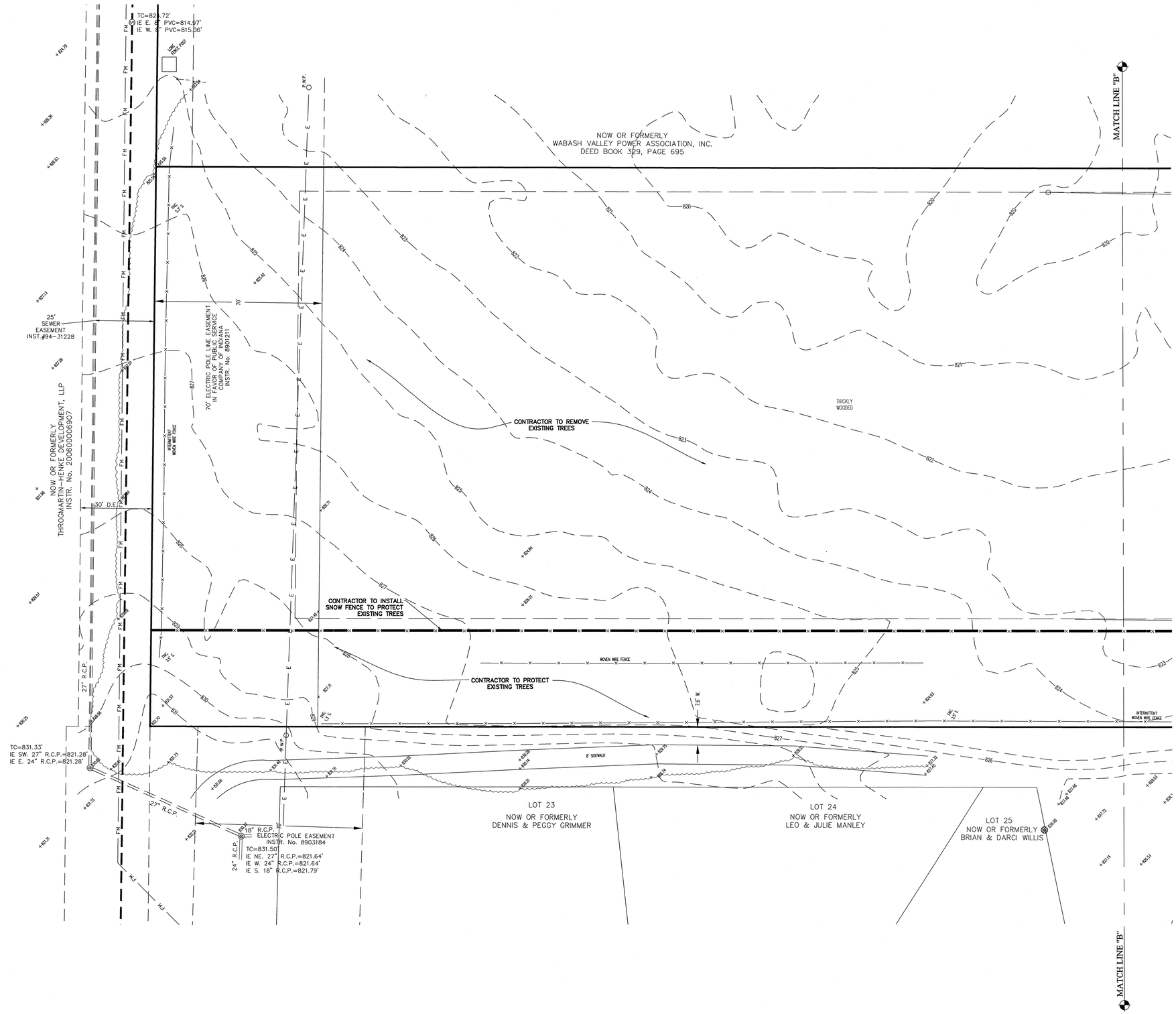

GRAPHIC SCALE

20 0 10 20

(IN FEET)
1 inch = 20 ft.

LEGEND

- FLOW LINE
- OVERHEAD ELECTRIC LINES
- SANITARY SEWER LINE; MANHOLE
- STORM SEWER LINE; MANHOLE & ENDSECTION
- FENCE LINE
- POWER POLE
- GUY WIRE

BENCHMARK:

Hamilton County Benchmark #55 - Bronze plug in 18" tall 10" x 10" concrete post, 14 feet North of Northeast wingwall, 6 feet East of East edge of pavement on Oak Road, 40 feet ± North of centerline of Cool Creek.

ELEVATION = 810.10 (NAVD '88)

UTILITY CROSSINGS

CONTRACTOR SHALL VERIFY LOCATION AND DEPTH OF ALL EXISTING UTILITIES PRIOR TO CONSTRUCTION TO CONFIRM THERE ARE NO CROSSING CONFLICTS. CONFLICTS THAT ARE DISCOVERED AFTER CONSTRUCTION BEGINS ARE SOLELY THE CONTRACTOR'S RESPONSIBILITY.

HOLEY MOLEY SAYS
"DIG SAFELY"

"IT'S THE LAW"
CALL 2 WORKING DAYS BEFORE YOU DIG
1-800-382-5544
CALL TOLL FREE
PER INDIANA STATE LAW IC8-1-26.
IT IS AGAINST THE LAW TO EXCAVATE WITHOUT NOTIFYING THE UNDERGROUND LOCATION SERVICE TWO (2) WORKING DAYS BEFORE COMMENCING WORK.

CAUTION

LOCATION OF ALL EXISTING UNDERGROUND UTILITIES SHOWN ON THIS PLAN ARE BASED UPON ABOVE GROUND EVIDENCE. (including, but not limited to, manholes, inlets, valves, & marks made upon the ground by others.) AND ARE SPECULATIVE IN NATURE. THERE MAY ALSO BE OTHER EXISTING UNDERGROUND UTILITIES FOR WHICH THERE IS NO ABOVE GROUND EVIDENCE OR FOR WHICH NO ABOVE GROUND EVIDENCE WAS OBSERVED. THE EXACT LOCATIONS OF SAID EXISTING UNDERGROUND UTILITIES SHOULD BE VERIFIED BY THE CONTRACTOR PRIOR TO ANY AND ALL CONSTRUCTION.

DATE	MARK	REVISIONS	BY

JAMES O. RINEHART IV
REGISTERED
No. 10200495
STATE OF INDIANA
PROFESSIONAL ENGINEER

CERTIFIED: 1/27/11

STOEPPELWERTH & ASSOCIATES, INC.
CONSULTING ENGINEERS & LAND SURVEYORS
7965 East 106th Street, Fishers, IN 46038-2005
Phone: (317) 849-5935 Fax: (317) 849-5942
Toll Free: (800) 728-6917

TOPOGRAPHICAL SURVEY
STORAMERICA

HAMILTON COUNTY, INDIANA

WESTFIELD

DRAWN BY:	CHECKED BY:
KRG	BKR

SHEET NO.
C102

S & A JOB NO.
59815RAD

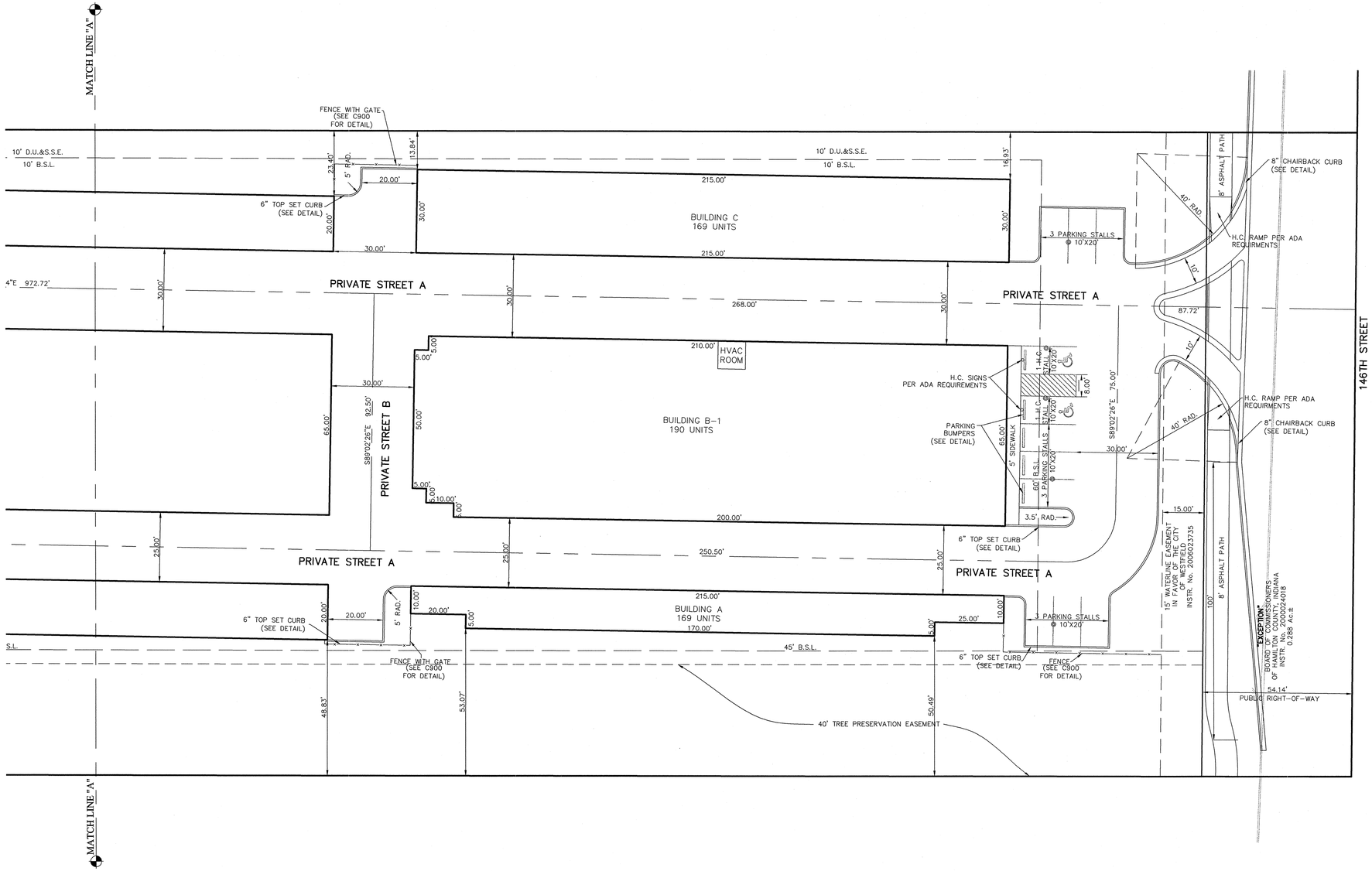

GRAPHIC SCALE

20 0 10 20

(IN FEET)
1 inch = 20 ft.

LEGEND

B.S.L.	Building setback line
D&U.E.	Drainage & utility easement
RAD.	Radius
H.C.	Handicap

BENCHMARK:

Hamilton County Benchmark #55 - Bronze plug in 18" tall 10" x 10" concrete post, 14 feet North of Northeast wingwall, 6 feet East of East edge of pavement on Oak Road, 40 feet ± North of centerline of Cool Creek.

ELEVATION = 810.10 (NAVD '88)

RABCO UNIT MIX COUNT

JOB: LU-10-K-1345 DATE: 12/18/2010

BLDG B (2 STORY) — CLIMATE CONTROLLED — NON-CLIMATE CONTROLLED

WIDTH	DEPTH	SQ. FT.	# UNITS	CC TOTAL S.F. SQ. FT.	% OF UNIT	# UNITS	NCC TOTAL S.F. SQ. FT.	% OF UNIT	TOTAL UNITS
5	5	25		-	0.00%	3	75	1.58%	3
5	10	50	15	750	7.89%	6	300	3.16%	21
5	15	75		-	0.00%	1	75	0.53%	1
10	10	100	93	9,300	48.95%	27	2,700	14.21%	120
10	15	150	14	2,100	7.37%		-	0.00%	14
10	20	200		-	0.00%	1	200	0.53%	1
10	25	250		-	0.00%		-	0.00%	0
10	30	300		-	0.00%		-	0.00%	0
15	15	225		-	0.00%		-	0.00%	0
7.5	10	75	20	1,500	10.53%		-	0.00%	20
7.5	15	112.5	4	450	2.11%		-	0.00%	4
12	40	480		-	0.00%		-	0.00%	0
5	12	60	1	60	0.53%		-	0.00%	1
10	12	120	5	600	2.63%		-	0.00%	5
		0		-	0.00%		-	0.00%	0
TOTALS:			152	14,760	80.00%	38	3,350	20.00%	190

TOTAL RENTABLE UNITS:	190
TOTAL OFFICE SQ. FT:	1950
TOTAL HALLWAY/MECH. SQ. FT:	7,640
TOTAL UNIT SQUARE FOOTAGE:	18,110
TOTAL GROSS SQUARE FOOTAGE:	27,700
TOTAL PERCENT RENTABLE:	65.38%

RABCO UNIT MIX COUNT

JOB: LU-10-K-1345 DATE: 12/18/2010

BLDG E & H (PHASE 2) — CLIMATE CONTROLLED — NON-CLIMATE CONTROLLED

WIDTH	DEPTH	SQ. FT.	# UNITS	CC TOTAL S.F. SQ. FT.	% OF UNIT	# UNITS	NCC TOTAL S.F. SQ. FT.	% OF UNIT	TOTAL UNITS
5	5	25	2	50	0.56%	8	200	2.25%	10
5	10	50	64	3,200	17.98%	16	800	4.49%	80
5	15	75	1	75	0.28%	1	75	0.28%	2
10	10	100	64	6,400	17.98%	88	8,800	24.72%	152
10	15	150		-	0.00%	12	1,800	3.37%	12
10	20	200		-	0.00%	4	800	1.12%	4
10	25	250		-	0.00%		-	0.00%	0
10	30	300		-	0.00%		-	0.00%	0
15	15	225		-	0.00%		-	0.00%	0
7.5	10	75	92	6,900	25.84%		-	0.00%	92
12.5	10	125	4	500	1.12%		-	0.00%	4
12	40	480		-	0.00%		-	0.00%	0
		0		-	0.00%		-	0.00%	0
		0		-	0.00%		-	0.00%	0
		0		-	0.00%		-	0.00%	0
TOTALS:			227	17,125	63.76%	129	12,475	36.24%	356

TOTAL RENTABLE UNITS:	356
TOTAL OFFICE SQ. FT:	
TOTAL HALLWAY/MECH. SQ. FT:	5,975
TOTAL UNIT SQUARE FOOTAGE:	29,600
TOTAL GROSS SQUARE FOOTAGE:	35,575
TOTAL PERCENT RENTABLE:	83.20%

RABCO UNIT MIX COUNT

JOB: LU-10-K-1345 DATE: 12/18/2010

BLDGS. A C F D I G & J — CLIMATE CONTROLLED — NON-CLIMATE CONTROLLED

WIDTH	DEPTH	SQ. FT.	# UNITS	CC TOTAL S.F. SQ. FT.	% OF UNIT	# UNITS	NCC TOTAL S.F. SQ. FT.	% OF UNIT	TOTAL UNITS
5	5	25		-	0.00%		-	0.00%	0
5	10	50		-	0.00%	11	550	6.51%	11
5	15	75		-	0.00%		-	0.00%	0
10	10	100		-	0.00%	3	300	1.78%	3
10	15	150		-	0.00%	18	2,700	10.65%	18
10	20	200		-	0.00%	104	20,800	61.54%	104
10	25	250		-	0.00%		-	0.00%	0
10	30	300		-	0.00%	21	6,300	12.43%	21
15	15	225		-	0.00%		-	0.00%	0
7.5	10	75		-	0.00%		-	0.00%	0
12.5	10	125		-	0.00%		-	0.00%	0
12	40	480		-	0.00%	12	5,760	7.10%	12
		0		-	0.00%		-	0.00%	0
		0		-	0.00%		-	0.00%	0
		0		-	0.00%		-	0.00%	0
TOTALS:			0	-	0.00%	169	36,410	100.00%	169

TOTAL RENTABLE UNITS:	169
TOTAL OFFICE SQ. FT:	
TOTAL HALLWAY/MECH. SQ. FT:	
TOTAL UNIT SQUARE FOOTAGE:	36,410
TOTAL GROSS SQUARE FOOTAGE:	36,410
TOTAL PERCENT RENTABLE:	100.00%

HOLEY MOLEY SAYS
"DIG SAFELY"

"IT'S THE LAW"
CALL 2 WORKING DAYS BEFORE YOU DIG
1-800-382-5544
CALL TOLL FREE
PER INDIANA STATE LAW IC8-1-26, IT IS AGAINST THE LAW TO EXCAVATE WITHOUT NOTIFYING THE UNDERGROUND LOCATION SERVICE TWO (2) WORKING DAYS BEFORE COMMENCING WORK.

CAUTION

LOCATION OF ALL EXISTING UNDERGROUND UTILITIES SHOWN ON THIS PLAN ARE BASED UPON ABOVE GROUND EVIDENCE, (including, but not limited to, manholes, inlets, valves, & marks made upon the ground by others.) AND ARE SPECULATIVE IN NATURE. THERE MAY ALSO BE OTHER EXISTING UNDERGROUND UTILITIES FOR WHICH THERE IS NO ABOVE GROUND EVIDENCE OR FOR WHICH NO ABOVE GROUND EVIDENCE WAS OBSERVED. THE EXACT LOCATIONS OF SAID EXISTING UNDERGROUND UTILITIES SHOULD BE VERIFIED BY THE CONTRACTOR PRIOR TO ANY AND ALL CONSTRUCTION.

DATE	MARK	REVISIONS	BY
3/16/11	1	ADDED HVAC ROOM & COMPRESSOR LOCATION	KRG
3/3/11	2	REV. BL AND PARKING SPACES	KRG

JAMES O. RINEHART IV REGISTERED No. 10200495 STATE OF INDIANA PROFESSIONAL ENGINEER

THIS DRAWING IS NOT INTENDED TO BE REPRESENTED AS A RETRACEMENT OR ORIGINAL BOUNDARY SURVEY, A ROUTE SURVEY, OR A SURVEYOR LOCATION REPORT.

CERTIFIED: 1/27/11

STOEPPELWERTH & ASSOCIATES, INC.
CONSULTING ENGINEERS & LAND SURVEYORS
7965 East 106th Street, Fishers, IN 46038-2505
Phone: (317) 849-5935 Fax: (317) 849-5942
Toll Free: (800) 728-6917

SITE PLAN
STORAMERICA
HAMILTON COUNTY, INDIANA
WESTFIELD

DRAWN BY: KRG CHECKED BY: BKR

SHEET NO. C200

S & A JOB NO. 5981SRAD

S:\5981SR\DWG\Proj\C200-Site Plan.dwg, Layout1, 3/16/2011 11:54:08 AM, KStinch, 1:1

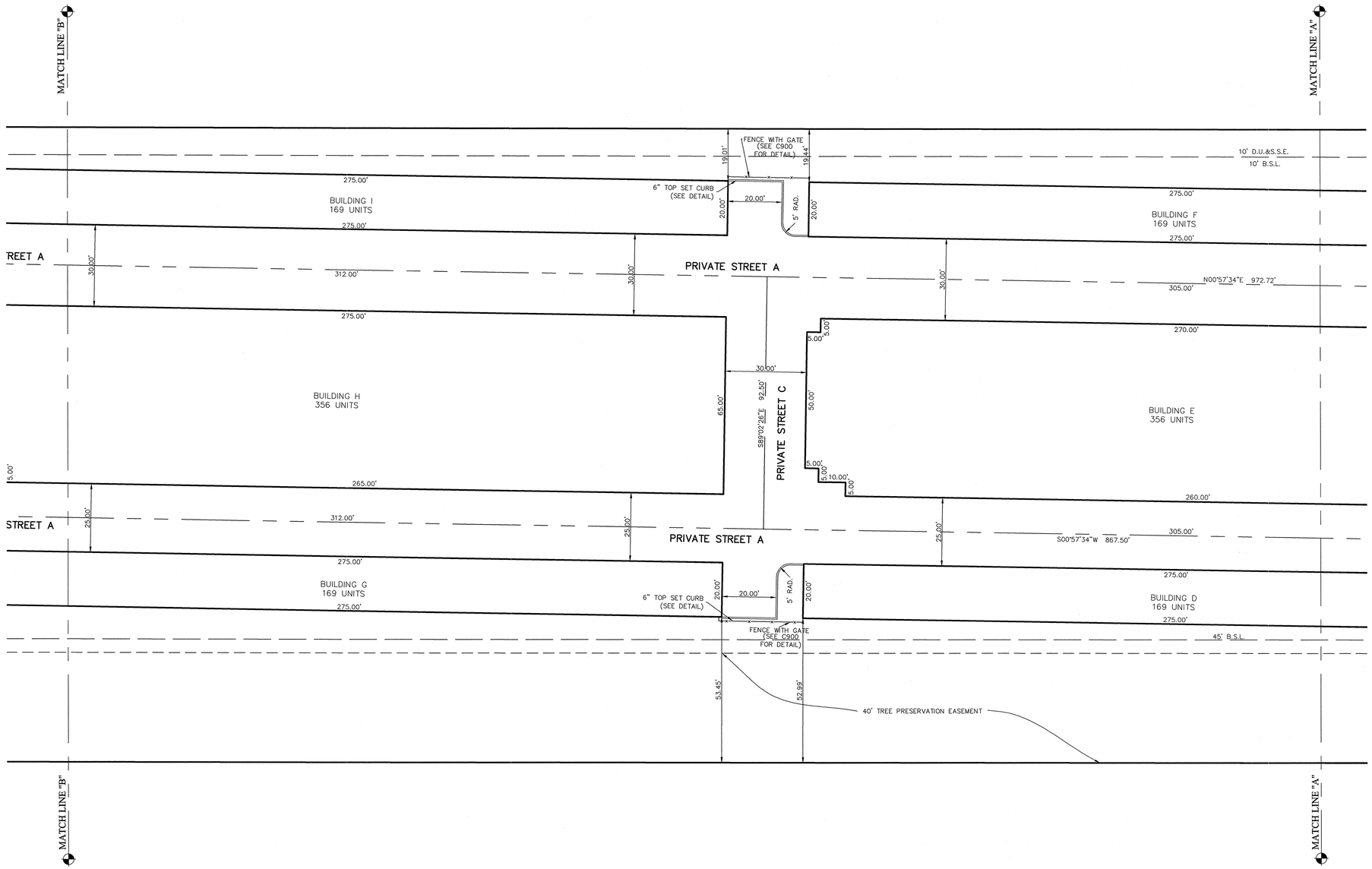

GRAPHIC SCALE

20 0 10 20

(IN FEET)
1 inch = 20 ft.

LEGEND

B.S.L.	Building setback line
D&U.E.	Drainage & utility easement
R.AD.	Radius
H.C.	Handicap

BENCHMARK:

Hamilton County Benchmark #55 - Bronze plug in 18" tall 10" x 10" concrete post, 14 feet North of Northeast wingwall, 6 feet East of East edge of pavement on Oak Road, 40 feet ± North of centerline of Cool Creek.

ELEVATION = 810.10 (NAVD '88)

RABCO UNIT MIX COUNT

JOB: LU-10-K-1345 DATE: 12/18/2010

BLDG B (2 STORY)

			CLIMATE CONTROLLED			NON-CLIMATE CONTROLLED			
WIDTH	DEPTH	SQ. FT.	# UNITS	CC TOTAL S.F. SQ. FT.	% OF UNIT	# UNITS	NCC TOTAL S.F. SQ. FT.	% OF UNIT	TOTAL UNITS
5	5	25		-	0.00%	3	75	1.58%	3
5	10	50	15	750	7.89%	6	300	3.16%	21
5	15	75		-	0.00%	1	75	0.53%	1
10	10	100	93	9,300	48.95%	27	2,700	14.21%	120
10	15	150	14	2,100	7.37%		-	0.00%	14
10	20	200		-	0.00%	1	200	0.53%	1
10	25	250		-	0.00%		-	0.00%	0
10	30	300		-	0.00%		-	0.00%	0
15	15	225		-	0.00%		-	0.00%	0
7.5	10	75	20	1,500	10.53%		-	0.00%	20
7.5	15	112.5	4	450	2.11%		-	0.00%	4
12	40	480		-	0.00%		-	0.00%	0
5	12	60	1	60	0.53%		-	0.00%	1
10	12	120	5	600	2.63%		-	0.00%	5
		0		-	0.00%		-	0.00%	0
TOTALS:			152	14,760	80.00%	38	3,350	20.00%	190

TOTAL RENTABLE UNITS:	190
TOTAL OFFICE SQ. FT:	1950
TOTAL HALLWAY/MECH. SQ. FT:	7,640
TOTAL UNIT SQUARE FOOTAGE:	18,110
TOTAL GROSS SQUARE FOOTAGE:	27,700
TOTAL PERCENT RENTABLE:	65.38%

RABCO UNIT MIX COUNT

JOB: LU-10-K-1345 DATE: 12/18/2010

BLDG E & H (PHASE 2)

			CLIMATE CONTROLLED			NON-CLIMATE CONTROLLED			
WIDTH	DEPTH	SQ. FT.	# UNITS	CC TOTAL S.F. SQ. FT.	% OF UNIT	# UNITS	NCC TOTAL S.F. SQ. FT.	% OF UNIT	TOTAL UNITS
5	5	25	2	50	0.56%	8	200	2.25%	10
5	10	50	64	3,200	17.98%	16	800	4.49%	80
5	15	75	1	75	0.28%	1	75	0.28%	2
10	10	100	64	6,400	17.98%	88	8,800	24.72%	152
10	15	150		-	0.00%	12	1,800	3.37%	12
10	20	200		-	0.00%	4	800	1.12%	4
10	25	250		-	0.00%		-	0.00%	0
10	30	300		-	0.00%		-	0.00%	0
15	15	225		-	0.00%		-	0.00%	0
7.5	10	75	92	6,900	25.84%		-	0.00%	92
12.5	10	125	4	500	1.12%		-	0.00%	4
12	40	480		-	0.00%		-	0.00%	0
		0		-	0.00%		-	0.00%	0
		0		-	0.00%		-	0.00%	0
		0		-	0.00%		-	0.00%	0
TOTALS:			227	17,125	63.76%	129	12,475	36.24%	356

TOTAL RENTABLE UNITS:	356
TOTAL OFFICE SQ. FT:	
TOTAL HALLWAY/MECH. SQ. FT:	5,975
TOTAL UNIT SQUARE FOOTAGE:	29,600
TOTAL GROSS SQUARE FOOTAGE:	35,575
TOTAL PERCENT RENTABLE:	83.20%

RABCO UNIT MIX COUNT

JOB: LU-10-K-1345 DATE: 12/18/2010

BLDGS. A C F D I G & J

			CLIMATE CONTROLLED			NON-CLIMATE CONTROLLED			
WIDTH	DEPTH	SQ. FT.	# UNITS	CC TOTAL S.F. SQ. FT.	% OF UNIT	# UNITS	NCC TOTAL S.F. SQ. FT.	% OF UNIT	TOTAL UNITS
5	5	25		-	0.00%		-	0.00%	0
5	10	50		-	0.00%	11	550	6.51%	11
5	15	75		-	0.00%		-	0.00%	0
10	10	100		-	0.00%	3	300	1.78%	3
10	15	150		-	0.00%	18	2,700	10.65%	18
10	20	200		-	0.00%	104	20,800	61.54%	104
10	25	250		-	0.00%		-	0.00%	0
10	30	300		-	0.00%	21	6,300	12.43%	21
15	15	225		-	0.00%		-	0.00%	0
7.5	10	75		-	0.00%		-	0.00%	0
12.5	10	125		-	0.00%		-	0.00%	0
12	40	480		-	0.00%	12	5,760	7.10%	12
		0		-	0.00%		-	0.00%	0
		0		-	0.00%		-	0.00%	0
		0		-	0.00%		-	0.00%	0
TOTALS:			0	-	0.00%	169	36,410	100.00%	169

TOTAL RENTABLE UNITS:	169
TOTAL OFFICE SQ. FT:	
TOTAL HALLWAY/MECH. SQ. FT:	
TOTAL UNIT SQUARE FOOTAGE:	36,410
TOTAL GROSS SQUARE FOOTAGE:	36,410
TOTAL PERCENT RENTABLE:	100.00%

HOLEY MOLEY SAYS
"DIG SAFELY"

"IT'S THE LAW"
CALL 2 WORKING DAYS BEFORE YOU DIG
1-800-382-5544
CALL TOLL FREE
PER INDIANA STATE LAW IC8-1-26.
IT IS AGAINST THE LAW TO EXCAVATE WITHOUT NOTIFYING THE UNDERGROUND LOCATION SERVICE TWO (2) WORKING DAYS BEFORE COMMENCING WORK.

CAUTION

LOCATION OF ALL EXISTING UNDERGROUND UTILITIES SHOWN ON THIS PLAN ARE BASED UPON ABOVE GROUND EVIDENCE. (including, but not limited to, manholes, inlets, valves, & marks made upon the ground by others.) AND ARE SPECULATIVE IN NATURE. THERE MAY ALSO BE OTHER EXISTING UNDERGROUND UTILITIES FOR WHICH THERE IS NO ABOVE GROUND EVIDENCE OR FOR WHICH NO ABOVE GROUND EVIDENCE WAS OBSERVED. THE EXACT LOCATIONS OF SAID EXISTING UNDERGROUND UTILITIES SHOULD BE VERIFIED BY THE CONTRACTOR PRIOR TO ANY AND ALL CONSTRUCTION.

		3/3/11	ADDED GATE TO FENCES
		DATE	MARK
		REVISIONS	
		KRG	BY

JAMES O. RINEHART IV
REGISTERED
No. 10200495
STATE OF INDIANA
PROFESSIONAL ENGINEER

THIS DRAWING IS NOT INTENDED TO BE REPRESENTED AS A RETRACEMENT OR ORIGINAL BOUNDARY SURVEY, A ROUTE SURVEY, OR A SURVEYOR LOCATION REPORT.

CERTIFIED: 1/27/11

STOEPPELWERTH & ASSOCIATES, INC.
CONSULTING ENGINEERS & LAND SURVEYORS
7965 East 106th Street, Fishers, IN 46038-2505
Phone: (317) 849-5935 Fax: (317) 849-5942
Toll Free: (800) 728-6917

SITE PLAN
STORAMERICA
HAMILTON COUNTY, INDIANA
WESTFIELD

DRAWN BY: KRG | CHECKED BY: BKR

SHEET NO. C201

S & A JOB NO. 59815RAD

S:\59815RAD\Dwg\C201 Site Plan.dwg, Layout1, 3/29/11 1:23:43 PM, KStitch, 1:1

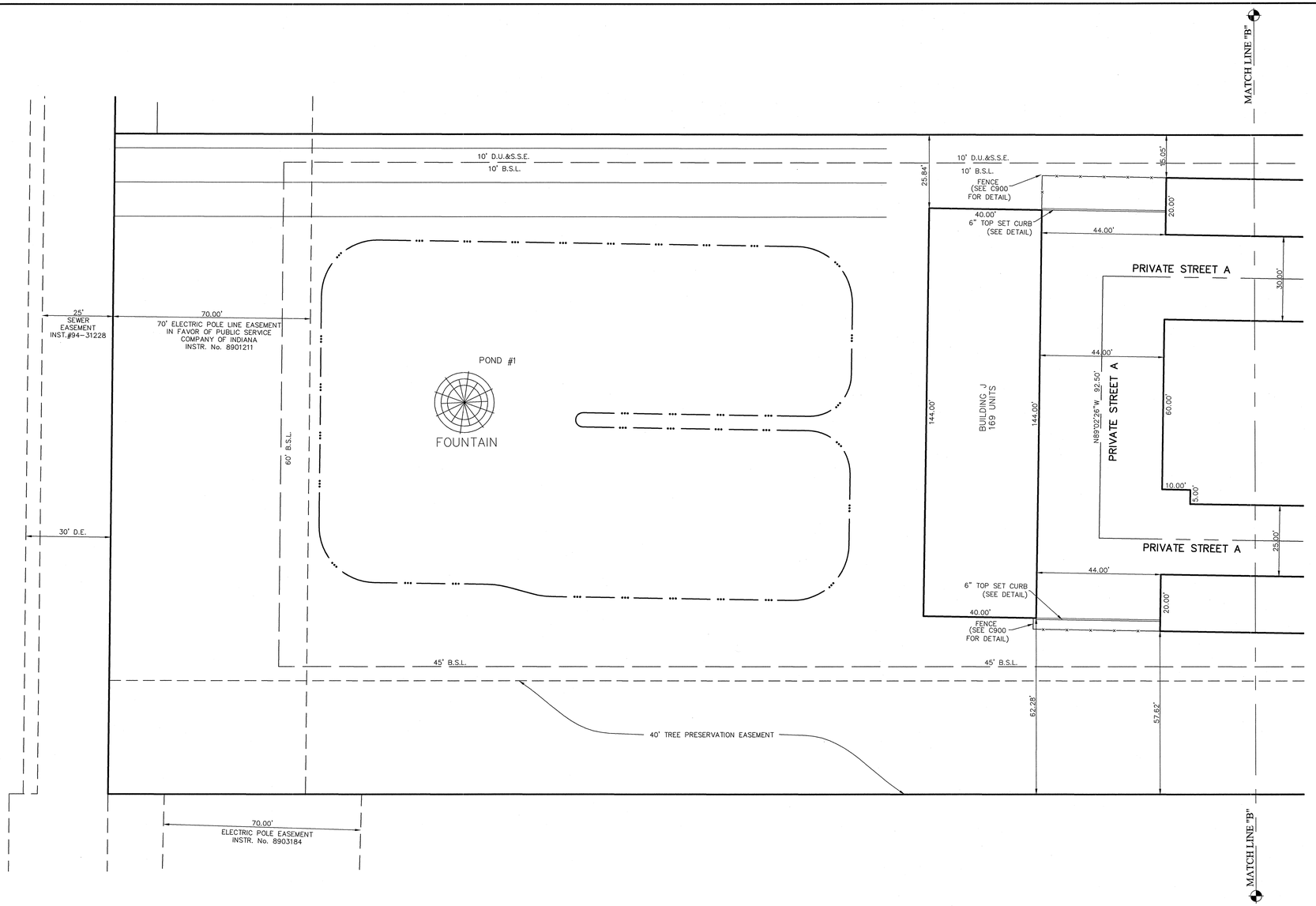

GRAPHIC SCALE

20 0 10 20

(IN FEET)
1 inch = 20 ft.

LEGEND

B.S.L.	Building setback line
D&U.E.	Drainage & utility easement
RAD.	Radius
H.C.	Handicap

BENCHMARK:

Hamilton County Benchmark #55 - Bronze plug in 18" tall 10" x 10" concrete post, 14 feet North of Northeast wingwall, 6 feet East of East edge of pavement on Oak Road, 40 feet ± North of centerline of Cool Creek.

ELEVATION = 810.10 (NAVD '88)

RABCO UNIT MIX COUNT

JOB: LU-10-K-1345 DATE: 12/18/2010

BLDG B (2 STORY)

			CLIMATE CONTROLLED			NON-CLIMATE CONTROLLED			
WIDTH	DEPTH	SQ. FT.	# UNITS	CC TOTAL S.F. SQ. FT.	% OF UNIT	# UNITS	NCC TOTAL S.F. SQ. FT.	% OF UNIT	TOTAL UNITS
5	5	25		-	0.00%	3	75	1.58%	3
5	10	50	15	750	7.89%	6	300	3.16%	21
5	15	75			0.00%	1	75	0.53%	1
10	10	100	93	9,300	48.95%	27	2,700	14.21%	120
10	15	150	14	2,100	7.37%		-	0.00%	14
10	20	200		-	0.00%	1	200	0.53%	1
10	25	250		-	0.00%		-	0.00%	0
10	30	300		-	0.00%		-	0.00%	0
15	15	225		-	0.00%		-	0.00%	0
7.5	10	75	20	1,500	10.53%		-	0.00%	20
7.5	15	112.5	4	450	2.11%		-	0.00%	4
12	40	480		-	0.00%		-	0.00%	0
5	12	60	1	60	0.53%		-	0.00%	1
10	12	120	5	600	2.63%		-	0.00%	5
		0		-	0.00%		-	0.00%	0
TOTALS:			152	14,760	80.00%	38	3,350	20.00%	190

TOTAL RENTABLE UNITS:	190
TOTAL OFFICE SQ. FT.:	1950
TOTAL HALLWAY/MECH. SQ. FT:	7,640
TOTAL UNIT SQUARE FOOTAGE:	18,110
TOTAL GROSS SQUARE FOOTAGE:	27,700
TOTAL PERCENT RENTABLE:	65.38%

RABCO UNIT MIX COUNT

JOB: LU-10-K-1345 DATE: 12/18/2010

BLDG E & H (PHASE 2)

			CLIMATE CONTROLLED			NON-CLIMATE CONTROLLED			
WIDTH	DEPTH	SQ. FT.	# UNITS	CC TOTAL S.F. SQ. FT.	% OF UNIT	# UNITS	NCC TOTAL S.F. SQ. FT.	% OF UNIT	TOTAL UNITS
5	5	25	2	50	0.56%	8	200	2.25%	10
5	10	50	64	3,200	17.98%	16	800	4.49%	80
5	15	75	1	75	0.28%	1	75	0.28%	2
10	10	100	64	6,400	17.98%	88	8,800	24.72%	152
10	15	150		-	0.00%	12	1,800	3.37%	12
10	20	200		-	0.00%	4	800	1.12%	4
10	25	250		-	0.00%		-	0.00%	0
10	30	300		-	0.00%		-	0.00%	0
15	15	225		-	0.00%		-	0.00%	0
7.5	10	75	92	6,900	25.84%		-	0.00%	92
12.5	10	125	4	500	1.12%		-	0.00%	4
12	40	480		-	0.00%		-	0.00%	0
		0		-	0.00%		-	0.00%	0
		0		-	0.00%		-	0.00%	0
		0		-	0.00%		-	0.00%	0
TOTALS:			227	17,125	63.76%	129	12,475	36.24%	356

TOTAL RENTABLE UNITS:	356
TOTAL OFFICE SQ. FT:	
TOTAL HALLWAY/MECH. SQ. FT:	5,975
TOTAL UNIT SQUARE FOOTAGE:	29,600
TOTAL GROSS SQUARE FOOTAGE:	35,575
TOTAL PERCENT RENTABLE:	83.20%

RABCO UNIT MIX COUNT

JOB: LU-10-K-1345 DATE: 12/18/2010

BLDGS. A C F D I G & J

			CLIMATE CONTROLLED			NON-CLIMATE CONTROLLED			
WIDTH	DEPTH	SQ. FT.	# UNITS	CC TOTAL S.F. SQ. FT.	% OF UNIT	# UNITS	NCC TOTAL S.F. SQ. FT.	% OF UNIT	TOTAL UNITS
5	5	25		-	0.00%		-	0.00%	0
5	10	50		-	0.00%	11	550	6.51%	11
5	15	75		-	0.00%		-	0.00%	0
10	10	100		-	0.00%	3	300	1.78%	3
10	15	150		-	0.00%	18	2,700	10.65%	18
10	20	200		-	0.00%	104	20,800	61.54%	104
10	25	250		-	0.00%		-	0.00%	0
10	30	300		-	0.00%	21	6,300	12.43%	21
15	15	225		-	0.00%		-	0.00%	0
7.5	10	75		-	0.00%		-	0.00%	0
12.5	10	125		-	0.00%		-	0.00%	0
12	40	480		-	0.00%	12	5,760	7.10%	12
		0		-	0.00%		-	0.00%	0
		0		-	0.00%		-	0.00%	0
		0		-	0.00%		-	0.00%	0
TOTALS:			0	-	0.00%	169	36,410	100.00%	169

TOTAL RENTABLE UNITS:	169
TOTAL OFFICE SQ. FT:	
TOTAL HALLWAY/MECH. SQ. FT:	
TOTAL UNIT SQUARE FOOTAGE:	36,410
TOTAL GROSS SQUARE FOOTAGE:	36,410
TOTAL PERCENT RENTABLE:	100.00%

HOLEY MOLEY SAYS
"DIG SAFELY"

"IT'S THE LAW"
CALL 2 WORKING DAYS BEFORE YOU DIG
1-800-382-5544
CALL TOLL FREE
PER INDIANA STATE LAW IC8-1-26.
IT IS AGAINST THE LAW TO EXCAVATE WITHOUT NOTIFYING THE UNDERGROUND LOCATION SERVICE TWO (2) WORKING DAYS BEFORE COMMENCING WORK.

CAUTION

LOCATION OF ALL EXISTING UNDERGROUND UTILITIES SHOWN ON THIS PLAN ARE BASED UPON ABOVE GROUND EVIDENCE. (including, but not limited to, manholes, inlets, valves, & marks made upon the ground by others.) AND ARE SPECULATIVE IN NATURE. THERE MAY ALSO BE OTHER EXISTING UNDERGROUND UTILITIES FOR WHICH THERE IS NO ABOVE GROUND EVIDENCE OR FOR WHICH NO ABOVE GROUND EVIDENCE WAS OBSERVED. THE EXACT LOCATIONS OF SAID EXISTING UNDERGROUND UTILITIES SHOULD BE VERIFIED BY THE CONTRACTOR PRIOR TO ANY AND ALL CONSTRUCTION.

NO.	DATE	MARK	REVISIONS	BY
	3/3/11	REVISED BL		KRG

JAMES O. RINEHART IV
REGISTERED
No. 10200495
STATE OF INDIANA
PROFESSIONAL ENGINEER

THIS DRAWING IS NOT INTENDED TO BE REPRESENTED AS A RETRACEMENT OR ORIGINAL BOUNDARY SURVEY, A ROUTE SURVEY, OR A SURVEYOR LOCATION REPORT.

CERTIFIED: 1/27/11

STOEPPELWERTH & ASSOCIATES, INC.
CONSULTING ENGINEERS & LAND SURVEYORS
7965 East 106th Street, Fishers, IN 46038-2505
Phone: (317) 849-5935 Fax: (317) 849-5942
Toll Free: (800) 728-6917

SITE PLAN
STORAMERICA
HAMILTON COUNTY, INDIANA
WESTFIELD

DRAWN BY: KRG | CHECKED BY: BKR

SHEET NO. C202

S & A JOB NO. 59815RAD

S:\59815RAD\Dwg\C200-Site Plan.dwg, Layout1, 3/4/2011 1:24:23 PM, KStiles, 1:1

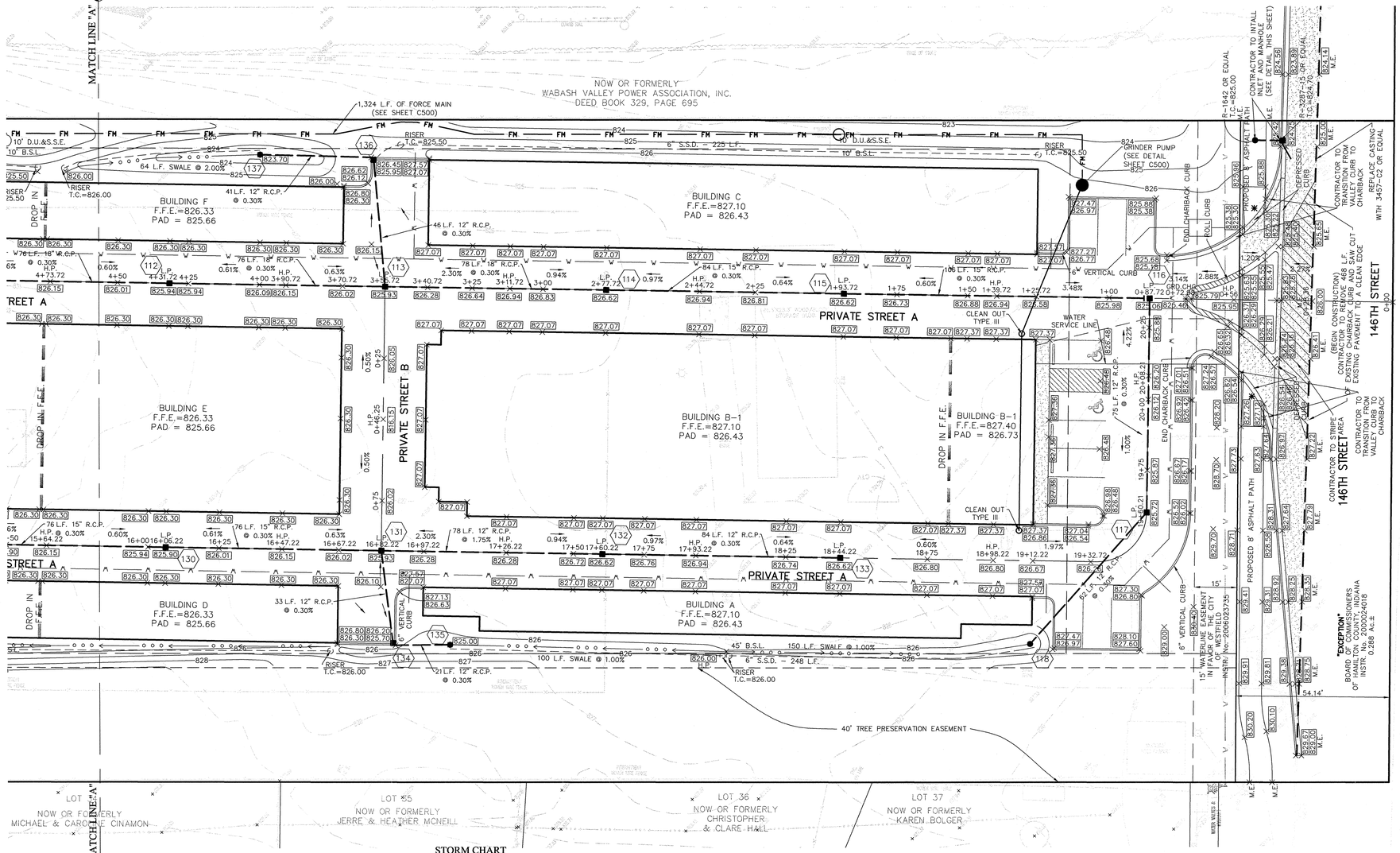

STORM CHART

STRUCTURE INFO				UPSTREAM PIPE INFO			DOWNSTREAM PIPE INFO				
STR.#	TYPE	T.C.	CASTING TYPE	DIAMETER	DIRECTION	INV_IN	DIAMETER	DIRECTION	INV_OUT	LENGTH	SLOPE
100	END SECTION			12	N	814.80					
101	MANHOLE	819.60	R-1772	12	N	815.89	12	S	815.89	324	0.34%
101A	MANHOLE	821.30	R-1772	12	W	816.98	12	S	816.98	324	0.34%
101B	MANHOLE	825.32	R-1772	12	SW	818.40	12	E	818.40	423	0.34%
101C	OUTLET CONTROL STRUCTURE	821.85	SEE DETAIL SHEET C602				12	NE	818.68	84	0.34%
102	END SECTION			30	SW	818.68					
103	YARD INLET	824.30	R-4342	30	S	818.79	30	NE	818.79	35	0.30%
104	YARD INLET	823.80	R-4342	27	SE	818.96	30	N	818.96	57	0.30%
				12	S	818.96					
105	STREET INLET	824.50	R-3405	27	S	819.08	27	NW	819.08	40	0.30%
				15	E	819.08					
106	STREET INLET	824.77	R-3405	27	S	819.33	27	N	819.33	85	0.30%
107	STREET INLET	825.23	R-3405	24	S	819.70	27	N	819.70	122	0.30%
108	STREET INLET	825.42	R-3405	21	E	820.01	24	N	820.01	105	0.30%
				18	S	820.01					
109	STREET INLET	825.42	R-3405	21	S	820.29	21	W	820.29	92	0.30%
				12	W	820.01					
				12	E	820.29					
110	STREET INLET	825.11	R-3405	21	S	820.47	21	N	820.47	59	0.30%
111	STREET INLET	825.55	R-3405	18	S	820.75	21	N	820.75	94	0.30%
112	STREET INLET	825.90	R-3405	18	S	820.98	18	N	820.98	76	0.30%
113	STREET INLET	825.93	R-3405	18	S	821.21	18	N	821.21	76	0.30%
				12	E	821.21					
114	STREET INLET	826.62	R-3405	15	S	821.44	18	N	821.44	78	0.30%
115	STREET INLET	826.62	R-3405	15	S	821.69	15	N	821.69	84	0.30%
116	STREET INLET	825.68	R-3405	12	W	822.01	15	N	822.01	106	0.30%
117	STREET INLET	825.72	R-3405	12	W	822.24	12	E	822.24	75	0.30%
118	YARD INLET	824.50	R-4342				12	E	822.35	38	0.30%
119	STREET INLET	824.50	R-3405	15	S	820.93	15	W	820.93	92	2.00%
120	STREET INLET	824.77	R-3405	12	S	821.18	15	N	821.18	85	0.30%
121	STREET INLET	825.23	R-3405				12	N	821.54	122	0.30%
122	STREET INLET	825.17	R-3405	12	NW	820.11	12	E	820.11	33	0.30%
123	YARD INLET	823.00	R-4342	12	N	820.16	12	SE	820.16	14	0.30%
124	YARD INLET	823.50	R-4342				12	S	820.32	55	0.30%
125	STREET INLET	825.17	R-3405	12	SE	820.40	12	W	820.40	36	0.30%
126	YARD INLET	825.50	R-4342	12	S	820.43	12	NW	820.43	9	0.30%
127	YARD INLET	824.60	R-4342				12	N	820.70	90	0.30%
128	STREET INLET	825.11	R-3405	18	S	820.69	18	N	820.69	59	1.00%
129	STREET INLET	825.55	R-3405	15	S	820.88	18	N	820.88	94	0.30%
130	STREET INLET	825.90	R-3405	15	S	821.11	15	N	821.11	76	0.30%
131	STREET INLET	825.93	R-3405	12	S	821.33	15	N	821.33	76	0.30%
				12	W	821.33					
132	STREET INLET	826.62	R-3405	12	S	822.70	12	N	822.70	78	1.75%
133	STREET INLET	826.62	R-3405				12	N	822.95	84	0.30%
134	STREET INLET	825.70	R-3405	12	S	821.43	12	E	821.43	33	0.30%
135	YARD INLET	825.00	R-4342				12	N	821.49	21	0.30%
136	STREET INLET	825.95	R-3405	12	N	821.35	12	W	821.35	46	0.30%
137	YARD INLET	823.70	R-4342				12	S	821.47	41	0.30%
138	YARD INLET	822.50	R-4342				12	N	819.09	45	0.30%

GENERAL NOTES:

1.) BLUE REFLECTORS SHALL BE INSTALLED IN THE CENTER LINE OF THE PAVEMENT TO MARK FIRE HYDRANTS PER THE TOWN OF WESTFIELD'S UTILITY AND INFRASTRUCTURE CONSTRUCTION STANDARDS.

2.) ALL SSD'S (SUBSURFACE DRAINS) WILL NEED TO BE DOUBLE WALL SMOOTH BORE PERFORATED (HDPE) PIPE.

3.) ALL EXISTING OFF-SITE DRAIN TILES THAT ARE ENCOUNTERED SHALL BE TIED INTO THE PROPOSED STORM SEWER SYSTEM WITH A POSITIVE OUTFLOW. ANY TILE THAT IS ENCOUNTERED THAT IS COMPLETELY ON-SITE MUST BE CRUSHED AND ABANDONED.

ALL PADS SHALL BE TESTED TO ASSURE A COMPACTION OF AT LEAST 95 PERCENT OF THE MAXIMUM DRY DENSITY USING THE STANDARD PROCTOR TEST METHOD.

UTILITY CROSSINGS

CONTRACTOR SHALL VERIFY LOCATION AND DEPTH OF ALL EXISTING UTILITIES PRIOR TO CONSTRUCTION TO CONFIRM THERE ARE NO CROSSING CONFLICTS. CONFLICTS THAT ARE DISCOVERED AFTER CONSTRUCTION BEGINS ARE SOLELY THE CONTRACTOR'S RESPONSIBILITY.

BENCHMARK:

Hamilton County Benchmark #55 - Bronze plug in 18" tall 10" x 10" concrete post, 14 feet North of Northeast wingwall, 6 feet East of East edge of pavement on Oak Road, 40 feet ± North of centerline of Cool Creek.

ELEVATION = 810.10 (NAVD '88)

GRAPHIC SCALE

20 0 10 20

(IN FEET)
1 inch = 20 ft.

LEGEND

B.S.L.	Building Setback Line
D&U.E.	Drainage & Utility Easement
D.U.&S.S.E.	Drainage, Utility & Sanitary Sewer Easement
H.P.	High Point
L.P.	Low Point
GRD.CHG	Grade Change
M.E.	Match Existing
F.F.E.	Finish Floor Elevation
	Existing Water
	Existing Contour
	Existing Santiary Sewer
	Existing Storm Sewer
827.07	Proposed Grade
828	Proposed Contour
FM	Proposed Force Main
	Proposed Storm Sewer
	Proposed Swale
	Proposed Water Line

TYPICAL ON ALL INVERTED CROWNS

HOLEY MOLEY SAYS
"DIG SAFELY"

"IT'S THE LAW"
CALL 2 WORKING DAYS BEFORE YOU DIG
1-800-382-5544
CALL TOLL FREE
PER INDIANA STATE LAW IC8-1-26.
IT IS AGAINST THE LAW TO EXCAVATE WITHOUT NOTIFYING THE UNDERGROUND LOCATION SERVICE TWO (2) WORKING DAYS BEFORE COMMENCING WORK.

CAUTION

LOCATION OF ALL EXISTING UNDERGROUND UTILITIES SHOWN ON THIS PLAN ARE BASED UPON ABOVE GROUND EVIDENCE. (including, but not limited to, manholes, inlets, valves, & marks made upon the ground by others.) AND ARE SPECULATIVE IN NATURE. THERE MAY ALSO BE OTHER EXISTING UNDERGROUND UTILITIES FOR WHICH THERE IS NO ABOVE GROUND EVIDENCE OR FOR WHICH NO ABOVE GROUND EVIDENCE WAS OBSERVED. THE EXACT LOCATIONS OF SAID EXISTING UNDERGROUND UTILITIES SHOULD BE VERIFIED BY THE CONTRACTOR PRIOR TO ANY AND ALL CONSTRUCTION.

DATE	MARK	REVISIONS	BY
3/5/11	1	ADDED RISERS AND REVISED ENTRANCE	KRG

JAMES D. RINEHART
REGISTERED
No. 10200495
STATE OF INDIANA
PROFESSIONAL ENGINEER

THIS DRAWING IS NOT INTENDED TO BE REPRESENTED AS A RETRACEMENT OR ORIGINAL BOUNDARY SURVEY, A ROUTE SURVEY, OR A SURVEYOR LOCATION REPORT.

CERTIFIED: 1/27/11

STOEPPELWERTH & ASSOCIATES, INC.
CONSULTING ENGINEERS & LAND SURVEYORS
7965 East 106th Street, Fishers, IN 46038-2505
Phone: (317) 849-5935 Fax: (317) 849-5942
Toll Free: (800) 728-6917

SITE DEVELOPMENT PLAN
STORAMERICA

HAMILTON COUNTY, INDIANA
WESTFIELD

DRAWN BY: KRG | CHECKED BY: BKR

SHEET NO. C203

S & A JOB NO. 5981SRAD

S:\5981SR\02final\C200-Site Development Plan.dwg, Layout1, 3/4/2011 12:23:43 PM, PDSlim, 1:1

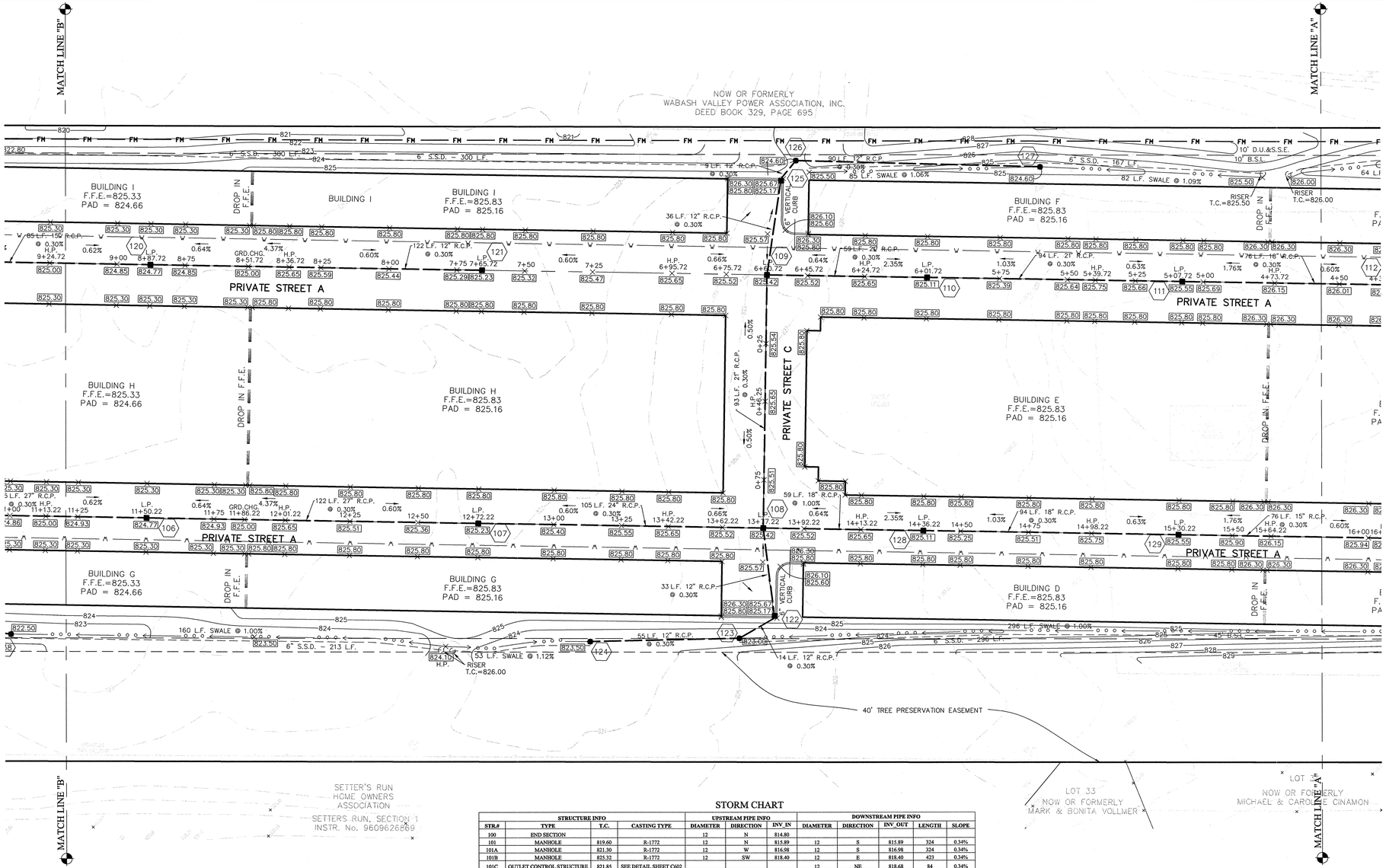

STORM CHART

STRUCTURE INFO				UPSTREAM PIPE INFO			DOWNSTREAM PIPE INFO				
STR.#	TYPE	T.C.	CASTING TYPE	DIAMETER	DIRECTION	INV_IN	DIAMETER	DIRECTION	INV_OUT	LENGTH	SLOPE
100	END SECTION			12	N	814.80					
101	MANHOLE	819.60	R-1772	12	N	815.89	12	S	815.89	324	0.34%
101A	MANHOLE	821.30	R-1772	12	W	816.98	12	S	816.98	324	0.34%
101B	MANHOLE	825.32	R-1772	12	SW	818.40	12	E	818.40	423	0.34%
101C	OUTLET CONTROL STRUCTURE	821.85	SEE DETAIL SHEET C602				12	NE	818.68	84	0.34%
102	END SECTION			30	SW	818.68					
103	YARD INLET	824.30	R-4342	30	S	818.79	30	NE	818.79	35	0.30%
104	YARD INLET	823.80	R-4342	27	SE	818.96	30	N	818.96	57	0.30%
				12	S	818.96					
105	STREET INLET	824.50	R-3405	27	S	819.08	27	NW	819.08	40	0.30%
				15	E	819.08					
106	STREET INLET	824.77	R-3405	27	S	819.33	27	N	819.33	85	0.30%
107	STREET INLET	825.23	R-3405	24	S	819.70	27	N	819.70	122	0.30%
108	STREET INLET	825.42	R-3405	21	E	820.01	24	N	820.01	105	0.30%
				18	S	820.01					
109	STREET INLET	825.42	R-3405	21	S	820.29	21	W	820.29	92	0.30%
				12	W	820.01					
				12	E	820.29					
110	STREET INLET	825.11	R-3405	21	S	820.47	21	N	820.47	59	0.30%
111	STREET INLET	825.55	R-3405	18	S	820.75	21	N	820.75	94	0.30%
112	STREET INLET	825.90	R-3405	18	S	820.98	18	N	820.98	76	0.30%
113	STREET INLET	825.93	R-3405	18	S	821.21	18	N	821.21	76	0.30%
				12	E	821.21					
114	STREET INLET	826.62	R-3405	15	S	821.44	18	N	821.44	78	0.30%
115	STREET INLET	826.62	R-3405	15	S	821.69	15	N	821.69	84	0.30%
116	STREET INLET	825.68	R-3405	12	W	822.01	15	N	822.01	106	0.30%
117	STREET INLET	825.72	R-3405	12	W	822.24	12	E	822.24	75	0.30%
118	YARD INLET	824.50	R-4342				12	E	822.35	38	0.30%
119	STREET INLET	824.50	R-3405	15	S	820.93	15	W	820.93	92	2.00%
120	STREET INLET	824.77	R-3405	12	S	821.18	15	N	821.18	85	0.30%
121	STREET INLET	825.23	R-3405				12	N	821.54	122	0.30%
122	STREET INLET	825.17	R-3405	12	NW	820.11	12	E	820.11	33	0.30%
123	YARD INLET	823.00	R-4342	12	N	820.16	12	SE	820.16	14	0.30%
124	YARD INLET	823.50	R-4342				12	S	820.32	55	0.30%
125	STREET INLET	825.17	R-3405	12	SE	820.40	12	W	820.40	36	0.30%
126	YARD INLET	825.50	R-4342	12	S	820.43	12	NW	820.43	9	0.30%
127	YARD INLET	824.60	R-4342				12	N	820.70	90	0.30%
128	STREET INLET	825.11	R-3405	18	S	820.60	18	N	820.60	59	1.05%
129	STREET INLET	825.55	R-3405	15	S	820.88	18	N	820.88	94	0.30%
130	STREET INLET	825.90	R-3405	15	S	821.11	15	N	821.11	76	0.30%
131	STREET INLET	825.93	R-3405	12	S	821.33	15	N	821.33	76	0.30%
				12	W	821.33					
132	STREET INLET	826.62	R-3405	12	S	822.70	12	N	822.70	78	1.75%
133	STREET INLET	826.62	R-3405				12	N	822.95	84	0.30%
134	STREET INLET	825.70	R-3405	12	S	821.43	12	E	821.43	33	0.30%
135	YARD INLET	825.00	R-4342				12	N	821.49	21	0.30%
136	STREET INLET	825.95	R-3405	12	N	821.35	12	W	821.35	46	0.30%
137	YARD INLET	823.70	R-4342				12	S	821.47	41	0.30%
138	YARD INLET	822.50	R-4342				12	N	819.09	45	0.30%

GENERAL NOTES:

1.) BLUE REFLECTORS SHALL BE INSTALLED IN THE CENTER LINE OF THE PAVEMENT TO MARK FIRE HYDRANTS PER THE TOWN OF WESTFIELD'S UTILITY AND INFRASTRUCTURE CONSTRUCTION STANDARDS.

2.) ALL SSD'S (SUBSURFACE DRAINS) WILL NEED TO BE DOUBLE WALL SMOOTH BORE PERFORATED (HDPE) PIPE.

3.) ALL EXISTING OFF-SITE DRAIN TILES THAT ARE ENCOUNTERED SHALL BE TIED INTO THE PROPOSED STORM SEWER SYSTEM WITH A POSITIVE OUTFLOW. ANY TILE THAT IS ENCOUNTERED THAT IS COMPLETELY ON-SITE MUST BE CRUSHED AND ABANDONED.

ALL PADS SHALL BE TESTED TO ASSURE A COMPACTION OF AT LEAST 95 PERCENT OF THE MAXIMUM DRY DENSITY USING THE STANDARD PROCTOR TEST METHOD.

UTILITY CROSSINGS

CONTRACTOR SHALL VERIFY LOCATION AND DEPTH OF ALL EXISTING UTILITIES PRIOR TO CONSTRUCTION TO CONFIRM THERE ARE NO CROSSING CONFLICTS. CONFLICTS THAT ARE DISCOVERED AFTER CONSTRUCTION BEGINS ARE SOLELY THE CONTRACTOR'S RESPONSIBILITY.

BENCHMARK:

Hamilton County Benchmark #55 - Bronze plug in 18" tall 10" x 10" concrete post, 14 feet North of Northeast wingwall, 6 feet East of East edge of pavement on Oak Road, 40 feet ± North of centerline of Cool Creek.

ELEVATION = 810.10 (NAVD '88)

GRAPHIC SCALE

20 0 10 20

(IN FEET)
1 inch = 20 ft.

LEGEND

B.S.L.	Building Setback Line
D&U.E.	Drainage & Utility Easement
D.U.&S.S.E.	Drainage, Utility & Sanitary Sewer Easement
H.P.	High Point
L.P.	Low Point
GRD.CHG	Grade Change
M.E.	Match Existing
F.F.E.	Finish Floor Elevation
W	Existing Water
	Existing Contour
	Existing Santiary Sewer
	Existing Storm Sewer
827.07	Proposed Grade
828	Proposed Contour
FM	Proposed Force Main
	Proposed Storm Sewer
	Proposed Swale
W	Proposed Water Line

HOLEY MOLEY SAYS
"DIG SAFELY"

"IT'S THE LAW"
CALL 2 WORKING DAYS BEFORE YOU DIG
1-800-382-5544
CALL TOLL FREE
PER INDIANA STATE LAW IC8-1-26,
IT IS AGAINST THE LAW TO EXCAVATE
WITHOUT NOTIFYING THE UNDERGROUND
LOCATION SERVICE TWO (2) WORKING
DAYS BEFORE COMMENCING WORK.

CAUTION
LOCATION OF ALL EXISTING UNDERGROUND UTILITIES SHOWN ON THIS PLAN ARE BASED UPON ABOVE GROUND EVIDENCE, (including, but not limited to, manholes, inlets, valves, & marks made upon the ground by others.) AND ARE SPECULATIVE IN NATURE. THERE MAY ALSO BE OTHER EXISTING UNDERGROUND UTILITIES FOR WHICH THERE IS NO ABOVE GROUND EVIDENCE OR FOR WHICH NO ABOVE GROUND EVIDENCE WAS OBSERVED. THE EXACT LOCATIONS OF SAID EXISTING UNDERGROUND UTILITIES SHOULD BE VERIFIED BY THE CONTRACTOR PRIOR TO ANY AND ALL CONSTRUCTION.

DATE	MARK	REVISIONS	BY
3/3/11		ADDED RISERS	KRG

THIS DRAWING IS NOT INTENDED TO BE REPRESENTED AS A RETRACEMENT, OR ORIGINAL BOUNDARY SURVEY, A ROUTE SURVEY, OR A SUBVISTOR LOCATION REPORT.

CERTIFIED: 1/27/11

JAMES O. RINEHART IV
REGISTERED
No. 10200495
STATE OF INDIANA
PROFESSIONAL ENGINEER

STOEPPELWERTH & ASSOCIATES, INC.
CONSULTING ENGINEERS & LAND SURVEYORS
7965 East 106th Street, Fishers, IN 46038-2505
Phone: (317) 849-5935 Fax: (317) 849-5942
Toll Free: (800) 728-6917

SITE DEVELOPMENT PLAN
STORAMERICA
HAMILTON COUNTY, INDIANA
WESTFIELD

DRAWN BY: KRG
CHECKED BY: BKR

SHEET NO.
C204

S & A JOB NO.
59815RAD

S:\59815RAD\Dwg\Civil\Site Development Plan.dwg, Layout1, 3/4/2011 12:44:58 PM, KStiltner, 1:1

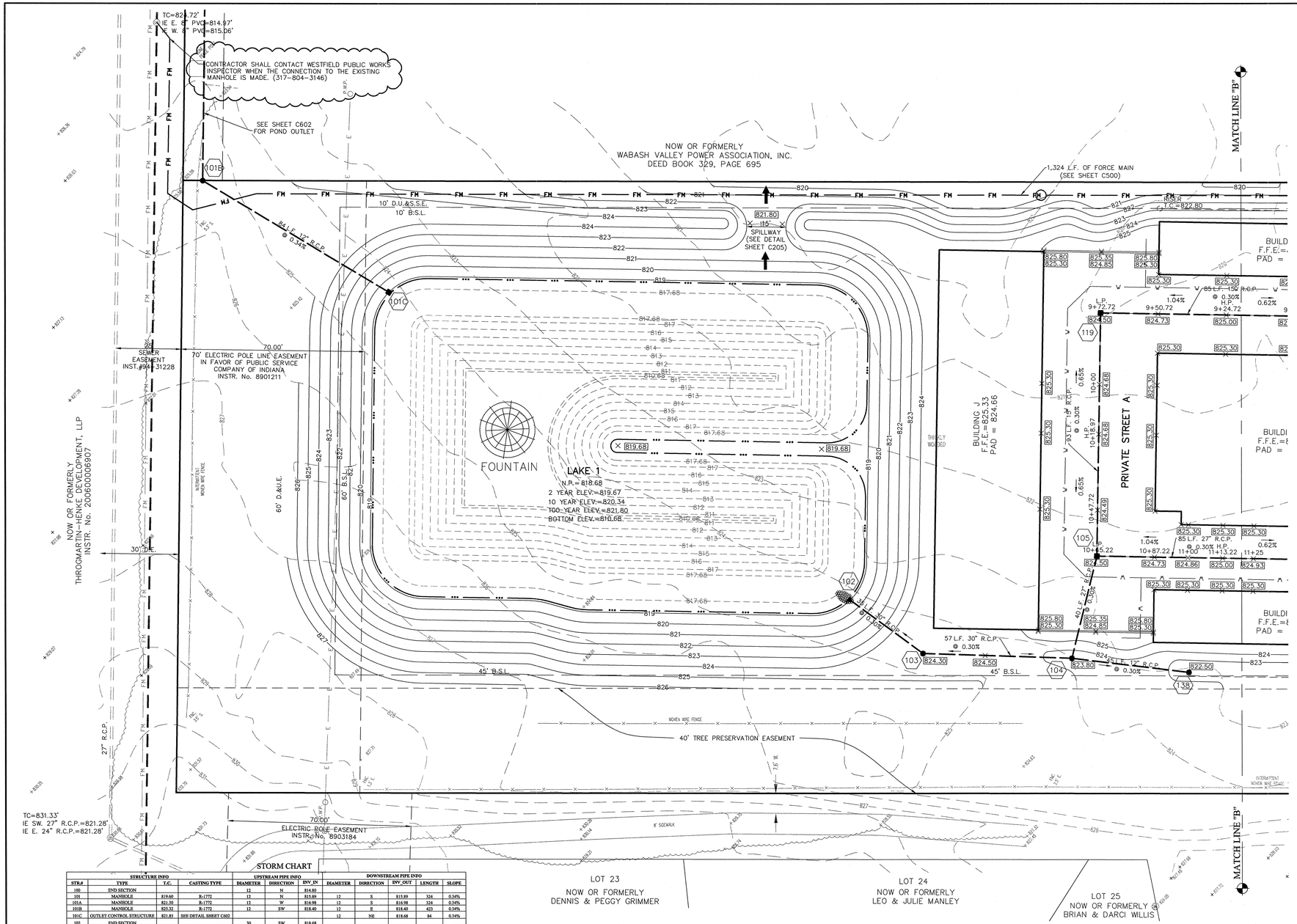

STORM CHART

STRUCTURE INFO				UPSTREAM PIPE INFO			DOWNSTREAM PIPE INFO				
STR.#	TYPE	T.C.	CASTING TYPE	DIAMETER	DIRECTION	INV. IN	DIAMETER	DIRECTION	INV. OUT	LENGTH	SLOPE
100	END SECTION			12	N	814.80					
101	MANHOLE	819.60	R-1772	12	N	815.89	12	S	815.89	324	0.345%
101A	MANHOLE	821.30	R-1772	12	W	816.98	12	S	816.98	324	0.345%
101B	MANHOLE	825.32	R-1772	12	SW	818.40	12	E	818.40	423	0.345%
101C	OUTLET CONTROL STRUCTURE	821.85	SEE DETAIL SHEET C602				12	NE	818.68	84	0.345%
102	END SECTION			30	SW	818.68					
103	YARD INLET	824.30	R-4342	30	S	818.79	30	NE	818.79	35	0.305%
104	YARD INLET	823.80	R-4342	27	SE	818.96	30	N	818.96	57	0.305%
				12	S	818.96					
105	STREET INLET	824.50	R-3405	27	S	819.08	27	NW	819.08	40	0.305%
				15	E	819.08					
106	STREET INLET	824.77	R-3405	27	S	819.33	27	N	819.33	85	0.305%
107	STREET INLET	825.23	R-3405	24	S	819.70	27	N	819.70	122	0.305%
108	STREET INLET	825.42	R-3405	21	E	820.01	24	N	820.01	105	0.305%
				18	S	820.01					
109	STREET INLET	825.42	R-3405	21	S	820.29	21	W	820.29	92	0.305%
				12	W	820.01					
				12	E	820.29					
110	STREET INLET	825.11	R-3405	21	S	820.47	21	N	820.47	59	0.305%
111	STREET INLET	825.55	R-3405	18	S	820.75	21	N	820.73	94	0.305%
112	STREET INLET	825.90	R-3405	18	S	820.98	18	N	820.98	76	0.305%
113	STREET INLET	825.93	R-3405	18	S	821.21	18	N	821.21	76	0.305%
				12	E	821.21					
114	STREET INLET	826.62	R-3405	15	S	821.44	18	N	821.44	78	0.305%
115	STREET INLET	826.62	R-3405	15	S	821.69	15	N	821.69	84	0.305%
116	STREET INLET	825.68	R-3405	12	W	822.01	15	N	822.01	106	0.305%
117	STREET INLET	825.72	R-3405	12	W	822.24	12	E	822.24	75	0.305%
118	YARD INLET	824.50	R-4342				12	E	822.35	38	0.305%
119	STREET INLET	824.50	R-3405	15	S	820.93	15	W	820.93	92	2.00%
120	STREET INLET	824.77	R-3405	12	S	821.18	15	N	821.18	85	0.305%
121	STREET INLET	825.23	R-3405				12	N	821.54	122	0.305%
122	STREET INLET	825.17	R-3405	12	NW	820.11	12	E	820.11	33	0.305%
123	YARD INLET	823.00	R-4342	12	N	820.16	12	SE	820.16	14	0.305%
124	YARD INLET	823.00	R-4342				12	S	820.33	55	0.305%
125	STREET INLET	825.17	R-3405	12	SE	820.49	12	W	820.49	36	0.305%
126	YARD INLET	825.50	R-4342	12	S	820.43	12	NW	820.43	9	0.305%
127	YARD INLET	824.60	R-4342				12	N	820.70	90	0.305%
128	STREET INLET	825.11	R-3405	18	S	820.60	18	N	820.60	59	1.00%
129	STREET INLET	825.55	R-3405	15	S	820.88	18	N	820.88	94	0.305%
130	STREET INLET	825.90	R-3405	15	S	821.11	15	N	821.11	76	0.305%
131	STREET INLET	825.93	R-3405	12	S	821.33	15	N	821.33	76	0.305%
				12	W	821.33					
132	STREET INLET	826.62	R-3405	12	S	822.70	12	N	822.70	78	1.75%
133	STREET INLET	826.62	R-3405				12	N	822.95	84	0.305%
134	STREET INLET	825.70	R-3405	12	S	821.43	12	E	821.43	33	0.305%
135	YARD INLET	825.00	R-4342				12	N	821.49	21	0.305%
136	STREET INLET	825.95	R-3405	12	N	821.35	12	W	821.35	46	0.305%
137	YARD INLET	823.70	R-4342				12	S	821.47	41	0.305%
138	YARD INLET	822.50	R-4342				12	N	819.09	45	0.305%

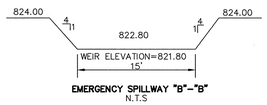

EMERGENCY SPILLWAY "B"-"B"
N.T.S

GENERAL NOTES:

1.) BLUE REFLECTORS SHALL BE INSTALLED IN THE CENTER LINE OF THE PAVEMENT TO MARK FIRE HYDRANTS PER THE CITY OF WESTFIELD'S UTILITY AND INFRASTRUCTURE CONSTRUCTION STANDARDS.

2.) ALL SSD'S (SUBSURFACE DRAINS) WILL NEED TO BE DOUBLE WALL SMOOTH BORE PERFORATED (HDPE) PIPE.

3.) ALL EXISTING OFF-SITE DRAIN TILES THAT ARE ENCOUNTERED SHALL BE TIED INTO THE PROPOSED STORM SEWER SYSTEM WITH A POSITIVE OUTFLOW. ANY TILE THAT IS ENCOUNTERED THAT IS COMPLETELY ON-SITE MUST BE CRUSHED AND ABANDONED.

ALL PADS SHALL BE TESTED TO ASSURE A COMPACTION OF AT LEAST 95 PERCENT OF THE MAXIMUM DRY DENSITY USING THE STANDARD PROCTOR TEST METHOD.

UTILITY CROSSINGS

CONTRACTOR SHALL VERIFY LOCATION AND DEPTH OF ALL EXISTING UTILITIES PRIOR TO CONSTRUCTION TO CONFIRM THERE ARE NO CROSSING CONFLICTS. CONFLICTS THAT ARE DISCOVERED AFTER CONSTRUCTION BEGINS ARE SOLELY THE CONTRACTOR'S RESPONSIBILITY.

BENCHMARK:

Hamilton County Benchmark #55 - Bronze plug in 18" tall 10" x 10" concrete post, 14 feet North of Northeast wingwall, 6 feet East of East edge of pavement on Oak Road, 40 feet ± North of centerline of Cool Creek.

ELEVATION = 810.10 (NAVD '88)

GRAPHIC SCALE

20 0 10 20

(IN FEET)
1 inch = 20 ft.

LEGEND

B.S.L.	Building Setback Line
D&U.E.	Drainage & Utility Easement
D.U.&S.S.E.	Drainage, Utility & Sanitary Sewer Easement
H.P.	High Point
L.P.	Low Point
GRD.CHG	Grade Change
M.E.	Match Existing
F.F.E.	Finish Floor Elevation
W	Existing Water
848	Existing Contour
S	Existing Santiary Sewer
C	Existing Storm Sewer
827.07	Proposed Grade
828	Proposed Contour
FM	Proposed Force Main
S	Proposed Storm Sewer
	Proposed Swale
W	Proposed Water Line
	Pond Emergency Flood Route

HOLEY MOLEY SAYS
"DIG SAFELY"

"IT'S THE LAW"
CALL 2 WORKING DAYS BEFORE YOU DIG
1-800-382-5544
CALL TOLL FREE
PER INDIANA STATE LAW IC8-1-26.
IT IS AGAINST THE LAW TO EXCAVATE WITHOUT NOTIFYING THE UNDERGROUND LOCATION SERVICE TWO (2) WORKING DAYS BEFORE COMMENCING WORK.

CAUTION

LOCATION OF ALL EXISTING UNDERGROUND UTILITIES SHOWN ON THIS PLAN ARE BASED UPON ABOVE GROUND EVIDENCE. (including, but not limited to, manholes, inlets, valves, & marks made upon the ground by others.) AND ARE SPECULATIVE IN NATURE. THERE MAY ALSO BE OTHER EXISTING UNDERGROUND UTILITIES FOR WHICH THERE IS NO ABOVE GROUND EVIDENCE OR FOR WHICH NO ABOVE GROUND EVIDENCE WAS OBSERVED. THE EXACT LOCATIONS OF SAID EXISTING UNDERGROUND UTILITIES SHOULD BE VERIFIED BY THE CONTRACTOR PRIOR TO ANY AND ALL CONSTRUCTION.

DATE	MARK	REVISIONS	BY
3/3/11		REV. BL. AND OUTLET FOR POND	KRG
3/17/11		REVISED NOTE	KRG

JAMES O. RINEHART IV
REGISTERED
No. 10200495
STATE OF INDIANA
PROFESSIONAL ENGINEER

THIS DRAWING IS NOT INTENDED TO BE REPRESENTED AS A RETRACEMENT OR ORIGINAL BOUNDARY SURVEY. A ROUTE SURVEY OR A SURVEYOR LOCATION REPORT.

CERTIFIED: 1/27/11

STOEPPELWERTH & ASSOCIATES, INC.
CONSULTING ENGINEERS & LAND SURVEYORS
7965 East 106th Street, Fishers, IN 46038-2505
Phone: (317) 849-5935 Fax: (317) 849-5942
Toll Free: (800) 728-6917

SITE DEVELOPMENT PLAN
STORAMERICA

WESTFIELD, HAMILTON COUNTY, INDIANA

DRAWN BY: KRG | CHECKED BY: BKR

SHEET NO. C205

S & A JOB NO. 59815RAD

GRAPHIC SCALE

30 0 15 30

(IN FEET)
1 inch = 30 ft.

LEGEND

B.S.L.	Building Setback Line
D&U.E.	Drainage & Utility Easement
D.U.&S.S.E.	Drainage, Utility & Sanitary Sewer Easement
H.P.	High Point
L.P.	Low Point
GRD.CHG	Grade Change
M.E.	Match Existing
F.F.E.	Finish Floor Elevation
	Existing Water
	Existing Contour
	Existing Santiary Sewer
	Existing Storm Sewer
827.07	Proposed Grade
828	Proposed Contour
FM	Proposed Force Main
	Proposed Storm Sewer
	Proposed Swale
W	Proposed Water Line
	Pond Emergency Flood Route

BENCHMARK:

Hamilton County Benchmark #55 - Bronze plug in 18" tall 10" x 10" concrete post, 14 feet North of Northeast wingwall, 6 feet East of East edge of pavement on Oak Road, 40 feet ± North of centerline of Cool Creek.

ELEVATION = 810.10 (NAVD '88)

HOLEY MOLEY SAYS
"DIG SAFELY"

"IT'S THE LAW"
CALL 2 WORKING DAYS BEFORE YOU DIG
1-800-382-5544
CALL TOLL FREE
PER INDIANA STATE LAW IC8-1-26, IT IS AGAINST THE LAW TO EXCAVATE WITHOUT NOTIFYING THE UNDERGROUND LOCATION SERVICE TWO (2) WORKING DAYS BEFORE COMMENCING WORK.

CAUTION

LOCATION OF ALL EXISTING UNDERGROUND UTILITIES SHOWN ON THIS PLAN ARE BASED UPON ABOVE GROUND EVIDENCE, (including, but not limited to, manholes, inlets, valves, & marks made upon the ground by others,) AND ARE SPECULATIVE IN NATURE. THERE MAY ALSO BE OTHER EXISTING UNDERGROUND UTILITIES FOR WHICH THERE IS NO ABOVE GROUND EVIDENCE OR FOR WHICH NO ABOVE GROUND EVIDENCE WAS OBSERVED. THE EXACT LOCATIONS OF SAID EXISTING UNDERGROUND UTILITIES SHOULD BE VERIFIED BY THE CONTRACTOR PRIOR TO ANY AND ALL CONSTRUCTION.

DATE	MARK	REVISIONS	BY

JAMES O. RINEHART IV
REGISTERED
No. 10200495
STATE OF INDIANA
PROFESSIONAL ENGINEER

THIS DRAWING IS NOT INTENDED TO BE REPRESENTED AS A RETRACEMENT OR ORIGINAL BOUNDARY SURVEY, A ROUTE SURVEY, OR A SUBDIVISION LOCATION REPORT.

CERTIFIED: 1/27/11

STOEPPELWERTH & ASSOCIATES, INC.
CONSULTING ENGINEERS & LAND SURVEYORS
7965 East 106th Street, Fishers, IN 46038-2505
Phone: (317) 849-5935 Fax: (317) 849-5942
Toll Free: (800) 728-6917

POND EMERGENCY FLOOD ROUTE

STORAMERICA

HAMILTON COUNTY, INDIANA

WESTFIELD

DRAWN BY:	CHECKED BY:
KRG	BKR

SHEET NO.
C206

S & A JOB NO.
59815RAD

THIS SHEET TO BE USED FOR EROSION CONTROL ONLY.

PERSON ONSITE RESPONSIBLE FOR EROSION CONTROL:
JOHN SULIVAN
REAL AMERICA
(317)-815-5929

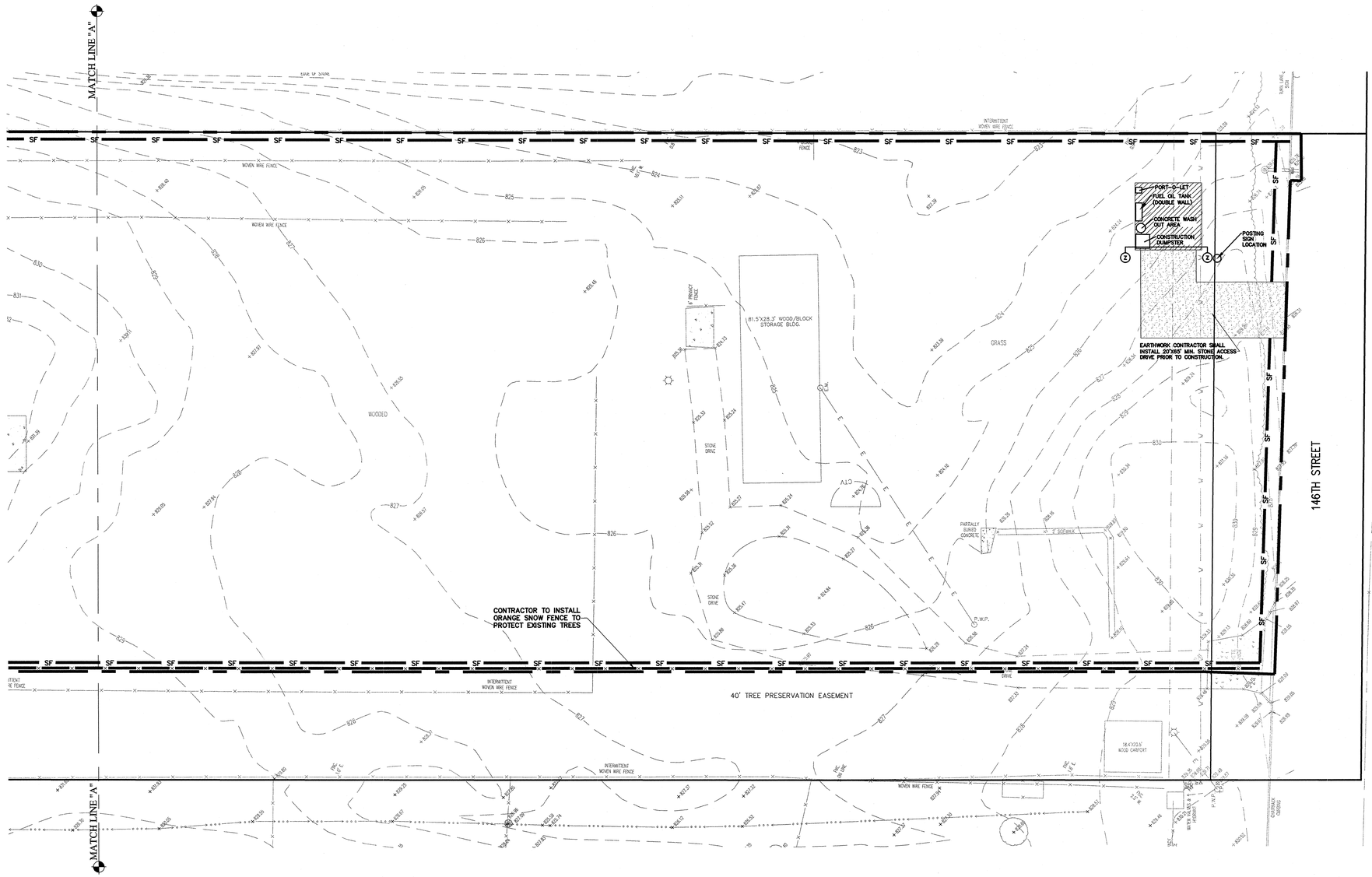

GRAPHIC SCALE

20 0 10 20

(IN FEET)
1 inch = 20 ft.

SF Denotes Silt Fence

Denotes Construction Limits

Denotes Snow Fence

A9. ✳ Specific Points Where Stormwater Discharge Will Leave this Site:
Stormwater will leave this site thru existing storm sewer systems (as shown)

The following is a list in sequence of construction activities to control soil erosion:

1. The contractor shall schedule a Pre-construction meeting with the City of Westfield prior to any constructing on the site being started. The contractor and/or developer shall notify IDEM and the City of Westfield 48 hours prior to start of construction.
2. Following the required pre-construction meeting the contractor shall construct the "posting information center" on the East side of Private Street A, North of 146th Street. The location of the posting information center is shown on Sheet C300. The posting information center is the location where a copy of the approved IDEM Rule 5 Permit, Approved SWPP Plan, signed O&M Manual and Maintenance Logs are to be located. The contractor shall proceed to construct the construction entrance after all posting requirements have been met.
3. Immediately following the installation of the construction entrance, the contractor shall construct the maintenance and refueling area. Please refer to the maintenance and refueling area detail on Sheet C310.
4. After the maintenance and refueling area is constructed, the contractor shall construct the concrete washout area per the specifications on Sheet C310.
5. Prior to any earth moving the contractor shall install all silt fence as shown on Sheets C300 and C302. The details and specifications for silt fence installation are located on Sheet C310.
6. Install snow fence.
7. The contractor shall protect all existing inlets with drop inlet protection baskets and fiber mats as shown on Sheets C300 and C302. The details and specifications for the drop inlet baskets and fiber mats on Sheet C310.
8. When the "existing" site/construction limits are completely stabilized, the contractor shall start striping the existing top soil within the construction limits and utilize in non-structural fill areas
9. Contractor shall excavate the outlet portion of Pond #1 enough to install Outlet Control Structure #101 and the associated pipe as shown on Sheet C601. A Rock horseshoe check dam shall be installed around Structure 101 as shown on Sheet C305.
10. Contractor shall cut proposed swales. Swales shall be immediately seeded and mulched upon completion. At the time of site completion the erosion control blankets shall be installed (See #20 of this sequence).
11. The contractor shall proceed to grade the remainder of the site. The material to grade the site shall be excavated from Pond #1 as shown on Sheet C205. The rock horseshoe check dam around Structure 101 shall be protected at all times during this excavation. If at anytime during construction the horseshoe dam is compromised, the contractor shall address the issues immediately. The banks shall be stabilized immediately following the excavation of required material with an erosion control blanket. Please see Sheet C310 for Erosion Control Staple Pattern Guide.
12. Contractor shall contact Westfield public works inspector when the connection to the existing manhole is made (317-804-3146) or (317-804-3149). Contractor shall excavate around existing manhole and expose the proposed connection point for the force main for this project. The contractor to keep all disturbances to the surrounding area to a minimum. Dirt, mud and debris shall be cleaned up and removed from the streets daily prior to the contractor leaving the site.
13. The contractor shall continue constructing the proposed force main.
14. The proposed onsite storm sewer and sanitary sewer shall be installed concurrently with each other when crossings are encountered.
15. The contractor shall prepare the sub-grade for the proposed road system. If lime stabilization is the method chosen, dust shall be kept to a minimum. Dust shall be removed from the construction vehicles prior to leaving the site.
16. Contractor shall install water main.
17. Contractor shall install all concrete curbing.
18. Contractor shall have all other appropriate utilities installed.
19. Contractor shall install all asphalt pavement.
20. The Contractor shall install the proposed erosion control blanket in all swales as shown on Sheets C306-C308. The details and specifications for the erosion control blanket can be found on Sheet C310.
21. The contractor shall permanent seed all areas between the back of curb and the constructed pads and all other areas that are permanent seed as illustrated on Sheet C306-C308. The seed mixture and rate can be found on Sheet C310.
22. The contractor shall schedule a site inspection with the City of Westfield to insure that the site is stabilized. After the inspector approves the site conditions the contractor shall remove all temporary erosion control practices.
23. The post-construction erosion control practices then become the responsibility of the developer of this project.
24. The developer of this project shall continue to monitor this site for good house keeping on the post-construction BMP's until a NOT is filed with IDEM.

HOLEY MOLEY SAYS
"DIG SAFELY"

"IT'S THE LAW"
CALL 2 WORKING DAYS BEFORE YOU DIG
1-800-382-5544
CALL TOLL FREE
PER INDIANA STATE LAW IC8-1-26, IT IS AGAINST THE LAW TO EXCAVATE WITHOUT NOTIFYING THE UNDERGROUND LOCATION SERVICE TWO (2) WORKING DAYS BEFORE COMMENCING WORK.

CAUTION

LOCATION OF ALL EXISTING UNDERGROUND UTILITIES SHOWN ON THIS PLAN ARE BASED UPON ABOVE GROUND EVIDENCE. (including, but not limited to, manholes, inlets, valves, & marks made upon the ground by others.) AND ARE SPECULATIVE IN NATURE. THERE MAY ALSO BE OTHER EXISTING UNDERGROUND UTILITIES FOR WHICH THERE IS NO ABOVE GROUND EVIDENCE OR FOR WHICH NO ABOVE GROUND EVIDENCE WAS OBSERVED. THE EXACT LOCATIONS OF SAID EXISTING UNDERGROUND UTILITIES SHOULD BE VERIFIED BY THE CONTRACTOR PRIOR TO ANY AND ALL CONSTRUCTION.

BY	DATE	MARK	REVISIONS
KRG	3/17/11	UPDATED SEQUENCE	
KRG	3/3/11	UPDATED CONSTRUCTION SEQUENCE	

JAMES O RINEHART IV
REGISTERED
No. 10200495
STATE OF INDIANA
PROFESSIONAL ENGINEER

THIS DRAWING IS NOT INTENDED TO BE REPRESENTED AS A RETRACEMENT OR ORIGINAL BOUNDARY SURVEY, A ROUTE SURVEY, OR A SURVEYOR LOCATION REPORT.

CERTIFIED: 1/27/11

STOEPPELWERTH & ASSOCIATES, INC.
CONSULTING ENGINEERS & LAND SURVEYORS
7965 East 106th Street, Fishers, IN 46038-2505
Phone: (317) 849-5935 Fax: (317) 849-5942
Toll Free: (800) 728-6917

INITIAL

STORM WATER POLL. & PREV. PLAN

STORAMERICA

HAMILTON COUNTY, INDIANA

WESTFIELD

DRAWN BY:	CHECKED BY:
KRG	BKR

SHEET NO.
C300

S & A JOB NO.
59815RAD

THIS SHEET TO BE USED FOR EROSION CONTROL ONLY.

PERSON ONSITE RESPONSIBLE FOR EROSION CONTROL:
JOHN SULIVAN
REAL AMERICA
(317)-815-5929

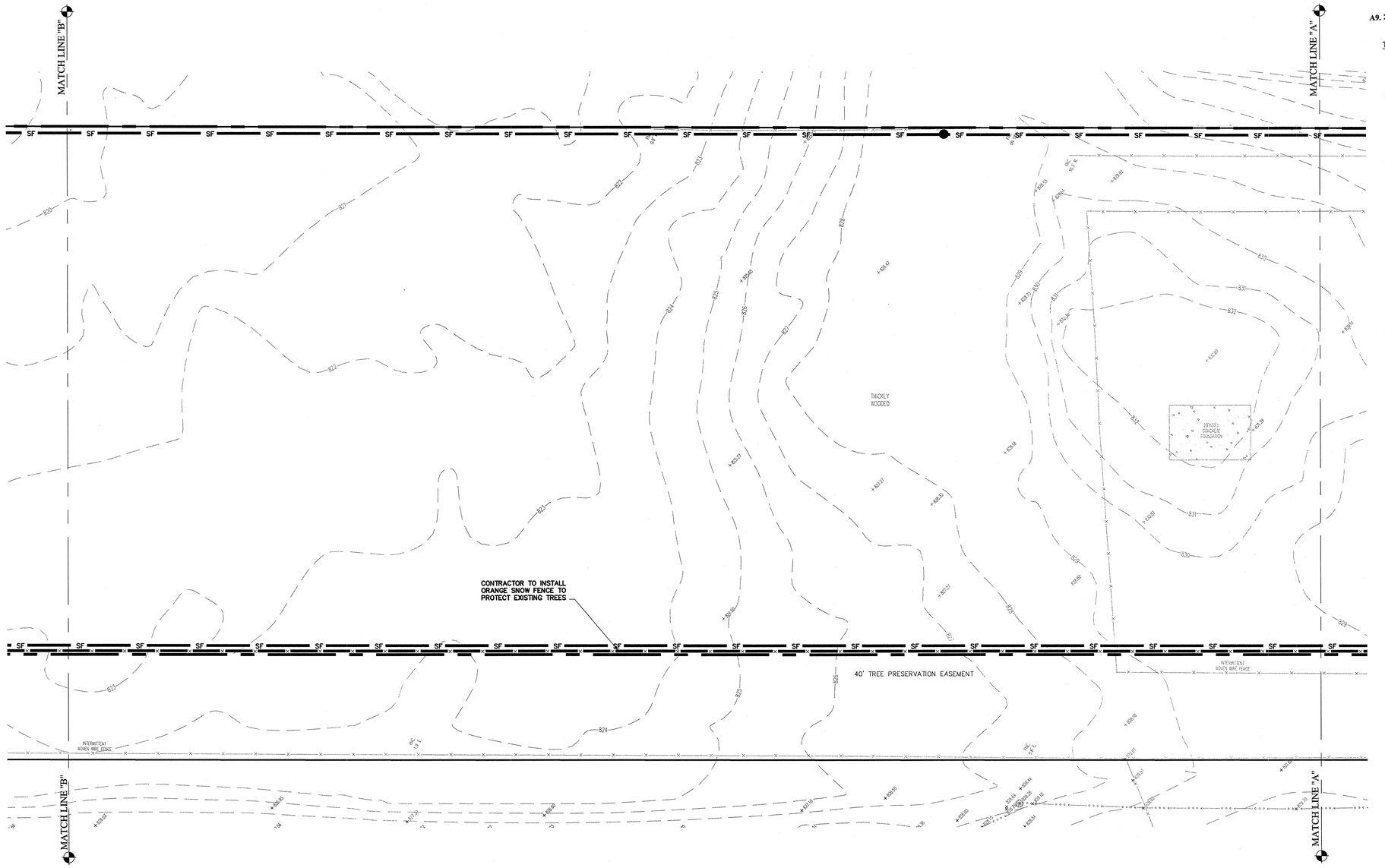

GRAPHIC SCALE

20 0 10 20

(IN FEET)
1 inch = 20 ft.

SF Denotes Silt Fence

Denotes Construction Limits

Denotes Snow Fence

A9. ✳ Specific Points Where Stormwater Discharge Will Leave this Site:
Stormwater will leave this site thru existing storm sewer systems (as shown)

The following is a list in sequence of construction activities to control soil erosion:

1. The contractor shall schedule a Pre-construction meeting with the City of Westfield prior to any constructing on the site being started. The contractor and/or developer shall notify IDEM and the City of Westfield 48 hours prior to start of construction.
2. Following the required pre-construction meeting the contractor shall construct the "posting information center" on the East side of Private Street A, North of 146th Street. The location of the posting information center is shown on Sheet C300. The posting information center is the location where a copy of the approved IDEM Rule 5 Permit, Approved SWPP Plan, signed O&M Manual and Maintenance Logs are to be located. The contractor shall proceed to construct the construction entrance after all posting requirements have been met.
3. Immediately following the installation of the construction entrance, the contractor shall construct the maintenance and refueling area. Please refer to the maintenance and refueling area detail on Sheet C310.
4. After the maintenance and refueling area is constructed, the contractor shall construct the concrete washout area per the specifications on Sheet C310.
5. Prior to any earth moving the contractor shall install all silt fence as shown on Sheets C300 and C302. The details and specifications for silt fence installation are located on Sheet C310.
6. Install snow fence.
7. The contractor shall protect all existing inlets with drop inlet protection baskets and fiber mats as shown on Sheets C300 and C302. The details and specifications for the drop inlet baskets and fiber mats on Sheet C310.
8. When the "existing" site/construction limits are completely stabilized, the contractor shall start striping the existing top soil within the construction limits and utilize in non-structural fill areas
9. Contractor shall excavate the outlet portion of Pond #1 enough to install Outlet Control Structure #101 and the associated pipe as shown on Sheet C601. A Rock horseshoe check dam shall be installed around Structure 101 as shown on Sheet C305.
10. Contractor shall cut proposed swales. Swales shall be immediately seeded and mulched upon completion. At the time of site completion the erosion control blankets shall be installed (See #20 of this sequence).
11. The contractor shall proceed to grade the remainder of the site. The material to grade the site shall be excavated from Pond #1 as shown on Sheet C205. The rock horseshoe check dam around Structure 101 shall be protected at all times during this excavation. If at anytime during construction the horseshoe dam is compromised, the contractor shall address the issues immediately. The banks shall be stabilized immediately following the excavation of required material with an erosion control blanket. Please see Sheet C310 for Erosion Control Staple Pattern Guide.
12. Contractor shall contact Westfield public works inspector when the connection to the existing manhole is made (317-804-3146) or (317-804-3149). Contractor shall excavate around existing manhole and expose the proposed connection point for the force main for this project. The contractor to keep all disturbances to the surrounding area to a minimum. Dirt, mud and debris shall be cleaned up and removed from the streets daily prior to the contractor leaving the site.
13. The contractor shall continue constructing the proposed force main.
14. The proposed onsite storm sewer and sanitary sewer shall be installed concurrently with each other when crossings are encountered.
15. The contractor shall prepare the sub-grade for the proposed road system. If lime stabilization is the method chosen, dust shall be kept to a minimum. Dust shall be removed from the construction vehicles prior to leaving the site.
16. Contractor shall install water main.
17. Contractor shall install all concrete curbing.
18. Contractor shall have all other appropriate utilities installed.
19. Contractor shall install all asphalt pavement.
20. The Contractor shall install the proposed erosion control blanket in all swales as shown on Sheets C306-C308. The details and specifications for the erosion control blanket can be found on Sheet C310.
21. The contractor shall permanent seed all areas between the back of curb and the constructed pads and all other areas that are permanent seed as illustrated on Sheet C306-C308. The seed mixture and rate can be found on Sheet C310.
22. The contractor shall schedule a site inspection with the City of Westfield to insure that the site is stabilized. After the inspector approves the site conditions the contractor shall remove all temporary erosion control practices.
23. The post-construction erosion control practices then become the responsibility of the developer of this project.
24. The developer of this project shall continue to monitor this site for good house keeping on the post-construction BMP's until a NOT is filed with IDEM.

HOLEY MOLEY SAYS
"DIG SAFELY"

"IT'S THE LAW"
CALL 2 WORKING DAYS BEFORE YOU DIG
1-800-382-5544
CALL TOLL FREE
PER INDIANA STATE LAW IC8-1-26, IT IS AGAINST THE LAW TO EXCAVATE WITHOUT NOTIFYING THE UNDERGROUND LOCATION SERVICE TWO (2) WORKING DAYS BEFORE COMMENCING WORK.

CAUTION
LOCATION OF ALL EXISTING UNDERGROUND UTILITIES SHOWN ON THIS PLAN ARE BASED UPON ABOVE GROUND EVIDENCE. (Including, but not limited to, manholes, inlets, valves, & marks made upon the ground by others.) AND ARE SPECULATIVE IN NATURE. THERE MAY ALSO BE OTHER EXISTING UNDERGROUND UTILITIES FOR WHICH THERE IS NO ABOVE GROUND EVIDENCE OR FOR WHICH NO ABOVE GROUND EVIDENCE WAS OBSERVED. THE EXACT LOCATIONS OF SAID EXISTING UNDERGROUND UTILITIES SHOULD BE VERIFIED BY THE CONTRACTOR PRIOR TO ANY AND ALL CONSTRUCTION.

MARK	DATE	REVISIONS	BY
	3/17/11	UPDATED SEQUENCE	KRG
	3/3/11	UPDATED CONSTRUCTION SEQUENCE	KRG

JAMES O RINEHART IV
REGISTERED
No 10200495
STATE OF INDIANA
PROFESSIONAL ENGINEER

THIS DRAWING IS NOT INTENDED TO BE REPRESENTED AS A RETRACEMENT OR ORIGINAL BOUNDARY SURVEY. A ROUTE SURVEY OR A SURVEYOR LOCATION REPORT.

CERTIFIED: 1/27/11

STOEPPELWERTH & ASSOCIATES, INC.
CONSULTING ENGINEERS & LAND SURVEYORS
7965 East 106th Street, Fishers, IN 46038-2505
Phone: (317) 849-5935 Fax: (317) 849-5942
Toll Free: (800) 728-6917

INITIAL

STORM WATER POLL. & PREV. PLAN
STORAMERICA
HAMILTON COUNTY, INDIANA
WESTFIELD

DRAWN BY: KRG | CHECKED BY: BKR

SHEET NO. C301

S & A JOB NO. 59815RAD

THIS SHEET TO BE USED FOR EROSION CONTROL ONLY.

PERSON ONSITE RESPONSIBLE FOR EROSION CONTROL:
JOHN SULIVAN
REAL AMERICA
(317)-815-5929

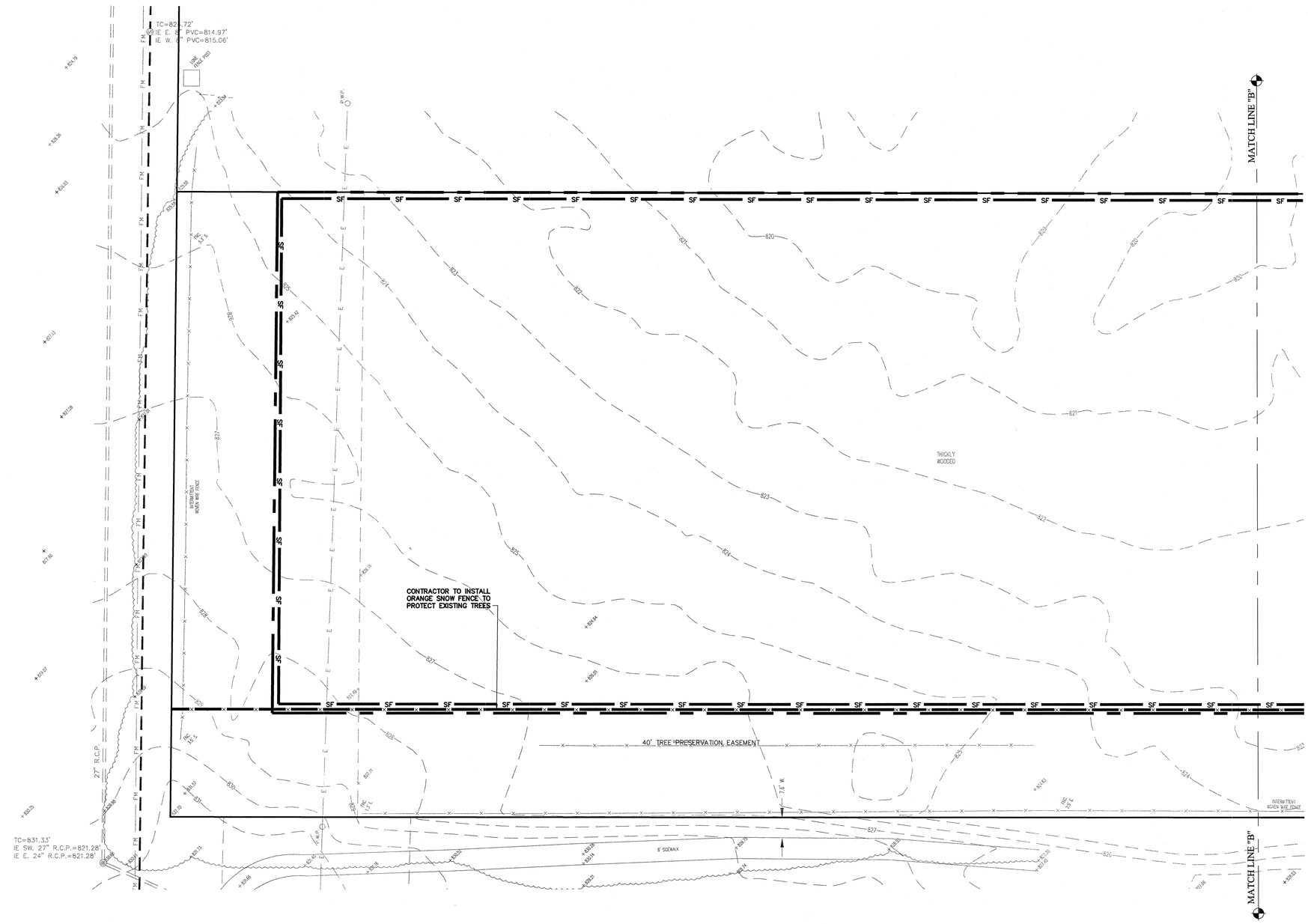

GRAPHIC SCALE

20 0 10 20

(IN FEET)
1 inch = 20 ft.

SF Denotes Silt Fence

Denotes Construction Limits

Denotes Snow Fence

A9. ✳ Specific Points Where Stormwater Discharge Will Leave this Site:
Stormwater will leave this site thru existing storm sewer systems (as shown)

The following is a list in sequence of construction activities to control soil erosion:

1. The contractor shall schedule a Pre-construction meeting with the City of Westfield prior to any constructing on the site being started. The contractor and/or developer shall notify IDEM and the City of Westfield 48 hours prior to start of construction.
2. Following the required pre-construction meeting the contractor shall construct the "posting information center" on the East side of Private Street A, North of 146th Street. The location of the posting information center is shown on Sheet C300. The posting information center is the location where a copy of the approved IDEM Rule 5 Permit, Approved SWPP Plan, signed O&M Manual and Maintenance Logs are to be located. The contractor shall proceed to construct the construction entrance after all posting requirements have been met.
3. Immediately following the installation of the construction entrance, the contractor shall construct the maintenance and refueling area. Please refer to the maintenance and refueling area detail on Sheet C310.
4. After the maintenance and refueling area is constructed, the contractor shall construct the concrete washout area per the specifications on Sheet C310.
5. Prior to any earth moving the contractor shall install all silt fence as shown on Sheets C300 and C302. The details and specifications for silt fence installation are located on Sheet C310.
6. Install snow fence.
7. The contractor shall protect all existing inlets with drop inlet protection baskets and fiber mats as shown on Sheets C300 and C302. The details and specifications for the drop inlet baskets and fiber mats on Sheet C310.
8. When the "existing" site/construction limits are completely stabilized, the contractor shall start striping the existing top soil within the construction limits and utilize in non-structural fill areas
9. Contractor shall excavate the outlet portion of Pond #1 enough to install Outlet Control Structure #101 and the associated pipe as shown on Sheet C601. A Rock horseshoe check dam shall be installed around Structure 101 as shown on Sheet C305.
10. Contractor shall cut proposed swales. Swales shall be immediately seeded and mulched upon completion. At the time of site completion the erosion control blankets shall be installed (See #20 of this sequence).
11. The contractor shall proceed to grade the remainder of the site. The material to grade the site shall be excavated from Pond #1 as shown on Sheet C205. The rock horseshoe check dam around Structure 101 shall be protected at all times during this excavation. If at anytime during construction the horseshoe dam is compromised, the contractor shall address the issues immediately. The banks shall be stabilized immediately following the excavation of required material with an erosion control blanket. Please see Sheet C310 for Erosion Control Staple Pattern Guide.
12. Contractor shall contact Westfield public works inspector when the connection to the existing manhole is made (317-804-3146) or (317-804-3149). Contractor shall excavate around existing manhole and expose the proposed connection point for the force main for this project. The contractor to keep all disturbances to the surrounding area to a minimum. Dirt, mud and debris shall be cleaned up and removed from the streets daily prior to the contractor leaving the site.
13. The contractor shall continue constructing the proposed force main.
14. The proposed onsite storm sewer and sanitary sewer shall be installed concurrently with each other when crossings are encountered.
15. The contractor shall prepare the sub-grade for the proposed road system. If lime stabilization is the method chosen, dust shall be kept to a minimum. Dust shall be removed from the construction vehicles prior to leaving the site.
16. Contractor shall install water main.
17. Contractor shall install all concrete curbing.
18. Contractor shall have all other appropriate utilities installed.
19. Contractor shall install all asphalt pavement.
20. The Contractor shall install the proposed erosion control blanket in all swales as shown on Sheets C306-C308. The details and specifications for the erosion control blanket can be found on Sheet C310.
21. The contractor shall permanent seed all areas between the back of curb and the constructed pads and all other areas that are permanent seed as illustrated on Sheet C306-C308. The seed mixture and rate can be found on Sheet C310.
22. The contractor shall schedule a site inspection with the City of Westfield to insure that the site is stabilized. After the inspector approves the site conditions the contractor shall remove all temporary erosion control practices.
23. The post-construction erosion control practices then become the responsibility of the developer of this project.
24. The developer of this project shall continue to monitor this site for good house keeping on the post-construction BMP's until a NOT is filed with IDEM.

HOLEY MOLEY SAYS
"DIG SAFELY"

"IT'S THE LAW"
CALL 2 WORKING DAYS BEFORE YOU DIG
1-800-382-5544
CALL TOLL FREE
PER INDIANA STATE LAW IC8-1-26.
IT IS AGAINST THE LAW TO EXCAVATE WITHOUT NOTIFYING THE UNDERGROUND LOCATION SERVICE TWO (2) WORKING DAYS BEFORE COMMENCING WORK.

CAUTION

LOCATION OF ALL EXISTING UNDERGROUND UTILITIES SHOWN ON THIS PLAN ARE BASED UPON ABOVE GROUND EVIDENCE (including, but not limited to, manholes, inlets, valves, & marks made upon the ground by others,) AND ARE SPECULATIVE IN NATURE. THERE MAY ALSO BE OTHER EXISTING UNDERGROUND UTILITIES FOR WHICH THERE IS NO ABOVE GROUND EVIDENCE OR FOR WHICH NO ABOVE GROUND EVIDENCE WAS OBSERVED. THE EXACT LOCATIONS OF SAID EXISTING UNDERGROUND UTILITIES SHOULD BE VERIFIED BY THE CONTRACTOR PRIOR TO ANY AND ALL CONSTRUCTION.

MARK	DATE	REVISIONS	BY
	3/17/11	UPDATED SEQUENCE	KRG
	3/3/11	UPDATED SEQUENCE & ADDED SILT FENCE	KRG

JAMES O. RINEHART
REGISTERED
No. 10200495
STATE OF INDIANA
PROFESSIONAL ENGINEER

THIS DRAWING IS NOT INTENDED TO BE REPRESENTED AS A RETRACEMENT OR ORIGINAL BOUNDARY SURVEY, A ROUTE SURVEY OR A SUBDIVISION LOCATION REPORT.

CERTIFIED: 1/27/11

STOEPPELWERTH & ASSOCIATES, INC.
CONSULTING ENGINEERS & LAND SURVEYORS
7965 East 106th Street, Fishers, IN 46038-2505
Phone: (317) 849-5935 Fax: (317) 849-5942
Toll Free: (800) 728-6917

INITIAL

STORM WATER POLL. & PREV. PLAN

STORAMERICA

HAMILTON COUNTY, INDIANA

WESTFIELD

DRAWN BY:	CHECKED BY:
KRG	BKR

SHEET NO.
C302

S & A JOB NO.
59815RAD

THIS SHEET TO BE USED FOR EROSION CONTROL ONLY.

PERSON ONSITE RESPONSIBLE FOR EROSION CONTROL:
JOHN SULIVAN
REAL AMERICA
(317)-815-5929

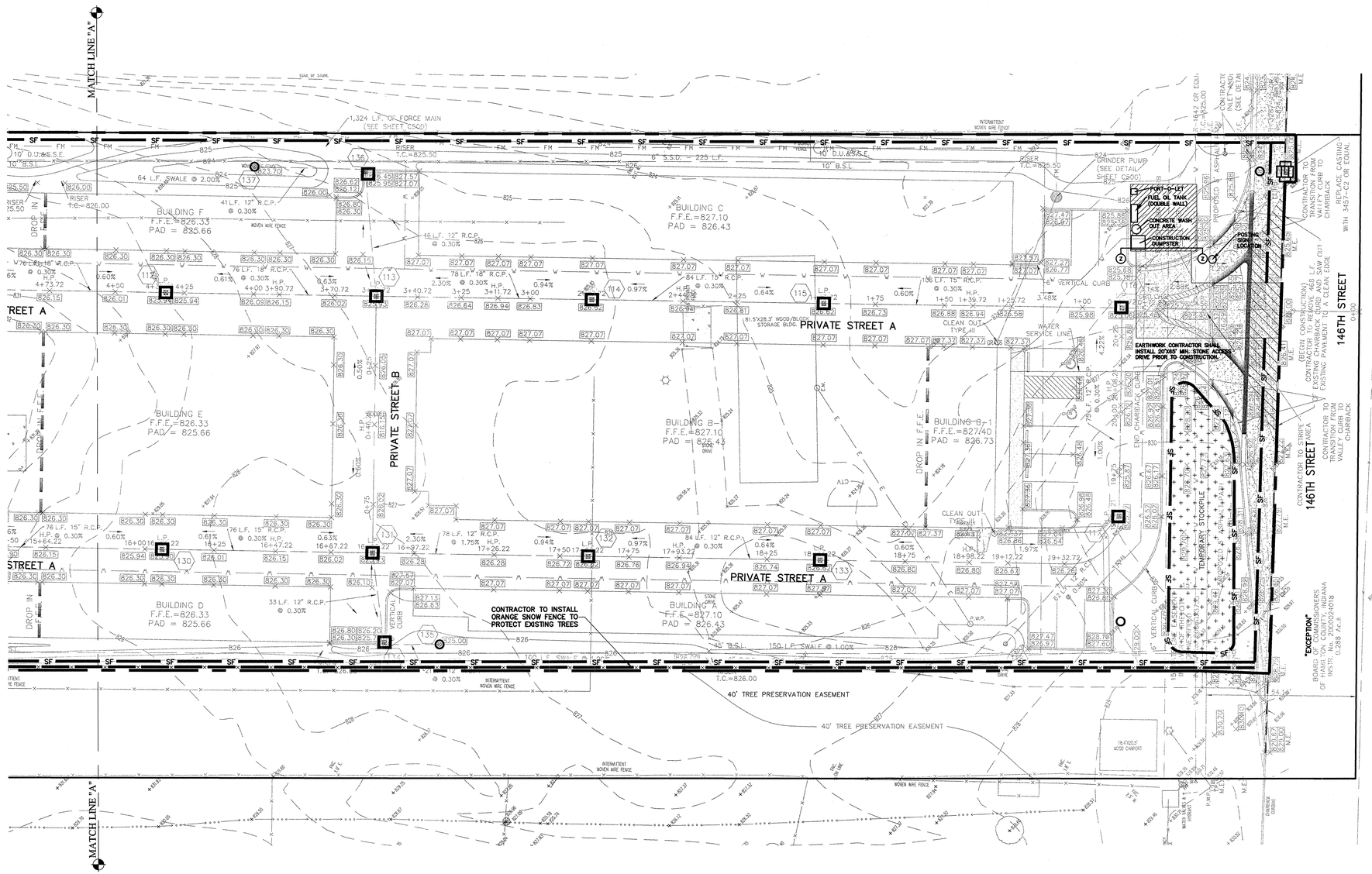

GRAPHIC SCALE

20 0 10 20

(IN FEET)
1 inch = 20 ft.

A9. ✳ Specific Points Where Stormwater Discharge Will Leave this Site:
Stormwater will leave this site thru existing storm sewer systems (as shown)

SF Denotes Silt Fence
Denotes Construction Limits
Denotes Snow Fence
Temporary "Coconut Fiber Mat"
Below Grade "Drop Inlet Protection Basket"
Temporary "Drop Inlet Protection Basket", "Sediment Control Devices",
Denotes Rock Horse Shoe Check Dam

The following is a list in sequence of construction activities to control soil erosion:

1. The contractor shall schedule a Pre-construction meeting with the City of Westfield prior to any constructing on the site being started. The contractor and/or developer shall notify IDEM and the City of Westfield 48 hours prior to start of construction.
2. Following the required pre-construction meeting the contractor shall construct the "posting information center" on the East side of Private Street A, North of 146th Street. The location of the posting information center is shown on Sheet C300. The posting information center is the location where a copy of the approved IDEM Rule 5 Permit, Approved SWPP Plan, signed O&M Manual and Maintenance Logs are to be located. The contractor shall proceed to construct the construction entrance after all posting requirements have been met.
3. Immediately following the installation of the construction entrance, the contractor shall construct the maintenance and refueling area. Please refer to the maintenance and refueling area detail on Sheet C310.
4. After the maintenance and refueling area is constructed, the contractor shall construct the concrete washout area per the specifications on Sheet C310.
5. Prior to any earth moving the contractor shall install all silt fence as shown on Sheets C300 and C302. The details and specifications for silt fence installation are located on Sheet C310.
6. Install snow fence.
7. The contractor shall protect all existing inlets with drop inlet protection baskets and fiber mats as shown on Sheets C300 and C302. The details and specifications for the drop inlet baskets and fiber mats on Sheet C310.
8. When the "existing" site/construction limits are completely stabilized, the contractor shall start striping the existing top soil within the construction limits and utilize in non-structural fill areas
9. Contractor shall excavate the outlet portion of Pond #1 enough to install Outlet Control Structure #101 and the associated pipe as shown on Sheet C601. A Rock horseshoe check dam shall be installed around Structure 101 as shown on Sheet C305.
10. Contractor shall cut proposed swales. Swales shall be immediately seeded and mulched upon completion. At the time of site completion the erosion control blankets shall be installed (See #20 of this sequence).
11. The contractor shall proceed to grade the remainder of the site. The material to grade the site shall be excavated from Pond #1 as shown on Sheet C205. The rock horseshoe check dam around Structure 101 shall be protected at all times during this excavation. If at anytime during construction the horseshoe dam is compromised, the contractor shall address the issues immediately. The banks shall be stabilized immediately following the excavation of required material with an erosion control blanket. Please see Sheet C310 for Erosion Control Staple Pattern Guide.
12. Contractor shall contact Westfield public works inspector when the connection to the existing manhole is made (317-804-3146) or (317-804-3149). Contractor shall excavate around existing manhole and expose the proposed connection point for the force main for this project. The contractor to keep all disturbances to the surrounding area to a minimum. Dirt, mud and debris shall be cleaned up and removed from the streets daily prior to the contractor leaving the site.
13. The contractor shall continue constructing the proposed force main.
14. The proposed onsite storm sewer and sanitary sewer shall be installed concurrently with each other when crossings are encountered.
15. The contractor shall prepare the sub-grade for the proposed road system. If lime stabilization is the method chosen, dust shall be kept to a minimum. Dust shall be removed from the construction vehicles prior to leaving the site.
16. Contractor shall install water main.
17. Contractor shall install all concrete curbing.
18. Contractor shall have all other appropriate utilities installed.
19. Contractor shall install all asphalt pavement.
20. The Contractor shall install the proposed erosion control blanket in all swales as shown on Sheets C306-C308. The details and specifications for the erosion control blanket can be found on Sheet C310.
21. The contractor shall permanent seed all areas between the back of curb and the constructed pads and all other areas that are permanent seed as illustrated on Sheet C306-C308. The seed mixture and rate can be found on Sheet C310.
22. The contractor shall schedule a site inspection with the City of Westfield to insure that the site is stabilized. After the inspector approves the site conditions the contractor shall remove all temporary erosion control practices.
23. The post-construction erosion control practices then become the responsibility of the developer of this project.
24. The developer of this project shall continue to monitor this site for good house keeping on the post-construction BMP's until a NOT is filed with IDEM.

HOLEY MOLEY SAYS
"DIG SAFELY"

"IT'S THE LAW"
CALL 2 WORKING DAYS BEFORE YOU DIG
1-800-382-5544
CALL TOLL FREE
PER INDIANA STATE LAW IC8-1-26, IT IS AGAINST THE LAW TO EXCAVATE WITHOUT NOTIFYING THE UNDERGROUND LOCATION SERVICE TWO (2) WORKING DAYS BEFORE COMMENCING WORK.

CAUTION
LOCATION OF ALL EXISTING UNDERGROUND UTILITIES SHOWN ON THIS PLAN ARE BASED UPON ABOVE GROUND EVIDENCE. (including, but not limited to, manholes, inlets, valves, & marks made upon the ground by others,) AND ARE SPECULATIVE IN NATURE. THERE MAY ALSO BE OTHER EXISTING UNDERGROUND UTILITIES FOR WHICH THERE IS NO ABOVE GROUND EVIDENCE OR FOR WHICH NO ABOVE GROUND EVIDENCE WAS OBSERVED. THE EXACT LOCATIONS OF SAID EXISTING UNDERGROUND UTILITIES SHOULD BE VERIFIED BY THE CONTRACTOR PRIOR TO ANY AND ALL CONSTRUCTION.

DATE	MARK	REVISIONS	BY
3/3/11		UPDATED SEQUENCE	KRG

JAMES O. RINEHART IV
REGISTERED
No. 10200495
STATE OF INDIANA
PROFESSIONAL ENGINEER

THIS DRAWING IS NOT INTENDED TO BE REPRESENTED AS A RETRACEMENT OR ORIGINAL BOUNDARY SURVEY, A ROUTE SURVEY, OR A SUBDIVISION LOCATION REPORT.

CERTIFIED: 1/27/11

STOEPPELWERTH & ASSOCIATES, INC.
CONSULTING ENGINEERS & LAND SURVEYORS
7965 East 106th Street, Fishers, IN 46038-2505
Phone: (317) 849-5935 Fax: (317) 849-5942
Toll Free: (800) 728-6917

TEMPORARY STORM WATER POLL. & PREV. PLAN

STORAMERICA

HAMILTON COUNTY, INDIANA

WESTFIELD

DRAWN BY:	CHECKED BY:
KRG	BKR

SHEET NO.
C303

S & A JOB NO.
59815RAD

THIS SHEET TO BE USED FOR EROSION CONTROL ONLY.

PERSON ONSITE RESPONSIBLE FOR EROSION CONTROL:
JOHN SULIVAN
REAL AMERICA
(317)-815-5929

GRAPHIC SCALE

20 0 10 20

(IN FEET)
1 inch = 20 ft.

A9. * Specific Points Where Stormwater Discharge Will Leave this Site:
Stormwater will leave this site thru existing storm sewer systems (as shown)

SF Denotes Silt Fence

Denotes Construction Limits

Denotes Snow Fence

Below Grade "Drop Inlet Protection Basket"

Temporary "Drop Inlet Protection Basket", "Sediment Control Devices",

Denotes Rock Horse Shoe Check Dam

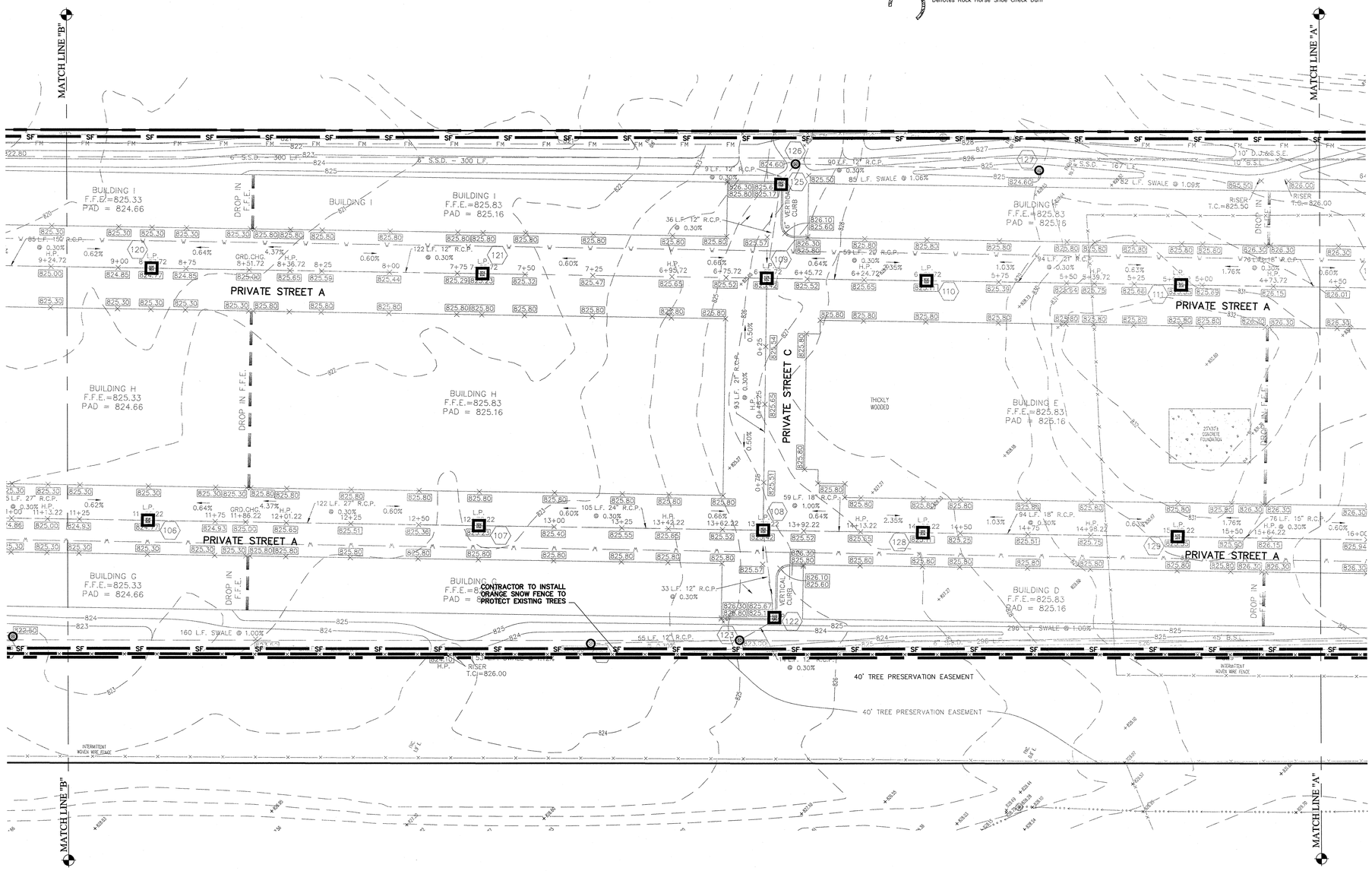

The following is a list in sequence of construction activities to control soil erosion:

1. The contractor shall schedule a Pre-construction meeting with the City of Westfield prior to any constructing on the site being started. The contractor and/or developer shall notify IDEM and the City of Westfield 48 hours prior to start of construction.
2. Following the required pre-construction meeting the contractor shall construct the "posting information center" on the East side of Private Street A, North of 146th Street. The location of the posting information center is shown on Sheet C300. The posting information center is the location where a copy of the approved IDEM Rule 5 Permit, Approved SWPP Plan, signed O&M Manual and Maintenance Logs are to be located. The contractor shall proceed to construct the construction entrance after all posting requirements have been met.
3. Immediately following the installation of the construction entrance, the contractor shall construct the maintenance and refueling area. Please refer to the maintenance and refueling area detail on Sheet C310.
4. After the maintenance and refueling area is constructed, the contractor shall construct the concrete washout area per the specifications on Sheet C310.
5. Prior to any earth moving the contractor shall install all silt fence as shown on Sheets C300 and C302. The details and specifications for silt fence installation are located on Sheet C310.
6. Install snow fence.
7. The contractor shall protect all existing inlets with drop inlet protection baskets and fiber mats as shown on Sheets C300 and C302. The details and specifications for the drop inlet baskets and fiber mats on Sheet C310.
8. When the "existing" site/construction limits are completely stabilized, the contractor shall start striping the existing top soil within the construction limits and utilize in non-structural fill areas
9. Contractor shall excavate the outlet portion of Pond #1 enough to install Outlet Control Structure #101 and the associated pipe as shown on Sheet C601. A Rock horseshoe check dam shall be installed around Structure 101 as shown on Sheet C305.
10. Contractor shall cut proposed swales. Swales shall be immediately seeded and mulched upon completion. At the time of site completion the erosion control blankets shall be installed (See #20 of this sequence).
11. The contractor shall proceed to grade the remainder of the site. The material to grade the site shall be excavated from Pond #1 as shown on Sheet C205. The rock horseshoe check dam around Structure 101 shall be protected at all times during this excavation. If at anytime during construction the horseshoe dam is compromised, the contractor shall address the issues immediately. The banks shall be stabilized immediately following the excavation of required material with an erosion control blanket. Please see Sheet C310 for Erosion Control Staple Pattern Guide.
12. Contractor shall contact Westfield public works inspector when the connection to the existing manhole is made (317-804-3146) or (317-804-3149). Contractor shall excavate around existing manhole and expose the proposed connection point for the force main for this project. The contractor to keep all disturbances to the surrounding area to a minimum. Dirt, mud and debris shall be cleaned up and removed from the streets daily prior to the contractor leaving the site.
13. The contractor shall continue constructing the proposed force main.
14. The proposed onsite storm sewer and sanitary sewer shall be installed concurrently with each other when crossings are encountered.
15. The contractor shall prepare the sub-grade for the proposed road system. If lime stabilization is the method chosen, dust shall be kept to a minimum. Dust shall be removed from the construction vehicles prior to leaving the site.
16. Contractor shall install water main.
17. Contractor shall install all concrete curbing.
18. Contractor shall have all other appropriate utilities installed.
19. Contractor shall install all asphalt pavement.
20. The Contractor shall install the proposed erosion control blanket in all swales as shown on Sheets C306-C308. The details and specifications for the erosion control blanket can be found on Sheet C310.
21. The contractor shall permanent seed all areas between the back of curb and the constructed pads and all other areas that are permanent seed as illustrated on Sheet C306-C308. The seed mixture and rate can be found on Sheet C310.
22. The contractor shall schedule a site inspection with the City of Westfield to insure that the site is stabilized. After the inspector approves the site conditions the contractor shall remove all temporary erosion control practices.
23. The post-construction erosion control practices then become the responsibility of the developer of this project.
24. The developer of this project shall continue to monitor this site for good house keeping on the post-construction BMP's until a NOT is filed with IDEM.

HOLEY MOLEY SAYS
"DIG SAFELY"

"IT'S THE LAW"
CALL 2 WORKING DAYS BEFORE YOU DIG
1-800-382-5544
CALL TOLL FREE
PER INDIANA STATE LAW IC8-1-26. IT IS AGAINST THE LAW TO EXCAVATE WITHOUT NOTIFYING THE UNDERGROUND LOCATION SERVICE TWO (2) WORKING DAYS BEFORE COMMENCING WORK.

CAUTION

LOCATION OF ALL EXISTING UNDERGROUND UTILITIES SHOWN ON THIS PLAN ARE BASED UPON ABOVE GROUND EVIDENCE. (including, but not limited to, manholes, inlets, valves, & marks made upon the ground by others.) AND ARE SPECULATIVE IN NATURE. THERE MAY ALSO BE OTHER EXISTING UNDERGROUND UTILITIES FOR WHICH THERE IS NO ABOVE GROUND EVIDENCE OR FOR WHICH NO ABOVE GROUND EVIDENCE WAS OBSERVED. THE EXACT LOCATIONS OF SAID EXISTING UNDERGROUND UTILITIES SHOULD BE VERIFIED BY THE CONTRACTOR PRIOR TO ANY AND ALL CONSTRUCTION.

DATE	MARK	REVISIONS	BY
3/17/11		UPDATED SEQUENCE	KRG
3/3/11		UPDATED SEQUENCE	KRG

JAMES O. RINEHART
REGISTERED
No. 10200495
STATE OF INDIANA
PROFESSIONAL ENGINEER

THIS DRAWING IS NOT INTENDED TO BE USED AS A BOUNDARY SURVEY. A ROUTE SURVEY OR A SURVEYOR LOCATION REPORT.

CERTIFIED: 1/27/11

STOEPPELWERTH & ASSOCIATES, INC.
CONSULTING ENGINEERS & LAND SURVEYORS
7965 East 106th Street, Fishers, IN 46038-2505
Phone: (317) 849-5935 Fax: (317) 849-5942
Toll Free: (800) 728-6917

TEMPORARY

STORM WATER POLL. & PREV. PLAN

STORAMERICA

HAMILTON COUNTY, INDIANA

WESTFIELD

DRAWN BY: KRG | CHECKED BY: BKR

SHEET NO. C304

S & A JOB NO. 59815RAD

THIS SHEET TO BE USED FOR EROSION CONTROL ONLY.

PERSON ONSITE RESPONSIBLE FOR EROSION CONTROL:
JOHN SULIVAN
REAL AMERICA
(317)-815-5929

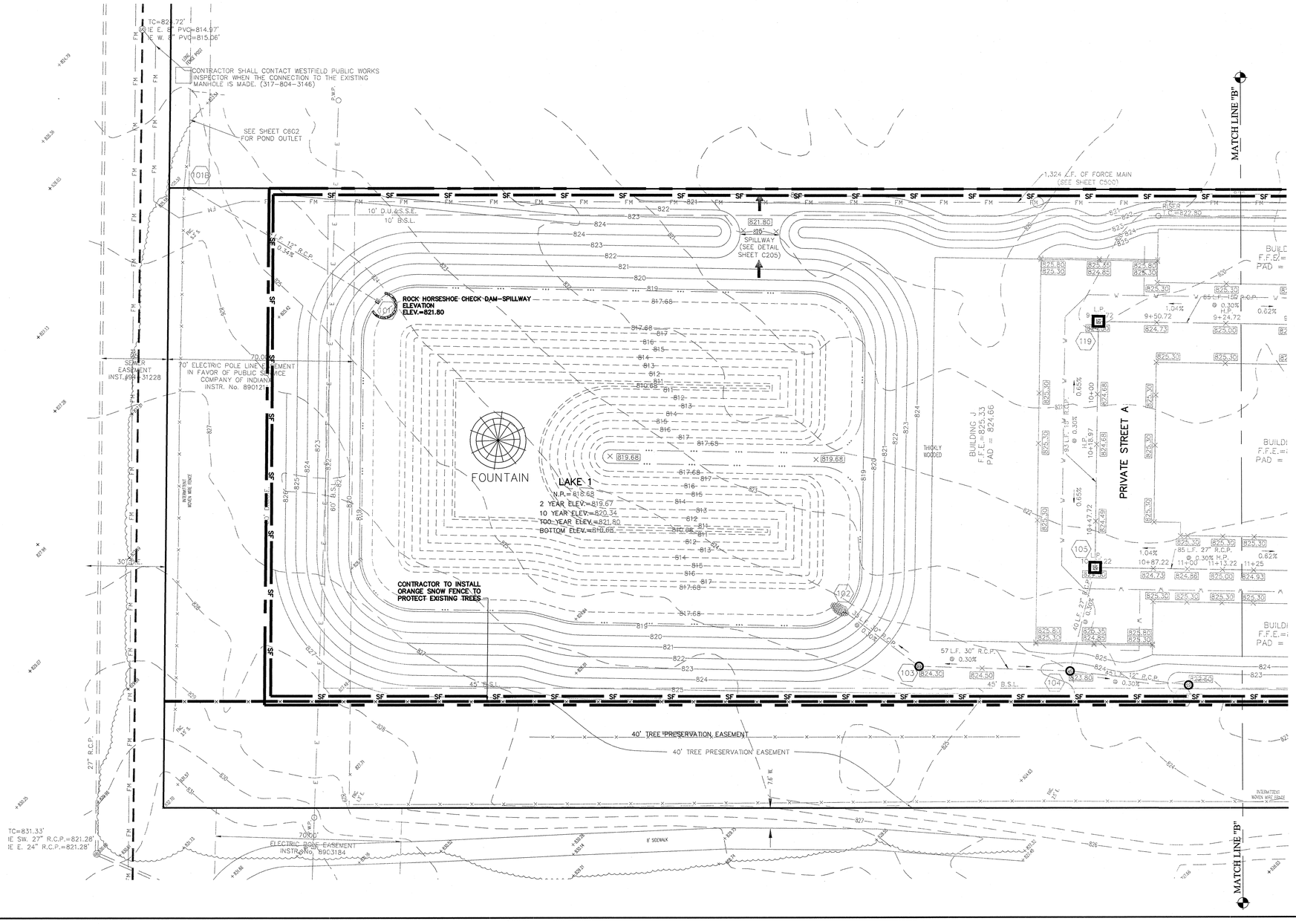

GRAPHIC SCALE

20 0 10 20

(IN FEET)
1 inch = 20 ft.

A9. ✳ Specific Points Where Stormwater Discharge Will Leave this Site:
Stormwater will leave this site thru existing storm sewer systems (as shown)

SF — Denotes Silt Fence

Denotes Construction Limits

Denotes Snow Fence

Below Grade "Drop Inlet Protection Basket"

Temporary "Drop Inlet Protection Basket", "Sediment Control Devices",

Denotes Rock Horse Shoe Check Dam

The following is a list in sequence of construction activities to control soil erosion:

1. The contractor shall schedule a Pre-construction meeting with the City of Westfield prior to any constructing on the site being started. The contractor and/or developer shall notify IDEM and the City of Westfield 48 hours prior to start of construction.
2. Following the required pre-construction meeting the contractor shall construct the "posting information center" on the East side of Private Street A, North of 146th Street. The location of the posting information center is shown on Sheet C300. The posting information center is the location where a copy of the approved IDEM Rule 5 Permit, Approved SWPP Plan, signed O&M Manual and Maintenance Logs are to be located. The contractor shall proceed to construct the construction entrance after all posting requirements have been met.
3. Immediately following the installation of the construction entrance, the contractor shall construct the maintenance and refueling area. Please refer to the maintenance and refueling area detail on Sheet C310.
4. After the maintenance and refueling area is constructed, the contractor shall construct the concrete washout area per the specifications on Sheet C310.
5. Prior to any earth moving the contractor shall install all silt fence as shown on Sheets C300 and C302. The details and specifications for silt fence installation are located on Sheet C310.
6. Install snow fence.
7. The contractor shall protect all existing inlets with drop inlet protection baskets and fiber mats as shown on Sheets C300 and C302. The details and specifications for the drop inlet baskets and fiber mats on Sheet C310.
8. When the "existing" site/construction limits are completely stabilized, the contractor shall start striping the existing top soil within the construction limits and utilize in non-structural fill areas
9. Contractor shall excavate the outlet portion of Pond #1 enough to install Outlet Control Structure #101 and the associated pipe as shown on Sheet C601. A Rock horseshoe check dam shall be installed around Structure 101 as shown on Sheet C305.
10. Contractor shall cut proposed swales. Swales shall be immediately seeded and mulched upon completion. At the time of site completion the erosion control blankets shall be installed (See #20 of this sequence).
11. The contractor shall proceed to grade the remainder of the site. The material to grade the site shall be excavated from Pond #1 as shown on Sheet C205. The rock horseshoe check dam around Structure 101 shall be protected at all times during this excavation. If at anytime during construction the horseshoe dam is compromised, the contractor shall address the issues immediately. The banks shall be stabilized immediately following the excavation of required material with an erosion control blanket. Please see Sheet C310 for Erosion Control Staple Pattern Guide.
12. Contractor shall contact Westfield public works inspector when the connection to the existing manhole is made (317-804-3146) or (317-804-3149). Contractor shall excavate around existing manhole and expose the proposed connection point for the force main for this project. The contractor to keep all disturbances to the surrounding area to a minimum. Dirt, mud and debris shall be cleaned up and removed from the streets daily prior to the contractor leaving the site.
13. The contractor shall continue constructing the proposed force main.
14. The proposed onsite storm sewer and sanitary sewer shall be installed concurrently with each other when crossings are encountered.
15. The contractor shall prepare the sub-grade for the proposed road system. If lime stabilization is the method chosen, dust shall be kept to a minimum. Dust shall be removed from the construction vehicles prior to leaving the site.
16. Contractor shall install water main.
17. Contractor shall install all concrete curbing.
18. Contractor shall have all other appropriate utilities installed.
19. Contractor shall install all asphalt pavement.
20. The Contractor shall install the proposed erosion control blanket in all swales as shown on Sheets C306-C308. The details and specifications for the erosion control blanket can be found on Sheet C310.
21. The contractor shall permanent seed all areas between the back of curb and the constructed pads and all other areas that are permanent seed as illustrated on Sheet C306-C308. The seed mixture and rate can be found on Sheet C310.
22. The contractor shall schedule a site inspection with the City of Westfield to insure that the site is stabilized. After the inspector approves the site conditions the contractor shall remove all temporary erosion control practices.
23. The post-construction erosion control practices then become the responsibility of the developer of this project.
24. The developer of this project shall continue to monitor this site for good house keeping on the post-construction BMP's until a NOT is filed with IDEM.

HOLEY MOLEY SAYS
"DIG SAFELY"

"IT'S THE LAW"
CALL 2 WORKING DAYS BEFORE YOU DIG
1-800-382-5544
CALL TOLL FREE
PER INDIANA STATE LAW IC8-1-26.
IT IS AGAINST THE LAW TO EXCAVATE WITHOUT NOTIFYING THE UNDERGROUND LOCATION SERVICE TWO (2) WORKING DAYS BEFORE COMMENCING WORK.

CAUTION

LOCATION OF ALL EXISTING UNDERGROUND UTILITIES SHOWN ON THIS PLAN ARE BASED UPON ABOVE GROUND EVIDENCE. (including, but not limited to, manholes, inlets, valves, & marks made upon the ground by others.) AND ARE SPECULATIVE IN NATURE. THERE MAY ALSO BE OTHER EXISTING UNDERGROUND UTILITIES FOR WHICH THERE IS NO ABOVE GROUND EVIDENCE OR FOR WHICH NO ABOVE GROUND EVIDENCE WAS OBSERVED. THE EXACT LOCATIONS OF SAID EXISTING UNDERGROUND UTILITIES SHOULD BE VERIFIED BY THE CONTRACTOR PRIOR TO ANY AND ALL CONSTRUCTION.

MARK	DATE	
	3/3/11	UPDATED SEQUENCE AND ADDED SILT FENCE
		REVISIONS
		KRG BY

JAMES O. RINEHART
REGISTERED
No. 10200495
STATE OF INDIANA
PROFESSIONAL ENGINEER

THIS DRAWING IS NOT INTENDED TO BE USED AS A RECORDABLE ORIGINAL BOUNDARY SURVEY. A ROUTE SURVEY OR A SURVEYOR LOCATION REPORT.

CERTIFIED: 1/27/11

STOEPPELWERTH & ASSOCIATES, INC.
CONSULTING ENGINEERS & LAND SURVEYORS
7965 East 106th Street, Fishers, IN 46038-2505
Phone: (317) 849-5935 Fax: (317) 849-5942
Toll Free: (800) 728-6917

TEMPORARY

STORM WATER POLL. & PREV. PLAN

STORAMERICA

WESTFIELD HAMILTON COUNTY, INDIANA

DRAWN BY: KRG | CHECKED BY: BKR

SHEET NO. C305

S & A JOB NO. 59815RAD

THIS SHEET TO BE USED FOR EROSION CONTROL ONLY.

PERSON ONSITE RESPONSIBLE FOR EROSION CONTROL:
JOHN SULIVAN
REAL AMERICA
(317)-815-5929

Seedbed Preparation for Permanent Seeding

1. Test soil to determine pH and nutrient levels. (Contact you county SWCD or Cooperative Extension office for assistance and soils information, including available testing services.)

2. If soil pH is unsuitable for the species to be seeded, apply lime according to test recommendations.

3. Fertilize as recommended by the soil test. If testing was not done, consider applying 400-600 lbs./acre of 12-12-12 analysis, or equivalent, fertilizer.

4. Till the soil to obtain a uniform seedbed, working the fertilizer and lime into the soil 2-4 in. deep with a disk or rake operated across the slope.

NOTE:
1. THE EROSION CONTROL PLAN MUST BE EXECUTED BEFORE ANY CONSTRUCTION COMMENCES.
2. EROSION CONTROL MATERIAL MUST BE APPROVED BY THE WPWD INSPECTORS PRIOR TO INSTALLATION.
3. ADDITIONAL EROSION CONTROL MEASURES MAY BE REQUIRED IN THE FIELD BY THE WPWD INSPECTOR.
4. IF THE SITE REMAINS INACTIVE FOR A PERIOD OF 2 WEEKS , THEN STABILIZATION IS REQUIRED TO TAKE PLACE IN THE FORM OF TEMPORARY SEEDING, MULCH, OR SPRAY ON POLYMER.

GRAPHIC SCALE

20 0 10 20

(IN FEET)
1 inch = 20 ft.

A9. ✱ Specific Points Where Stormwater Discharge Will Leave this Site:
Stormwater will leave this site thru existing storm sewer systems (as shown)

Denotes Construction Limits

Denotes permanent seeding & mulch areas
Seeding rate: 130#/acre or 3#/1000 S.F.
Seeding mixture: 25% creeping red fescue
35% perennial rye
40% Kentucky bluegrass

Denotes seeding w/fiber blanket #S150 by North American Green
Seeding rate: 110#/acre or 2.5#/1000 S.F.
Seeding mixture: 38% Kentucky 31 fescue
19% perennial rye
19% annual rye
14% orchard grass
10% Kentucky bluegrass

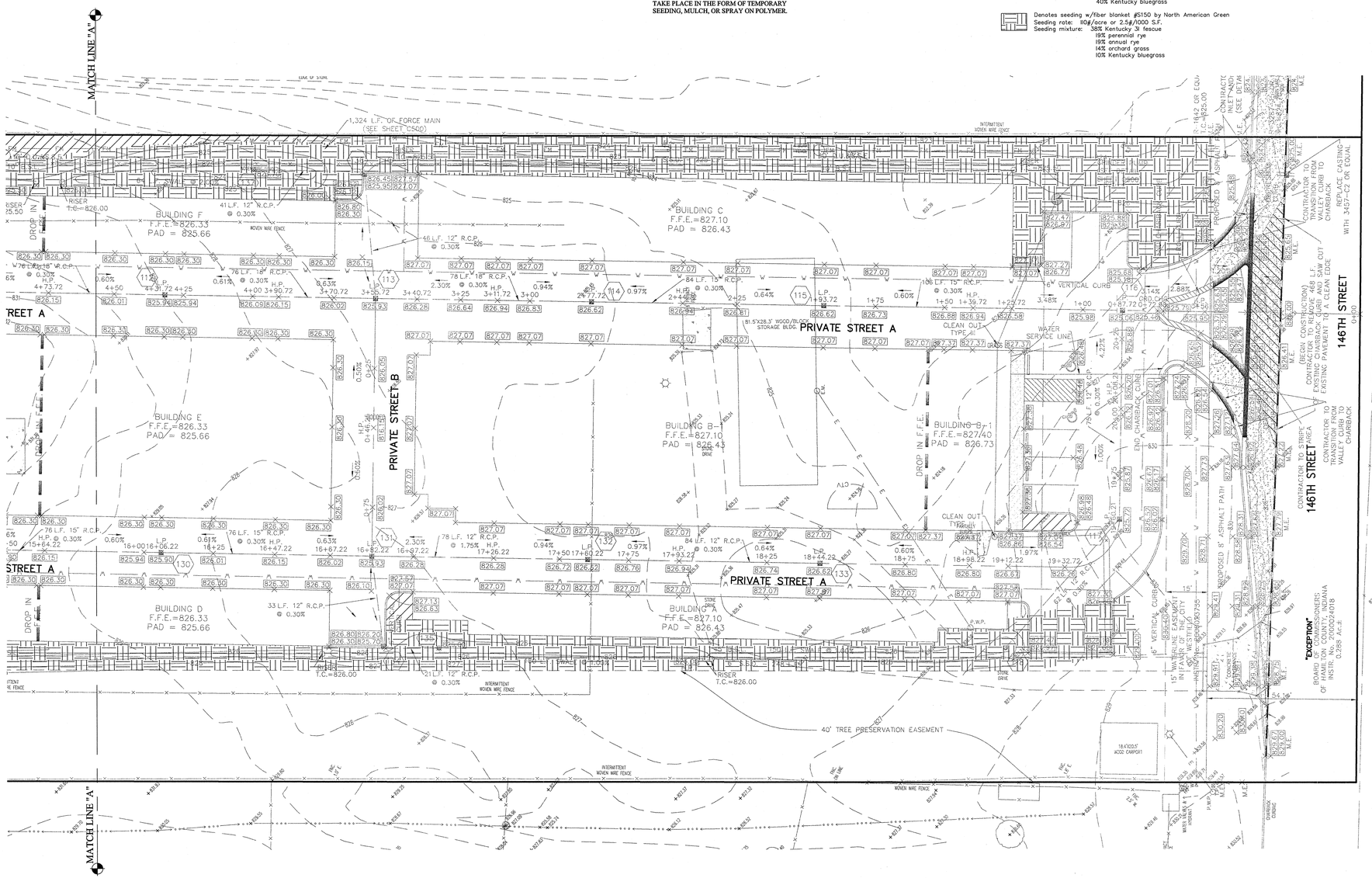

The following is a list in sequence of construction activities to control soil erosion:

1. The contractor shall schedule a Pre-construction meeting with the City of Westfield prior to any constructing on the site being started. The contractor and/or developer shall notify IDEM and the City of Westfield 48 hours prior to start of construction.
2. Following the required pre-construction meeting the contractor shall construct the "posting information center" on the East side of Private Street A, North of 146th Street. The location of the posting information center is shown on Sheet C300. The posting information center is the location where a copy of the approved IDEM Rule 5 Permit, Approved SWPP Plan, signed O&M Manual and Maintenance Logs are to be located. The contractor shall proceed to construct the construction entrance after all posting requirements have been met.
3. Immediately following the installation of the construction entrance, the contractor shall construct the maintenance and refueling area. Please refer to the maintenance and refueling area detail on Sheet C310.
4. After the maintenance and refueling area is constructed, the contractor shall construct the concrete washout area per the specifications on Sheet C310.
5. Prior to any earth moving the contractor shall install all silt fence as shown on Sheets C300 and C302. The details and specifications for silt fence installation are located on Sheet C310.
6. Install snow fence.
7. The contractor shall protect all existing inlets with drop inlet protection baskets and fiber mats as shown on Sheets C300 and C302. The details and specifications for the drop inlet baskets and fiber mats on Sheet C310.
8. When the "existing" site/construction limits are completely stabilized, the contractor shall start striping the existing top soil within the construction limits and utilize in non-structural fill areas
9. Contractor shall excavate the outlet portion of Pond #1 enough to install Outlet Control Structure #101 and the associated pipe as shown on Sheet C601. A Rock horseshoe check dam shall be installed around Structure 101 as shown on Sheet C305.
10. Contractor shall cut proposed swales. Swales shall be immediately seeded and mulched upon completion. At the time of site completion the erosion control blankets shall be installed (See #20 of this sequence).
11. The contractor shall proceed to grade the remainder of the site. The material to grade the site shall be excavated from Pond #1 as shown on Sheet C205. The rock horseshoe check dam around Structure 101 shall be protected at all times during this excavation. If at anytime during construction the horseshoe dam is compromised, the contractor shall address the issues immediately. The banks shall be stabilized immediately following the excavation of required material with an erosion control blanket. Please see Sheet C310 for Erosion Control Staple Pattern Guide.
12. Contractor shall contact Westfield public works inspector when the connection to the existing manhole is made (317-804-3146) or (317-804-3149). Contractor shall excavate around existing manhole and expose the proposed connection point for the force main for this project. The contractor to keep all disturbances to the surrounding area to a minimum. Dirt, mud and debris shall be cleaned up and removed from the streets daily prior to the contractor leaving the site.
13. The contractor shall continue constructing the proposed force main.
14. The proposed onsite storm sewer and sanitary sewer shall be installed concurrently with each other when crossings are encountered.
15. The contractor shall prepare the sub-grade for the proposed road system. If lime stabilization is the method chosen, dust shall be kept to a minimum. Dust shall be removed from the construction vehicles prior to leaving the site.
16. Contractor shall install water main.
17. Contractor shall install all concrete curbing.
18. Contractor shall have all other appropriate utilities installed.
19. Contractor shall install all asphalt pavement.
20. The Contractor shall install the proposed erosion control blanket in all swales as shown on Sheets C306-C308. The details and specifications for the erosion control blanket can be found on Sheet C310.
21. The contractor shall permanent seed all areas between the back of curb and the constructed pads and all other areas that are permanent seed as illustrated on Sheet C306-C308. The seed mixture and rate can be found on Sheet C310.
22. The contractor shall schedule a site inspection with the City of Westfield to insure that the site is stabilized. After the inspector approves the site conditions the contractor shall remove all temporary erosion control practices.
23. The post-construction erosion control practices then become the responsibility of the developer of this project.
24. The developer of this project shall continue to monitor this site for good house keeping on the post-construction BMP's until a NOT is filed with IDEM.

HOLEY MOLEY SAYS
"DIG SAFELY"

"IT'S THE LAW"
CALL 2 WORKING DAYS BEFORE YOU DIG
1-800-382-5544
CALL TOLL FREE
PER INDIANA STATE LAW IC8-1-26. IT IS AGAINST THE LAW TO EXCAVATE WITHOUT NOTIFYING THE UNDERGROUND LOCATION SERVICE TWO (2) WORKING DAYS BEFORE COMMENCING WORK.

CAUTION
LOCATION OF ALL EXISTING UNDERGROUND UTILITIES SHOWN ON THIS PLAN ARE BASED UPON ABOVE GROUND EVIDENCE, (including, but not limited to, manholes, inlets, valves, & marks made upon the ground by others.) AND ARE SPECULATIVE IN NATURE. THERE MAY ALSO BE OTHER EXISTING UNDERGROUND UTILITIES FOR WHICH THERE IS NO ABOVE GROUND EVIDENCE OR FOR WHICH NO ABOVE GROUND EVIDENCE WAS OBSERVED. THE EXACT LOCATIONS OF SAID EXISTING UNDERGROUND UTILITIES SHOULD BE VERIFIED BY THE CONTRACTOR PRIOR TO ANY AND ALL CONSTRUCTION.

BY	DATE	MARK	REVISIONS
KRG	3/3/11	REVISED	EROSION CONTROL BLANKET
KRG	3/17/11	UPDATED	SEQUENCE

JAMES O. RINEHART
REGISTERED
No. 10200495
STATE OF INDIANA
PROFESSIONAL ENGINEER

THIS DRAWING IS NOT INTENDED TO BE USED FOR CONSTRUCTION OF ORIGINAL BOUNDARY SURVEY, A ROUTE SURVEY OR A SURVEYOR LOCATION REPORT.
CERTIFIED: 1/27/11

STOEPPELWERTH & ASSOCIATES, INC.
CONSULTING ENGINEERS & LAND SURVEYORS
7965 East 106th Street, Fishers, IN 46038-2505
Phone: (317) 849-5935 Fax: (317) 849-5942
Toll Free: (800) 728-6917

PERMANENT
STORM WATER POLL. & PREV. PLAN
STORAMERICA
HAMILTON COUNTY, INDIANA
WESTFIELD

DRAWN BY: KRG | CHECKED BY: BKR

SHEET NO. C306

S & A JOB NO. 59815RAD

THIS SHEET TO BE USED FOR EROSION CONTROL ONLY.

PERSON ONSITE RESPONSIBLE FOR EROSION CONTROL:
JOHN SULIVAN
REAL AMERICA
(317)-815-5929

Seedbed Preparation for Permanent Seeding

1. Test soil to determine pH and nutrient levels. (Contact you county SWCD or Cooperative Extension office for assistance and soils information, including available testing services.)

2. If soil pH is unsuitable for the species to be seeded, apply lime according to test recommendations.

3. Fertilize as recommended by the soil test. If testing was not done, consider applying 400-600 lbs./acre of 12-12-12 analysis, or equivalent, fertilizer.

4. Till the soil to obtain a uniform seedbed, working the fertilizer and lime into the soil 2-4 in. deep with a disk or rake operated across the slope.

NOTE:
1. THE EROSION CONTROL PLAN MUST BE EXECUTED BEFORE ANY CONSTRUCTION COMMENCES.
2. EROSION CONTROL MATERIAL MUST BE APPROVED BY THE WPWD INSPECTORS PRIOR TO INSTALLATION.
3. ADDITIONAL EROSION CONTROL MEASURES MAY BE REQUIRED IN THE FIELD BY THE WPWD INSPECTOR.
4. IF THE SITE REMAINS INACTIVE FOR A PERIOD OF 2 WEEKS , THEN STABILIZATION IS REQUIRED TO TAKE PLACE IN THE FORM OF TEMPORARY SEEDING, MULCH, OR SPRAY ON POLYMER.

GRAPHIC SCALE

20 0 10 20

(IN FEET)
1 inch = 20 ft.

A9. ✳ Specific Points Where Stormwater Discharge Will Leave this Site:
Stormwater will leave this site thru existing storm sewer systems (as shown)

Denotes Construction Limits

Denotes permanent seeding & mulch areas
Seeding rate: 130#/acre or 3#/1000 S.F.
Seeding mixture: 25% creeping red fescue
35% perennial rye
40% Kentucky bluegrass

Denotes seeding w/fiber blanket #S150 by North American Green
Seeding rate: 110#/acre or 2.5#/1000 S.F.
Seeding mixture: 38% Kentucky 31 fescue
19% perennial rye
19% annual rye
14% orchard grass
10% Kentucky bluegrass

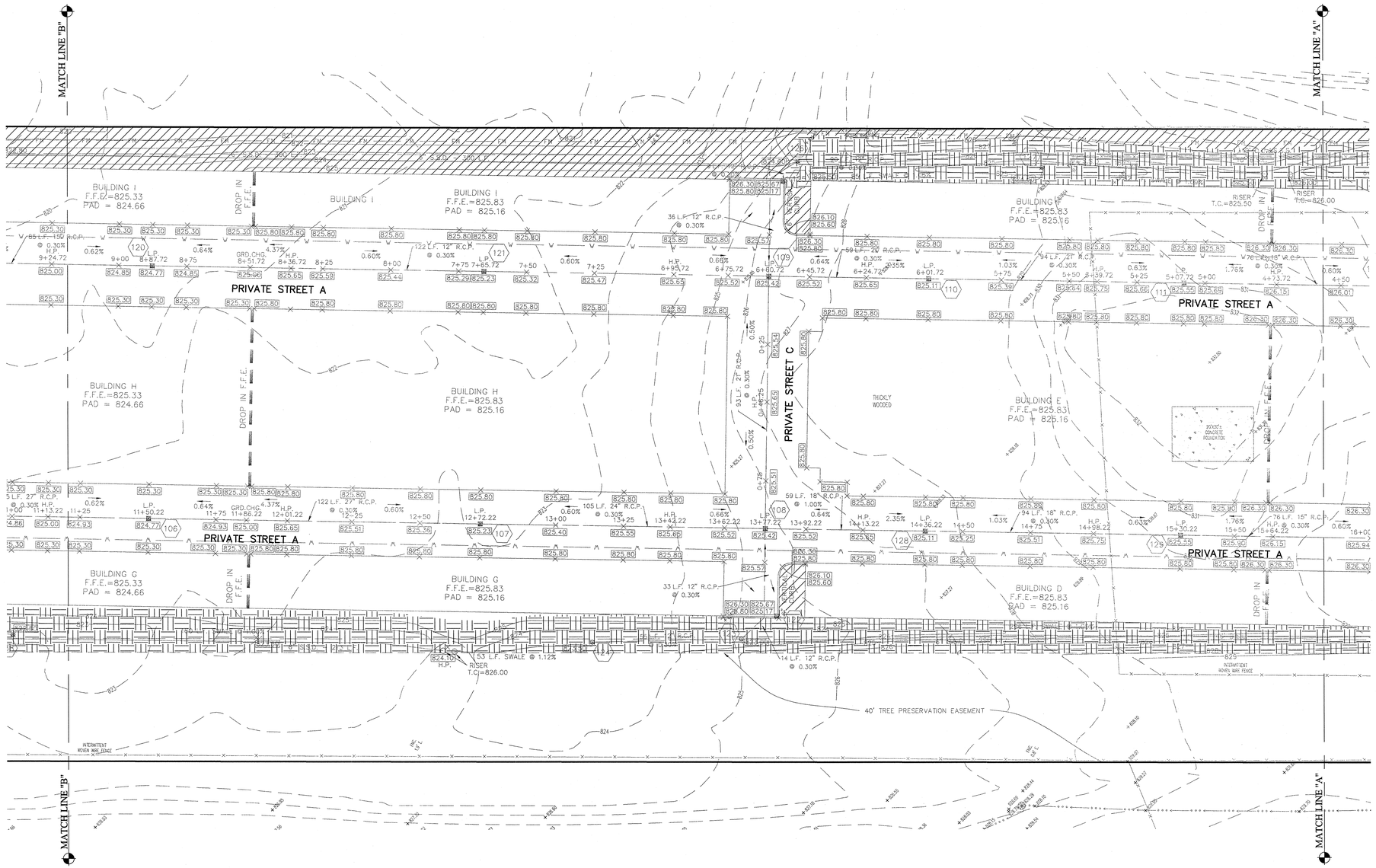

The following is a list in sequence of construction activities to control soil erosion:

1. The contractor shall schedule a Pre-construction meeting with the City of Westfield prior to any constructing on the site being started. The contractor and/or developer shall notify IDEM and the City of Westfield 48 hours prior to start of construction.
2. Following the required pre-construction meeting the contractor shall construct the "posting information center" on the East side of Private Street A, North of 146th Street. The location of the posting information center is shown on Sheet C300. The posting information center is the location where a copy of the approved IDEM Rule 5 Permit, Approved SWPP Plan, signed O&M Manual and Maintenance Logs are to be located. The contractor shall proceed to construct the construction entrance after all posting requirements have been met.
3. Immediately following the installation of the construction entrance, the contractor shall construct the maintenance and refueling area. Please refer to the maintenance and refueling area detail on Sheet C310.
4. After the maintenance and refueling area is constructed, the contractor shall construct the concrete washout area per the specifications on Sheet C310.
5. Prior to any earth moving the contractor shall install all silt fence as shown on Sheets C300 and C302. The details and specifications for silt fence installation are located on Sheet C310.
6. Install snow fence.
7. The contractor shall protect all existing inlets with drop inlet protection baskets and fiber mats as shown on Sheets C300 and C302. The details and specifications for the drop inlet baskets and fiber mats on Sheet C310.
8. When the "existing" site/construction limits are completely stabilized, the contractor shall start striping the existing top soil within the construction limits and utilize in non-structural fill areas
9. Contractor shall excavate the outlet portion of Pond #1 enough to install Outlet Control Structure #101 and the associated pipe as shown on Sheet C601. A Rock horseshoe check dam shall be installed around Structure 101 as shown on Sheet C305.
10. Contractor shall cut proposed swales. Swales shall be immediately seeded and mulched upon completion. At the time of site completion the erosion control blankets shall be installed (See #20 of this sequence).
11. The contractor shall proceed to grade the remainder of the site. The material to grade the site shall be excavated from Pond #1 as shown on Sheet C205. The rock horseshoe check dam around Structure 101 shall be protected at all times during this excavation. If at anytime during construction the horseshoe dam is compromised, the contractor shall address the issues immediately. The banks shall be stabilized immediately following the excavation of required material with an erosion control blanket. Please see Sheet C310 for Erosion Control Staple Pattern Guide.
12. Contractor shall contact Westfield public works inspector when the connection to the existing manhole is made (317-804-3146) or (317-804-3149). Contractor shall excavate around existing manhole and expose the proposed connection point for the force main for this project. The contractor to keep all disturbances to the surrounding area to a minimum. Dirt, mud and debris shall be cleaned up and removed from the streets daily prior to the contractor leaving the site.
13. The contractor shall continue constructing the proposed force main.
14. The proposed onsite storm sewer and sanitary sewer shall be installed concurrently with each other when crossings are encountered.
15. The contractor shall prepare the sub-grade for the proposed road system. If lime stabilization is the method chosen, dust shall be kept to a minimum. Dust shall be removed from the construction vehicles prior to leaving the site.
16. Contractor shall install water main.
17. Contractor shall install all concrete curbing.
18. Contractor shall have all other appropriate utilities installed.
19. Contractor shall install all asphalt pavement.
20. The Contractor shall install the proposed erosion control blanket in all swales as shown on Sheets C306-C308. The details and specifications for the erosion control blanket can be found on Sheet C310.
21. The contractor shall permanent seed all areas between the back of curb and the constructed pads and all other areas that are permanent seed as illustrated on Sheet C306-C308. The seed mixture and rate can be found on Sheet C310.
22. The contractor shall schedule a site inspection with the City of Westfield to insure that the site is stabilized. After the inspector approves the site conditions the contractor shall remove all temporary erosion control practices.
23. The post-construction erosion control practices then become the responsibility of the developer of this project.
24. The developer of this project shall continue to monitor this site for good house keeping on the post-construction BMP's until a NOT is filed with IDEM.

HOLEY MOLEY SAYS
"DIG SAFELY"

"IT'S THE LAW"
CALL 2 WORKING DAYS BEFORE YOU DIG
1-800-382-5544
CALL TOLL FREE
PER INDIANA STATE LAW IC8-1-26.
IT IS AGAINST THE LAW TO EXCAVATE WITHOUT NOTIFYING THE UNDERGROUND LOCATION SERVICE TWO (2) WORKING DAYS BEFORE COMMENCING WORK.

CAUTION

LOCATION OF ALL EXISTING UNDERGROUND UTILITIES SHOWN ON THIS PLAN ARE BASED UPON ABOVE GROUND EVIDENCE. (including, but not limited to, manholes, inlets, valves, & marks made upon the ground by others.) AND ARE SPECULATIVE IN NATURE. THERE MAY ALSO BE OTHER EXISTING UNDERGROUND UTILITIES FOR WHICH THERE IS NO ABOVE GROUND EVIDENCE OR FOR WHICH NO ABOVE GROUND EVIDENCE WAS OBSERVED. THE EXACT LOCATIONS OF SAID EXISTING UNDERGROUND UTILITIES SHOULD BE VERIFIED BY THE CONTRACTOR PRIOR TO ANY AND ALL CONSTRUCTION.

DATE	MARK	REVISIONS	BY
3/17/11		UPDATED SEQUENCE	KRG
3/31/11		UPDATED SEQUENCE	KRG

JAMES O. RINEHART IV
REGISTERED
No. 10200495
STATE OF INDIANA
PROFESSIONAL ENGINEER

THIS DRAWING IS NOT INTENDED TO BE USED AS A RETRACEMENT OR ORIGINAL BOUNDARY SURVEY. A ROUTE SURVEY OR A SURVEYOR LOCATION REPORT.

CERTIFIED: 1/27/11

STOEPPELWERTH & ASSOCIATES, INC.
CONSULTING ENGINEERS & LAND SURVEYORS
7965 East 106th Street, Fishers, IN 46038-2505
Phone: (317) 849-5935 Fax: (317) 849-5942
Toll Free: (800) 728-6917

PERMANENT

STORM WATER POLL. & PREV. PLAN

STORAMERICA

HAMILTON COUNTY, INDIANA

WESTFIELD

DRAWN BY: KRG | CHECKED BY: BKR

SHEET NO. C307

S & A JOB NO. 59815RAD

THIS SHEET TO BE USED FOR EROSION CONTROL ONLY.

PERSON ONSITE RESPONSIBLE FOR EROSION CONTROL:
JOHN SULIVAN
REAL AMERICA
(317)-815-5929

<u>Seedbed Preparation for Permanent Seeding</u>

1. Test soil to determine pH and nutrient levels.
(Contact you county SWCD or Cooperative Extension office for assistance and soils information, including available testing services.)

2. If soil pH is unsuitable for the species to be seeded, apply lime according to test recommendations.

3. Fertilize as recommended by the soil test. If testing was not done, consider applying 400-600 lbs./acre of 12-12-12 analysis, or equivalent, fertilizer.

4. Till the soil to obtain a uniform seedbed, working the fertilizer and lime into the soil 2-4 in. deep with a disk or rake operated across the slope.

NOTE:
1. THE EROSION CONTROL PLAN MUST BE EXECUTED BEFORE ANY CONSTRUCTION COMMENCES.

2. EROSION CONTROL MATERIAL MUST BE APPROVED BY THE WPWD INSPECTORS PRIOR TO INSTALLATION.

3. ADDITIONAL EROSION CONTROL MEASURES MAY BE REQUIRED IN THE FIELD BY THE WPWD INSPECTOR.

4. IF THE SITE REMAINS INACTIVE FOR A PERIOD OF 2 WEEKS , THEN STABILIZATION IS REQUIRED TO TAKE PLACE IN THE FORM OF TEMPORARY SEEDING, MULCH, OR SPRAY ON POLYMER.

GRAPHIC SCALE

20 0 10 20

(IN FEET)
1 inch = 20 ft.

A9. * Specific Points Where Stormwater Discharge Will Leave this Site:
Stormwater will leave this site thru existing storm sewer systems (as shown)

Denotes Construction Limits

Denotes permanent seeding & mulch areas
Seeding rate: 130#/acre or 3#/1000 S.F.
Seeding mixture: 25% creeping red fescue
35% perennial rye
40% Kentucky bluegrass

Denotes seeding w/fiber blanket #S150 by North American Green
Seeding rate: 110#/acre or 2.5#/1000 S.F.
Seeding mixture: 38% Kentucky 31 fescue
19% perennial rye
19% annual rye
14% orchard grass
10% Kentucky bluegrass

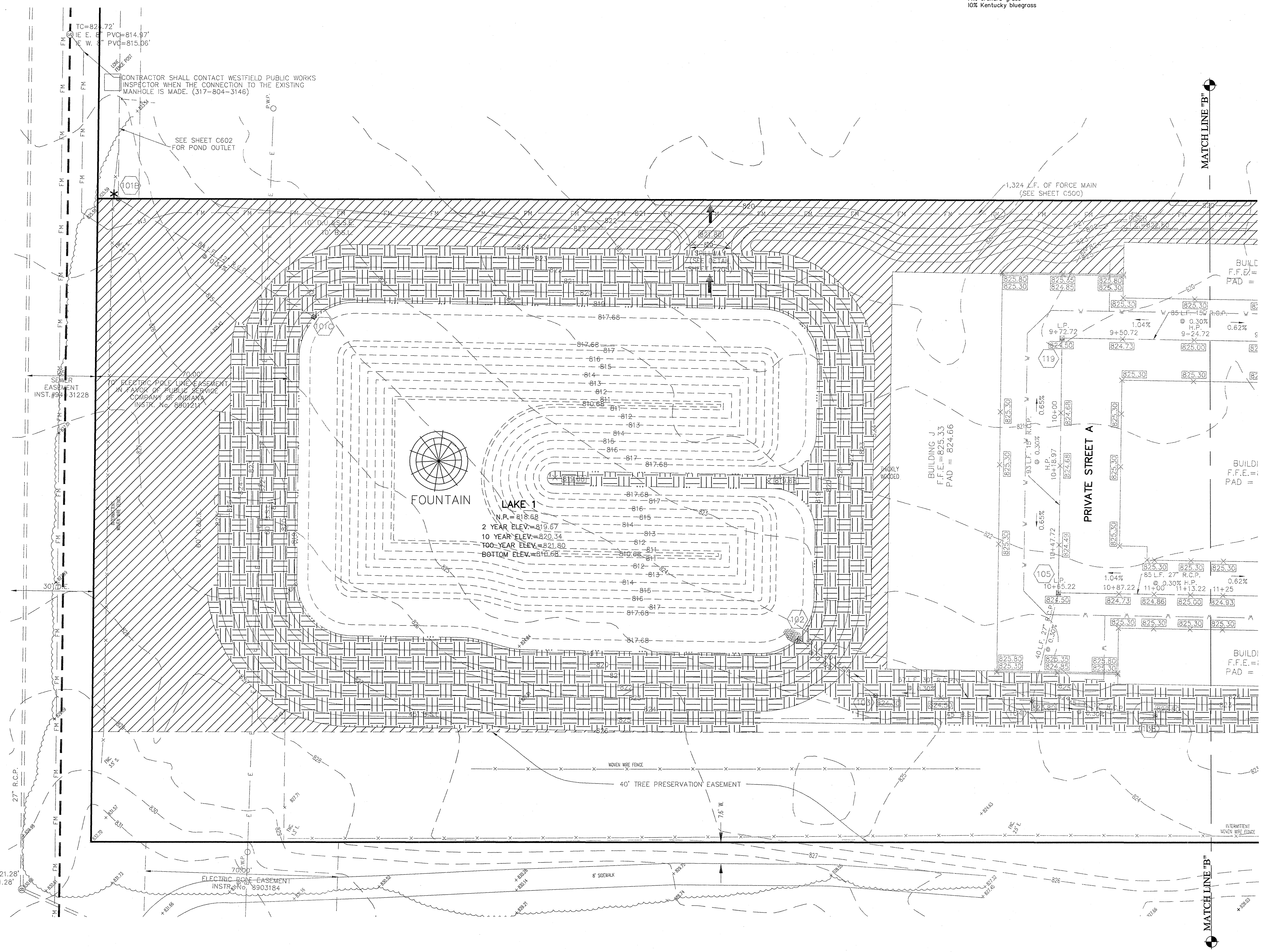

<u>The following is a list in sequence of construction activities to control soil erosion:</u>

1. The contractor shall schedule a Pre-construction meeting with the City of Westfield prior to any constructing on the site being started. The contractor and/or developer shall notify IDEM and the City of Westfield 48 hours prior to start of construction.
2. Following the required pre-construction meeting the contractor shall construct the "posting information center" on the East side of Private Street A, North of 146th Street. The location of the posting information center is shown on Sheet C300. The posting information center is the location where a copy of the approved IDEM Rule 5 Permit, Approved SWPP Plan, signed O&M Manual and Maintenance Logs are to be located. The contractor shall proceed to construct the construction entrance after all posting requirements have been met.
3. Immediately following the installation of the construction entrance, the contractor shall construct the maintenance and refueling area. Please refer to the maintenance and refueling area detail on Sheet C310.
4. After the maintenance and refueling area is constructed, the contractor shall construct the concrete washout area per the specifications on Sheet C310.
5. Prior to any earth moving the contractor shall install all silt fence as shown on Sheets C300 and C302. The details and specifications for silt fence installation are located on Sheet C310.
6. Install snow fence.
7. The contractor shall protect all existing inlets with drop inlet protection baskets and fiber mats as shown on Sheets C300 and C302. The details and specifications for the drop inlet baskets and fiber mats on Sheet C310.
8. When the "existing" site/construction limits are completely stabilized, the contractor shall start striping the existing top soil within the construction limits and utilize in non-structural fill areas
9. Contractor shall excavate the outlet portion of Pond #1 enough to install Outlet Control Structure #101 and the associated pipe as shown on Sheet C601. A Rock horseshoe check dam shall be installed around Structure 101 as shown on Sheet C305.
10. Contractor shall cut proposed swales. Swales shall be immediately seeded and mulched upon completion. At the time of site completion the erosion control blankets shall be installed (See #20 of this sequence).
11. The contractor shall proceed to grade the remainder of the site. The material to grade the site shall be excavated from Pond #1 as shown on Sheet C205. The rock horseshoe check dam around Structure 101 shall be protected at all times during this excavation. If at anytime during construction the horseshoe dam is compromised, the contractor shall address the issues immediately. The banks shall be stabilized immediately following the excavation of required material with an erosion control blanket. Please see Sheet C310 for Erosion Control Staple Pattern Guide.
12. Contractor shall contact Westfield public works inspector when the connection to the existing manhole is made (317-804-3146) or (317-804-3149). Contractor shall excavate around existing manhole and expose the proposed connection point for the force main for this project. The contractor to keep all disturbances to the surrounding area to a minimum. Dirt, mud and debris shall be cleaned up and removed from the streets daily prior to the contractor leaving the site.
13. The contractor shall continue constructing the proposed force main.
14. The proposed onsite storm sewer and sanitary sewer shall be installed concurrently with each other when crossings are encountered.
15. The contractor shall prepare the sub-grade for the proposed road system. If lime stabilization is the method chosen, dust shall be kept to a minimum. Dust shall be removed from the construction vehicles prior to leaving the site.
16. Contractor shall install water main.
17. Contractor shall install all concrete curbing.
18. Contractor shall have all other appropriate utilities installed.
19. Contractor shall install all asphalt pavement.
20. The Contractor shall install the proposed erosion control blanket in all swales as shown on Sheets C306-C308. The details and specifications for the erosion control blanket can be found on Sheet C310.
21. The contractor shall permanent seed all areas between the back of curb and the constructed pads and all other areas that are permanent seed as illustrated on Sheet C306-C308. The seed mixture and rate can be found on Sheet C310.
22. The contractor shall schedule a site inspection with the City of Westfield to insure that the site is stabilized. After the inspector approves the site conditions the contractor shall remove all temporary erosion control practices.
23. The post-construction erosion control practices then become the responsibility of the developer of this project.
24. The developer of this project shall continue to monitor this site for good house keeping on the post-construction BMP's until a NOT is filed with IDEM.

HOLEY MOLEY SAYS
"DIG SAFELY"

"IT'S THE LAW"
CALL 2 WORKING DAYS BEFORE YOU DIG
1-800-382-5544
CALL TOLL FREE
PER INDIANA STATE LAW IC8-1-26.
IT IS AGAINST THE LAW TO EXCAVATE WITHOUT NOTIFYING THE UNDERGROUND LOCATION SERVICE TWO (2) WORKING DAYS BEFORE COMMENCING WORK.

<u>CAUTION</u>

LOCATION OF ALL EXISTING UNDERGROUND UTILITIES SHOWN ON THIS PLAN ARE BASED UPON ABOVE GROUND EVIDENCE. (including, but not limited to, manholes, inlets, valves, & marks made upon the ground by others.) AND ARE SPECULATIVE IN NATURE. THERE MAY ALSO BE OTHER EXISITING UNDERGROUND UTILIITIES FOR WHICH THERE IS NO ABOVE GROUND EVIDENCE OR FOR WHICH NO ABOVE GROUND EVIDENCE WAS OBSERVED. THE EXACT LOCATIONS OF SAID EXISTING UNDERGROUND UTILITIES SHOULD BE VERIFIED BY THE CONTRACTOR PRIOR TO ANY AND ALL CONSTRUCTION.

DATE	MARK	REVISIONS	BY
3/17/11		UPDATED SEQUENCE	KRG
3/3/11		UPDATED SEQUENCE & ADDED BLANKET	KRG

JAMES O. RINEHART IV
REGISTERED
No. 10200495
STATE OF INDIANA
PROFESSIONAL ENGINEER

THIS DRAWING IS NOT INTENDED TO BE REPRESENTED AS A RETRACEMENT OR ORIGINAL BOUNDARY SURVEY, A ROUTE SURVEY OR A SURVEYOR LOCATION REPORT.

CERTIFIED: 1/27/11

STOEPPELWERTH & ASSOCIATES, INC.
CONSULTING ENGINEERS & LAND SURVEYORS
7965 East 106th Street, Fishers, IN 46038-2505
Phone: (317) 849-5935 Fax: (317) 849-5942
Toll Free: (800) 728-6917

PERMANENT
STORM WATER POLL. & PREV. PLAN

STORAMERICA

WESTFIELD HAMILTON COUNTY, INDIANA

DRAWN BY: KRG
CHECKED BY: BKR

SHEET NO.
C308

S & A JOB NO.
59815RAD

THIS SHEET TO BE USED FOR EROSION CONTROL ONLY.

StorAmerica

SITE NAME
The area scheduled for construction is known as "StorAmerica" (hereinafter referred to as the "Project").

PROJECT LOCATION
The property is located on 146th Street on the East side of Settelers Run, Section 1.
Latitude: 40° 00' 09" Longitude: 86° 05' 38" N

OWNER'S INFORMATION
Name: StorAmerica
Address: 111 North Rangeline Road
Representative: Ronda Shrewsbury
Telephone: (317) 815–5929

OPERATOR'S INFORMATION
Name: StorAmerica
Address: 111 North Rangeline Road
Representative: Ronda Shrewsbury
Telephone: (317) 815–5929

NOTICE OF INTENT
All parties defined as owners or operators must submit a Notice of Intent (NOI) at least 48 hours prior to commencement of on–site construction activities. Submittal of late NOI's is not prohibited; however, authorization under the construction general permit is only for discharges that occur after permit coverage is granted. Unpermitted discharges may be subject to enforcement actions by the EPA. For the purposes of this permit, an operator is defined as any party meeting either of the following requirements:

a) The party has operational control over construction plans and specifications, including the ability to make modifications to those plans and specifications.

b) The party has day–to–day operational control of those activities at a project that are necessary to ensure compliance with a stormwater pollution prevention plan for the site or other permit conditions.

A2 – 11" x 17" PLAT
This drawing is attached in the O & M Manual.

A3 – PROJECT NARRATIVE
This project includes the construction of 10 storage Buildings in StorAmerica. StorAmerica consists of approximately 7.07 acres. Construction will include pad grades for the Buildings, associated roadways, landscaping, and drainage infrastructure.

A4 – VICINITY MAP
A copy of the vicinity map is shown on the Title Sheet.

A5 – LEGAL DESCRIPTION OF PROJECT SITE
The site is a part of the following tract of land as described on the Title Sheet.

A6 – LOCATION OF ALL LOTS AND PROPOSED SITE IMPROVEMENTS
The site will be subdivided as shown on the Site Plans. Please refer to sheets C200–C202 for detail.

A7 – HYDROLOGIC UNIT CODE (HUC)
05120201090020 to the Mitchner Ditch

A8 – STATE AND FEDERAL WATER QUALITY PERMITS
IDEM Rule 5

A9 – SPECIFIC POINT WHERE STORMWATER DISCHARGE WILL LEAVE THE SITE
Stormwater discharge will leave through the outlet pipe across the Duke Property and ultimately to the Mitchner Ditch.

A10 – LOCATION AND NAME OF ALL WETLANDS, LAKES, AND WATERCOURSES ON AND ADJACENT TO THE SITE
None

A11 – IDENTIFICATION OF ALL RECEIVING WATERS
Mitchner Ditch

A12 – IDENTIFICATION OF ALL POTENTIAL DISCHARGES TO GROUND WATER
None

A13 – 100–YEAR FLOODPLAINS, FLOODWAYS, AND FLOODWAY FRINGES
The site does not lie within a floodplain, floodway, or floodway fringe. The information was obtained from Flood Insurance Rate Map Panel 18057C0138 F for Hamilton County, Indiana.

A14 – PRE–CONSTRUCTION AND POST–CONSTRUCTION ESTIMATE OF PEAK DISCHARGE
Allowable release rates: 10 Year = 1.06cfs 100 Year = 2.63cfs
Post Construction release rates: 10 Year = 0.96cfs 100 Year = 1.43cfs

A15 – ADJACENT LAND USE
North: Agricultral
East: Agricultral
South: Residential
West: Residential

A16 – LOCATIONS AND APPROXIMATE BOUNDARIES OF ALL DISTURBED AREAS
See sheets C200–C205.

A17 – IDENTIFICATION OF EXISTING VEGETATIVE COVER
As the site is mainly trees.

A18 – SOILS MAP INCLUDING SOIL DESCRIPTIONS AND LIMITATIONS
Soil information from the Hamilton County Soil Survey is shown on sheet C310.

A19 – LOCATIONS, SIZE, AND DIMENSIONS OF PROPOSED STORMWATER SYSTEMS
Locations of stormwater systems: Sheets C203–C205 and C600–C601
Size of storm sewers: Sheet C600–C601.
Details of storm inlets and manholes: Sheets C600–C601 and C801.

A20 – PLANS FOR ANY OFF–SITE CONSTRUCTION ACTIVITIES ASSOCIATED WITH THIS PROJECT
See sheets C203–C205.

A21 – LOCATIONS OF PROPOSED SOIL STOCKPILES AND/OR BORROW/DISPOSAL AREAS
None

A22 – EXISTING SITE TOPOGRAPHY
Refer to Sheets C100–C102.

A23 – PROPOSED FINAL SITE TOPOGRAPHY
Refer to Sheets C203–C205.

B1 – DESCRIPTION OF POTENTIAL POLLUTANT SOURCES ASSOCIATED WITH CONSTRUCTION ACTIVITIES
The following potential pollutant sources may be associated with construction activities on site:
1. Material storage areas (more specifically described below)
2. Construction waste material
3. Fuel storage areas and fueling stations
4. Exposed soils
5. Leaking vehicles and equipment
6. Sanitary waste from temporary toilet facilities
7. Litter
8. Windblown dust
9. Soil tracking off site from construction equipment

The following construction materials will be staged or stored on site at various points during development of the site.

1. Structural fill
2. Road base
3. Concrete drainage pipe
4. Concrete culverts
5. Precast concrete manholes

B2 – SEQUENCE DESCRIBING STORMWATER QUALITY MEASURE IMPLEMENTATION RELATIVE TO LAND–DISTURBING ACTIVITIES

1. The contractor shall schedule a Pre–construction meeting with the City of Westfield prior to any constructing on the site being started. The contractor and/or developer shall notify IDEM and the City of Westfield 48 hours prior to start of construction.
2. Following the required pre–construction meeting the contractor shall construct the "posting information center" on the East side of Private Street A, North of 146th Street. The location of the posting information center is shown on Sheet C300. The posting information center is the location where a copy of the approved IDEM Rule 5 Permit, Approved SWPP Plan, signed O&M Manual and Maintenance Logs are to be located. The contractor shall proceed to construct the construction entrance after all posting requirements have been met.
3. Immediately following the installation of the construction entrance, the contractor shall construct the maintenance and refueling area. Please refer to the maintenance and refueling area detail on Sheet C310.
4. After the maintenance and refueling area is constructed, the contractor shall construct the concrete washout area per the specifications on Sheet C310.
5. Prior to any earth moving the contractor shall install all silt fence as shown on Sheets C300 and C302. The details and specifications for silt fence installation are located on Sheet C310.
6. Install snow fence.
7. The contractor shall protect all existing inlets with drop inlet protection baskets and fiber mats as shown on Sheets C300 and C302. The details and specifications for the drop inlet baskets and fiber mats on Sheet C310.
8. When the "existing" site/construction limits are completely stabilized, the contractor shall start striping the existing top soil within the construction limits and utilize in non–structural fill areas
9. Contractor shall excavate the outlet portion of Pond #1 enough to install Outlet Control Structure #101 and the associated pipe as shown on Sheet C601. A Rock horseshoe check dam shall be installed around Structure 101 as shown on Sheet C305.
10. Contractor shall cut proposed swales. Swales shall be immediately seeded and mulched upon completion. At the time of site completion the erosion control blankets shall be installed (See #20 of this sequence).
11. The contractor shall proceed to grade the remainder of the site. The material to grade the site shall be excavated from Pond #1 as shown on Sheet C205. The rock horseshoe check dam around Structure 101 shall be protected at all times during this excavation. If at anytime during construction the horseshoe dam is compromised, the contractor shall address the issues immediately. The banks shall be stabilized immediately following the excavation of required material with an erosion control blanket. Please see Sheet C310 for Erosion Control Staple Pattern Guide.
12. Contractor shall contact Westfield public works inspector when the connection to the existing manhole is made (317–804–3146) or (317–804–3149). Contractor shall excavate around existing manhole and expose the proposed connection point for the force main for this project. The contractor to keep all disturbances to the surrounding area to a minimum. Dirt, mud and debris shall be cleaned up and removed from the streets daily prior to the contractor leaving the site.
13. The contractor shall continue constructing the proposed force main.
14. The proposed onsite storm sewer and sanitary sewer shall be installed concurrently with each other when crossings are encountered.
15. The contractor shall prepare the sub–grade for the proposed road system. If lime stabilization is the method chosen, dust shall be kept to a minimum. Dust shall be removed from the construction vehicles prior to leaving the site.
16. Contractor shall install water main.
17. Contractor shall install all concrete curbing.
18. Contractor shall have all other appropriate utilities installed.
19. Contractor shall install all asphalt pavement.
20. The Contractor shall install the proposed erosion control blanket in all swales as shown on Sheets C306–C308. The details and specifications for the erosion control blanket can be found on Sheet C310.
21. The contractor shall permanent seed all areas between the back of curb and the constructed pads and all other areas that are permanent seed as illustrated on Sheet C306–C308. The seed mixture and rate can be found on Sheet C310.
22. The contractor shall schedule a site inspection with the City of Westfield to insure that the site is stabilized. After the inspector approves the site conditions the contractor shall remove all temporary erosion control practices.
23. The post–construction erosion control practices then become the responsibility of the developer of this project.
24. The developer of this project shall continue to monitor this site for good house keeping on the post–construction BMP's until a NOT is filed with IDEM.

B3 – STABLE CONSTRUCTION ENTRANCE LOCATIONS AND SPECIFICATIONS
Construction entrance will be in place prior to this phase of construction. Entrance is shown for reference on Sheet C300.

B4 – SEDIMENT CONTROL MEASURES FOR SHEET FLOW AREAS
Sheet flow areas will be protected by seed and mulch or hydroseeding. Erosion control blankets will be installed on sloped areas where the slope exceeds 6:1 (horizontal to vertical). Silt fencing will be utilized to minimize runoff from construction areas as identified on Sheets C300–C302.

Refer to Sheet C310 for details.

B5 – SEDIMENT CONTROL MEASURES FOR CONCENTRATED FLOW AREAS
The swales will be protected with an erosion control blanket immediatly following their construction as shown on sheets C306–C308.

B6 – STORM SEWER INLET PROTECTION MEASURE LOCATIONS AND SPECIFICATIONS
The contractor has the option to use one of several storm sewer inlet protection methods, depending on the inlet location and the stage of construction. Refer to Sheets C303–C305 for locations and refer to Sheet C304 for details. Manufactured products such as the Catch–All products may also be used at the contractor's discretion. Manufactured products shall be installed in accordance with the manufacturer's specifications. Straw bales will not be allowed as inlet protection measures. Coconut fiber mats are recommended.

B7 – RUNOFF CONTROL MEASURES
The silt fencing will be utilized to slow runoff and minimize sediment discharge. Refer to Sheets C300–C302 for additional information.

B8 – STORMWATER OUTLET PROTECTION SPECIFICATIONS
Riprap horse shoe dams shall protect the existing inlet where the proposed storm sewer is to connect. See sheets C300–C302 for additional information.

B9 – GRADE STABILIZATION STRUCTURE LOCATIONS AND SPECIFICATIONS
Grade Stabilization locations and specifications.
C300–C304 for additional information.

B10 – LOCATION, DIMENSIONS, SPECIFICATIONS, AND CONSTRUCTION DETAILS OF EACH STORMWATER QUALITY MEASURE
Each measure is shown on along with appropriate details and specifications. Shown on Sheed C310.

B11 – TEMPORARY SURFACE STABILIZATION METHODS APPROPRIATE FOR EACH SEASON
Refer to Sheet C310, within the Seasonal Soil Protection Chart.

B12 – PERMANENT SURFACE STABILIZATION SPECIFICATIONS
Refer to Sheet C310, within the Seasonal Soil Protection Chart.

B13 – MATERIAL HANDLING AND SPILL PREVENTION PLAN

Solid Waste Disposal

No solid material, including building materials, is permitted to be discharged to surface waters or buried on site. All solid waste materials, including disposable materials incidental to the construction activity, must be collected in containers or closed dumpsters. The collection containers must be emptied periodically and the collected material hauled to a landfill permitted by the State and/or appropriate local municipality to accept the waste for disposal.

A foreman or supervisor should be designated in writing to oversee, enforce, and instruct construction workers on proper solid waste procedures.

Hazardous Waste

Whenever possible, minimize the use of hazardous materials and generation of hazardous wastes. All hazardous waste materials will be disposed in the manner specified by federal, state, or local regulations or by the manufacturer.

Use containment berms in fueling and maintenance areas and where potential for spills is high.

A foreman or supervisor should be designated in writing to oversee, enforce and instruct construction workers on proper hazardous waste procedures. The location of any hazardous waste storage areas should be indicated on the stormwater pollution prevention plan by the operator following on–site location of the facility.

Dust Control/Off–site Vehicle Tracking
During construction, water trucks should be used, as needed, by each contractor or subcontractor to reduce dust. After construction, the site should be stabilized to reduce dust.
Construction traffic should enter and exit the site at a Construction Entrance with a rock pad or equivalent device. The purpose of the rock pad is to minimize the amount of soil and mud that is tracked into existing streets. If sediment escapes the construction site, off–site accumulations of sediment must be removed at a frequency sufficient to minimize offsite impacts.

Sanitary/Septic

Contractors and subcontractors must comply with all state and local sanitary sewer, portable toilet, or septic system regulations. Sanitary facilities shall be provided at the site by each contractor or subcontractor throughout construction activities. The sanitary facilities should be utilized by all construction personnel and be serviced regularly. All expenses associated with providing sanitary facilities are the responsibility of the contractors and subcontractors.

The location of any sanitary facilities should be indicated on the stormwater pollution prevention plan by the operator following on–site location of said facilities.

Water Source

Water used to establish and maintain grass, to control dust, and for other construction purposes must originate from a public water supply or private well approved by the State or local health department.

Equipment Fueling and Storage Areas

Equipment fueling, maintenance, and cleaning should only be completed in protected areas (i.e., bermed area). Leaking equipment and maintenance fluids will be collected and not allowed to discharge into soil where they may be washed away during a rain event.

Equipment wash down (except for wheel washes) should take place within an area surrounded by a berm. The use of detergents is prohibited.

Hazardous Material Storage

Chemicals, paints, solvents, fertilizers, and other toxic or hazardous materials should be stored in their original containers (if original container is not resealable, store the products in clearly labeled, waterproof containers). Except during application, the containers should be kept in trucks or in bermed areas within covered storage facilities. Runoff containing such materials shall be collected, removed from the site, and disposed of in accordance with the federal, state, and local regulations.

As may be required by federal, state, or local regulations, the Contractor should have a Hazardous Materials Management Plan and/or Hazardous Materials Spill Prevention Program in place. A foreman or supervisor should be designated in writing to oversee, enforce, and instruct construction workers on proper hazardous materials storage and handling procedures. The location of any hazardous material storage areas should be indicated on the stormwater pollution prevention plan by the operator following on–site location of the storage areas.

Spill Response Directions

In the event of small spills, please contact the construction supervisor. In the event of spills that require removal of soils or other materials, please contact the construction supervisor, developer, County Surveyor's Office and the Local Fire Department.

In the event of spills that have potential groundwater or surface water contamination, please contact the construction supervisor, developer, County Surveyor's Office, Local Fire Department and IDEM.

CONTACT NUMBERS:

Emergency Response	911
Westfield Fire Department	(317) 804–3333
Westfield Police Department	(317) 804–3200
Indiana Department of Natural Resources	(317) 477–8773
Indiana Department of Environmental Management	(317) 233–7745
Hamilton County Soil and Water	(317) 773–2181
StorAmerica	(317) 815–5929
Hamilton County Surveyor's Office	(317) 776–8495

B14 – MONITORING AND MAINTENANCE GUIDELINES FOR EACH PROPOSED STORMWATER QUALITY MEASURE

Inspection Schedule/Reporting

All impacted areas, as well as all erosion and sediment control devices, will be inspected every seven (7) calendar days and within 24 hours after a rainfall of 0.5 inch or greater. Where sites have been final or temporarily stabilized or on sites where runoff is unlikely due to winter conditions (e.g., site is covered with snow, ice, or frozen ground exists), such inspections shall be conducted at lease once every month.

Inspections shall be conducted and a written report prepared, by a designated and qualified person familiar with the USEPA NPDES Storm Water General Permit, and the Project.

Inspection reports shall be completed including scope of the inspection, name(s) and qualifications of personnel making the inspection, the date of the inspection, observations relating to the implementation of the SWPPP, and any actions taken as a result of incidents of noncompliance noted during the inspection. The inspection report should state whether the site was in compliance or identify any incidents of noncompliance. The contractor shall keep a copy of the inspection reports on site and permanently for a period of two years following construction. The on–site reports may be requested by inspections conducted by the local MS–4.

Construction Entrance

Locations where vehicles exit the site shall be inspected for evidence of off–site sediment tracking. Each contractor and subcontractor shall be responsible for maintaining the Construction Entrance and other controls.

Material Storage Inspections

Inspectors must evaluate areas used for storage of materials that are exposed to precipitation. The purpose is to ensure that materials are protected and/or impounded so that pollutants cannot discharge from storage areas. Off–site material storage areas used solely by the subject project are considered to be part of the project and must be included in the erosion control plans and the site inspection reports.

Soil Stabilization Inspections

Seeded areas will be inspected to confirm that a healthy stand of vegetation is maintained. The site has achieved final stabilization once all areas are covered with pavement on have a stand of vegetation with at least 70% of the background vegetation density. The density of 70% or greater must be maintained to be considered as stabilized. The operator or their representative will water, fertilize, and reseed disturbed areas as needed to achieve this goal.

Erosion and Sediment Control Inspections

All controls should be inspected at least once every seven (7) calendar days and following any storm event of 0.5 inch or greater. The following is a list of inspection/maintenance practices that will be used for specific controls:

1. Geotextiles/Erosion Control Mats: Missing or loose matting must be replaced or re–anchored.

2. Inlet Protection: Sediment should be removed when it reaches approximately one–half the height of the fence. If a sump is used, sediment should be removed when the volume of the basin is reduced by 50%.

3. Mulching: Inspected for thin or bare spots caused by natural decomposition or weather–related events. Mulch in high traffic area should be replaced on a regular basis to maintain uniform protection.

4. Silt Fence: Removal of built–up sediment will occur when the sediment reaches one–third the height of the fence.

5. Stabilized Construction Entrance: Periodic regrading and top dressing with additional stones.

6. Vegetation: Protect newly seeded areas from excessive runoff and traffic until vegetation is established. Establish a watering and fertilizing schedule.

7. Good Housekeeping: Litter, construction debris, and construction chemicals exposed to stormwater shall be prevented from becoming a pollutant source for stormwater discharges through screening of outfalls and daily pickup of litter.

In the event that sediment escapes the construction site, off–site accumulations of sediment must be removed at a frequency sufficient to minimize adverse impacts. An example of this may be the situation where sediment has washed into the street and could be carried into the storm sewers by the next rainfall and/or pose a safety hazard to users of public streets.

Material Handling and Spill Prevention

Discharge of hazardous substances or oil into stormwater is subject to reporting requirements. In the event of a spill of a hazardous substance, the operator is required to notify the National Response Center (1–800–424–8802) to properly report the spill. In addition, the operator shall submit a written description of the release (including the type and amount of material released, the date of the release, the circumstances of the release, and the steps to be taken to prevent future spills) to the local MS–4.

B15 – EROSION AND SEDIMENT CONTROL SPECIFICATIONS FOR INDIVIDUAL BUILDING LOTS
None

C1 – DESCRIPTION OF POLLUTANTS AND THEIR SOURCES ASSOCIATED WITH THE PROPOSED LAND USE
The proposed land use will consist of single family residential houses. The pollutants and sources of each pollutant normally expected from these types of land uses are listed below:

Pollutant Source: Passenger vehicles, delivery vehicles, and trucks
Type of Pollutant: Oil, gasoline, diesel fuel, any hydrocarbon associated with vehicular fuels and lubricants, grease, antifreeze, windshield cleaner solution, brake fluid, brake dust, rubber, glass, metal and plastic fragments, grit, road de–icing materials

Pollutant Source: Residence
Type of Pollutant: Cleaning solutions or solvents, leaks from HVAC equipment, grit from roof drainage, aggregate or rubber fragments from roofing system

Pollutant Source: Trash dumpster
Type of Pollutant: Cleaning solutions or solvents, litter (paper, plastic, general refuse associated with distributions operations), uneaten food products, bacteria

Pollutant Source: Roadway
Type of Pollutant: Any pollutant associated with vehicular sources, grit from asphalt wearing surface, bituminous compounds from periodic maintenance (sealing, resurfacing and patching), pavement de–icing materials, concrete fragments,
wind–blown litter from off–site sources, and elevated water temperatures from contact with impervious surfaces

Pollutant Source: Lawn and landscape areas
Type of Pollutant: Fertilizers, soil, organic material (leaves, mulch, grass clippings)

The anticipated pollution sources are the vehicles that will use these future facilities, including both truck and passenger vehicle traffic. Possible pollutants include oil, gasoline, anti–freeze and other pollutants associated with vehicular traffic.

C2&C3 Sequence Describing Stormwater Quality Measure Implementation:
Description of Proposed Post Construction Stormwater Quality Measures:

1. Swales – The proposed grassed swales will collect storm water from sheet flow areas and convey them to the storm sewer. The design of the swales will allow sediment to be partially infiltrated before storm water enters the designed storm sewer system.
2. Inlets – The proposed inlets will prevent large debris such as paper, trash and construction material from entering the storm sewer. The inlet castings are also stamped with an environmental protection stamp informing the public not to pollute the environment.

C4 Location, Dimensions, Specifications and Construction Details of Each Stormwater Quality Measures:

The following items are storm water quality measures that will remain in place after construction is completed and are considered to serve as post–construction storm water quality BMP's.

1. Vegetated swales:
   a. The design of the vegetated swales can be found on Sheets C203–C205. The specifications for the vegetated swales can be found on Sheet C200 of the Noblesville Standard Details. The proposed seed mixture and installation specifications can be found on Sheet C310.

2. Inlets and inlet castings:
   a. The specifications for the storm inlet castings can be found on Sheet C801.

3. Pond
   a. The details for the pond can be found on Sheet C205.

DATE	MARK	REVISIONS	BY
3/17/11		UPDATED SEQUENCE	KRG
3/3/11		REMOVED CURB INLET PROTECTION MATS	KRG

JAMES O. RINEHART IV
REGISTERED
No. 10200495
STATE OF INDIANA
PROFESSIONAL ENGINEER

THIS DRAWING IS NOT INTENDED TO BE REPRESENTED AS A RETRACEMENT OR ORIGINAL BOUNDARY SURVEY, A ROUTE SURVEY OR A SURVEYOR LOCATION REPORT.

CERTIFIED: 1/27/11

STOEPPELWERTH & ASSOCIATES, INC.
CONSULTING ENGINEERS & LAND SURVEYORS
7965 East 106th Street, Fishers, IN 46038–2005
Phone: (317) 849–5935 Fax: (317) 849–5942
Toll Free: (800) 728–6917

STORM WATER
POLLUTION & PREVENTION DETAILS

STORAMERICA

WESTFIELD HAMILTON COUNTY, INDIANA

DRAWN BY: KRG
CHECKED BY: BKR

SHEET NO.
C309

S & A JOB NO.
59815RAD

EROSION CONTROL MAT – SLOPE DETAIL

GENERAL NOTES

1. PREPARE SOIL BEFORE INSTALLING BLANKETS, INCLUDING APPLICATION OF LIME, FERTILIZER AND SEED.
2. BEGIN AT THE TOP OF THE CHANNEL BY ANCHORING THE BLANKET IN A 6" DEEP x 6" WIDE TRENCH. BACKFILL AND COMPACT THE TRENCH AFTER STAPLING.
3. ROLL CENTER BLANKET IN DIRECTION OF WATER FLOW ON BOTTOM OF CHANNEL.
4. PLACE BLANKETS END OVER END (SHINGLE STYLE) WITH A 6" OVERLAP. USE A DOUBLE ROW OF STAGGERED STAPLES 4" APART TO SECURE BLANKETS.
5. FULL LENGTH EDGE OF BLANKETS AT TOP OF SIDE SLOPES MUST BE ANCHORED IN 6" DEEP x 6" WIDE TRENCH. BACKFILL AND COMPACT THE TRENCH AFTER STAPLING.
6. BLANKETS ON SIDE SLOPES MUST BE OVERLAPPED 4" OVER THE CENTER BLANKET AND STAPLED.
7. IN MEDIUM/HIGH FLOW CHANNEL APPLICATIONS, A STAPLE CHECK SLOT IS RECOMMENDED AT 30 TO 40 FOOT INTERVALS. USE A ROW OF STAPLES 4" APART OVER ENTIRE WIDTH OF THE CHANNEL. PLACE A SECOND ROW 4" BELOW THE FIRST ROW IN A STAGGERED PATTERN.
8. THE TERMINAL END OF THE BLANKETS MUST BE ANCHORED IN A 6" DEEP x 6" WIDE TRENCH. BACKFILL AND COMPACT THE TRENCH AFTER STAPLING.

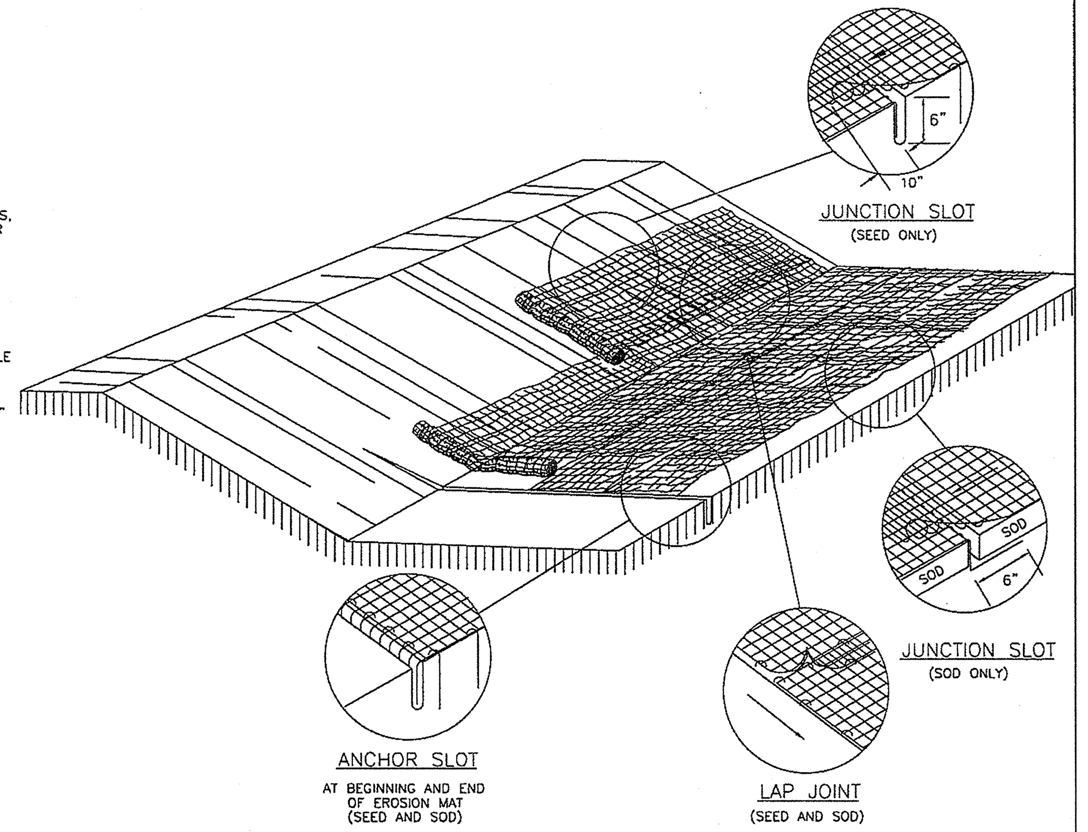

EROSION CONTROL MAT – SLOPE DETAIL

TOWN OF WESTFIELD, INDIANA

RENEE LYNN GOFF REGISTERED No. 10403860 STATE OF INDIANA PROFESSIONAL ENGINEER

Renée Lynn Goff 4/10/06 DATE

FIGURE EC-2

SILT FENCE DETAIL

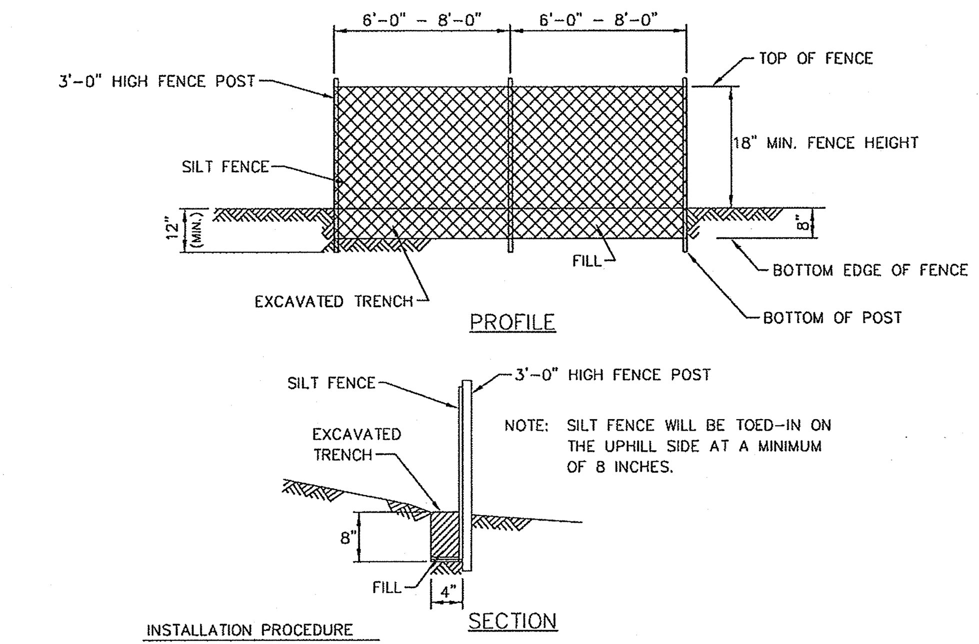

INSTALLATION PROCEDURE

1. 2" x 2" X 36" HARDWOOD OR STEEL FENCE POSTS ARE INSTALLED 6' APART (w/ EXTRA STRENGTH FABRIC WITHOUT WIRE BACKING) OR 8' APART (w/ WIRE BACKING), ON A SLIGHT ANGLE TOWARD THE ANTICIPATED RUNOFF SOURCE.
2. A TRENCH 4" WIDE BY 8" DEEP IS DUG ALONG THE UPHILL SIDE OF THE FENCE LINE.
3. THE SILT FENCE IS UNROLLED AND LAID OUT ALONG THE FENCE LINE.
4. A BUILT-IN ATTACHMENT CORD RUNS THROUGHOUT THE FULL LENGTH OF EACH 150 LINEAR FOOT ROLL. ONE END OF THE ROLL HAS APPROXIMATELY 5' OF CORD. THE OTHER END HAS APPROXIMATELY 20' OF CORD. THE END WITH 5' OF CORD IS WRAPPED AROUND THE FIRST POST AND SECURED.
5. THE FENCE IS PULLED TO THE NEXT POST AND A 1.5" SLIT IS MADE IN THE HEM DIRECTLY ABOVE THE CORD. THE CORD IS PULLED OUT OF THE HEM AND PULLED TAUT FROM THE PRECEDING POST AND WRAPPED TWICE AROUND THE POST.
6. THE SLITTING OF THE HEM ON EACH POST IS REPEATED UNTIL THE FINAL POST IS REACHED, AT WHICH TIME THE MATERIAL IS WRAPPED AROUND THE LAST POST AND SECURED WITH THE ENCLOSED CORD.
7. AT THIS TIME THE LOWER 8" OF THE FENCE IS LAID IN THE TRENCH AND CURLED TOWARD THE EROSION SOURCE. THE TRENCH IS THEN BACKFILLED WITH SOIL.

SILT FENCE DETAIL

TOWN OF WESTFIELD, INDIANA

RENEE LYNN GOFF REGISTERED No. 10403860 STATE OF INDIANA PROFESSIONAL ENGINEER

Renée Lynn Goff 4/10/06 DATE

FIGURE EC-4

information, including available testing services.)

2. If soil pH is unsuitable for the species to be seeded, apply lime according to test recommendations.

3. Fertilize as recommended by the soil test. If testing was not done, consider applying 400–600 lbs./acre of 12–0–12 analysis, or equivalent, fertilizer. Do not use phosphorous containing fertilizer (12–12–12) unless soil tests show a phosphorous deficency.

4. Till the soil to obtain a uniform seedbed, working the fertilizer and lime into the soil 2–4 in. deep with a disk or rake operated across the slope.

A = KENTUCKY BLUE GRASS 40 lbs./AC.: CREEPING RED FESCUE 40 lbs./AC.: PLUS 2 TONS STRAW MULCH/AC. OR ADD ANNUAL RYEGRASS 20lbs>/AC.
B = KENTUCKY BLUE GRASS 60 lbs./AC.: CREEPING RED FESCUE 60 lbs./AC.: PLUS 2 TONS STRAW MULCH/AC. OR ADD ANNUAL RYEGRASS 30lbs>/AC.
C = SPRING OATS 3 BUSHEL/ACRE
D = WHEAT OR RYE 2 BUSHEL/ACRE
E = ANNUAL RYEGRASS 40 lbs./AC. (1 lb./1000 sq. ft.)
F = SOD
G = STRAW MULCH 2 TONS/ACRE–ANCHOR ALL MULCH BY CRIMPING OR TACKIFYING
/// = IRRIGATION NEEDED DURING JUNE, JULY, AND/OR SEPT.
** = IRRIGATION NEEDED FOR 2 TO 3 WEEKS AFTER APPLYING SOD

Rule 5 requires all disturbed areas likely to be idle for 15 day shall have surface stabilization applied. When weather conditions prevent rapid germination of grass, then 2t/ac mulch will be used to ensure ground stabilization requirements are met.

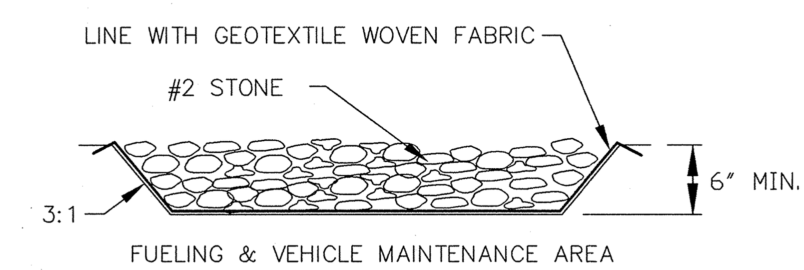

SECTION "Z"–"Z"
NOT-TO-SCALE

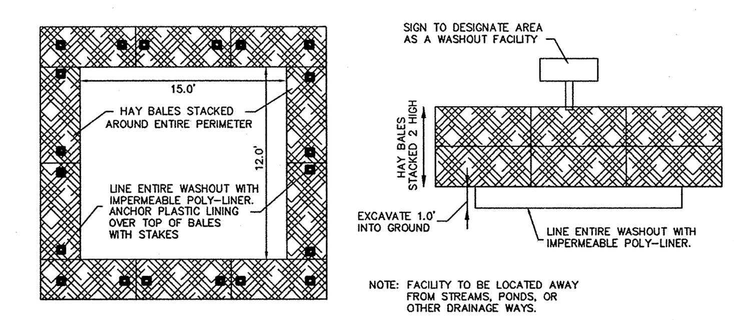

CONCRETE WASHOUT DETAIL
NOT-TO-SCALE

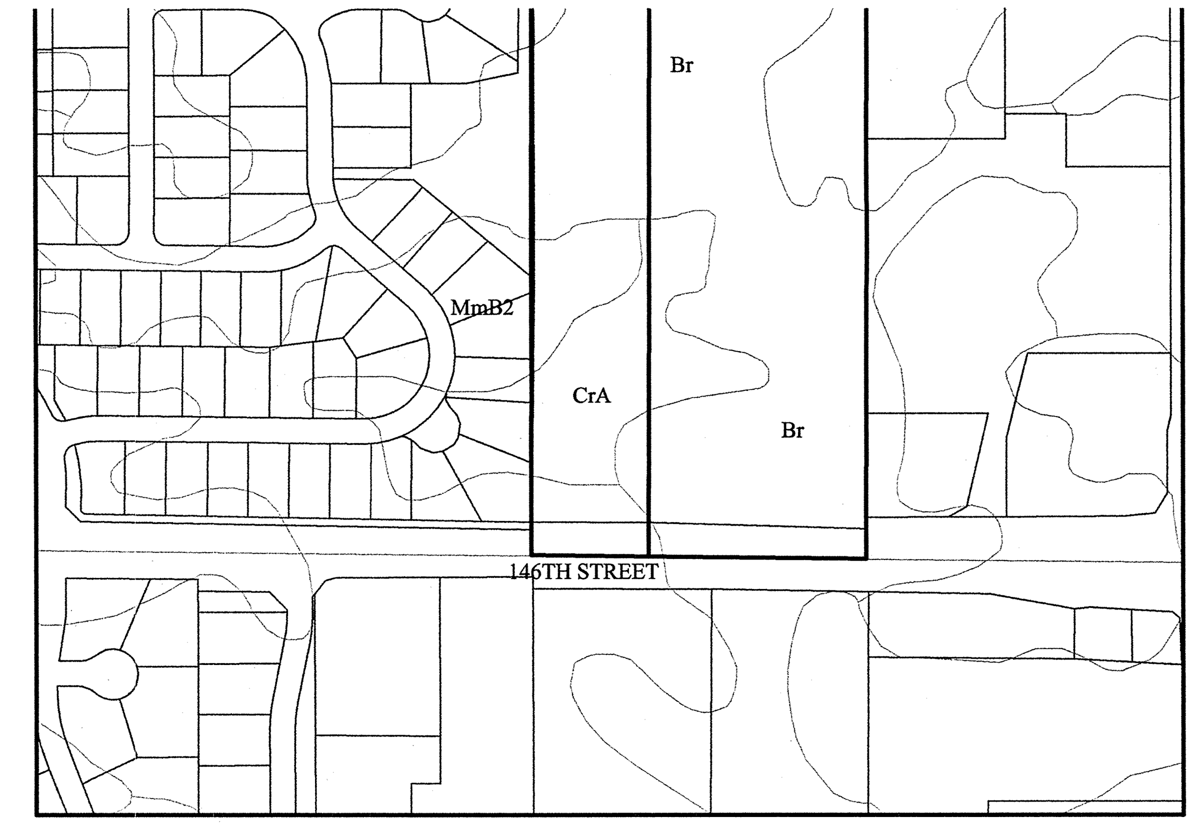

SOILS MAP
SCALE: 1" =300'

Br: Brookston silty clay loam- this soil is dark colored, silty in texture and on depressional uplands. It is deep and very poorly drained with moderate permeability. It has high available water for plant growth and high organic matter content. It has compact till starting at a depth of 40 to 60 inches. The main soil features that affect the urban development uses are seasonal high water table, high potential frost action, moderate shrink-swell potential, moderate permeability and ponded surface water. Because of these engineering limitations this site will be constructed as follows. Maple Village, Section Three, being a singlefamily development within the jurisdiction of The City of Westfield and Hamilton County will have to abide by the current Subdivision Control Ordinance. This ordinance requires that we have an artificially drained site and that the buildings within this development be well above the 100yr elevation of the proposed detention basins and therefore be protected from flooding. All buildings will be of large slab type construction. In cases where a high water table is present special footings shall be constructed. All roads will have adequate sub-base. All sanitary sewers shall be public and therefore no septic systems shall be allowed Crosby silt loam, 0-3 percent slopes- this soil is light colored, silty in texture and on sloping uplands. It is deep and somewhat

CrA: poorly drained with slow permeability. It has high available water for plant growth and medium organic matter content. The soil has compact till starting at a depth between 20 -40 inches. The main soil features that affect urban development uses are seasonal high water table, moderate shrink-swell potential, high potential frost action and slow permeability. Because of these engineering limitations this site will be constructed as follows. Maple Village, Section Three, being a singlefamily development within the jurisdiction of The City of Westfield and Hamilton County will have to abide by the current Subdivision Control Ordinance. This ordinance requires that we have an artificially drained site and that the buildings within this development be well above the 100yr elevation of the proposed detention basins and therefore be protected from flooding. All buildings will be of large slab type construction. In cases where a high water table is present special footings shall be constructed. All roads will have adequate sub-base. All sanitary sewers shall be public and therefore no septic systems shall be allowed

MmB2: Miami silt loam, 2 to 6 percent slopes, eroded This moderately well drained soil has a seaonal high watertable at 2.0 to 3.5 ft. and is onsideslopes and rises on uplands. Slopes are 2 to 6 percent. the native vegetation is hardwoods. The surface layer is silt loam and has moderately loworganic matter content (1.0 to 2.0 percent). Permeability is very slow (<0.06 in/hr) in the most restrictive layer above 60 inches. Available water capacity islow (5.9 inches in the upper 60 inches). The pH of the surface layer in non-limed areas is 5.1 to 6.0. Droughtiness and water erosion are management concerns for crop production.

EROSION CONTROL MAT – STAPLE GUIDE

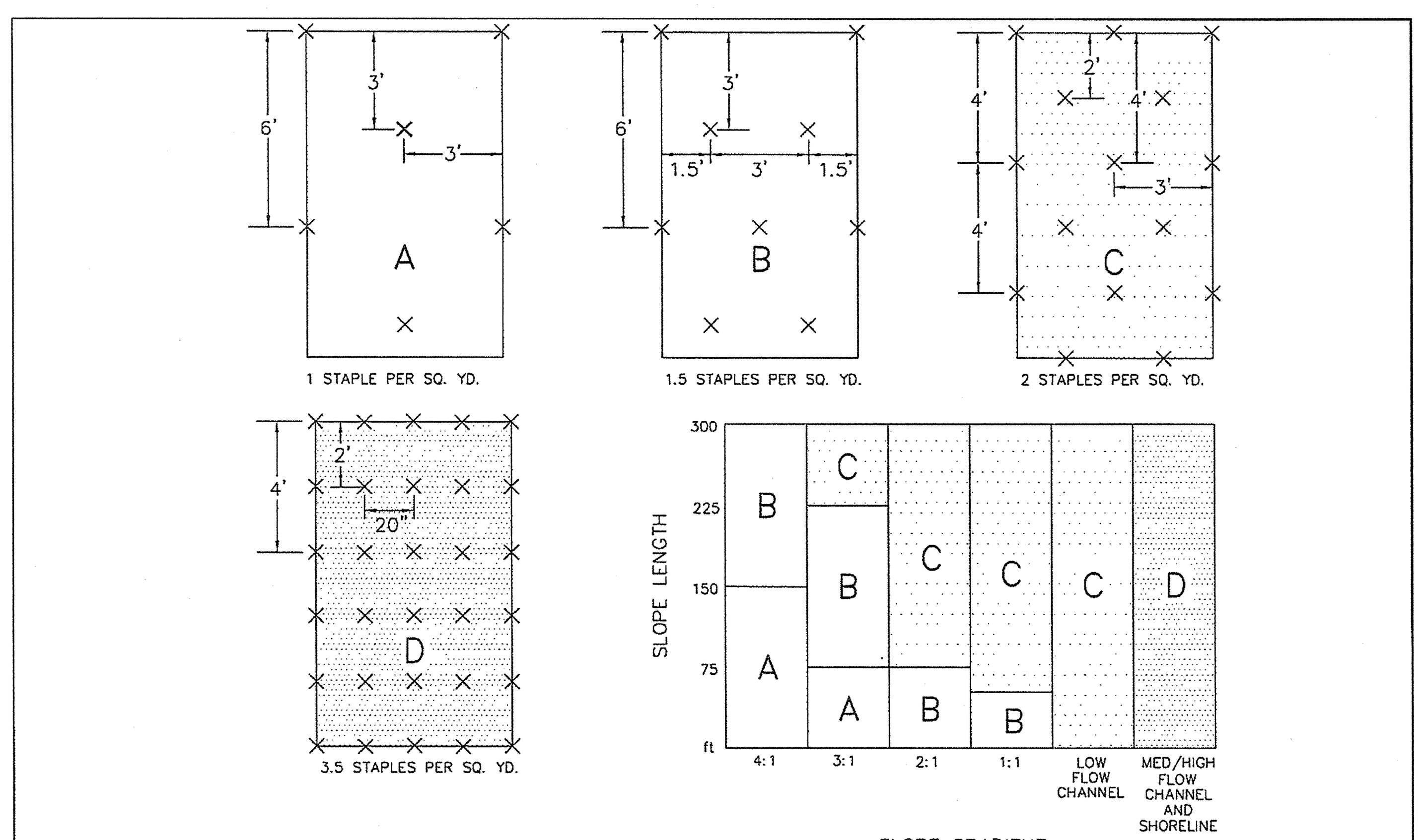

EROSION CONTROL MAT – STAPLE GUIDE

TOWN OF WESTFIELD, INDIANA

RENEE LYNN GOFF REGISTERED No. 10403860 STATE OF INDIANA PROFESSIONAL ENGINEER

Renée Lynn Goff 4/10/06 DATE

FIGURE EC-3

FLEXSTORM INLET FILTERS PRODUCT SELECTION AND SPECIFICATION DRAWING

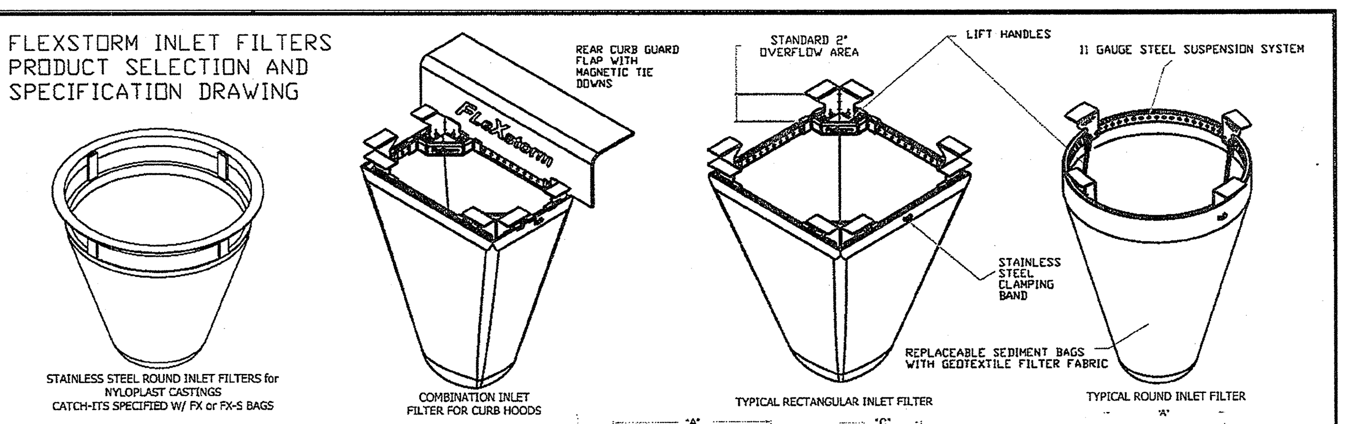

1. INDENTIFY YOUR FRAME STYLE, SIZE, AND MATERIAL

STYLE	FRAME STYLE AND SIZE	Frame P/N:
ROUND	Small Round (up to 20.0" dia grates (A) dim)	62SRD
	Med Round (20.1" - 26.0" dia grates (A) up to 25" dia openings (B))	62MRD
	Large Round (26.1" - 32.0" dia grates (A) up to 30" openings (B))	62LRD
	XL Round (32.1" dia - 39" dia grates (A) up to 37" dia openings (B))	62XLRD
RECT/ SQUARE	Small Rect / Square (up to 16" (B) x 16" (D) openings or 64" perimeter)	62SSQ
	Med Rect / Square (up to 24" (B) x 24" (D) openings or 96" perimeter)	62MSQ
	Large Rect / Square (up to 36" (B) x 24" (D) openings or 120" perimeter)	62LSQ
	XL Rect / Square (side by side 2 pc set to fit up to 48" (B) x 36" (D) openings)	62XLSQ
COMBO INLETS	Small Rect / Square (ref Rect sizing; shipped with Magnetic Curb Flaps)	62SCB
	Med Rect / Square (ref Rect sizing; shipped with Magnetic Curb Flaps)	62MCB
	Large Rect / Square (ref Rect sizing; shipped with Magnetic Curb Flaps)	62LCB
	XL Rect / Square (ref Rect sizing; shipped with Magnetic Curb Flaps)	62XLCB
NYLOPLAST	12" diameter Nyloplast castings (Stainless Steel Framing standard)	6212NY
	15" diameter Nyloplast castings (Stainless Steel Framing standard)	6215NY
	18"diameter Nyloplast castings (Stainless Steel Framing standard)	6218NY
	24" diameter Nyloplast castings (Stainless Steel Framing standard)	6224NY
	30" diameter Nyloplast castings (Stainless Steel Framing standard)	6230NY
WALL MOUNT	Open Throat Gutters - Curb Opening Size	
	Up to 4' (1 Filter and Mounting Hardware)	62WM1
	Between 4' and 8' (2 Filters and Mounting Hardware)	62WM2
	Between 8' and 12' (3 Filters and Mounting Hardware)	62WM3
	Between 12' and 16' (4 Filters and Mounting Hardware)	62WM4
	UPGRADED FRAMING MATERIAL OPTIONS (STANDARD IS ZINC PLATED)	SUFFIX
	CHROME PLATED FRAMING FOR HIGH SALT EXPOSURE	- CHR
	STAINLESS STEEL FRAMING FOR HIGH SALT AND/OR CHEMICAL EXPOSURE	- SS

2. SELECT YOUR FILTER BAG PART NUMBER

FLEXSTORM FILTER BAGS	(22" depth) STD Bag P/N	(12" depth) Short Bag P/N	Clean Water Flow Rate (GPM/SqFt)	Min A.O.S. (US Sieve)
FX: Standard Woven Bag	FX	FX-S	200	40
FX+: Woven w/ MyCelx	FXP	FXP-S	200	40
FXO: Woven w/ Oil Boom	FXO	FXO-S	200	40
PC: Post Construction Bag	PC	PC-S	137	140
PC+: PC Bag w/ MyCelx	PCP	PCP-S	137	140
LL: Litter and Leaf Bag	LL	LL-S	High	3.5
IL: IDOT Non-Woven Bag	IL	IL-S	145	70

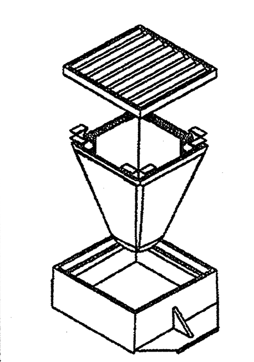

INSTALLATION:
1. REMOVE GRATE
2. DROP FLEXSTORM INLET FILTER ONTO LOAD BEARING LIP OF CASTING OR CONCRETE STRUCTURE
3. REPLACE GRATE

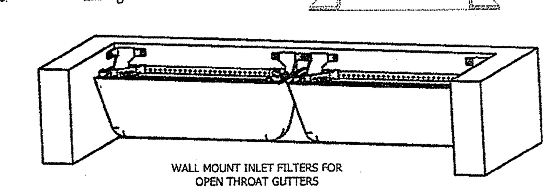

WALL MOUNT INLET FILTERS FOR OPEN THROAT GUTTERS

SPECIFICATIONS FOR STANDARD BAGS BY NOMINAL SIZE

Nominal Bag Size	Solids Storage (CuFt)	Filtered Flow Rate at 50% Max: FX (Woven)	PC (Post Constr)	IL (Non Woven)	* PC Oil Retent (Oz)	** PCP Oil Retent (Oz)
Small	1.6	1.2	0.8	0.9	66	155
Medium	2.1	1.8	1.2	1.3	96	185
Large	3.8	2.2	1.5	1.6	120	209
XL	4.2	3.6	2.4	2.6	192	370

* PC filter bag at 50% max adsorption capacity
** PC filter bag at 50% capacity and MyCelx skimmer at 100% capacity

3. CREATE YOUR FLEXSTORM INLET FILTER PART NUMBER

Frame P/N from Step 1. – Filter Bag P/N from Step 2. – Framing Material

ALL PRODUCTS MANUFACTURED BY INLET & PIPE PROTECTION, INC
DISTRIBUTED BY ADS
WWW.INLETFILTERS.COM
(866) 287-8655 PH
(630) 355-3477 FX
INFO@INLETFILTERS.COM

SIZE C | DWG NO FLEXSTORM_SPECS | REV | SCALE | SHEET 1 OF 1

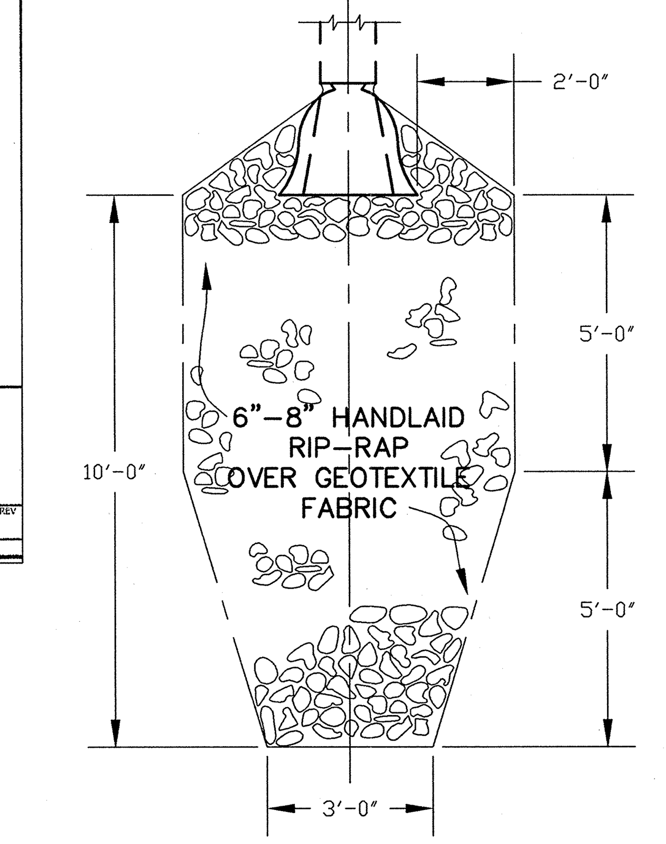

RIP-RAP DETAIL
NOT-TO-SCALE

1. Inspect and repair as needed, and remove any accumulated sediments after every storm.

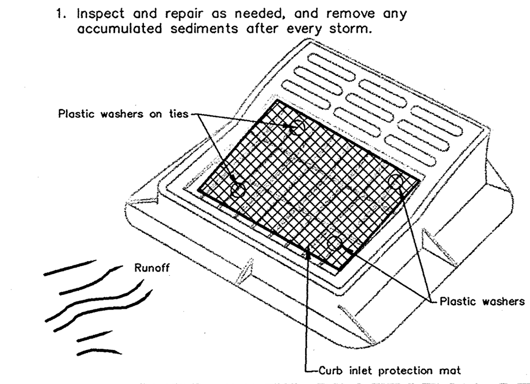

CURB INLET PROTECTION DETAIL
NOT-TO-SCALE

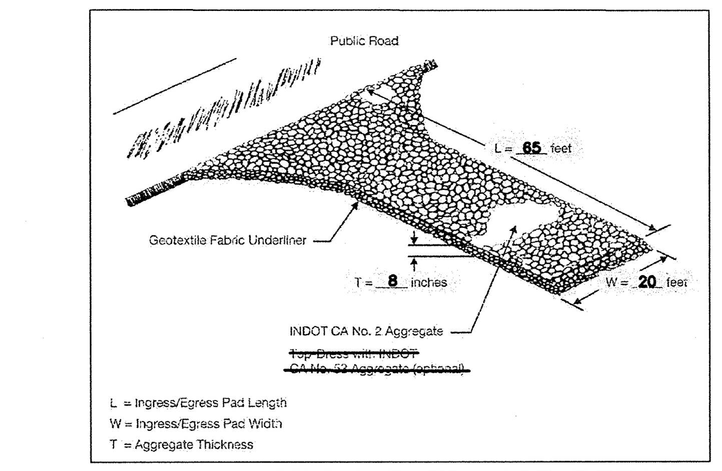

CONSTRUCTION ENTRANCE DETAIL
NOT-TO-SCALE

EROSION CONTROL NOTES

EROSION CONTROL MEASURE	INSTALLATION SEQUENCE	MAINTENANCE
STONE ENTRANCE	PRIOR TO CLEANING AND GRADING	INSPECT ENTRANCE PAD AND SEDIMENT DISPOSAL AREA WEEKLY AND AFTER STORM EVENTS OR HEAVY USE. RESHAPE PAD AS NEEDED FOR DRAINAGE AND RUNOFF CONTROL. TOPDRESS WITH CLEAN STONE AS NEEDED. IMMEDIATELY REMOVE MUD AND SEDIMENT TRACKED OR WASHED ONTO PUBLIC ROADS BY BRUSHING OR SWEEPING. FLUSHING SHOULD ONLY BE USED IF THE WATER IS CONVEYED INTO A SEDIMENT TRAP OR BASIN. REPAIR ANY BROKEN ROAD PAVEMENT IMMEDIATELY.
SILT FENCE	PRIOR TO CLEANING AND GRADING	INSPECT THE SILT FENCE PERIODICALLY AND AFTER EACH STORM EVENT. IF FENCE FABRIC TEARS, STARTS TO DECOMPOSE, OR IN ANY WAY BECOMES INEFFECTIVE, REPLACE THE AFFECTED PORTION IMMEDIATELY. REMOVE DEPOSITED SEDIMENT WHEN IT REACHES HALF THE HEIGHT OF THE FENCE AT ITS LOWEST POINT OR IS CAUSING THE FABRIC TO BULGE. TAKE CARE TO AVOID UNDERMINING THE FENCE DURING CLEANOUT. AFTER THE CONTRIBUTING DRAINAGE AREA HAS BEEN STABILIZED, REMOVE THE FENCE AND SEDIMENT DEPOSITS, BRING THE DISTURBED AREA TO GRADE, AND STABILIZE.
TOPSOIL STOCKPILE	PRIOR TO CLEANING AND GRADING	DETERMINE DEPTH AND SUITABILITY OF TOPSOIL AT THE SITE. (FOR HELP, CONTACT YOUR LOCAL SWCD OFFICE TO OBTAIN A COUNTY SOIL SURVEY REPORT OR CONSULT WITH A SOIL SCIENTIST.) PRIOR TO STRIPPING TOPSOIL, INSTALL ANY SITE-SPECIFIC DOWNSLOPE PRACTICES NEEDED TO CONTROL RUNOFF AND SEDIMENTATION. REMOVE THE SOIL MATERIAL NO DEEPER THAN WHAT THE COUNTY SOIL SURVEY DESCRIBES AS "SURFACE SOIL" (I.E., A OR AP HORIZON). STOCKPILE THE MATERIAL IN ACCESSIBLE LOCATIONS THAT NEITHER INTERFERE WITH OTHER CONSTRUCTION ACTIVITIES NOR BLOCK NATURAL DRAINAGE; AND INSTALL SILT FENCES OR OTHER BARRIERS TO TRAP SEDIMENT (SEE EXHIBIT 3.02-B). (SEVERAL SMALL PILES AROUND THE CONSTRUCTION SITE ARE USUALLY MORE EFFICIENT AND EASIER TO CONTAIN THAN ONE LARGE PILE.) IF SOIL IS STOCKPILED FOR MORE THAN 6 MO., IT SHOULD BE TEMPORARILY SEEDED OR COVERED WITH A TARP OR SURROUNDED BY A SEDIMENT BARRIER.
TEMPORARY DIVERSIONS	AFTER ROUGH GRADING	INSPECT WEEKLY AND FOLLOWING EACH STORM EVENT. REMOVE SEDIMENT FROM THE CHANNEL AND REINFORCE THE RIDGE AS NEEDED. CHECK THE OUTLETS AND MAKE NECESSARY REPAIRS IMMEDIATELY. REMOVE SEDIMENT FROM TRAPS WHEN THEY ARE 50% FULL. WHEN THE WORK AREA HAS BEEN STABILIZED, REMOVE THE RIDGE, FILL THE CHANNEL TO BLEND WITH THE NATURAL GROUND, REMOVE TEMPORARY SLOPE DRAINS, AND STABILIZE ALL DISTURBED AREAS.
ROCK DAM	AFTER ROUGH GRADING	INSPECT THE ROCK DAM AND BASIN FOLLOWING EACH STORM EVENT. REMOVE SEDIMENT WHEN IT ACCUMULATES TO HALF THE DESIGN VOLUME (MARKED BY STAKE) CHECK THE DAM AND ABUTMENTS FOR EROSION, PIPING, AND ROCK DISPLACEMENT, AND REPAIR IMMEDIATELY IF THE BASIN DOES NOT DRAIN BETWEEN STORMS, REPLACE THE STONE ON THE UPSTREAM FACE OF DAM IF THE BASIN DRAINS TO RAPIDLY FOLLOWING A STORM,(LESS THAN 6 HRS.), ADD INDOT CA NO. 5 GRAVEL ON THE UPSTREAM FACE OF THE DAM. ONCE THE CONTRIBUTING DRAINAGE AREA HAS BEEN PERMANENTLY STABILIZED, a. REMOVE WATER AND SEDIMENT FROM THE BASIN. b. REMOVE THE DAM, DISPOSING OF THE ROCK IN DESIGNATED DISPOSAL AREAS. c. SMOOTH THE SITE TO BLEND THE SURROUNDING AREA. d. STABILIZE
TEMPORARY SEEDING	AFTER ROUGH GRADING	INSPECT PERIODICALLY AFTER PLANTING TO SEE THAT VEGETATIVE STANDS ARE ADEQUATELY ESTABLISHED; RESEED IF NECESSARY. CHECK FOR EROSION DAMAGE AFTER STORM EVENTS AND REPAIR; RESEED AND MULCH IF NECESSARY. TOPDRESS FALL SEEDED WHEAT OR RYE SEEDINGS WITH 50 LBS./ACRE OF NITROGEN IN FEBRUARY OR MARCH IF NITROGEN DEFICIENCY IS APPARENT. (EXHIBIT 3.11-B SHOWS ONLY WHEAT/RYE FALL SEEDED.)
PERMANENT SEEDING	AFTER FINISH GRADING	INSPECT PERIODICALLY, ESPECIALLY STORM EVENTS, UNTIL THE STAND IS SUCCESSFULLY ESTABLISHED. (CHARACTERISTICS OF A SUCCESSFUL STAND INCLUDE: VIGOROUS DARK GREEN OR BLUISH-GREEN SEEDLINGS; UNIFORM DENSITY WITH NURSE PLANTS, LEGUMES, AND GRASSES WELL INTERMIXED; GREEN LEAVES; AND THE PERENNIALS REMAINING GREEN THROUGHOUT THE SUMMER, AT LEAST AT THE PLANT BASE.) PLAN TO ADD FERTILIZER THE FOLLOWING SEASON ACCORDING TO SOIL TEST RECOMMENDATIONS. REPAIR DAMAGED, BARE, OR SPARSE OR PATCHY, BY FILLING ANY GULLIES, RE-FERTILIZING, OVER – OR RE-SEEDING AND MULCHING AFTER RE-PREPARING THE SEEDBED. IF VEGETATION FAILS TO GROW, CONSIDER SOIL TESTING TO DETERMINE ACIDITY OR NUTRIENT DEFICIENCY PROBLEMS. (CONTACT YOUR SWCD OR COOPERATIVE EXTENSION OFFICE FOR ASSISTANCE.) IF ADDITIONAL FERTILIZATION IS NEEDED TO GET A SATISFACTORY STAND, DO SO ACCORDING TO SOIL TEST RECOMMENDATIONS.
EROSION CONTROL MATTING	AFTER FINISH GRADING	DURING VEGETATIVE ESTABLISHMENT, INSPECT AFTER STORM EVENTS FOR ANY EROSION BELOW THE BLANKET. IF ANY AREA SHOWS EROSION, PULL BACK THAT PORTION OF THE BLANKET COVERING IT, ADD SOIL, RE-SEED THE AREA, AND RE-LAY AND STAPLE THE BLANKET. AFTER VEGETATIVE ESTABLISHMENT, CHECK THE TREATED AREA PERIODICALLY.
INLET PROTECTION	AFTER EACH INLET IS PLACED	INSPECT FREQUENTLY FOR DAMAGE BY VEHICULAR TRAFFIC, AND REPAIR IF NEEDED. INSPECT AFTER EACH STORM EVENT. REMOVE SEDIMENT (BUT NOT BY FLUSHING) WHEN IT REACHES HALF THE HEIGHT OF THE BARRIER. DEPOSIT REMOVED SEDIMENT WHERE IT WILL NOT ENTER STORM DRAINS.
REMOVAL OF INLET PROTECTION	AFTER ALL AREAS DRAINING TO THESE AREAS ARE STABILIZED	N/A
REMOVAL OF SILT FENCE	AFTER ALL AREAS DRAINING TO THESE AREAS ARE STABILIZED	N/A

DATE	MARK	
3/17/11		ADDED FIBER …
3/3/11		REVISED DETAI…

JAMES O. RINEHART IV REGISTERED No. 10200495 STATE OF INDIANA PROFESSIONAL ENGINEER

THIS DRAWING IS NOT INTENDED TO BE REPRESENTED AS A RETRACEMENT OR ORIGINAL BOUNDARY SURVEY, A ROUTE SURVEY OR A SURVEYOR LOCATION REPORT.

CERTIFIED: 1/27/11

STOEPPELWERTH & ASSOCIATES, INC.
CONSULTING ENGINEERS & LAND SURVEYORS
7965 East 106th Street, Fishers, IN 46038-2005
Phone: (317) 849-5935 Fax: (317) 849-5942
Toll Free: (800) 728-6917

STORM WATER POLLUTION & PREVENTION DETAILS

STORAMERICA

HAMILTON COUNTY, INDIANA

WESTFIELD

DRAWN BY: KRG | CHECKED BY: BKR

SHEET NO. C310

S & A JOB NO. 59815RAD

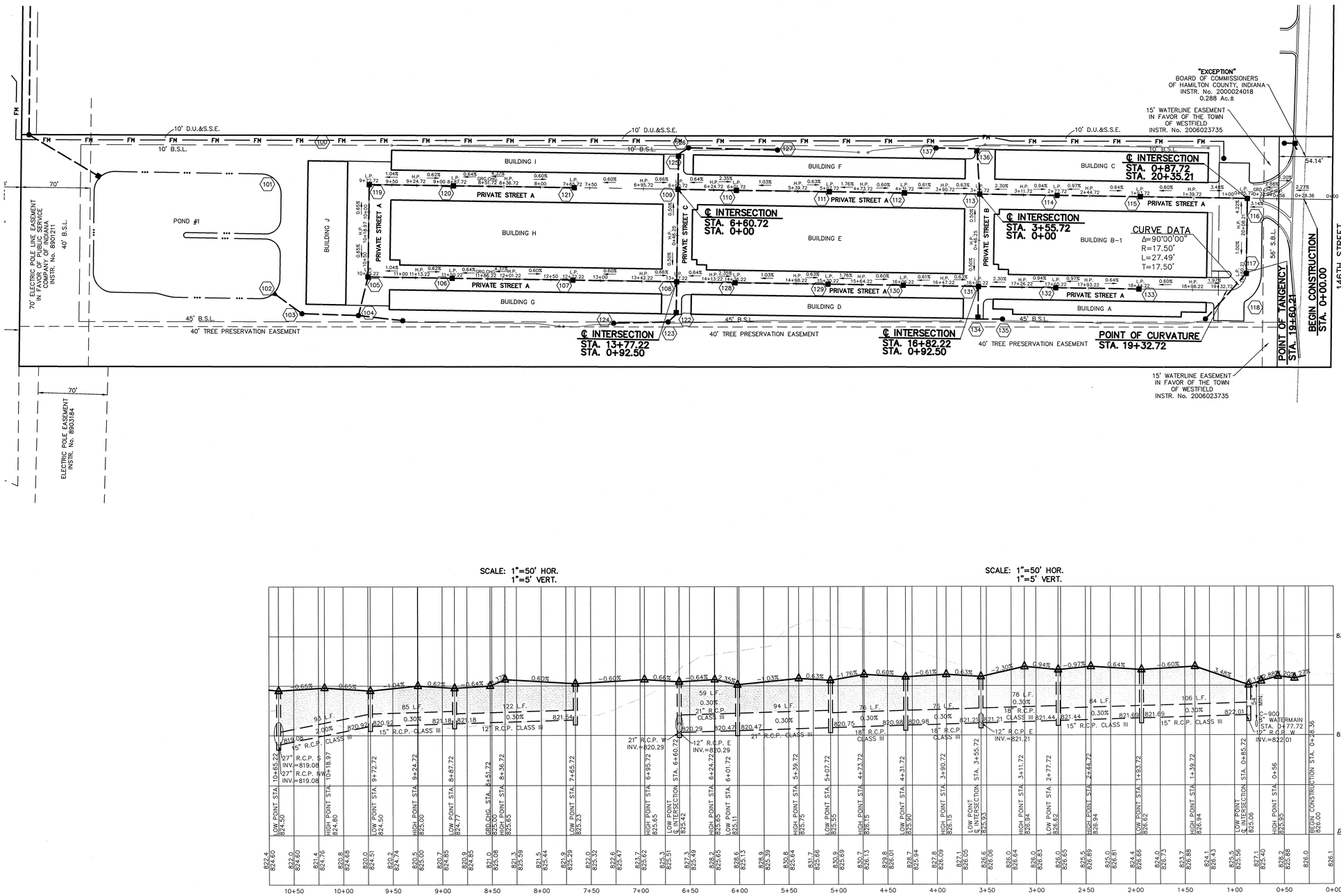

PRIVATE STREET A

DATE	MARK	REVISIONS	BY
3/3/11		REVISED PROFILE PER ENTRANCE CHANGES	KRG

JAMES O. RINEHART IV
REGISTERED
No. 10200495
STATE OF INDIANA
PROFESSIONAL ENGINEER

THIS DRAWING IS NOT INTENDED TO BE REPRESENTED AS A RETRACEMENT OR ORIGINAL BOUNDARY SURVEY, A ROUTE SURVEY OR A SURVEYOR LOCATION REPORT.

CERTIFIED: 1/27/11

STOEPPELWERTH & ASSOCIATES, INC.
CONSULTING ENGINEERS & LAND SURVEYORS
7965 East 106th Street, Fishers, IN 46038-2505
Phone: (317) 849-5935 Fax: (317) 849-5942
Toll Free: (800) 728-6917

STREET PLAN & PROFILES
STORAMERICA

HAMILTON COUNTY, INDIANA

WESTFIELD

DRAWN BY: KRG
CHECKED BY: BKR

SHEET NO.
C400

S & A JOB NO.
59815RAD

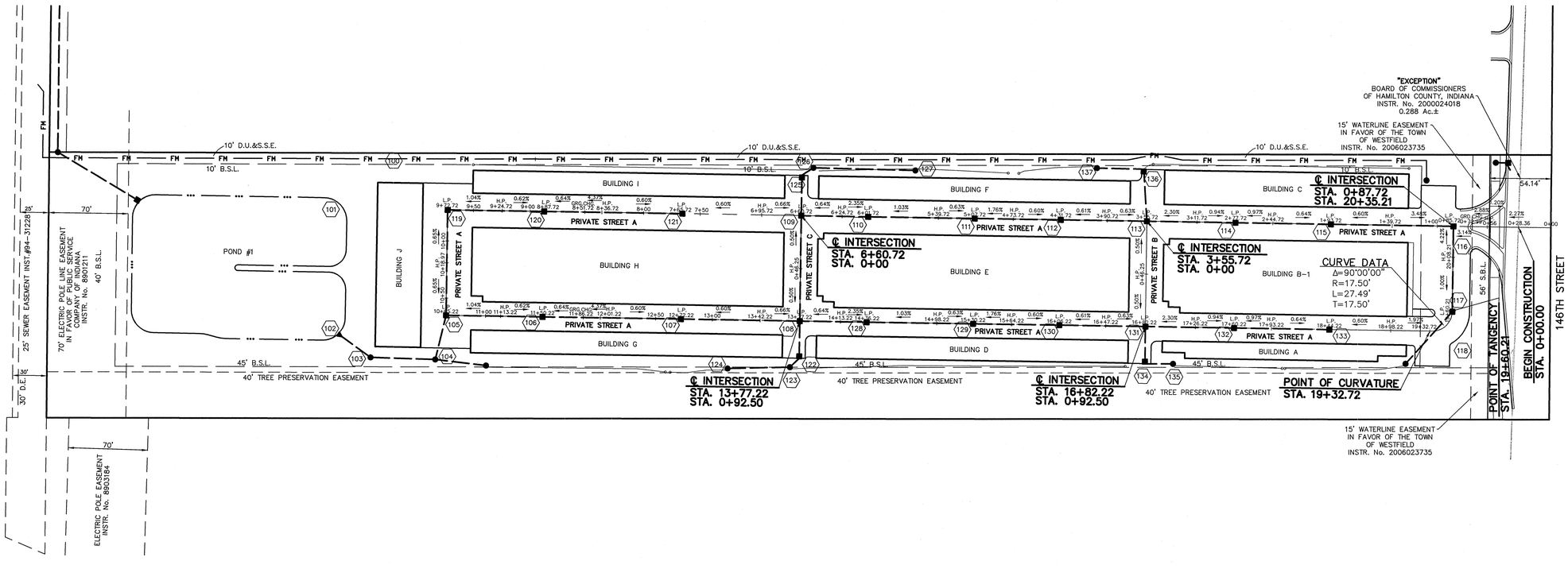

PRIVATE STREET A

DATE	MARK	REVISIONS	BY
3/3/11		REVISED PROFILE PER ENTRANCE CHANGES	KRG

JAMES O. RINEHART IV
REGISTERED
No. 10200495
STATE OF INDIANA
PROFESSIONAL ENGINEER

THIS DRAWING IS NOT INTENDED TO BE REPRESENTED AS A RETRACEMENT OR ORIGINAL BOUNDARY SURVEY, A ROUTE SURVEY OR A SURVEYOR LOCATION REPORT.

CERTIFIED: 1/27/11

STOEPPELWERTH & ASSOCIATES, INC.
CONSULTING ENGINEERS & LAND SURVEYORS
7965 East 106th Street, Fishers, IN 46038-2505
Phone: (317) 849-5935 Fax: (317) 849-5942
Toll Free: (800) 728-6917

STREET PLAN & PROFILES
STORAMERICA
HAMILTON COUNTY, INDIANA
WESTFIELD

DRAWN BY: KRG
CHECKED BY: BKR
SHEET NO. C401
S & A JOB NO. 59815RAD

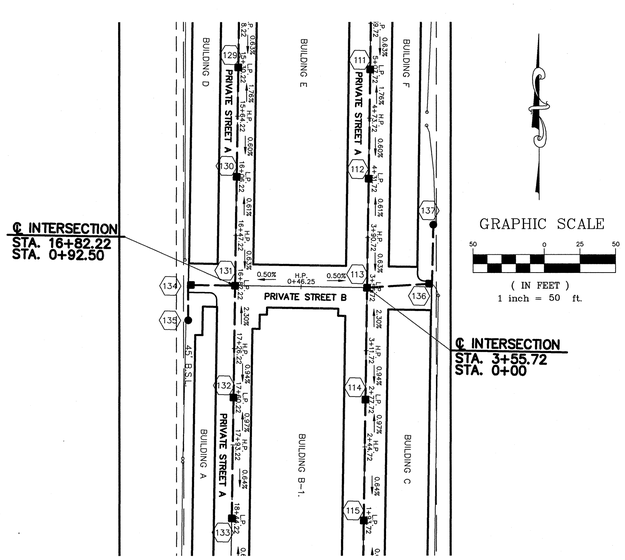

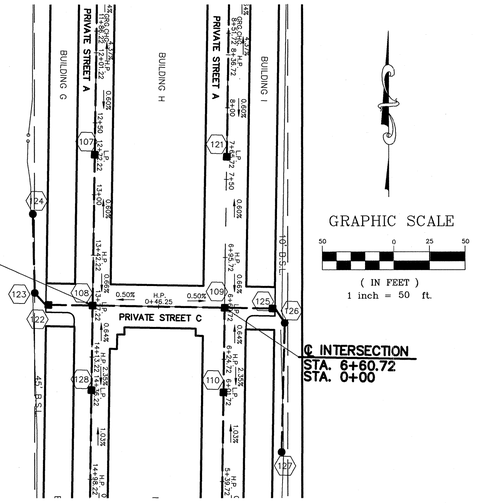

GRAPHIC SCALE

50 0 25 50

(IN FEET)
1 inch = 50 ft.

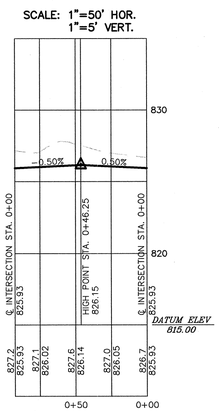

PRIVATE STREET B

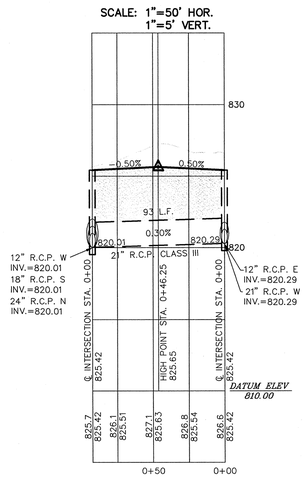

PRIVATE STREET C

NO.	DATE	MARK	REVISIONS	BY

JAMES D. RINEHART IV
REGISTERED
No. 10200495
STATE OF INDIANA
PROFESSIONAL ENGINEER

THIS DRAWING IS NOT INTENDED TO BE USED AS A REPLACEMENT FOR AN ORIGINAL BOUNDARY SURVEY, A ROUTE SURVEY OR A SURVEYOR LOCATION REPORT.

CERTIFIED: 1/27/11

STOEPPELWERTH & ASSOCIATES, INC.
CONSULTING ENGINEERS & LAND SURVEYORS
7965 East 106th Street, Fishers, IN 46038-2505
Phone: (317) 849-5935 Fax: (317) 849-5942
Toll Free: (800) 728-6917

STREET PLAN & PROFILES

STORAMERICA

WESTFIELD — HAMILTON COUNTY, INDIANA

DRAWN BY:	CHECKED BY:
KRG	BKR

SHEET NO.
C402

S & A JOB NO.
59815RAD

S:\59815RAD\Dwg\PLAN\Street Plan & Profile-Insp Layout, 1/26/2011 1:48:28 PM, KGibbens, 11

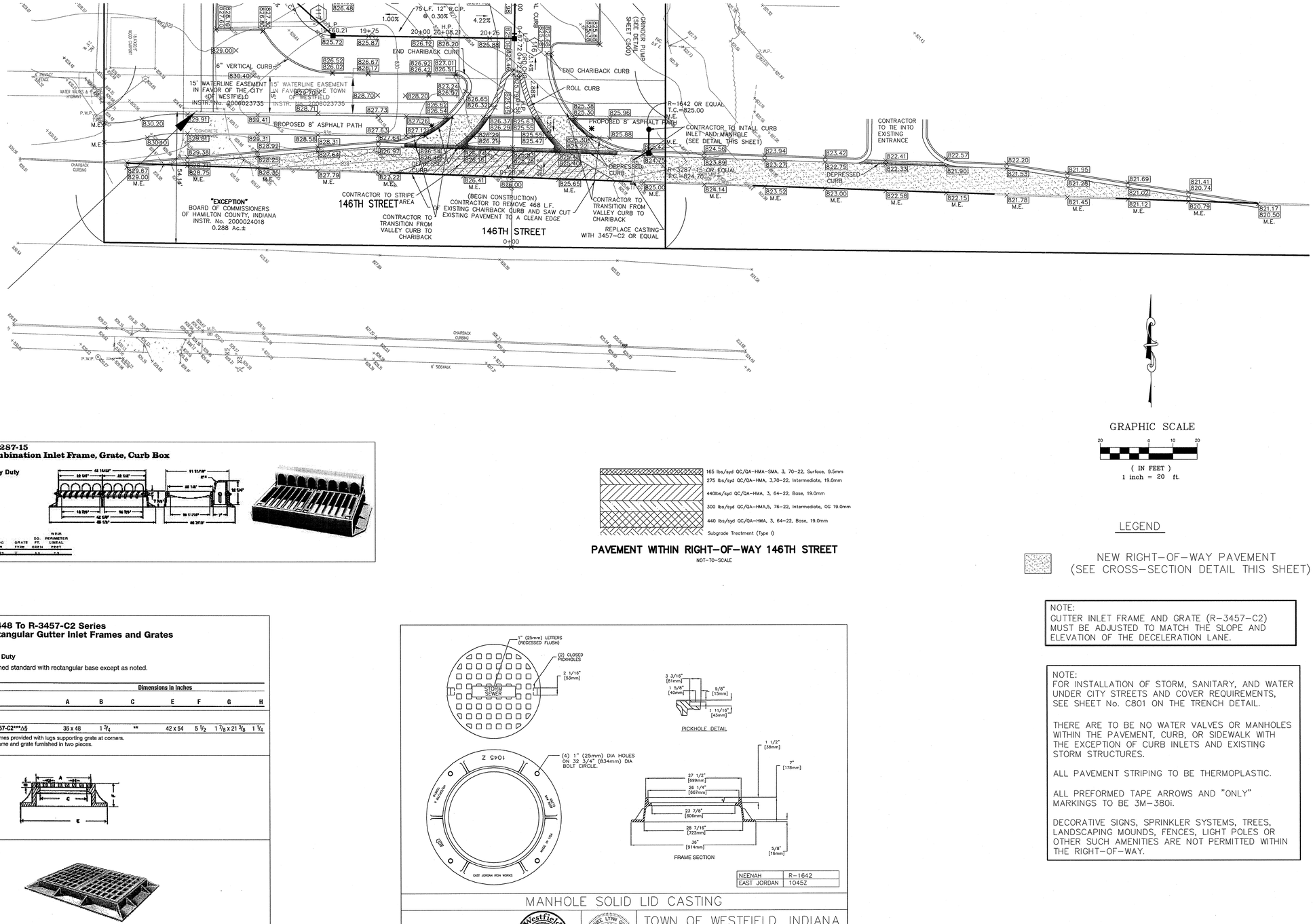

GRAPHIC SCALE

20 0 10 20

(IN FEET)
1 inch = 20 ft.

LEGEND

NEW RIGHT-OF-WAY PAVEMENT
(SEE CROSS-SECTION DETAIL THIS SHEET)

NOTE:
GUTTER INLET FRAME AND GRATE (R-3457-C2) MUST BE ADJUSTED TO MATCH THE SLOPE AND ELEVATION OF THE DECELERATION LANE.

NOTE:
FOR INSTALLATION OF STORM, SANITARY, AND WATER UNDER CITY STREETS AND COVER REQUIREMENTS, SEE SHEET No. C801 ON THE TRENCH DETAIL.

THERE ARE TO BE NO WATER VALVES OR MANHOLES WITHIN THE PAVEMENT, CURB, OR SIDEWALK WITH THE EXCEPTION OF CURB INLETS AND EXISTING STORM STRUCTURES.

ALL PAVEMENT STRIPING TO BE THERMOPLASTIC.

ALL PREFORMED TAPE ARROWS AND "ONLY" MARKINGS TO BE 3M-380i.

DECORATIVE SIGNS, SPRINKLER SYSTEMS, TREES, LANDSCAPING MOUNDS, FENCES, LIGHT POLES OR OTHER SUCH AMENITIES ARE NOT PERMITTED WITHIN THE RIGHT-OF-WAY.

R-3287-15
Combination Inlet Frame, Grate, Curb Box

Heavy Duty

CATALOG NUMBER	GRATE TYPE	SQ. FT. OPEN	WEIR PERIMETER LINEAR FEET
R-3287-15	V	4.4	7.3

165 lbs/syd QC/QA-HMA-SMA, 3, 70-22, Surface, 9.5mm
275 lbs/syd QC/QA-HMA, 3,70-22, Intermediate, 19.0mm
440lbs/syd QC/QA-HMA, 3, 64-22, Base, 19.0mm
300 lbs/syd QC/QA-HMA,5, 76-22, Intermediate, OG 19.0mm
440 lbs/syd QC/QA-HMA, 3, 64-22, Base, 19.0mm
Subgrade Treatment (Type I)

PAVEMENT WITHIN RIGHT-OF-WAY 146TH STREET
NOT-TO-SCALE

R-3448 To R-3457-C2 Series
Rectangular Gutter Inlet Frames and Grates

Heavy Duty

Furnished standard with rectangular base except as noted.

Catalog No.	Dimensions in Inches A	B	C	E	F	G	H
R-3457-C2***△§	38 x 48	1 3/4	**	42 x 54	5 1/2	1 7/8 x 21 3/8	1 1/4

**Frames provided with lugs supporting grate at corners.
***Frame and grate furnished in two pieces.

MANHOLE SOLID LID CASTING

Westfield PUBLIC WORKS

RENEE LYNN GOFF REGISTERED No. 10403860 STATE OF INDIANA PROFESSIONAL ENGINEER

TOWN OF WESTFIELD, INDIANA

Renee Lynn Goff 2/23/07
DATE

FIGURE ST-7

DATE	MARK	REVISIONS	BY

JAMES O RINEHART IV REGISTERED No. 10200495 STATE OF INDIANA PROFESSIONAL ENGINEER

THIS DRAWING IS NOT INTENDED TO BE RECOGNIZED AS A RETRACEMENT, ORIGINAL BOUNDARY SURVEY, A ROUTE SURVEY OR A SURVEYOR LOCATION REPORT.

CERTIFIED: 1/27/11

STOEPPELWERTH & ASSOCIATES, INC.
CONSULTING ENGINEERS & LAND SURVEYORS
7965 East 106th Street, Fishers, IN 46038-2505
Phone: (317) 849-5935 Fax: (317) 849-5942
Toll Free: (800) 728-6917

ENTRANCE PLAN
STORAMERICA

HAMILTON COUNTY, INDIANA
WESTFIELD

DRAWN BY: KRG
CHECKED BY: BKR

SHEET NO.
C403

S & A JOB NO.
59815RAD

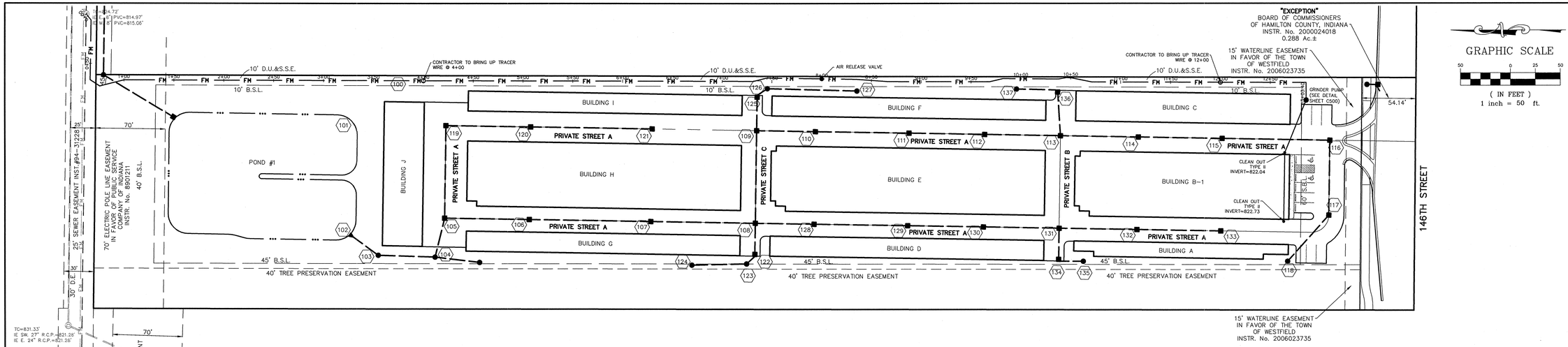

GRAPHIC SCALE

50 0 25 50

(IN FEET)
1 inch = 50 ft.

BY	MARK	DATE	REVISIONS
KRG			
KRG	1	3/7/11	REVISED AIR REALEASE MANHOLE DETAIL
	2	3/5/11	REVISED DETAILS AND NOTES

JAMES O. RINEHART
REGISTERED
No. 10200495
STATE OF INDIANA
PROFESSIONAL ENGINEER

THIS DRAWING IS NOT INTENDED TO BE USED AS A RETRACEMENT OF AN ORIGINAL BOUNDARY SURVEY, A ROUTE SURVEY OR A SURVEYOR LOCATION REPORT.

CERTIFIED: 1/27/11

STOEPPELWERTH & ASSOCIATES, INC.
CONSULTING ENGINEERS & LAND SURVEYORS
7965 East 106th Street, Fishers, IN 46038-2505
Phone: (317) 849-5935 Fax: (317) 849-5942
Toll Free: (800) 728-6917

SANITARY SEWER PLAN & PROFILES

STORAMERICA

HAMILTON COUNTY, INDIANA

WESTFIELD

DRAWN BY: KRG | CHECKED BY: BKR

SHEET NO. C500

S & A JOB NO. 59815RAD

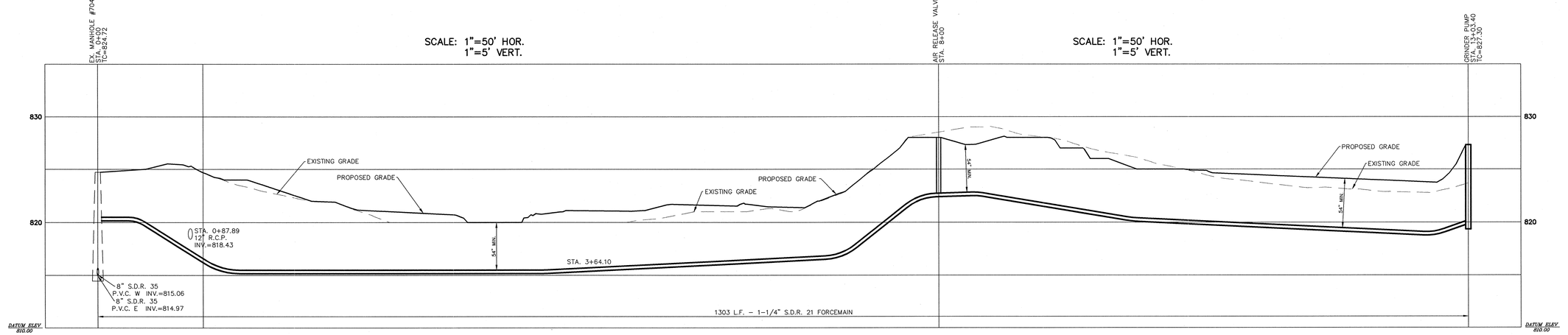

DENOTES FULL DEPTH GRANULAR BACKFILL

NOTES:
1. CONTRACTOR SHALL INSTALL TRACER WIRE ALONG ENTIRE FORCE MAIN AND BRING UP EVERY 400' FOR LOCATION PURPOSES.

2. CONTRACTOR SHALL CONTACT WESTFIELD PUBLIC WORKS INSPECTOR WHEN THE CONNECTION TO THE EXISTING MANHOLE IS MADE. 317-804-3146 OR 317-804-3149

3.NO DOGHOUSE MANHOLES ARE ALLOWED.

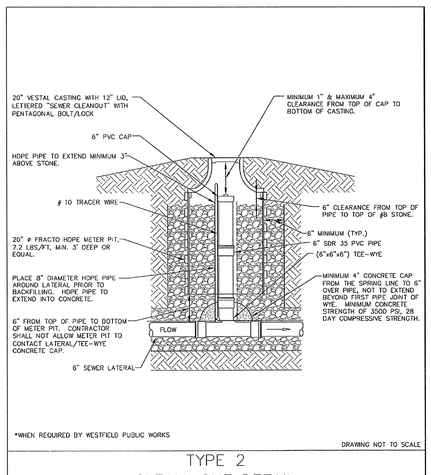

DRAWING NOT TO SCALE

TYPE 2
CLEAN-OUT DETAIL

Westfield PUBLIC WORKS

TOWN OF WESTFIELD, INDIANA

10/3/06
DATE

FIGURE S-15

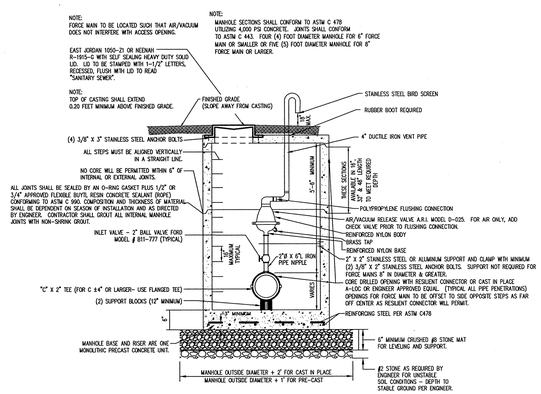

NOTE: DIMENSION "C" IS SIZE OF FORCE MAIN

CLOSED BOTTOM AIR/VACUUM RELEASE MANHOLE DETAIL

NO SCALE

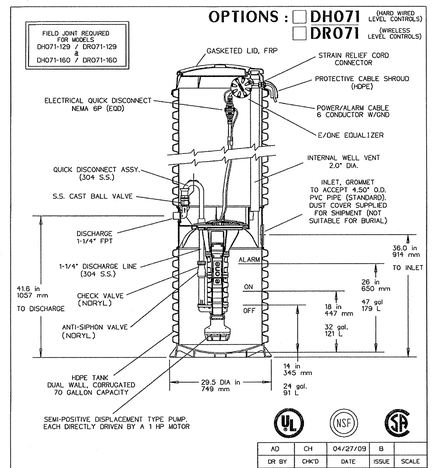

AD	CH	04/27/09	B	
DR BY	CH'D	DATE	ISSUE	SCALE

SEWER SYSTEMS

MODEL DH071 / DR071
DETAIL SHEET

NA0050P02

SECTION 02732 - FORCE MAINS

PART 1 - GENERAL

1.1 DESCRIPTION

A. Scope: Specifications for force main pipe, fittings, valves, and appurtenances are included in this Section.

B. Definitions: All pipe, fitting and valve size, and all reference to pipe diameter on the drawings or in the specifications are intended to be nominal size or diameter and shall be interpreted as such.

1. AWWA, where used in these specifications, shall mean American Water Works Association.
2. ANSI, where used in these specifications, shall mean American National Standard Institute.
3. ASTM, where used in these specifications, shall mean American Society for Testing & Materials.

C. This specifications cover the following types of material:

1. Ductile Iron.
2. Polyvinyl Chloride (PVC).
3. HDPE

1.2 PIPE MARKING

Each length of pipe shall bear the name or trademark of the manufacturer, the location of the plant, and the date of manufacture. Each length shall likewise be marked to designate the class or strength of the pipe. The marking shall be made on the exterior or interior of the pipe barrel near the bell or groove end and shall be plainly visible. Pipe shall have permanently extruded stripes on three (3) or four (4) sides according to the following schedule:

Sanitary Sewer: Green Stripes

1.3 RELATION TO WATER MAINS AND STORM SEWERS

A. All storm sewer crossings must be in accordance with the Town of Westfield's Stormwater Technical Standards Manual, Section 501.01. Should specific conditions prevent this separation, the Contractor shall notify the Westfield Public Works Department for specific instructions regarding the treatment of the separation.

B. All water main crossings must be in accordance with 327 IAC 3-6-9 and 327 IAC 8-3.2-9.

C. Sewers must be laid at least 10 feet horizontally from any existing or proposed water main. The distance is to be measured outside edge to outside edge. Should specific conditions prevent this separation, the Contractor shall notify the Westfield Public Works Department for specific instructions regarding the treatment of the separation. Special conditions may allow installation of the sewer closer to a water main, provided that the water main is in a separate trench or on an undisturbed earth shelf located on one side of the sewer and at an elevation so the bottom of the water main is at least 18 inches above the top of the sewer. It will be necessary to install 150 psi water main pipe and joints as sewer pipe for the congested areas.

D. Whenever the sewer crosses a water main, it should be laid at least 18 inches below the main, or the water main should be relaid with fittings to cross over the sewer. The crossing shall be arranged so that the sewer joints will be equidistant and as far as possible from the water main joints. Any joints within a distance of 10 feet from either side of the crossing must be compression joints. All crossings must be at a minimum of 45 degrees from center lines of the sanitary sewer and the water main.

E. When it is impossible to obtain proper horizontal and vertical separation as stipulated above, the sewer shall be designed and constructed equal to water pipe, and shall be pressure tested to assure watertightness prior to backfilling. Maximum distance between sewer pipe joints and water pipe shall be provided where vertical separation is a problem.

PART 2 - PRODUCTS

2.1 GENERAL

All pipe, fittings, valves, and appurtenances shall be as shown on the drawings and specified in this Section. All pipe, fittings, valves, and appurtenances shall be new and unused.

2.2 DUCTILE IRON PIPE

A. Ductile iron pipe shall meet the requirements of ANSI Specification A21.51 (AWWA Standard C151) and the additional requirements specified herein. Design and manufacture pipe for a working pressure of 150 psi plus 100 psi surge and a safety factor of 2 and a depth of cover indicated on the drawings and specified in this Section. Minimum thickness pressure class shall be class 350.

1. Pipe joints shall be push-on type. Joints shall meet the requirements of ANSI/AWWA A21.11/C111. Restrained joints shall be Lok-Fast, Lok-Tyte, or equal.
2. Mark each length of pipe. Marking shall include pipe class, casting period, manufacturer's name or trademark, and year of manufacture. Marking shall meet the requirements of ANSI Specification A21.51 (AWWA Standard C151).

B. Lining and Coating: Outside surfaces of the pipe and fittings shall be bituminous coated complying with ANSI/AWWA A21.51/C151 and ANSI/AWWA A21.10/C110.

2.3 PVC PIPE

A. Polyvinyl Chloride (PVC) Force Mains

1. Pipe

a. Polyvinyl chloride pipe shall meet the requirements of AWWA Standard C900. The color of the pipe shall be green. Design and manufacture pipe for a working pressure of 150 psi plus 100 psi surge and a safety factor of 2 and a depth of cover indicated on the drawings and specified in this Section. The dimension ratio shall not be greater than 18.
b. Polyvinyl chloride pipe shall have cast-iron-pipe-equivalent outside diameter.
c. Pipe joints shall be push-on type. Joints shall meet the requirements of AWWA Standard C900. Do not use solvent-cement joints.
d. Mark each length of pipe. Markings shall meet the requirements of AWWA Standard C900.

2. The inside surface of the pipe for pipe 4 inches and larger shall be mechanically grit blasted to white metal and then lined with a virgin polyethylene material having a nominal thickness of 40 mils or a two-component coal tar epoxy compound (Duraline) having a nominal thickness of 45 mils.
3. The linings shall have a minimum dry film thickness of 40 to 45 mils. The thickness shall generally equal or exceed 40 to 45 mils throughout the pipe, except at the ends where the thickness may taper for a distance of 4 inches to a minimum 10 mils thickness.

2.4 HIGH DENSITY POLYETHYLENE (HDPE) FORCEMAIN

A. Pipes: HDPE forcemain pipe shall meet the requirements for Type III, Grade P345 Polyethylene Material as defined in ASTM Specification D-1248 (PE 3408). The minimum pressure class/SDR rating acceptable shall be Class 200/SDR 11. The pipe shall be DIPS and shall have an interior diameter no less than the piping that it is connected to.

B. Joints: Joints shall be of a heat fusion joining system. Pipe and fittings shall be thermal butt fusion, saddle fusion, or socket fusion in accordance with manufacturer recommended procedures and ASTM D-2161. At the point of fusion, the outside diameter and minimum wall thickness of the fitting shall match the outside diameter and minimum wall thickness specifications of ASTM D-1248 for the same size pipe.

Joining of the pipes and fittings shall be performed in accordance with ASTM D-2774. Depending upon the installation requirements and site location, joining shall be performed within or outside the excavation. Joints of the pipe sections shall be smooth on the inside and internal projection beads shall not be greater than 3/16 inch.

The tensile strength at yield of the butt-fusion joints shall not be less than the pipe. A specimen of the pipe cut across the butt-fusion joints shall be tested in accordance with ASTM D-638

The manufacturer shall provide fusion training. The contractor and the onsite joint inspector shall be trained by the manufacturer or manufacturer's authorized representative.

The fusion equipment and operator shall be required to demonstrate successful field experience. Regarding fusion over 36" capability, the fusion unit shall be field tested for a period of five years and the fusion operator shall have pipe size experience of the same size pipe on this project for five years or longer.

C. Fittings: All fitting shall be provided as indicated on the plans. HDPE Fittings shall be of the same material and class as the pipe and shall be manufactured by the manufacturer of the pipe. HDPE Elbows, tees, and wyes shall be manufactured by mitered fabrication. The manufacturer shall have a written specification for all standard mitered fittings, which establishes Quality Control criteria and tolerances. The manufacturer may be required to demonstrate its ability to produce product required by this specification.

Mechanical joint anchor fittings (MJ Adapter or Harvey Adapter) shall be used to transition from ductile iron to HDPE and from HDPE to PVC. The fitting shall be stronger than the pipe in that when it is subjected to tensile stress the pipe will pull apart before the fitting will pull out and the pipe will blow before the fitting will rupture under pressure.

The MJ Adapter shall have a pre-installed stainless steel stiffener, in accordance with Plastic Pipe Institute (PPI) recommendations, to neutralize point-loading, ACQ, creep and loss of gasket seal due to diameter contraction. The stiffener shall be engineered sufficiently thick to avoid redial buckling due to gasket pressure.

The MJ Adapter requires longer bolts and shall be sold with the modified longer bolt kit to avoid construction crew delays or improper installation with too short bolts.

All fittings for forcemains or pressure rated fittings shall be rated according to the manufacturer's written specifications, and clearly labeled on the fittings as such.

D. Installation: The installation shall conform to the requirements of the manufacturer, the AWWA Standard, and as indicated on the plans and specified herein.

E. Marking and Certification: Each length of HDPE sanitary sewer shall be clearly marked with the Manufacturer's Name, Tradename or Trademark, Nominal pipe size, Pipe Stiffness, Production Code/Extrusion Code, Material Cell Class Designation and ASTM number.

The pipe manufacturer shall provide certification that the stress regression testing has been performed on the specific product. The said certification shall include a stress live curve per ASTM D-2837. The stress regression testing shall have been performed in accordance with ASTM D-2837, and the manufacturer shall provide a product supplying a minimum Hydrostatic Design Basis of 1,600 psi as determined by ASTM D-2837. This certification shall also state that the pipe was manufactured from one specific resin in compliance with these specifications. The certificate shall state the specific resin used and its source.

2.5 FITTINGS

A. Fittings shall be ductile iron. Fittings shall meet the requirements of ANSI/AWWA A21.10/C110 and ANSI/AWWA A21.53/C153. Design and manufacture fittings for a pressure rating of 150 psi.

1. Fitting joints shall be restrained mechanical joints or restrained push-on joints. Joints shall meet the requirements of ANSI/AWWA A21.11/C111. Restrained joints shall be used instead of thrust blocking. Restrained joints shall be Lok-Fast, TR Flex, Lok-Ring, or equal. Pipe connecting to restrained joint fittings shall also have restrained joints as indicated on the drawings and specified in this Section.
2. Mark each fitting. Marking shall meet the requirements of ANSI/AWWA C110.

2.6 ADAPTERS

A. Adapters from polyvinyl chloride force mains to victaulic or flange joint valves or fittings shall be ductile iron. Adapters shall meet the requirements of ANSI/AWWA C110. Design and manufacture adapters for a pressure rating of 150 psi.

B. Line the inside surfaces of adapters with cement mortar lining and bituminous seal coating. Cement mortar lining and bituminous seal coating shall meet the requirements of ANSI/AWWA C104/A21.4. Coat outside surfaces of adapters with bituminous coating. Outside coating shall meet the requirements of ANSI/AWWA C110.

C. Adapter ends connecting to polyvinyl chloride force mains shall have plain ends or mechanical joints. Mechanical joints shall meet the requirements of ANSI/AWWA C111/A21.11.

D. Adapter ends connecting to victaulic or flange joint valves or fittings shall have joints complying with the specifications for the applicable valves or fittings.

E. Adapters from ductile iron force mains to victaulic or flange joint valves or fittings shall be cast iron or ductile iron. Adapters shall meet the requirements of ANSI/AWWA C110. Design and manufacture adapters for a pressure rating of 150 psi.

1. Adapter ends connecting to ductile iron force mains shall have plain ends, push-on joints, mechanical joints, or restrained push-on joints. Adapters with plain ends, push-on joints, or mechanical joints may be used where restrained joints are not required. Adapters shall have restrained push-on joints where restrained joint piping is required as indicated on the drawings and specified in this Section. Mechanical joints and push-on joints shall meet the requirements of ANSI/AWWA A21.11/C111. Restrained joints shall be Lok-Fast, Lok-Tyte, or equal.

2. Adapter ends connecting to victaulic or flange joint valves or fittings shall have joints complying with the specifications for the applicable valves or fittings.
3. Gaskets

a. Gaskets for polyvinyl chloride push-on joints shall meet the requirements of AWWA Standard C900.
b. Gaskets for mechanical joints shall meet the requirements of ANSI/AWWA C111/A21.11.

4. Nuts and Bolts

a. Nuts and bolts for mechanical joints shall be high strength, heat treated, cast iron. Nuts shall be hexagon nuts. Bolts shall be tee head bolts. Nuts and bolts shall meet the requirements of ANSI/AWWA C111/A21.11.

F. Gaskets for mechanical joints and push-on joints shall meet the requirements of ANSI/AWWA A21.11/C111.

G. Nuts and bolts for mechanical joints shall be high strength, heat treated, cast iron. Nuts shall be hexagon nuts. Bolts shall be tee head bolts. Nuts and bolts shall meet the requirements of ANSI/AWWA A21.11/C111.

1. Nuts and bolts for restrained push-on joints shall meet the requirements of the joint manufacturer.

H. Polyethylene encasement for ductile iron force mains, when specifically called for on the drawings, shall meet the requirements of ANSI Specification A21.5 (AWWA Standard C105).

2.7 VALVES AND VALVE BOXES

A. Eccentric Type Plug Valves: Plug valves shall be nonlubricated eccentric type with resilient faced plugs having mechanical joint or flanged ends.

1. Port areas of 4-inch to 20-inch valves shall be at least 80% of full pipe area. Port area for 24-inch and larger valves shall be at least 70% of full pipe area.
2. Valve seats, valve plug stem sleeves and plug stem bushings shall be fabricated of materials which are corrosion and abrasive resistant. The corrosion resistance shall be such that exposure over a period of five years to domestic wastewater, industrial wastewater, domestic sludges or industrial sludges containing sulfuric acid, hydrochloric acid, acetic acid, mineral oils, vegetable

oils, polymers, esters or acetones shall not result in sufficient corrosion to interfere with the serviceability of the plug valve.
3. Seals shall be capable of being replaced while the line and valve remain in service, if under submerged conditions, thereby eliminating the need to take process units out of service.
4. All exposed nuts, bolts, springs, and washers shall be plated with corrosion resistant material. Means of actuation shall be by lever, gear actuator, tee wrench, extension stem, or floor stand, as indicated.
5. All plug valves shall be equipped with an underground operator.
6. Plug valves 10-inch and larger shall be equipped with gear actuators. All gearing shall be enclosed and lubricated with seals provided on all shafts to prevent entry of dirt and fluid into the actuator. All shaft bearings shall be furnished with permanently lubricated bronze bearing bushings. Actuator shall clearly indicate valve positions, and an adjustable stop shall be provided to set closing torque. Valve stop shall be positive and shall not move due to repeated operation of the valve.
7. Valves shall be DeZurik Series 100, Homestead Ballcentric, Dresser Style 800 X-Centric, or equal.

B. Gate Valves: Buried gate valves 4-inch and larger shall be full iron body, epoxy fusion bonded inside and out, non-rising stem gate valves. Valves shall meet the requirements of ANSI/AWWA C500 and shall have mechanical joint ends. Mechanical joints and joint accessories shall meet the requirements of ANSI/AWWA A21.11/C111. Valve opening direction shall be consistent with operation of existing valves in the utility in which the valves are installed, unless otherwise directed by the Engineer.

1. Three-inch buried gate valves shall be iron body, non-rising stem gate valves. Valves shall meet the requirements of ANSI/AWWA C500, except ends shall be screwed. Screwed ends shall meet the requirements of ANSI B16.3. Valve opening direction shall be consistent with operation of existing valves in the utility in which the valves are installed, unless otherwise directed by the Engineer.
2. Gate valves 4-inch and larger installed above ground or in structures shall be iron body, outside screw, and yoke gate valves. Valves shall meet the requirements of ANSI/AWWA C500, except those parts of ANSI/AWWA C500 only applicable to non-rising stem gate valves and wrench nuts. Outside screw and yoke gate valves shall have flange joint ends and malleable iron handwheels. Flange joints and accessories shall meet the requirements of ANSI/AWWA C110. Nuts and bolts shall be cadmium plated. Gaskets shall be full face and shall be velumoid, or equal.

3. Gate valves smaller than 4-inch installed above ground or in structures shall be bronze, 125 lb. S.W.P. double disc, screwed-in bonnet, rising stem, inside screw gate valves with screwed ends and malleable iron handwheels. Valves shall meet the requirements of Federal Specification WW-V-54d for Class A, Type III valves.

C. Valve boxes for plug valves and gate valves shall be cast iron. Valve boxes shall be two piece or three piece type. Each two piece box shall be complete with bottom section, top section, and cover. Each three piece box shall be complete with base, center section, top section, and cover. Valve boxes shall be extension type with slide or screw type adjustment. Each base and bottom section shall be the proper size for the valve served. Each valve box assembly shall be the proper length for the valve served. The minimum thickness of metal shall be 3/16 inch. Valve box cover shall be blank with no wording.

2.8 SEWAGE AIR AND VACUUM VALVES

Sewage combination air and vacuum valves shall be as follows:

Size	Specification
2" x 1"	Apco No. 401 SC, Val-Matic Co. No. 301 BWA, or equal
2" x 2"	Apco No. 402 SC, Val-Matic Co. No. 302 BWA, or equal
3" x 3"	Apco No. 403 SC, Val-Matic Co. No. 303 BWA, or equal

2.9 AIR AND VACUUM VALVE CHAMBERS

A. Air and vacuum valve chambers shall be 4-foot diameter precast concrete manhole barrels with precast concrete flat slab tops. Precast manhole barrels shall meet the requirements of ASTM C478.

B. Air and vacuum valve chamber access frames and cover shall be Neenah R-1915-G, or equal. Cast the word "SEWER" in each cover.

2.10 BURIED INDICATING TAPE

A. Metallic core or metallic-faced, acid- and alkali-resistant, polyethylene plastic warning tape manufactured specifically for warning and identification of buried utility lines to be placed along the entire length of the force main, metallic and non-metallic. The tape shall have a 3-inch-minimum width, color coded for the intended utility with warning and identification imprinted in bold black letters continuously over the entire tape length. Warning and identification to read "CAUTION, BURIED

FORCE MAIN BELOW" or similar wording. Color and printing shall be permanent, unaffected by moisture or soil.

B. The tape shall have a minimum strength of 1500 psi lengthwise and 150 psi crosswise, with a maximum 350 percent elongation. The tape shall be able to be detected with a metal detector when the tape is buried up to 3 feet deep.

C. For sanitary force main, locator wire shall be installed along the top and taped to the pipe. Access points for the locator wire shall be placed every 400 feet. Access points shall be 4-inch diameter PVC with threaded metallic caps painted green. Pipe shall be flush with grade. Wire shall be pulled to within 6-inches of the top of the pipe. For trench installations one (1) locate wire is acceptable. For trenchless installations two (2) locate wires are required for redundancy.

PART 3 - EXECUTION

3.1 HANDLING AND CUTTING PIPE

A. Pipe and fittings shall be handled carefully to avoid cracking or abrasion of the pipe coating.

B. Any fitting showing a crack and any fitting or pipe which has received a severe blow that may have caused an incipient fracture, even though no such fracture can be seen, shall be marked as rejected and removed at once from the work.

C. In any pipe showing a distinct crack and in which it is believed there is no incipient fracture beyond the limits of the visible crack, the cracked portion, if so approved, may be cut off by and at the expense of the Contractor before the pipe is laid so that the pipe used may be perfectly sound. The cut shall be made in the sound barrel at a point at least 12 inches from the visible limits of the crack.

D. All cutting shall be done with a machine having steel cutters or knives adapted to the purpose. All cut ends shall be examined for possible cracks caused by cutting.

3.2 INSTALLATION OF PIPING

A. All piping shall be installed to accurate lines and grades and shall be supported, guided, or anchored as shown, as specified, or as necessary.

B. Restrained joints shall be provided at vertical and horizontal deflection points, tees, and crosses, or as directed by the Engineer.

C. All piping installations shall be done in a neat and workmanlike manner.

D. Install identification/location tape over all new non-metallic force main piping. See specification section 02558 "Identification/Location Tape" and article 2.10 of this standard for material and installation requirements.

3.3 LAYING PIPE AND FITTINGS

A. No defective pipe or fittings shall be placed in the work, and any piece found to be defective after having been placed shall be removed and replaced by a second piece and at the expense of the Contractor.

B. Every pipe and fitting shall be cleaned of all debris, dirt, and other foreign material before being laid, and shall be kept clean until accepted in the completed work.

C. When bell and spigot pipe is laid, the bell of the pipe shall be cleaned of tar or other obstruction and wiped out before the clean spigot of the next pipe is inserted into it. The new pipe shall then be shoved home firmly against the back of the bell and securely held until the joint has been completed.

3.4 PIPE BEDDING AND HAUNCHING

A. Each pipe section shall be laid in a firm foundation of bedding material and haunched and backfilled with care.

B. Prior to pipe installation, carefully bring bedding material to grade along the entire length of pipe to be installed. To provide adequate support for the pipe, the following bedding procedures are recommended.

1. When Class I material is used for bedding, little or no compaction is necessary due to the nature of the angular particles. A depth of 4 to 6 inches is generally sufficient to provide uniform bedding. If Class I material is used for bedding, it must also be utilized for haunching up to or higher than the spring line of the pipe to avoid loss of side support through migration of Class II haunching material into the bedding.

C. Bedding material shall have a minimum thickness beneath the pipe of 4 inches (100 mm) or one-eighth of the outside diameter of the pipe, whichever is greater, and shall extend up the sides of the pipe one-sixth of the outside diameter of the pipe.

D. The rigid pipe, such as concrete or ductile iron, backfill between the bedding material and a plane 12-inches (300 mm) over the top of the pipe shall be hand-placed finely divided earth, free from debris and stones, or granular backfill if required.

E. For flexible pipe such as PVC, the placement of embedment material, consisting of bedding, haunching, and initial backfill, must be done with care. The ability of the pipe to withstand loading in a trench depends a large part on the method employed in its installation. Crushed stone shall be used to backfill between the bedding material and a plane 12-inches over the top of pipe, and shall be hand placed. Care must be taken to not cause damage by compacting the material directly over the pipe.

F. In yielding subsoils, the trench bottom shall be undercut to the depth necessary and backfilled with graded, crushed stone to form a firm foundation.

G. Where excavation occurs in rock or hard shale, the trench bottom shall be undercut and a minimum of 6-inches (150 mm) crushed stone bedding placed prior to pipe installation.

3.5 JOINTING

A. Polyvinyl Chloride (PVC) Push-On Joints

1. Clean the bell and spigot of the pipe sections being joined. Wipe the outside of each spigot and inside of each bell clean of all dirt and other foreign matter. Wipe each bell and spigot dry. Wipe each gasket clean of all dirt, dust, and other foreign matter.
2. Seat a gasket in the bell of the receiving pipe. Thoroughly lubricate the spigot end of the pipe being installed. Use the lubricant furnished by the pipe manufacturer. Center the spigot end of the pipe being installed in the bell of the receiving pipe. Support the pipe being installed so the pipe being installed is jointed along the centerline of the receiving pipe. Push or pull the pipe being installed home. After jointing, check the gasket to ensure the gasket has not pushed out of its seat and the gasket is uniformly compressed around the pipe.
3. Deflect pipe after jointing, if deflection is required. The amount of deflection shall not exceed the limits recommended by the pipe manufacturer.

B. Mechanical Joints

1. Remove lumps, blisters, and excess bituminous coating from the bell and spigot end of each iron pipe, fittings, and valve. Wire brush the outside of each iron pipe or fitting spigot and inside of each bell. Wipe each bell, spigot, and ring gland clean of all dirt, oil, grease, and other foreign matter. Wipe each bell, spigot, and ring gland dry. Wipe each gasket clean of all dirt, dust, and other foreign matter.
2. Brush each spigot and gasket with soapy water. Slip a ring gland followed by a gasket over the spigot. Center the end of the pipe, fitting, or valve being installed on the end of the receiving pipe, fitting, or valve. Support the pipe, fitting, or valve being installed so the pipe, fitting, or valve being installed is jointed along the centerline of the receiving pipe, fitting, or valve. Push or pull the pipe, fitting, or valve being installed home. Push the gasket into position. Move the gland into position against the face of the gasket. Loosely assemble the joint bolts and nuts. Evenly tighten the nuts using a torque wrench. The torque shall be within the range listed in the following table:

Pipe Size	Bolt Size	Torque Range
4" thru 24"	3/4"	75 to 90 ft.-lb.
30" and 36"	1"	100 to 120 ft.-lb.
42" and 48"	1-1/4"	120 to 150 ft.-lb.

3. Deflect pipe, fittings, or valves after jointing, if deflection is required. The amount of deflection shall not exceed the limits shown in the following table:

Pipe Size	Maximum Deflection Angle	Maximum Deflection Based Upon 18-Foot Pipe Length
4"	8°-18'	31"
6"	7°-7'	27"
8"	5°-21'	20"
10"	5°-21'	20"
12"	5°-21'	20"
14"	3°35'	13-1/2"
16"	3°35'	13-1/2"
18"	3°0'	11"
20"	3°0'	11"
24"	2°23'	9"
		Maximum

Pipe Size	Maximum Deflection Angle	Deflection Based Upon 18-Foot Pipe Length
30"	2°23'	9"
36"	2°5'	8"
42"	2°0'	8"
48"	2°0'	8"

C. Flange Joints

1. Remove antirust coating from machined surfaces. Clean joint surfaces of the pipe, fittings, and valves being joined. Wipe surfaces clean of all dirt, oil, grease, and other foreign matter. Wipe surfaces dry. Wipe each gasket clean of all dirt, dust, and other foreign matter.
2. Align the flange of the pipe, fitting, or valve being installed with the flange of the receiving pipe, fitting, or valve. Support the pipe, fittings, and valves being joined so the flanges are properly aligned. Lubricate bolts and nuts with a graphite and oil mixture prior to installation of bolts and nuts. Install gasket between the flanges. Loosely assemble bolts and nuts. Check gasket to ensure the gasket is in proper position. Evenly tighten bolts and nuts. Tighten bolts and nuts so the joint will not leak. Do not overtorque bolts and nuts.

3.6 RESTRAINING AND SUPPORTS

A. Thrust Blocking

1. Construct thrust blocks of concrete having a 28-day compressive strength of not less than 2,000 psi.
2. Lubricate fitting surfaces and wrap fitting with plastic to prevent bonding between fittings and thrust blocks.
3. Construct thrust blocks between fittings to be restrained and undisturbed soil. The area of thrust blocking bearing on undisturbed soil shall not be less than the area indicated on the drawings. Construct thrust blocking so pipe and joints are accessible for repair and joint flexibility is not impaired.

B. Restrained Joint Piping: Restrained joint piping shall be as specified in this Section. Distance from fitting to end of restraint shall not be less than that indicated on the drawings.

C. Pipe Supports

1. Furnish and install supports required to hold pipe, fittings, and valves at the lines and grades indicated on the drawings and without strain upon pipe, fittings, and valves.
2. Support exposed piping by suitable saddle stands, concrete piers, or hangers.
3. Locate supports where necessary and not less than 8 feet on center.

3.7 HYDROSTATIC TEST

A. A leakage test must be successfully performed on the new force main in accordance with the following provisions:

1. Said test shall include all force main in this contract as shown on the drawings. The Contractor shall make arrangements with the Westfield Public Works Department or designee for scheduling the test after the piping has been accepted as being ready for testing. All concrete thrust blocks shall have been in place for a period of at least ten days prior to the test. The test shall be performed on the day mutually agreed upon and in the presence of the Westfield Public Works Department or designee.
2. Water for testing will be obtained by the Contractor at his cost. The Contractor shall furnish all necessary equipment, piping, pumps, fittings, gauges, and operating personnel to properly conduct the test. The system shall be tested in conformance with Section 13 of AWWA Specification C600 at static pressure of 100 pounds per square inch over a period of not less than eight consecutive hours. The system will not be acceptable until all leaks have been repaired to the satisfaction of the Westfield Public Works Department or designee.
3. At the option of the Contractor, the force main may be tested in sections approximately 500 feet in length (subject to the approval of the Westfield Public Works Department or designee); and upon satisfactory completion of the leakage test, the trench shall be backfilled as specified.
4. During the filling of the pipe and before the application of the specified test pressure, all air shall be expelled from the pipe line, if necessary, by means of taps at points of highest elevation; and after completion of the test, the taps shall be tightly plugged, unless otherwise specified.

B. When push on joints are used, the Contractor shall completely fill the pipe with water and apply sufficient pressure to set the joint gaskets before commencing the leakage test outlined above.

END OF SECTION 02732

DATE	MARK	REVISIONS	BY

JAMES O. RINEHART IV REGISTERED No. 10200495 STATE OF INDIANA PROFESSIONAL ENGINEER

THIS DRAWING IS NOT INTENDED TO BE REPRESENTED AS A RETRACEMENT OR ORIGINAL BOUNDARY SURVEY, A ROUTE SURVEY OR A SURVEYOR LOCATION REPORT.

CERTIFIED: 1/27/11

STOEPPELWERTH & ASSOCIATES, INC.
CONSULTING ENGINEERS & LAND SURVEYORS
7965 East 106th Street, Fishers, IN 46038-2505
Phone: (317) 849-5935 Fax: (317) 849-5942
Toll Free: (800) 728-6917

FORCEMAIN SPECIFICATIONS

STORAMERICA

WESTFIELD HAMILTON COUNTY, INDIANA

DRAWN BY: KRG CHECKED BY: BKR

SHEET NO. C501

S & A JOB NO. 59815RAD

S:\59815RAD\dwg\C501-Force Main Specs.dwg, Layout1, 3/3/2011 1:47:56 PM, KGilson, 1:1

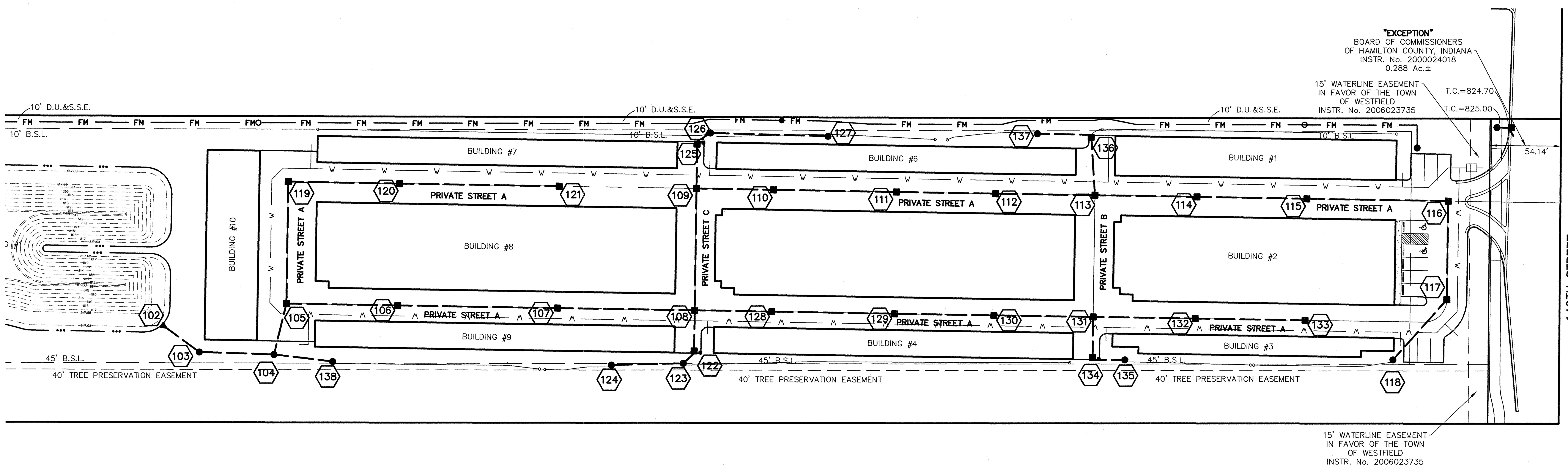

GRAPHIC SCALE

50 0 25 50

(IN FEET)
1 inch = 50 ft.

NOTES:

ALL STORM STRUCTURES TO RECEIVE SOLID LID CASTINGS ARE TO BE CONSTRUCTED TO PROVIDE ONE 4" RISER RING NO MORE, NO LESS TO ACHIEVE PLAN RIM GRADE.

ALL YARD INLETS ARE TO BE CONSTRUCTED AT A TOLERANCE OF +0.00' TO -0.20' OF PLAN GRADE.

ALL STORM SEWER CASTINGS SHALL BE LABELED "DUMP NO WASTE-DRAINS TO WATERWAY"

ALL STORM CROSSINGS IN RIGHT OF WAY WITH LESS THAN 30" COVER TO FINISH PAVEMENT GRADE WILL BE BACKFILLED WITH #8 STONE

ALL SSD'S (SUBSURFACE DRAINS) WILL NEED TO BE DOUBLE WALL SMOOTH BORE PERFORATED (HDPE) PIPE.

DEBRIS GUARDS ARE TO BE INSTALLED ON ALL OPEN ENDED OUTLETS.

DENOTES FULL DEPTH GRANULAR BACKFILL

SCALE: 1"=50' HOR.
1"=5' VERT.

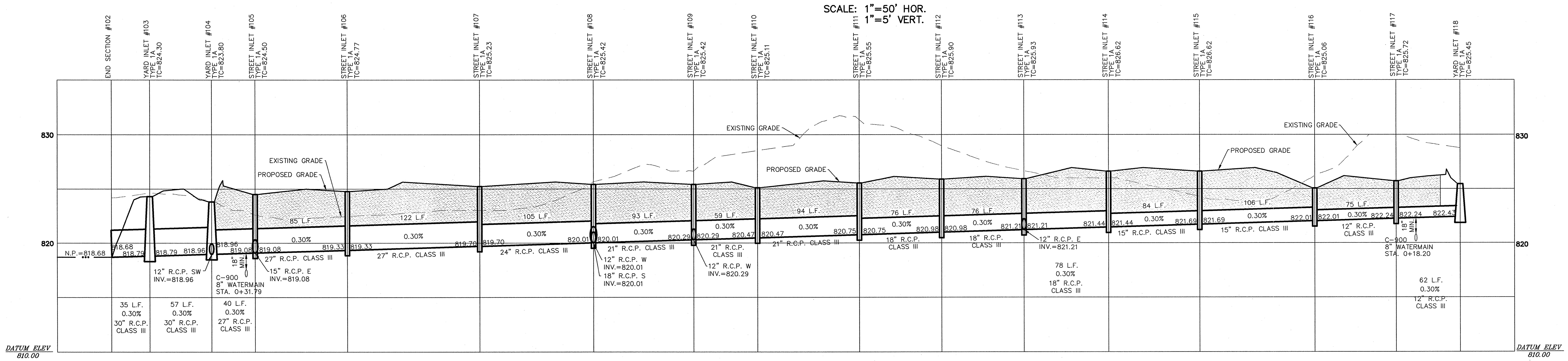

DATE	MARK	REVISIONS	BY
3/17/11		MOVED FORCE MAIN	KRG
3/3/11		REVISED TC'S ON STR 116 AND 118	KRG

JAMES O. RINEHART IV REGISTERED No. 10200495 STATE OF INDIANA PROFESSIONAL ENGINEER

THIS DRAWING IS NOT INTENDED TO BE REPRESENTED AS A RETRACEMENT OR ORIGINAL BOUNDARY SURVEY, A ROUTE SURVEY OR A SURVEYOR LOCATION REPORT.

CERTIFIED: 1/27/11

STOEPPELWERTH & ASSOCIATES, INC.
CONSULTING ENGINEERS & LAND SURVEYORS
7965 East 106th Street, Fishers, IN 46038-2505
Phone: (317) 849-5935 Fax: (317) 849-5942
Toll Free: (800) 728-6917

STORM SEWER PLAN & PROFILES

STORAMERICA

WESTFIELD HAMILTON COUNTY, INDIANA

DRAWN BY: KRG CHECKED BY: BKR

SHEET NO. C600

S & A JOB NO. 59815RAD

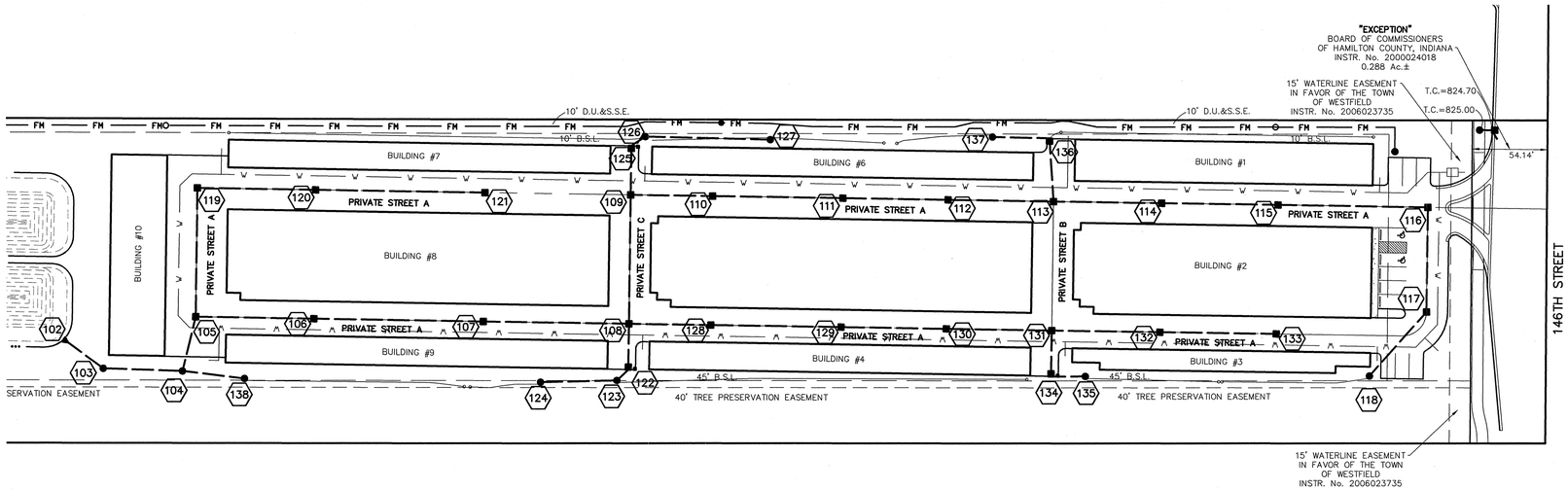

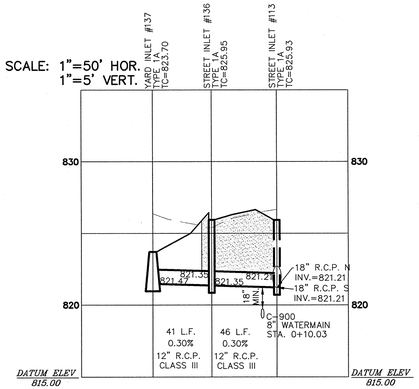

GRAPHIC SCALE

50 0 25 50

(IN FEET)
1 inch = 50 ft.

NOTES:

ALL STORM STRUCTURES TO RECEIVE SOLID LID CASTINGS ARE TO BE CONSTRUCTED TO PROVIDE ONE 4" RISER RING NO MORE, NO LESS TO ACHIEVE PLAN RIM GRADE.

ALL YARD INLETS ARE TO BE CONSTRUCTED AT A TOLERANCE OF +0.00' TO -0.20' OF PLAN GRADE.

ALL STORM SEWER CASTINGS SHALL BE LABELED "DUMP NO WASTE-DRAINS TO WATERWAY"

ALL STORM CROSSINGS IN RIGHT OF WAY WITH LESS THAN 30" COVER TO FINISH PAVEMENT GRADE WILL BE BACKFILLED WITH #8 STONE

ALL SSD'S (SUBSURFACE DRAINS) WILL NEED TO BE DOUBLE WALL SMOOTH BORE PERFORATED (HDPE) PIPE.

DEBRIS GUARDS ARE TO BE INSTALLED ON ALL OPEN ENDED OUTLETS.

DENOTES FULL DEPTH GRANULAR BACKFILL

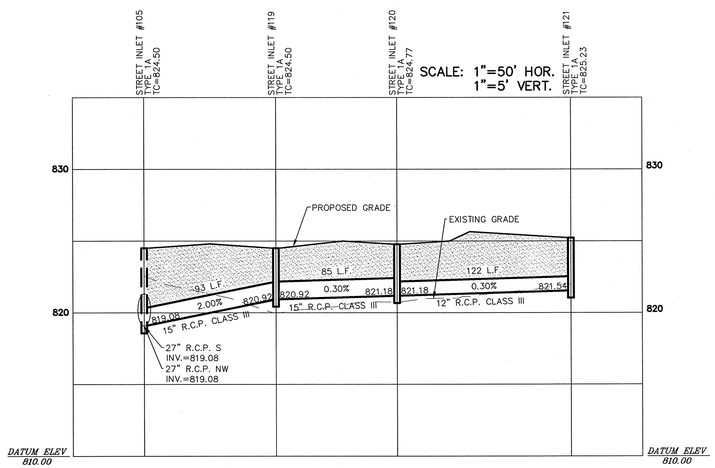

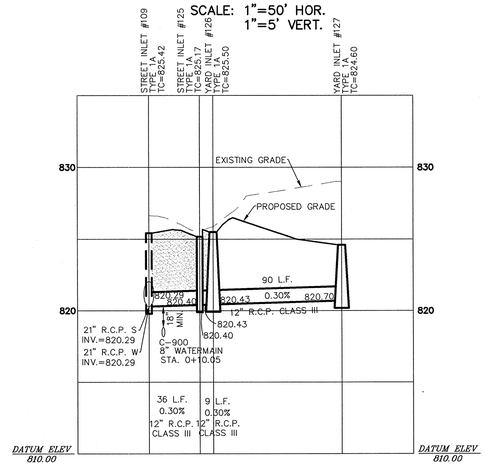

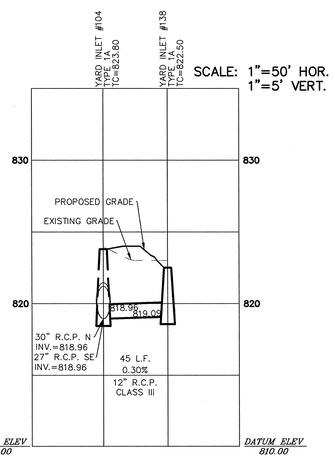

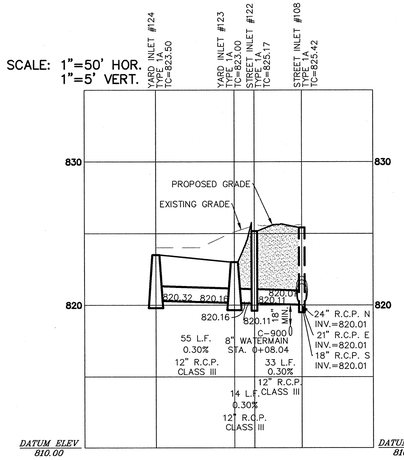

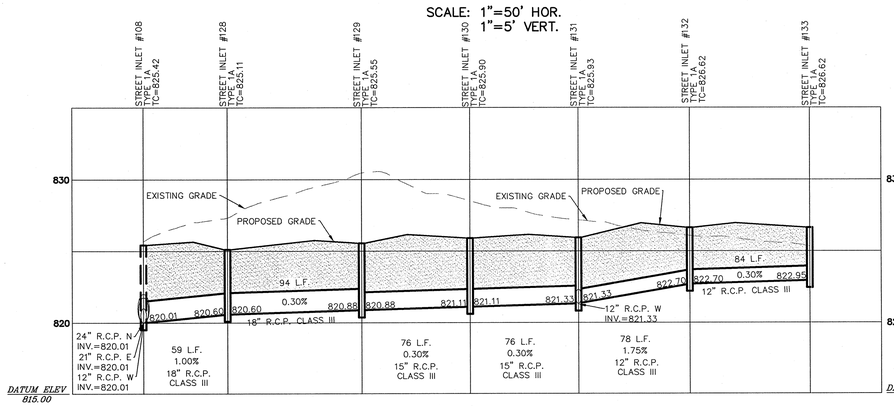

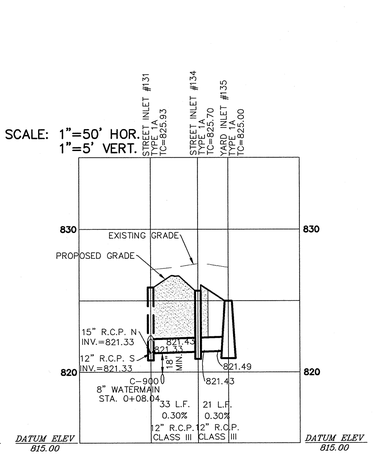

NO.	DATE	REVISIONS	BY
1	5/17/11	MOVED FORCE MAIN	KRG

JAMES O. RINEHART IV
REGISTERED
No. 10200495
STATE OF INDIANA
PROFESSIONAL ENGINEER

THIS DRAWING IS NOT INTENDED TO BE RECORDED AND IS NOT TO BE USED AS AN ORIGINAL BOUNDARY SURVEY. A ROUTE SURVEY OR A SURVEYOR LOCATION REPORT.

CERTIFIED: 1/27/11

STOEPPELWERTH & ASSOCIATES, INC.
CONSULTING ENGINEERS & LAND SURVEYORS
7965 East 106th Street, Fishers, IN 46038-2505
Phone: (317) 849-5935 Fax: (317) 849-5942
Toll Free: (800) 728-6917

STORM SEWER PLAN & PROFILES

STORAMERICA

HAMILTON COUNTY, INDIANA

WESTFIELD

DRAWN BY: KRG | CHECKED BY: BKR

SHEET NO.
C601

S & A JOB NO.
59815RAD

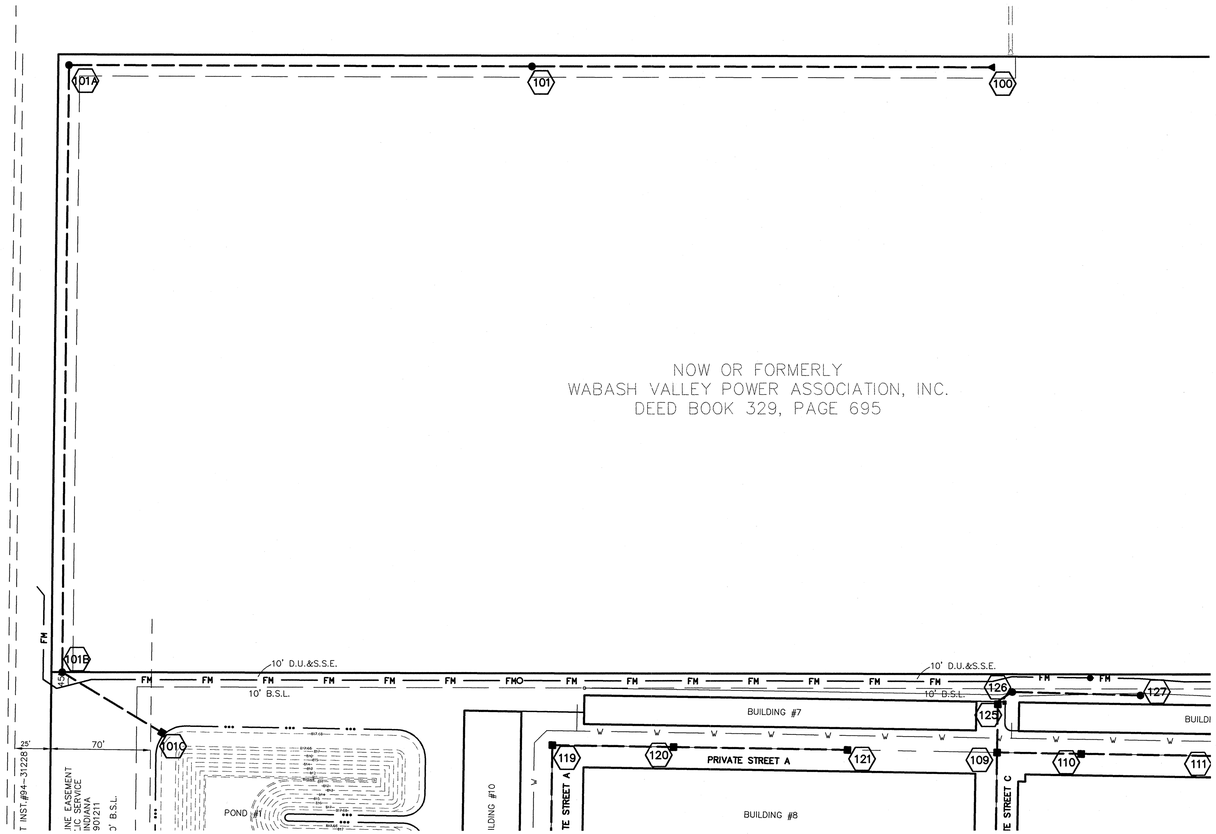

GRAPHIC SCALE

50 0 25 50

(IN FEET)
1 inch = 50 ft.

NOTES:

ALL STORM STRUCTURES TO RECEIVE SOLID LID CASTINGS ARE TO BE CONSTRUCTED TO PROVIDE ONE 4" RISER RING NO MORE, NO LESS TO ACHIEVE PLAN RIM GRADE.

ALL YARD INLETS ARE TO BE CONSTRUCTED AT A TOLERANCE OF +0.00' TO -0.20' OF PLAN GRADE.

ALL STORM SEWER CASTINGS SHALL BE LABELED "DUMP NO WASTE-DRAINS TO WATERWAY"

ALL STORM CROSSINGS IN RIGHT OF WAY WITH LESS THAN 30" COVER TO FINISH PAVEMENT GRADE WILL BE BACKFILLED WITH #8 STONE

ALL SSD'S (SUBSURFACE DRAINS) WILL NEED TO BE DOUBLE WALL SMOOTH BORE PERFORATED (HDPE) PIPE.

DEBRIS GUARDS ARE TO BE INSTALLED ON ALL OPEN ENDED OUTLETS.

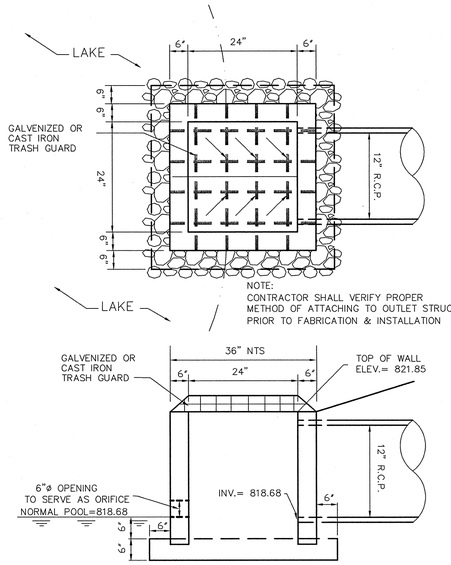

OUTLET CONTROL STRUCTURE 101C DETAIL
NOT TO SCALE

DENOTES FULL DEPTH GRANULAR BACKFILL

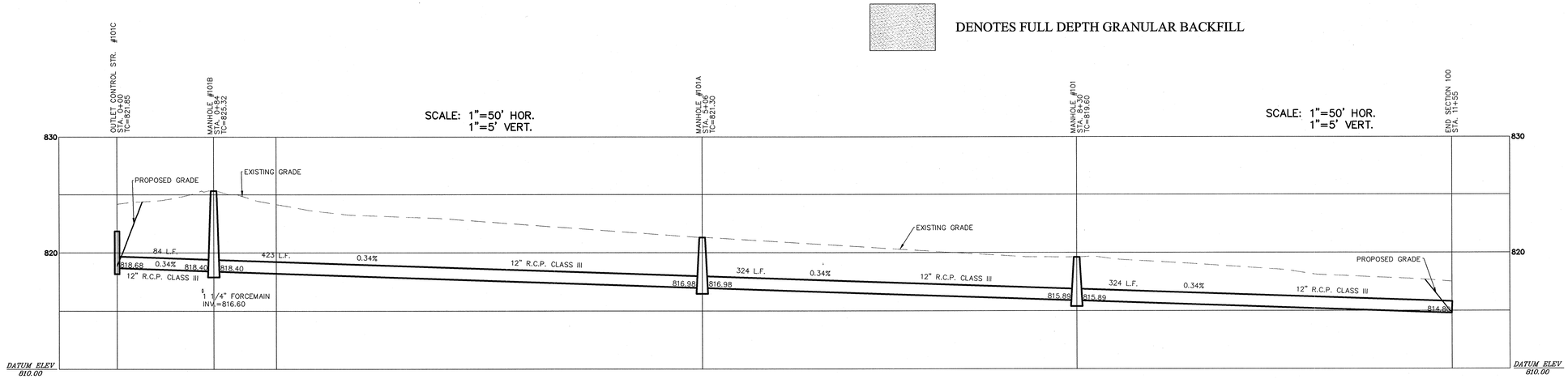

BY	REVISIONS	DATE	MARK
KRG	MOVED FORCE MAIN	5/17/11	

JAMES D. RINEHART
REGISTERED
No. 10200495
STATE OF INDIANA
PROFESSIONAL ENGINEER

THIS DRAWING IS NOT INTENDED TO BE RELIED UPON AS A REPRESENTATION OF ORIGINAL BOUNDARY SURVEY. A ROUTE SURVEY OR A SURVEYOR LOCATION REPORT.

CERTIFIED: 1/27/11

STOEPPELWERTH & ASSOCIATES, INC.
CONSULTING ENGINEERS & LAND SURVEYORS
7965 East 106th Street, Fishers, IN 46038-2505
Phone: (317) 849-5935 Fax: (317) 849-5942
Toll Free: (800) 728-6917

STORM SEWER PLAN & PROFILES

STORAMERICA

HAMILTON COUNTY, INDIANA

WESTFIELD

DRAWN BY:	CHECKED BY:
KRG	BKR

SHEET NO.
C602

S & A JOB NO.
59815RAD

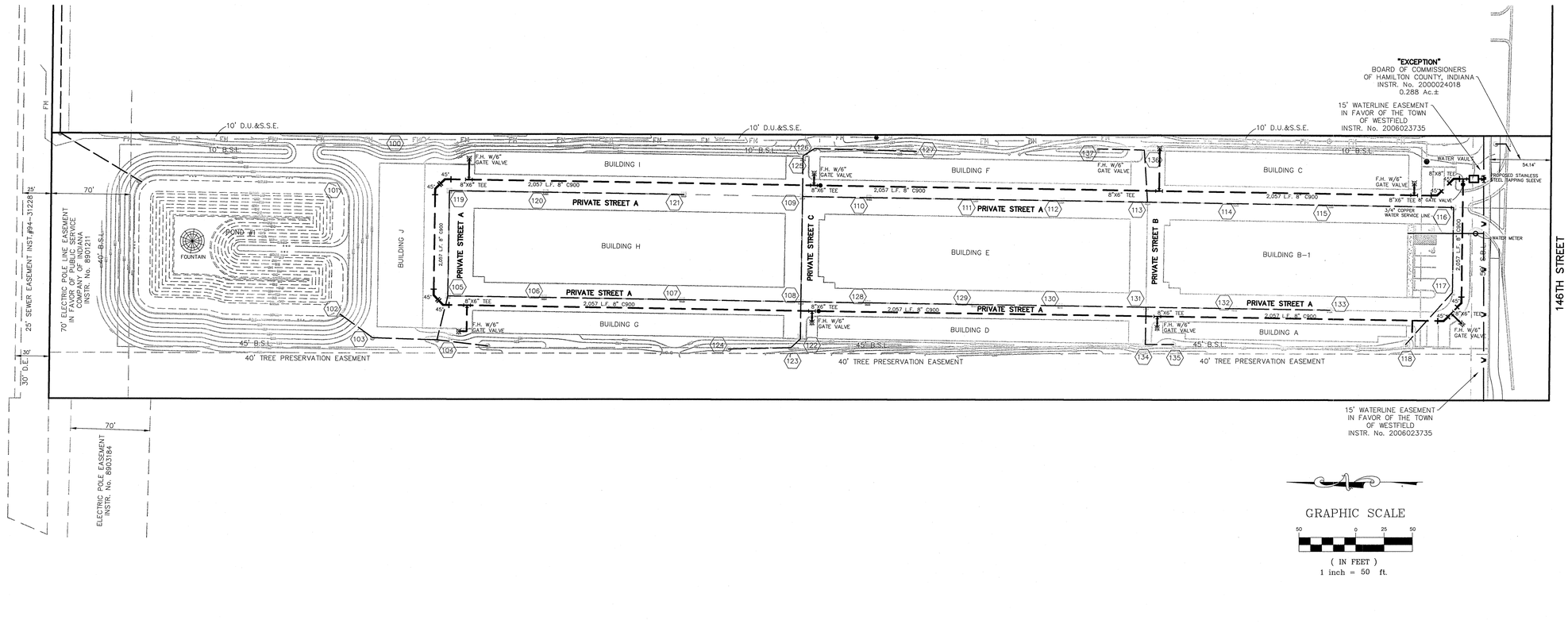

GRAPHIC SCALE

50 0 25 50

(IN FEET)
1 inch = 50 ft.

NOTE:
ALL WATERMAIN SHALL BE INSTALLED WITH A MIN. OF 8'-0" OF SEPERATION BETWEEN THE MAIN AND ALL STORM SEWER MANHOLES AND INLETS.

WATER MAIN CHART

Street Name	Pipe Size	Pipe Type	Total Pipe
PRIVATE STREET A	8"	C900	2,057'
		TOTAL	2,057'

NOTES:
1. C900 TO BE USED FOR ALL WATER MAIN INSTALLATIONS. 8" OR LESS.

2. ALL FIRE HYDRANTS SHALL HAVE A FIVE (5) INCH STORZ'S CONNECTION (MUELLER MODEL 290220 FOR CASTING AND 290221 CAP OR COMPARABLE TOO AND APPROVED BY WPWD). FIRE HYDRANTS SHALL BE PLACED PER THE DIRECTION OF WESTFIELD FIRE DEPARTMENT. ALL FIRE HYDRANTS SHALL BE PAINTED WITH 2 -COATS OF MAB "FIRE CAUTION YELLOW (7077)".

3. ALL VALVES TO BE POSI CAP INSTALLED.

4. C900 PIPE SHALL BE SADDLE TAPPED, AND BEDDED WITH SAND 6" UNDER PIPE AND 12" OVER THE PIPE.

5. ALL SERVICE LINES TO BE STUBBED 2 FT. BEHIND SIDEWALKS

6. BLUE REFLECTORS SHALL BE INSTALLED IN PAVEMENT TO MARK FIRE HYDRANTS (PRIVATE OR PUBLIC) PER THE CITY OF WESTFIELD'S UTILITY AND INFRASTRUCTURE CONSTRUCTION STANDARDS.

7. #12 GAUGE WIRE SHALL BE TAPED TO THE TOP OF THE MAIN AND PULLED THROUGH ALL VALVE BOXES.

8.ALL FIRE HYDRANTS MUST BE DELIVERED ON THE SITE FROM MANUFACTURER IN THE CORRECT COLOR.

9.ALL PROPOSED ROAD CROSSINGS MUST BE FULLY BACKFILLED WITH GRANULAR MATERIAL.

LEGEND

- EXISTING WATER MAIN
- PROPOSED WATER MAIN
- EXISTING HYDRANT
- PROPOSED HYDRANT
- BUTTERFLY VALVE
- VALVE
- PLUG
- REDUCER
- T.J. TEE
- M.J. SLEEVE
- BEND
- KICKER BLOCK
- CASING PIPE
- G — GAS LINES
- T — TELEPHONE LINES
- E — ELECTRIC LINES

"HOLEY MOLEY" SAYS:

1-800-382-5544
CALL TOLL FREE

1-800-428-5200
FOR CALLS OUTSIDE OF INDIANA

CAUTION

LOCATION OF ALL EXISTING UNDERGROUND UTILITIES SHOWN ON THIS PLAN ARE BASED UPON ABOVE GROUND EVIDENCE. (including, but not limited to, manholes, inlets, valves, & marks made upon the ground by others.) AND ARE SPECULATIVE IN NATURE. THERE MAY ALSO BE OTHER EXISTING UNDERGROUND UTILITIES FOR WHICH THERE IS NO ABOVE GROUND EVIDENCE OR FOR WHICH NO ABOVE GROUND EVIDENCE WAS OBSERVED. THE EXACT LOCATIONS OF SAID EXISTING UNDERGROUND UTILITIES SHOULD BE VERIFIED BY THE CONTRACTOR PRIOR TO ANY AND ALL CONSTRUCTION.

DATE	MARK	REVISIONS	BY
3/17/11		CHANGED SERVICE LINE TO COPPER	KRG
3/3/11		REV. MAIN, ADDED VAULT AND VALVES	KRG

THIS DRAWING IS NOT INTENDED TO BE REPRESENTATIVE AS A RESULT OF AN ORIGINAL BOUNDARY SURVEY, A ROUTE SURVEY OR A SURVEYOR LOCATION REPORT.

CERTIFIED: 1/27/11

JAMES C. RINEHART IV
REGISTERED
No. 10200495
STATE OF INDIANA
PROFESSIONAL ENGINEER

STOEPPELWERTH & ASSOCIATES, INC.
CONSULTING ENGINEERS & LAND SURVEYORS
7965 East 106th Street, Fishers, IN 46038-2505
Phone: (317) 849-5935 Fax: (317) 849-5942
Toll Free: (800) 728-6917

WATER PLAN
STORAMERICA
HAMILTON COUNTY, INDIANA
WESTFIELD

DRAWN BY: KRG | CHECKED BY: BKR

SHEET NO. C700

S & A JOB NO. 59815RAD

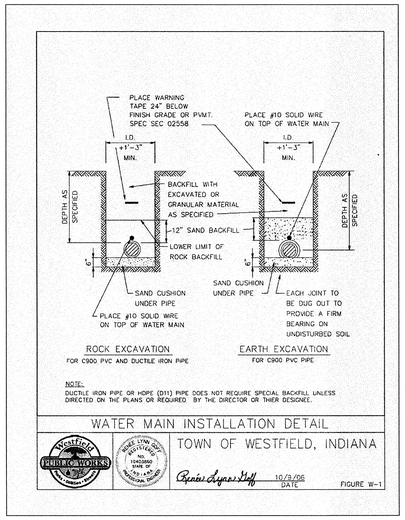

WATER MAIN INSTALLATION DETAIL

TOWN OF WESTFIELD, INDIANA

10/9/06 DATE

FIGURE W-1

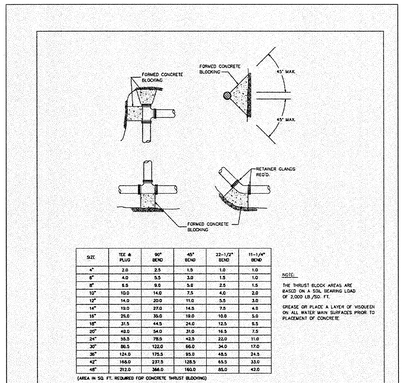

SIZE	TEE & PLUG	90° BEND	45° BEND	22-1/2° BEND	11-1/4° BEND
4"	2.0	2.5	1.5	1.0	1.0
6"	4.0	5.5	3.0	1.5	1.0
8"	6.5	9.0	5.0	2.5	1.5
10"	10.0	14.0	7.5	4.0	2.0
12"	14.0	20.0	11.0	5.5	3.0
14"	19.0	27.0	14.5	7.5	4.0
16"	25.0	36.0	18.0	10.0	5.0
18"	31.5	44.5	24.0	12.5	6.5
20"	40.0	54.0	31.0	16.5	7.5
24"	55.5	78.0	43.5	23.0	11.0
30"	86.5	122.0	66.0	34.0	17.0
36"	124.0	175.5	95.0	48.5	24.5
42"	166.0	237.5	128.5	66.5	33.0
48"	212.0	306.0	166.0	85.0	42.0

(AREA in SQ. FT. REQUIRED FOR CONCRETE THRUST BLOCKING)

NOTE:
THE THRUST BLOCK AREAS ARE BASED ON A 150 PSI WORKING LOAD OF 2,000 LB./SQ. FT.

GREASE OR PLACE A LAYER OF VISQUEEN ON ALL WATER MAIN SURFACES PRIOR TO PLACEMENT OF CONCRETE

THRUST BLOCK DETAIL

TOWN OF WESTFIELD, INDIANA

10/9/06 DATE

FIGURE W-2

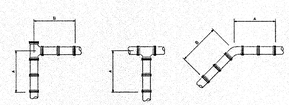

NOTE:
THE LENGTHS OF PIPE WITH RESTRAINED JOINTS TO BE SIZED ON A COMPACTED SILTY SOIL SURROUNDING THE PIPE

SIZE	A		B		
	TEE & PLUG	90° BEND	45° BEND	22-1/2° BEND	11-1/4° BEND
4"	12'-0"	17'-0"	10'-0"	5'-0"	3'-0"
6"	16'-0"	22'-0"	13'-0"	6'-0"	4'-0"
8"	19'-0"	27'-0"	16'-0"	8'-0"	5'-0"
10"	23'-0"	32'-0"	19'-0"	10'-0"	6'-0"
12"	25'-0"	36'-0"	21'-0"	12'-0"	7'-0"
14"	29'-0"	41'-0"	24'-0"	14'-0"	8'-0"
16"	32'-0"	45'-0"	28'-0"	15'-0"	8'-0"
20"	39'-0"	54'-0"	29'-0"	16'-0"	9'-0"
24"	47'-0"	58'-0"	34'-0"	19'-0"	10'-0"
30"	50'-0"	74'-0"	40'-0"	22'-0"	12'-0"
36"	56'-0"	82'-0"	45'-0"	25'-0"	14'-0"
42"	68'-0"	93'-0"	52'-0"	29'-0"	15'-0"

(LENGTH IN FEET REQUIRED FOR RESTRAINING JOINTS)

RESTRAINED JOINT DETAILS

TOWN OF WESTFIELD, INDIANA

10/9/06 DATE

FIGURE W-3

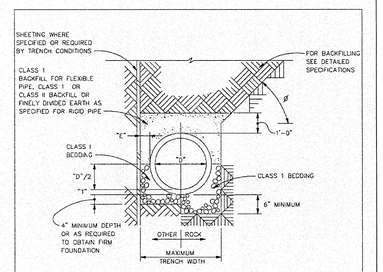

CLASS I BEDDING
TYPICAL SECTIONS IN FIRM FOUNDATIONS

NOTES:

1. SLOPE ANGLE, "ϕ", SHALL BE LESS THAN THE FRICTION ANGLE OF THE EXCAVATED MATERIAL.
2. "D"= NOMINAL PIPE SIZE.
3. "T"= PIPE WALL THICKNESS.

PVC BEDDING DETAIL

TOWN OF WESTFIELD, INDIANA

10/9/06 DATE

FIGURE W-14

NOTE: ALL HYDRANTS SHALL BE PAINTED WITH 2 COATS OF M.A.B. "FIRE PROTECTION RED (7068)" AFTER INSTALLATION

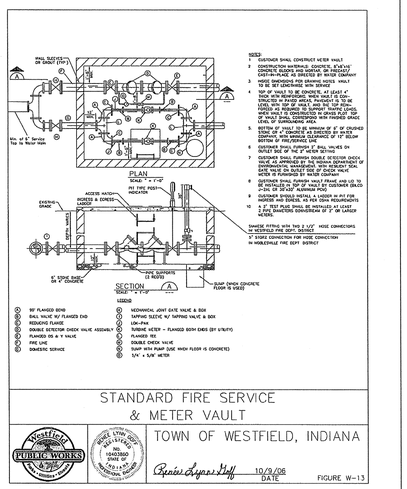

STANDARD FIRE SERVICE & METER VAULT

TOWN OF WESTFIELD, INDIANA

10/9/06 DATE

FIGURE W-13

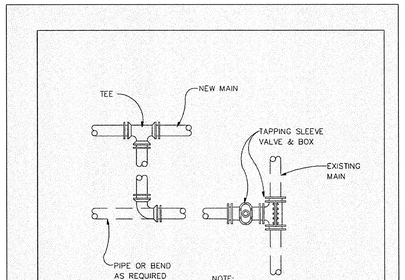

NOTE:

1. BENDS & FITTINGS AS REQUIRED SEE PLAN SHEETS FOR DETAILS
2. SEE FIGURES W-2 & W-3 FOR THRUST BLOCK AND RESTRAINED JOINT DETAILS.

CONNECTION TO EXISTING MAIN

TOWN OF WESTFIELD, INDIANA

10/9/06 DATE

FIGURE W-5

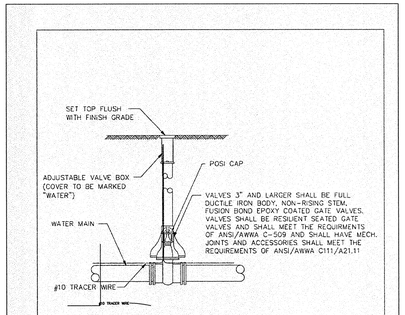

GATE VALVE AND BOX

TOWN OF WESTFIELD, INDIANA

10/9/06 DATE

FIGURE W-6

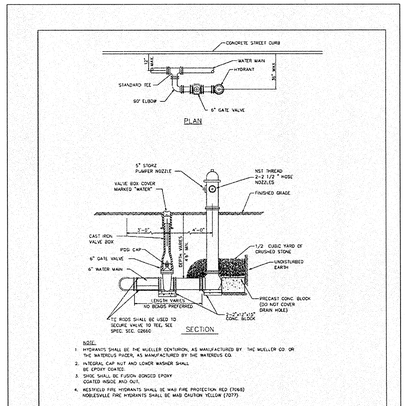

NOTE:

1. HYDRANTS SHALL BE THE MUELLER CENTURION, AS MANUFACTURED BY THE MUELLER CO. OR THE WATEROUS PACER, AS MANUFACTURED BY THE WATEROUS CO.
2. INTERNAL CAP NUT AND LOWER BARREL SHALL BE PAINTED RED.
3. SHOE SHALL BE FUSION BONDED EPOXY COATED INSIDE AND OUT.
4. WESTFIELD FIRE HYDRANTS SHALL BE MAB FIRE PROTECTION RED (7068) NOBLESVILLE FIRE HYDRANTS SHALL BE MAB CAUTION YELLOW (7077)

FIRE HYDRANT DETAILS

TOWN OF WESTFIELD, INDIANA

10/9/06 DATE

FIGURE W-7

BY	DESCRIPTION	DATE	MARK
KRG	ADDED VAULT DETAIL	3/3/11	
	REVISIONS		

STOEPPELWERTH & ASSOCIATES, INC.
CONSULTING ENGINEERS & LAND SURVEYORS
7965 East 106th Street, Fishers, IN 46038-2505
Phone: (317) 849-5935 Fax: (317) 849-5942
Toll Free: (800) 728-6917

JAMES O. RINEHART IV
REGISTERED
No. 10200495
STATE OF INDIANA
PROFESSIONAL ENGINEER

THIS DRAWING IS NOT INTENDED TO BE REPRESENTED AS A RETRACEMENT OR ORIGINAL SURVEY. REFER TO ROUTE SURVEY FOR SURVEYOR LOCATION REPORT.

CERTIFIED: 1/5/11

WATER DETAILS

STORAMERICA

HAMILTON COUNTY, INDIANA

WESTFIELD

DRAWN BY: KRG | CHECKED BY: BKR

SHEET NO. C701

S & A JOB NO. 59815RAD

E:\SWK\SRVC\Proj\C701-Water Details-Proj Layout1, 3/3/2011 2:01:33 PM, William, 1:1

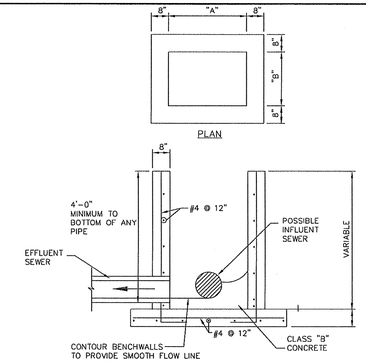

CAST	"A"	"B"
TYPE 1	36"(0.91m)	24"(0.61m)
TYPE 2	24"(0.61m)	22"(0.56m)
TYPE 3	22"(0.56m)	20"(0.51m)

NOTE:
1. THESE DIMENSIONS ARE ALSO APPLICABLE TO TYPE "CA" CATCH BASINS. (See figure ST-13)
2. PRECAST INLETS AND CATCH BASINS SHALL BE CONSIDERED AN ACCEPTABLE ALTERNATE IF APPROVED BY THE WESTFIELD PUBLIC WORKS DEPARTMENT

INLET STRUCTURE TYPE 1A

TOWN OF WESTFIELD, INDIANA

Renée Lynn Goff 4/10/06 DATE

FIGURE ST-11

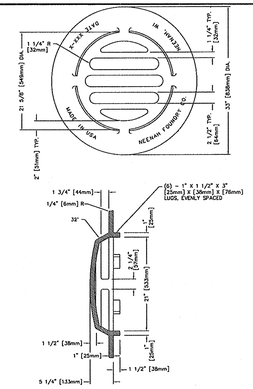

NEENAH	R-4342
EAST JORDAN	6489

* OR APROVED BY WESTFIELD PUBLIC WORKS DEPARTMENT

** STORM SEWER CASTINGS MANHOLE COVERS, BEEHIVE INLETS, CURB INLETS OR OTHER APPROVED CASTING SHALL HAVE THE FOLLOWING PHRASES CAST IN RECESSED LETTERS TWO (2) INCHES IN HEIGHT:
- A. "STORM SEWER"
- B. "DRAINS TO RIVER" OR "DRAINS TO WATERWAY"
- C. "DUMP NO WASTE"
- D. OTHER PHRASES SHALL REQUIRE APPROVAL OF THE WESTFIELD PUBLIC WORKS DEPARTMENT.

BEEHIVE CURB INLET CASTING

TOWN OF WESTFIELD, INDIANA

Renée Lynn Goff 4/10/06 DATE

FIGURE ST-10

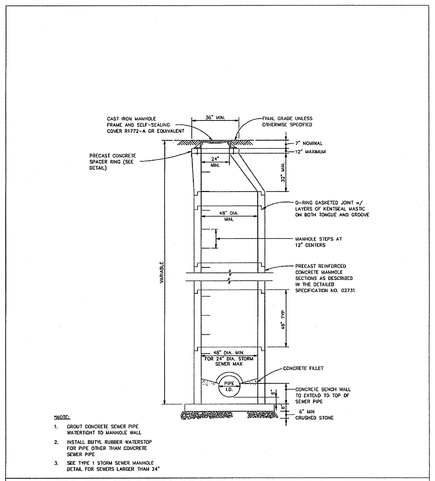

NOTE:
1. GROUT CONCRETE SEWER PIPE WATERTIGHT TO MANHOLE WALL.
2. INSTALL BUTYL RUBBER WATERSTOP AT JOINTS BETWEEN TWO CONCRETE SEWER PIPES.
3. SEE TYPE 1 STORM SEWER MANHOLE DETAIL FOR SEWERS LARGER THAN 24"

STANDARD STORM MANHOLE DETAIL

TOWN OF WESTFIELD, INDIANA

Renée Lynn Goff 4/10/06 DATE

FIGURE ST-1

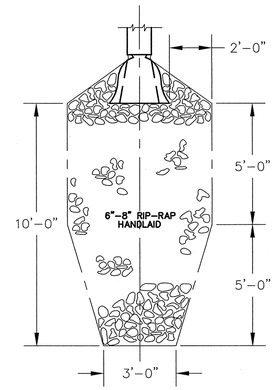

RIP-RAP DETAIL
NOT-TO-SCALE

NOTE:

ALL STORM TOP OF CASTINGS STATING "DUMP NO WASTE-DRAINS TO WATERWAY" OR "DUMP NO WASTE-DRAINS TO FRESH WATER"

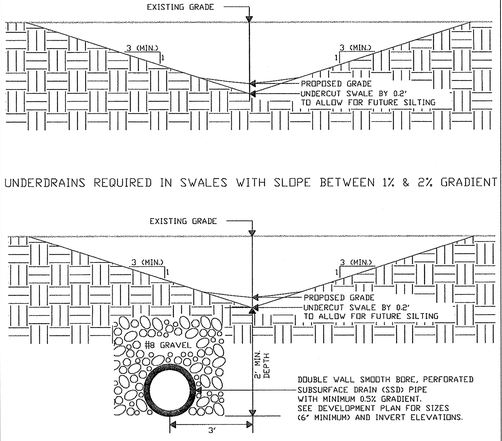

UNDERDRAINS REQUIRED IN SWALES WITH SLOPE BETWEEN 1% & 2% GRADIENT

MINIMUM CHANNEL SLOPE 1% GRADIENT

(DRAWING NOT TO SCALE)

TYPICAL SWALE DETAIL

TOWN OF WESTFIELD, INDIANA

Renée Lynn Goff 4/10/06 DATE

FIGURE ST-43

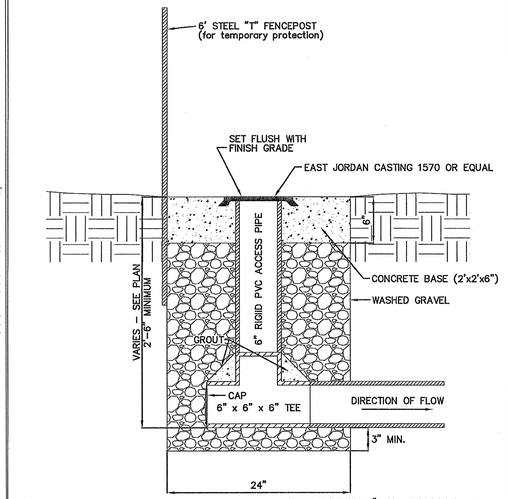

NOTE: MINIMUM 6" SUB SURFACE DRAIN D= PIPE DIAMETER

NOTE: TILE SHALL BE DOUBLE WALL SMOOTH WALL PERFORATED HDPE PIPE.

SUBSURFACE DRAIN (SSD) RISER DETAIL

TOWN OF WESTFIELD, INDIANA

Renée Lynn Goff 4/10/06 DATE

FIGURE ST-37

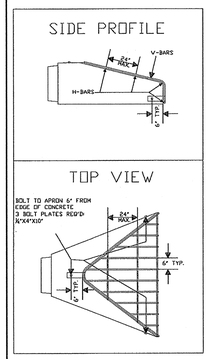

Apron Size Inches	V-bar Size Inches	No. of H-bars Req'd	H-bar Size Inches	Bolt Dia. Inches	"A" Dim. Inches
Arch pipe aprons 18	1/2	3	5/8	1/2	5
24	5/8	4	3/4	1/2	7
30	5/8	4	3/4	1/2	7 1/2
36	3/4	4	1	1/2	10 1/2
42	3/4	4	1	3/4	11
48	3/4	4	1 ½ pipe	3/4	12
54	3/4	4	1 ½ pipe	3/4	12
60	3/4	5	1 ½ pipe	3/4	14
72	3/4	5	1 ½ pipe	3/4	14
84	3/4	6	1 ½ pipe	3/4	15
Round pipe aprons 12	1/2	3	5/8	1/2	4
15	1/2	3	5/8	1/2	4 1/2
18	1/2	4	5/8	1/2	4 1/2
21	1/2	4	5/8	1/2	5
24	5/8	4	3/4	1/2	5
27	5/8	4	3/4	1/2	5 1/2
30	5/8	4	3/4	1/2	5 1/2
36	3/4	4	1	3/4	8
42	3/4	4	1	3/4	8
48	3/4	5	1	3/4	8
54	3/4	5	1 ½ pipe	3/4	8
60	3/4	5	1 ½ pipe	3/4	8
66	3/4	6	1 ½ pipe	3/4	8
72	3/4	6	1 ½ pipe	3/4	9
84	3/4	7	1 ½ pipe	3/4	10
90	3/4	7	1 ½ pipe	3/4	14

NOTES:
1. BARS & PLATES ARE HOT-ROLLED STEEL.
2. BARS, PLATES, & PIPIE ARE FINISHED WITH 2 COATS OF ALUMINUM PAINT.
3. BOLTS ARE GALVINIZED
4. NO REBAR THROUGH PIPES WILL BE ALLOWED
5. DEBRIS GUARD SHALL BE REMOVABLE

(DRAWING NOT TO SCALE)

DEBRIS GUARD

TOWN OF WESTFIELD, INDIANA

Renée Lynn Goff 4/10/06 DATE

FIGURE ST-29

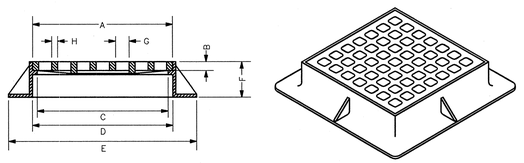

CATALOG NO.	A	B	C	D	E	F	G	H	WT. LBS.
R-3405	23 ½ X 23 ½	1 ½	22 X 22	24 ¾ X 24 ¾	32 ¾ X 32 ¾	6	2 ⅛ X 2 ⅛	1	345

OPEN PAVEMENT GRATE
NO SCALE

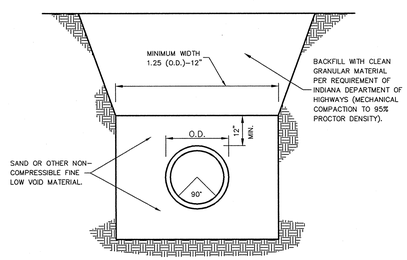

RIGID PIPE BEDDING DETAIL
(CONCRETE PIPE)
NOT-TO-SCALE

		3/3/11	KRG
		DATE	BY
	REVISED DETAILS	MARK	
	REVISIONS		

JAMES O. RINEHART IV
REGISTERED
No. 10200495
STATE OF INDIANA
PROFESSIONAL ENGINEER

THIS DRAWING IS NOT INTENDED TO BE REPRESENTED AS A RETRACEMENT OR ORIGINAL BOUNDARY SURVEY, A ROUTE SURVEY OR A SURVEYOR LOCATION REPORT.

CERTIFIED: 1/27/11

STOEPPELWERTH & ASSOCIATES, INC.
CONSULTING ENGINEERS & LAND SURVEYORS
7965 East 106th Street, Fishers, IN 46038-2505
Phone: (317) 849-5935 Fax: (317) 849-5942
Toll Free: (800) 728-6917

CONSTRUCTION DETIALS

STORAMERICA

HAMILTON COUNTY, INDIANA

WESTFIELD

DRAWN BY: KRG | CHECKED BY: BKR

SHEET NO. C800

S & A JOB NO. 59815RAD

S:\59815RAD\dwg\59804-STRMTR.dwg, Layout: 3/3/2011 2:03:32 PM, KStiern, 1:1

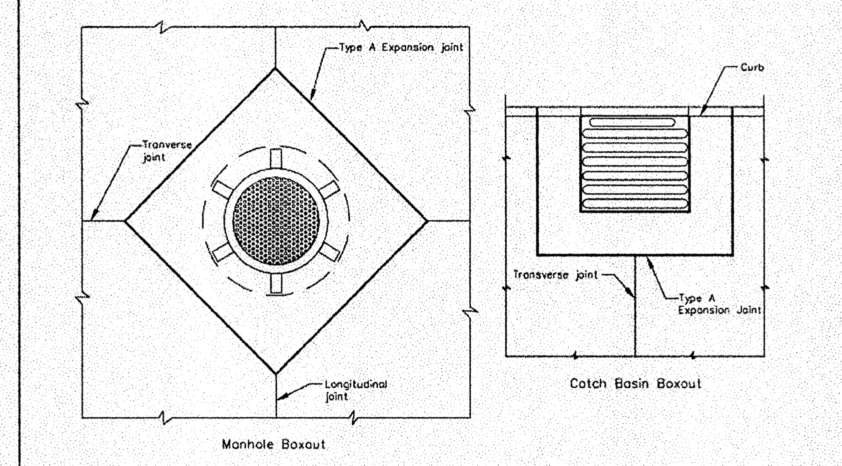

1. All catch basins shall be separated from the pavement and curb by boxing out around basin as shown above. Expansion joint material shall extend completely through curb and slab. Manhole castings within the pavement limits shall be boxed in like manner except when telescoping-type castings are used.

2. When a joint falls within 5 ft. of or contacts basins, manholes, or other structures, shorten one or more panels either side of opening to permit joint to fall on round structures and at or between corners of rectangular structures.

STRUCTURE DETAILS

TOWN OF WESTFIELD, INDIANA

RENEE LYNN GOFF REGISTERED No. 10403860 STATE OF INDIANA PROFESSIONAL ENGINEER

Renée Lynn Goff 10/9/06 DATE FIGURE P-6

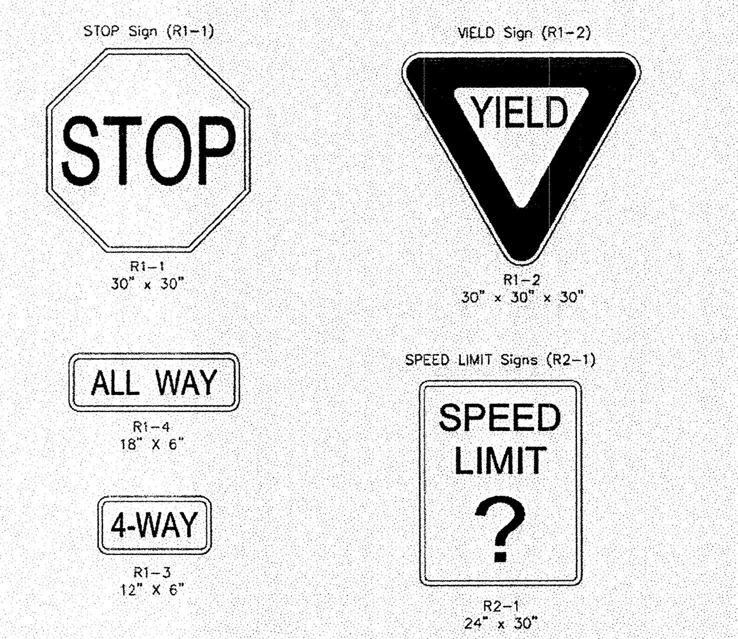

NOTES:

1. SIGNS SHALL BE SINGLE FACED WITH HIGH INTENSITY REFLECTORIZED SHEETING ON 0.080" THICK ALUMINUM SHEET MATERIAL PER INDOT STANDARD SPECIFICATION 912.10.
2. POSTS SHALL BE 11'-0" LONG, 3lb/ft GALVANIZED CHANNEL SIGN POST PER INDOT STANDARD SPECIFICATION 909.14.
3. ALL SIGN SIZES, SHAPES, COLORS AND MATERIAL SHALL MEET THE INDIANA MANUAL ON UNIFORM TRAFFIC CONTROL DEVICES.

TYPICAL SUBDIVISION REGULATORY SIGNS

TOWN OF WESTFIELD, INDIANA

Renée Lynn Goff 10/9/06 DATE FIGURE P-15.1

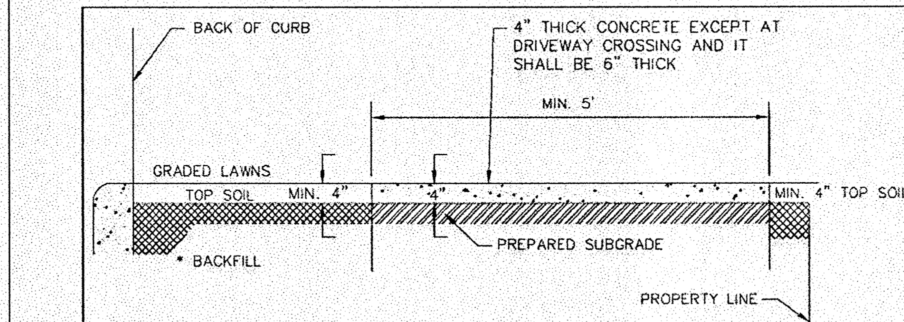

TYPICAL SIDEWALK SECTION
NOT TO SCALE

* THE SPACE BEHIND THE CURB SHALL BE FILLED WITH SUITABLE MATERIAL TO THE REQUIRED ELEVATION AND COMPACTED IN LAYERS NOT TO EXCEED 6" IN DEPTH.

SUBGRADE UNDER ALL CURBS, SIDEWALKS, AND DRIVES SHALL BE COMPACTED IN ACCORDANCE WITH I.N.D.O.T. SPECIFICATIONS.

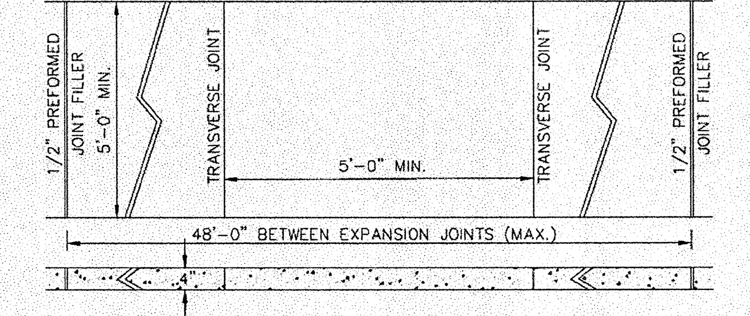

CONCRETE SIDEWALK
NOT TO SCALE

SIDEWALK DETAILS

TOWN OF WESTFIELD, INDIANA

Renée Lynn Goff 10/9/06 DATE FIGURE P-10

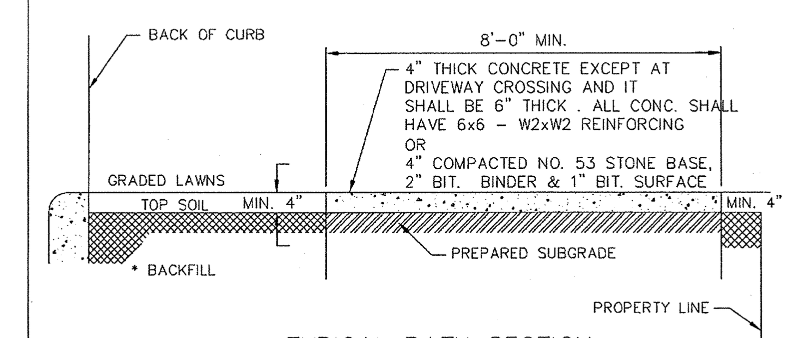

TYPICAL PATH SECTION
NOT TO SCALE

* THE SPACE BEHIND THE CURB SHALL BE FILLED WITH SUITABLE MATERIAL TO THE REQUIRED ELEVATION AND COMPACTED IN LAYERS NOT TO EXCEED 6" IN DEPTH.

SUBGRADE UNDER ALL CURBS, SIDEWALKS, PATHS AND DRIVES SHALL BE COMPACTED IN ACCORDANCE WITH I.N.D.O.T. SPECIFICATIONS.

SEE SECTION 02502 (STANDARDS FOR ROADWAY CONSTRUCTION) FOR DETAILED DISCRIPTION OF BICYCLE/JOGGING PATH CONSTRUCTION

BICYCLE/JOGGING PATH DETAIL

TOWN OF WESTFIELD, INDIANA

Renée Lynn Goff 10/9/06 DATE FIGURE P-16

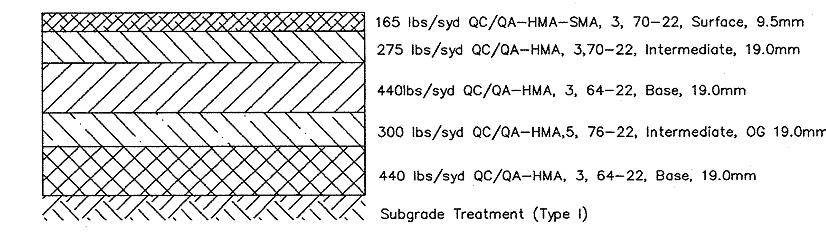

PAVEMENT WITHIN RIGHT-OF-WAY 146TH STREET
NOT-TO-SCALE

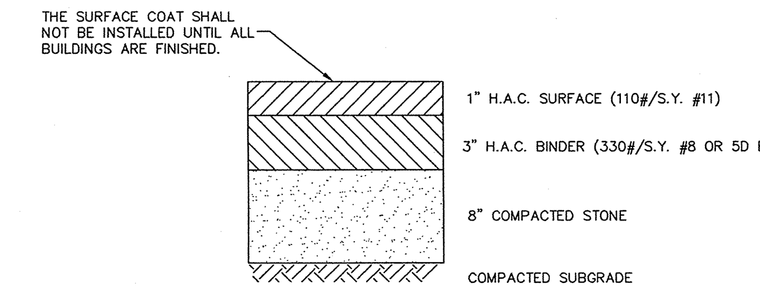

HEAVY DUTY ASPHALT
NOT-TO-SCALE

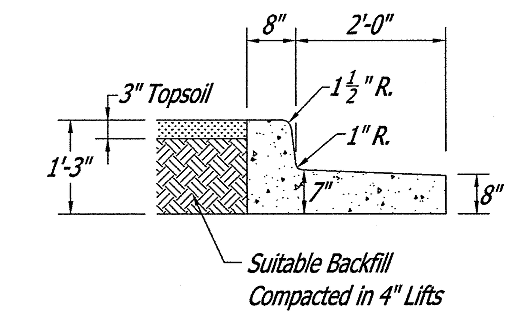

8" COMBINED CONCRETE CURB AND GUTTER, TYPE C - HAMILTON CO. ROW

Scale: N.T.S.

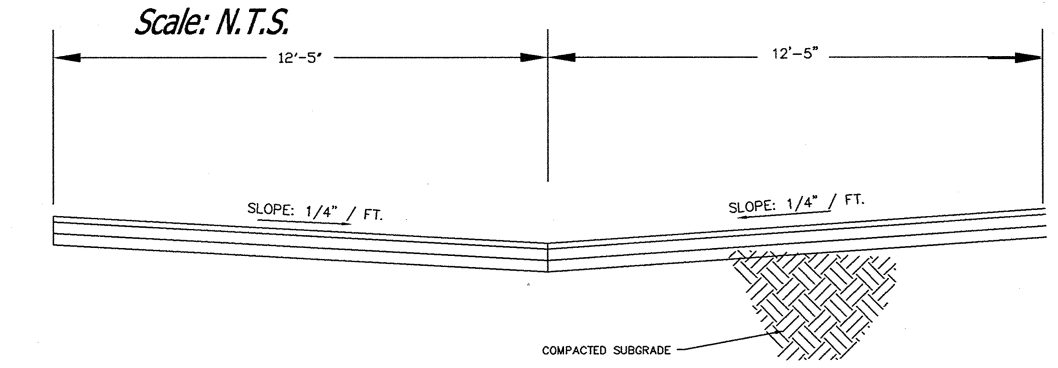

STREET CROSS-SECTION PRIVATE STREET A (WEST SIDE)
NOT-TO-SCALE

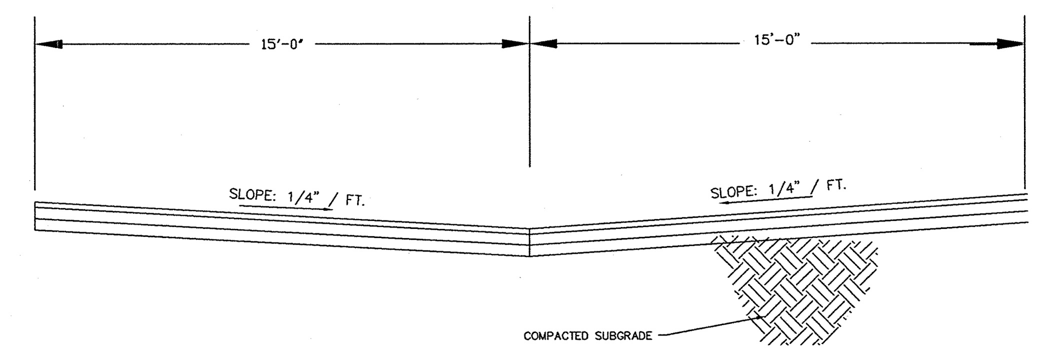

STREET CROSS-SECTION PRIVATE STREETS A, B, & C
NOT-TO-SCALE

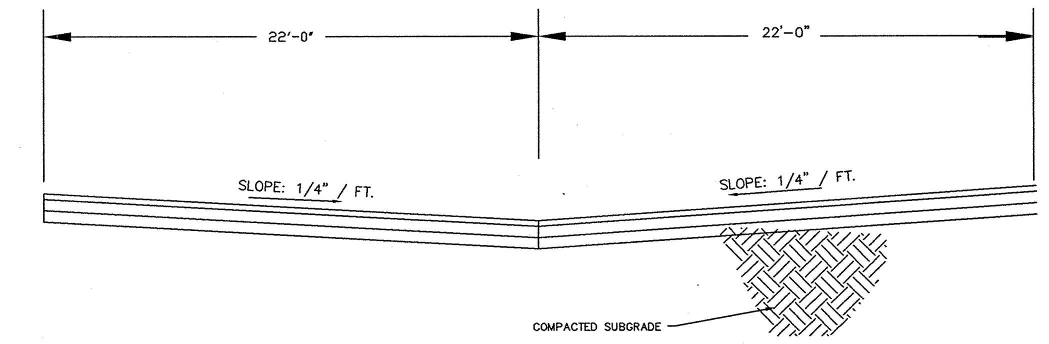

STREET CROSS-SECTION PRIVATE STREET A (NORTH SIDE)
NOT-TO-SCALE

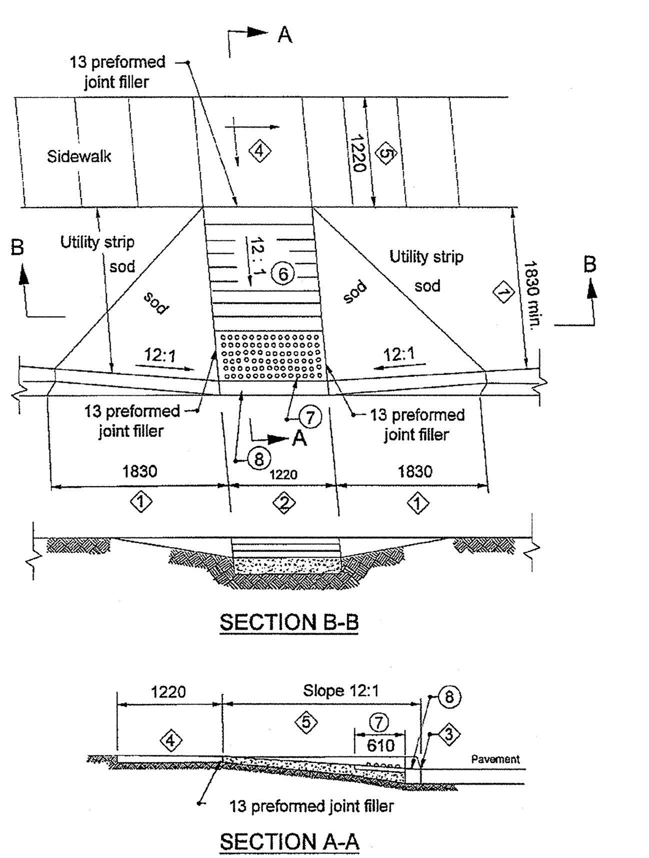

NOTES :

6. See Standard Drawing 604-SWCR-02 for groove details.
7. See Standard Drawing 604-SWCR-02 for details of the detectable warning surface.
8. See Standard Drawing 604-SWCR-02 for alternate curb construction.
9. See Standard Drawing 604-SWCR-02 for typical ramp construction detail.
10. See Standard Drawing 604-SWCR-01 and -02 for Location Plan and General Notes respectively.

All Dimension are in mm unless otherwise specified
INDIANA DEPARTMENT OF TRANSPORTATION
SIDEWALK CURB RAMPS TYPE C
SEPTEMBER 2005
STANDARD DRAWING NO. 604-SWCR-05
RICHARD L. VanCLEAVE REGISTERED No. 9750 STATE OF INDIANA PROFESSIONAL ENGINEER
/s/ Richard L.VanCleave 9-01-05 DESIGN STANDARDS ENGINEER DATE
/s/ Richard K.Smutzer 9-01-05 CHIEF HIGHWAY ENGINEER DATE

GENERAL NOTES :

1. These dimensions are based on a 6 in. curb height. They shall be proportionally adjusted for other curb heights.
2. Where site infeasibility precludes construction to the width shown, such width may be decreased to a minimum of 3'-0.
3. The bottom edge of the curb ramp shall be flush with the edge of adjacent pavement and gutter line.
4. Landing areas at the top of curb ramps shall have maximum cross slope of 50 : 1 in any direction. When site infeasibility precludes a landing slope of 50 : 1 in any direction, the slope perpendicular to the curb face shall not exceed 50 :1.
5. If site infeasibility precludes construction to the width shown, the landing width may be decreased to 3'-0 minimum. The running slope of the curb ramp may be steepened to a maximum of 10 : 1 for a maximum 6 in. rise.
6. Drainage inlets should be located uphill from curb ramps to prevent puddles at the path of travel.
7. See Standard Drawing E 604-SWCR-12 for improved access on narrow sidewalks.
8. Algebraic difference in grade between the base of curb ramp and the gutter shall be limited to less than 11%. If it is not practical, a 2'-0 wide level strip shall be provided. See detail sketch.
9. Minimum recommended width of curb ramp is 4'-0.

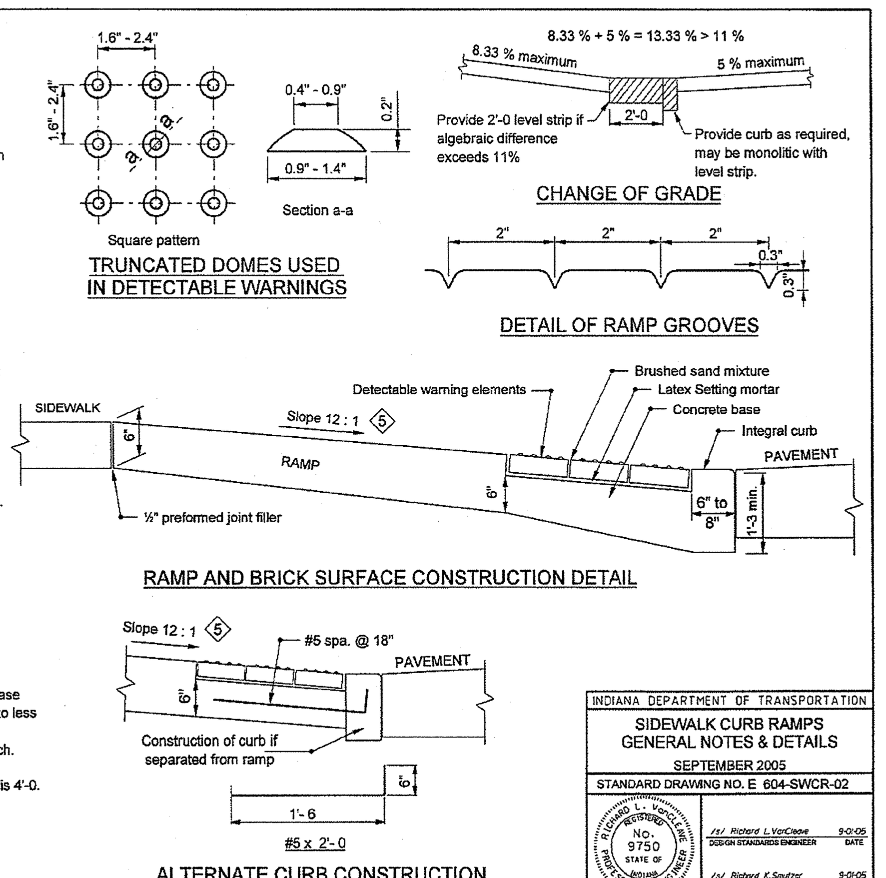

INDIANA DEPARTMENT OF TRANSPORTATION
SIDEWALK CURB RAMPS GENERAL NOTES & DETAILS
SEPTEMBER 2005
STANDARD DRAWING NO. E 604-SWCR-02
/s/ Richard L.VanCleave 9-01-05 DESIGN STANDARDS ENGINEER DATE
/s/ Richard K.Smutzer 9-01-05 CHIEF HIGHWAY ENGINEER DATE

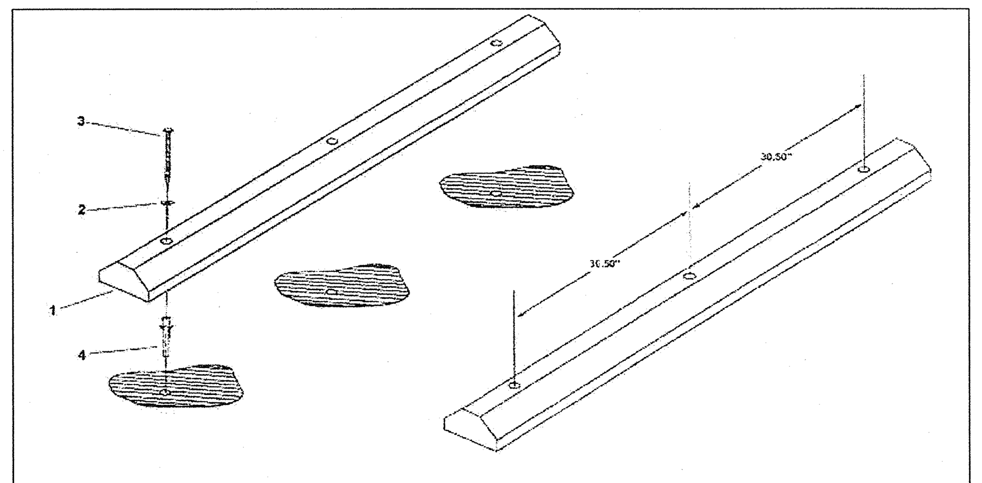

MOUNTING SURFACE:
MOUNTING SURFACES MAY VARY FROM SITE TO SITE. THE MOST RIGID METHODS WILL RESULT IN CAR STOP STABILITY UNDER NORMAL USAGE. IMPACT BY SNOWPLOWS IS NOT NORMAL.

IDEAL MOUNTING SURFACES:
- FLAT SURFACE THAT DOES NOT MOVE SUMMER OR WINTER.
- 4" CEMENT OR 4" ASPHALT ON A FIRM BASE.
- ASPHALT MUST BE MORE THAN ONE YEAR OLD.

OTHER MOUNTING SURFACES:
CAR STOPS BEING INSTALLED ON A NEARLY FLAT SURFACE WILL CONFORM TO GRADUAL SURFACE CONTOURS. THEY CAN ALSO BE BENT SLIGHTLY TO MATCH SOME GRADUAL GROUND IRREGULARITIES OR CAN BE SHAVED WITH WOOD PLANE TYPE OF TOOLS.

REF#	QTY	DESCRIPTION
1	1	CAR STOP
		HARDWARE KIT
2	3	9/16" FLAT WASHER
3	3	1/2" X 8" LAG BOLT
4	3	PLASTIC ANCHOR (MOLLIES)

Note: Car Stops should not be mounted in gravel or any surface where bolts go below driving surface material.

INSTALLATION INSTRUCTIONS USING HARDWARE PROVIDED:
USE THE PRE-DRILLED HOLES ON THE CAR STOP AS A GUIDE FOR DRILLING HOLES INTO ASPHALT OR CONCRETE.

ASPHALT INSTALLATION:
1. DRILL ½" HOLE, 7" DEEP, WITH MASONRY BIT.
2. INSERT PLASTIC ANCHORS FLUSH WITH ASPHALT.
3. PLACE CAR STOP OVER PLASTIC ANCHORS.
4. INSERT LAG BOLTS AND WASHERS AND SECURE.

CONCRETE INSTALLATION:
1. DRILL A 9/16" HOLE, 7" DEEP, WITH A MASONRY BIT.
2. INSERT PLASTIC ANCHORS FLUSH WITH CONCRETE.
3. PLACE CAR STOP OVER PLASTIC ANCHORS.
4. INSERT LAG BOLTS AND WASHERS AND SECURE.

MOUNTING BOLT VARIATIONS:
AREAS WITH 2" OF ASPHALT ON SAND, LOOSE DIRT, CLAY, ETC. SHOULD BE PREPARED WITH AT LEAST 4" DIAMETER X 10" DEPTH CAISSON-TYPE FOOTING OF CEMENT. WHEN SET UP THE CEMENT CAN BE DRILLED TO ACCOMMODATE ALL EXPANSION BOLT SYSTEMS. IN SOME CASES A LARGER FOOTING MAY BE NECESSARY TO ENCOMPASS SOLID SUPPORTING GROUND AREA. UNCRACKED CEMENT OF 4" AND GREATER SHOULD BE SUFFICIENT TO HOLD THE EXPANSION BOLT SYSTEM.

PARKING STOP DETAIL
NOT-TO-SCALE

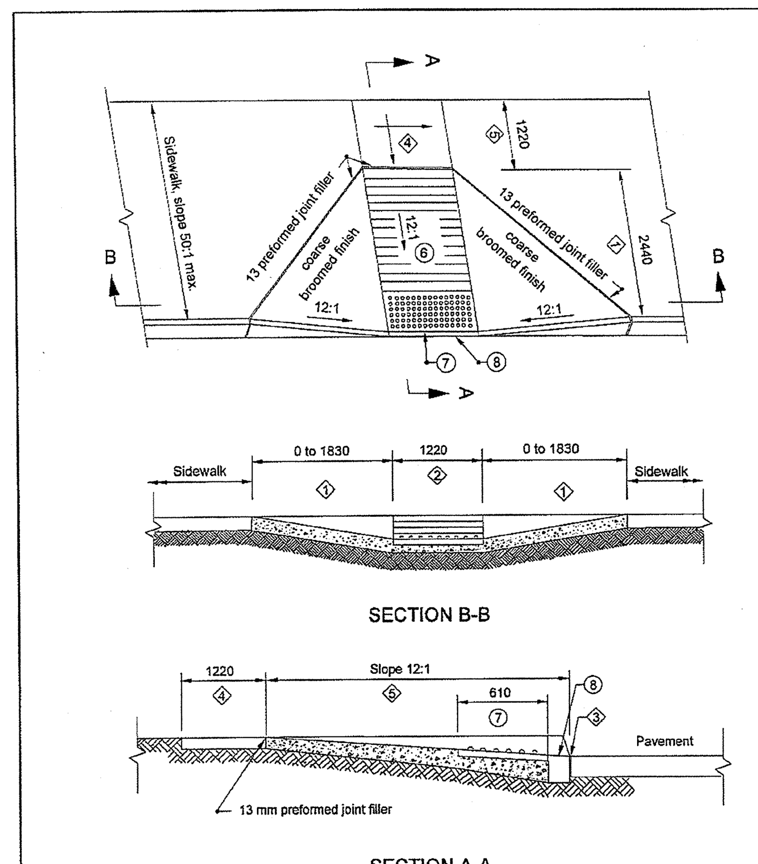

NOTES :

6. See Standard Drawing 604-SWCR-02 for groove details.
7. See Standard Drawing 604-SWCR-02 for details of the detectable warnings.
8. See Standard Drawing 604-SWCR-02 for alternate curb construction.
10. See Standard Drawing 604-SWCR-01 and -02 for Location Plan and General Notes respectively.
11. See Standard Drawing 604-SWCR-02 for typical ramp construction detail.

All Dimension are in mm unless otherwise specified
INDIANA DEPARTMENT OF TRANSPORTATION
SIDEWALK CURB RAMP TYPE A
SEPTEMBER 2005
STANDARD DRAWING NO. 604-SWCR-03
/s/ Richard L.VanCleave 9-01-05 DESIGN STANDARDS ENGINEER DATE
/s/ Richard K.Smutzer 9-01-05 CHIEF HIGHWAY ENGINEER DATE

NOTES :

6. See Standard Drawing 604-SWCR-02 for groove details.
7. See Standard Drawing 604-SWCR-02 for details of the detectable warnings.
8. See Standard Drawing 604-SWCR-03 for alternate curb construction.
9. See Standard Drawing 604-SWCR-03 for typical ramp construction detail.
10. See Standard Drawing 604-SWCR-01 and -02 for Location Plan and General Notes respectively.

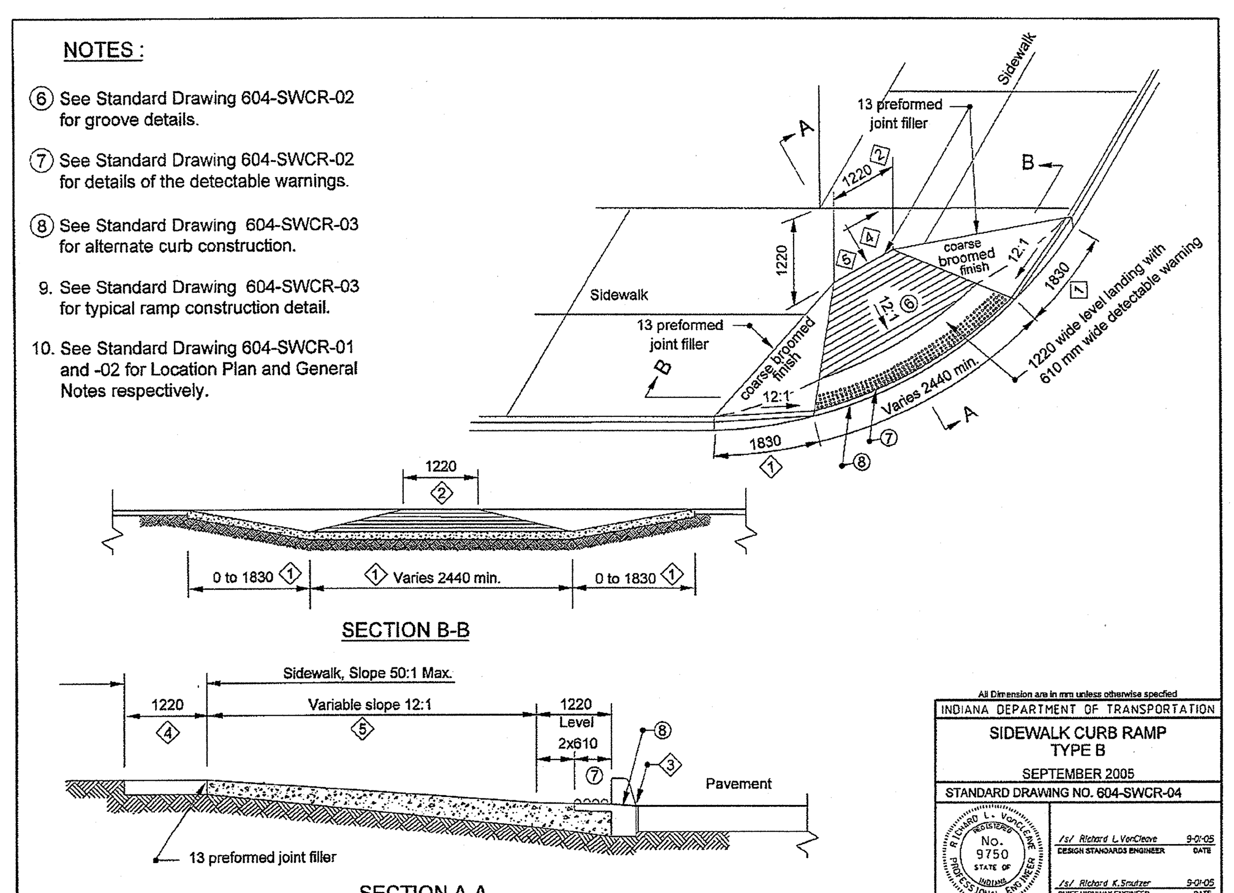

All Dimension are in mm unless otherwise specified
INDIANA DEPARTMENT OF TRANSPORTATION
SIDEWALK CURB RAMP TYPE B
SEPTEMBER 2005
STANDARD DRAWING NO. 604-SWCR-04
/s/ Richard L.VanCleave 9-01-05 DESIGN STANDARDS ENGINEER DATE
/s/ Richard K.Smutzer 9-01-05 CHIEF HIGHWAY ENGINEER DATE

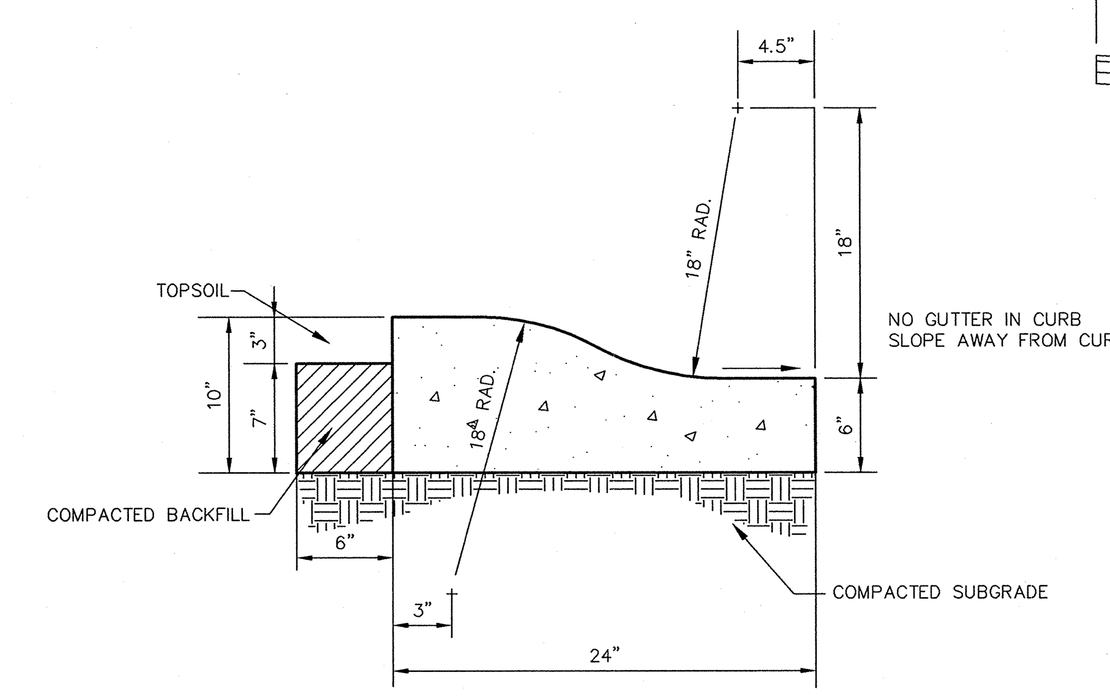

CONCRETE ROLL CURB NO GUTTER (TYPE I)
(D.O.T. STANDARD PLAN 12-01)
NOT-TO-SCALE

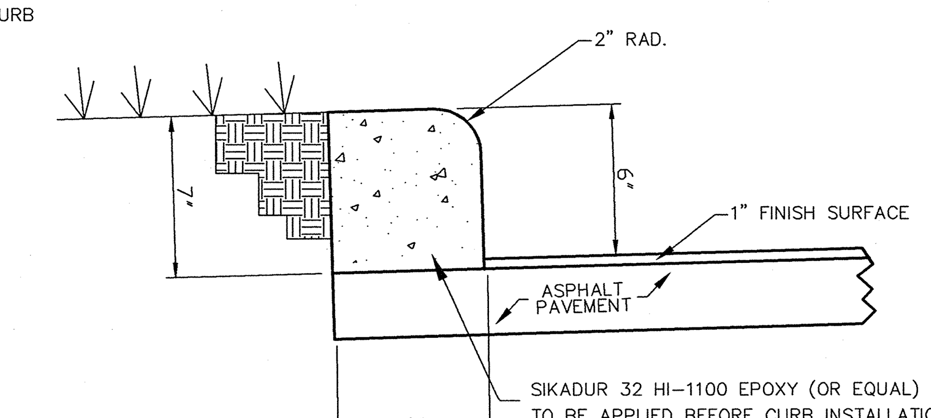

TOP SET CURB DETAIL
NOT-TO-SCALE

REVISIONS | DATE | MARK | BY

JAMES O. RINEHART IV REGISTERED No. 10200495 STATE OF INDIANA PROFESSIONAL ENGINEER

THIS DRAWING IS NOT INTENDED TO BE REPRESENTED AS A RETRACEMENT OR ORIGINAL BOUNDARY SURVEY, A ROUTE SURVEY OR A SURVEYOR LOCATION REPORT.

CERTIFIED: 1/27/11

STOEPPELWERTH & ASSOCIATES, INC.
CONSULTING ENGINEERS & LAND SURVEYORS
7965 East 106th Street, Fishers, IN 46038-2505
Phone: (317) 849-5935 Fax: (317) 849-5942
Toll Free: (800) 728-6917

CONSTRUCTION DETAILS
STORAMERICA

HAMILTON COUNTY, INDIANA

WESTFIELD

DRAWN BY: KRG | CHECKED BY: BKR

SHEET NO. C801

S & A JOB NO. 59815RAD

S:\59815RAD\dwg\C801-STRT-DTL.dwg, Layout1, 3/4/2011 1:16:48 PM, KGilson, 1:1

SECTION 01001 - GENERAL REQUIREMENTS

1.1 DEFINITIONS

A. Whenever used in these specifications the following terms have the meanings indicated which are applicable to both the singular and plural thereof:

1. Town - The Town of Westfield, represented by the Town Council.
2. Westfield Public Works Department – An agency of the Town which manages public infrastructure within its jurisdiction, (WPWD)
3. Developer - Person or firm having control of the development site, and management of the project.
4. Contractor - The person, firm or corporation with whom the developer has entered into an agreement for construction of the project.
5. Project - The total construction of which the work to be provided may be the whole or part.
6. Work - The entire completed construction or the various separately identified parts thereof required to be furnished.

1.2 WORK TO BE PERFORMED

Work to be performed shall be in accordance with drawings and specifications approved by the Town.

1.3 SAFETY AND HEALTH REGULATIONS FOR CONSTRUCTION

The Contractor shall be solely responsible for all obligations prescribed as employer obligations under Chapter XVII of Title 29, Code of Federal Regulations, Part 1926, otherwise known as "Safety and Health Regulations for Construction." All contractors performing work within the Town's jurisdiction must meet with WPWD's Safety Coordinator as part of the required preconstruction conference prior to beginning work.

1.4 DISCOVERY OF HAZARDOUS MATERIAL

If, during the course of installing Town infrastructure, the existence of hazardous material, including asbestos containing material, is observed in the work area, the Contractor shall immediately notify the Developer in writing. The Contractor shall not perform any work pertinent to the hazardous material prior to receipt of

special instructions from the Town of Westfield. Asbestos containing material includes transite pipe.

1.5 EASEMENTS

A. The Developer will obtain utility and/or drainage easements over and through certain private lands for construction. The width or limits of such easements will be defined by the Town, and all permanent and/or temporary easements shall be executed and conveyed to the Town before any construction can commence. If the methods of construction employed by the Contractor are such as to require the use of land beyond the limits obtained, he shall make his own agreements with the property owners affected for the use of such additional land.

B. In all such utility and/or drainage easements, the Contractor shall be required to carefully remove the property owner's fences, or other obstacles to the construction procedure, and replace the same after the work is installed. The backfilling shall be to the grade of the existing ground level or to the grade as established by the property owner in the event the property owner permits the deposit of excess material upon such land.

C. The cost of all such restoration of property shall be borne by the Contractor.

1.6 OPERATIONS WITHIN RIGHT-OF-WAY

In public thoroughfares, all operations of the Contractor, including those of temporary nature, must be confined within the applicable right-of-way limits after having obtained approval of the Town or other Local Governing Entity. If the methods of the construction employed by the Contractor are such as to require the use of land beyond the public thoroughfares, he shall make his own agreements with the property owners affected for the use of such additional.

1.7 PERMITS

A. The Developer will obtain permits which relate to the completed facilities. Permits obtained by the Developer include permits from the following:

1. Town of Westfield
2. Department of Natural Resources
3. U.S. Army Corps of Engineers
4. Indiana Department of Fire Prevention & Building Safety
5. Indiana Department of Transportation
6. Railroads
7. Hamilton County Surveyor's Office

8. Hamilton County Highway Department

B. The Contractor shall obtain permits which relate to construction procedures.

1. All necessary permits or licenses required from the State, County, or Town or other Local Governing Entity in connection with construction procedures under or along existing highways shall be obtained by and at the expense of the Contractor. The construction shall be performed by the Contractor in full accordance with any and all requirements of the State Highway Commission, County Road Commission, WPWD, or other Local Governing Entity including those applying to barricades, watchmen, guarding, lighting, storage of supplies, equipment and excavated materials, method of backfilling, final grading, replacement of pavement or road surface, and all other conditions or requirements which may be stipulated by the State Highway Commission, County Road Commission, or WPWD, whether specifically shown on the drawings or mentioned in the specification.

1.8 MAINTAINING TRAFFIC

A. Before closing any thoroughfare, the Contractor shall notify and, if necessary, obtain a permit or permits from the duly constituted public authority having jurisdiction, state, county, city/town. The contractor will be responsible for notifying the local school corporation, all public safety agencies and the Town. The Contractor shall provide the WPWD a detour route plan for review prior to the road closure.

B. The Contractor shall notify the Town of his intention to close a particular street 72 hours in advance of the proposed closing. The Contractor shall place all proper detour signs and barricades prior to the actual street closing.

C. During the construction, the Contractor shall be responsible for maintaining and protecting the pedestrian and vehicular traffic at all times on all streets involved and providing access to all residential and commercial establishments adjacent to the construction area. The Contractor shall furnish and maintain signage, barricades, flares, etc., in accordance with the latest version of the Indiana Manual on Uniform Traffic Control Devices. The signage, barricades, etc., must be in good condition.

D. The Contractor shall conduct his work in such a manner as not to unduly or unnecessarily restrict or impede normal traffic through the streets of the community. Insofar as it is practicable, do not locate excavated material

and spoil banks in such manner as to obstruct traffic. Keep the traveled way of all street, roads, and alleys clear and unobstructed insofar as is possible. Do not use streets, roads, or alleys for the storage of construction materials, equipment supplies, or excavated earth, except when and where necessary. If required by duly constituted public authority, the Contractor shall, at his own expense, construct bridges or other temporary crossing structures over trenches so as not to unduly restrict traffic. Such structures shall be of adequate strength and proper construction and shall be maintained by the Contractor in such manner as not to constitute an undue traffic hazard. Private driveways shall not be closed, except when and where necessary, and then only upon due advance notice to the WPWD and Homeowner, and for the shortest practicable period of time, consistent with efficient and expeditious construction. The Contractor shall be liable for any damage to persons or property resulting from his work.

E. Streets in which excavation has occurred shall be temporarily restored to receive traffic as soon as possible. Permission to close additional streets shall be denied if, in the opinion of the Town, the restoration on streets where excavation has occurred has not progressed satisfactorily.

1.9 WALKS AND PASSAGEWAYS

The Contractor, when required, shall make provisions at cross streets for the free passage of vehicles and foot passengers, either by bridging or otherwise. Do not obstruct the sidewalks, gutters, or streets, or prevent in any manner the flow of water in streets. Use all proper and necessary means to permit the free passage of surface water along the gutters. The Contractor shall immediately remove all matter, exercising such precaution as may be directed by the Town. All material excavated shall be so disposed of as to inconvenience the public and adjacent tenants as little as possible and to prevent injury to trees, sidewalks, fences, and adjacent property of all kinds. The Contractor may be required to erect suitable barriers to prevent such inconvenience or injury.

1.10 WARNING LIGHTS AND ARROW BOARDS

The Contractor shall place sufficient warning lights and arrow boards on or near the work and keep them illuminated during periods of construction and reduced visibility (from twilight in the evening until sunrise) and shall be held responsible for any damages that any party or the Developer may sustain in consequences of neglecting the necessary precaution in prosecuting this work.

1.11 UTILITIES

A. Temporary Removal: All existing Town utility systems which conflict with the construction of the work herein which can be temporarily

removed and replaced shall be accomplished at the expense of the Developer with approval from the WPWD. Work shall be done by the WPWD unless the WPWD approves, in writing, that the work may be done by the Developer or Contractor.

B. Permanent Relocation of Utilities: Water mains, storm sewer, gas lines, wire lines, service connections, water and gas meter boxes, water and gas valve boxes, light and traffic standards, cable ways, signals, and other utility appurtenances located in the public right-of-way which would permanently interfere with the proposed improvements will be moved by the utility involved and paid for by the Developer.

1.12 SUBMITTALS - CERTIFICATE OF COMPLIANCE

The Developer shall upon request of the Town Council or the WPWD, submit to the WPWD a Certificate of Compliance from the manufacturer and/or supplier of each and every specified material or manufactured equipment item. The Certificate shall state that the material or the item of equipment to be furnished has been manufactured with materials in accordance with the applicable sections of all required codes, specifications, and standards as required by the specifications.

1.13 MANUFACTURER'S SERVICE TIME

A. When a lift station or other equipment is to be furnished by the Developer or Contractor and maintained in the future by the WPWD, service by the manufacturer is required to be furnished as part of the work and shall be at the Contractor's expense.

B. The service provided shall be by a qualified representative to check the completed installation, place the equipment in operation, and instruct the Town's operators in the operation and maintenance procedures.

C. The services shall further demonstrate to the Town's complete satisfaction that the equipment will satisfactorily perform the functions for which it has been installed.

1.14 DIGITAL AS-BUILTS/RECORD DRAWINGS

The Developer will be responsible for preparation and submittal of digital as-builts/record drawings as required by the requirements set forth in the Town's Digital As-built requirements. A copy of the most recent requirements are available on the Town's website at http://www.westfield.in.gov/egov/docs/1157135335_990447.pdf. Additional information can also be received from the WPWD GIS Division.

END OF SECTION 01001

SECTION 02222 - EARTHWORK FOR UTILITIES

PART 1 - GENERAL

1.1 DESCRIPTION

A. Scope: Specifications for the stripping of topsoil and vegetation, excavation, trenching, bedding, filling, backfilling, compaction, and related work in connection with the installation of water mains, gravity sanitary sewers, storm sewers, and force mains are included in this Section.

B. Definitions

1. Excavation: Removal of earth and rock to form a trench for the installation of a water main, gravity sanitary sewer, storm sewer, or force main.
2. Earth: Unconsolidated material in the crust of the Earth derived by weathering and erosion. Earth includes:

a. Materials of both inorganic and organic origin;
b. Boulders less than 1/3 cubic yard in volume, gravel, sand, silt, and clay;
c. Materials which can be excavated with a backhoe, trenching machine, drag line, clam shell, bulldozer, highlift, or similar excavating equipment without the use of explosives, rock rippers, rock hammers, or jack hammers.

3. Rock: A natural aggregate of mineral particles connected by strong and permanent cohesive forces. Rock includes:

a. Limestone, sandstone, dolomite, granite, marble, and lava;
b. Boulders 1/3 cubic yard or more in volume;
c. Materials which cannot be excavated by equipment which is used to remove earth overburden without the use of explosives, rock rippers, rock hammers, or jack hammers;
d. Materials which cannot be excavated with a backhoe, trenching machine, drag line, clam shell, bulldozer, high-lift, or similar excavating equipment without the use of explosives, rock rippers, rock hammers, or jack hammers.

4. Undercutting: Excavation of rock and unsuitable earth below the bottom of the pipe or conduit to be installed in the trench.
5. Subgrade: Undisturbed bottom of a trench.
6. Bedding: Earth placed in trench to support pipe and conduit.

7. Backfill and Fill: Earth placed in trench from the top of bedding to finished grade, or to subbase of pavement.
8. Topsoil: Earth containing sufficient organic materials to support the growth of grass.

1.2 SITE CONDITIONS

Existing storm sewers, sanitary sewers, water mains, gas mains, electric ducts, fiber optic ducts, telephone ducts, steam mains and other under-ground structures, lines, and their house connections are to been shown on the plans according to the best available information. The exact location and protection of these facilities and structures, their support and maintenance in operation during construction (in cooperation with the proper authorities), is the responsibility of the Contractor.

PART 2 - PRODUCTS

2.1 BEDDING

A. Class I bedding shall be angular 6 to 12 mm (1/4 to 1/2 inch) graded stone, coral, crushed stone or crushed shells.

B. Class II bedding shall be coarse sands and gravels with maximum particle size of 20 mm (3/4 inch). Class II bedding includes variously graded sands and gravels containing small percentage of fines generally granular and non-cohesive, either wet or dry. Soil types GW (well-graded gravel), SW (well-graded sand), and SP (pea gravel and/or crushed stone mixed with sand) are included in this class.

2.2 BACKFILL

A. General: Backfill shall be earth of such gradation and moisture content that the soil will compact to the specified density and remain stable. Unsuitable materials shall not be used.

B. Cover Material: Pipe cover material shall consist of durable particles ranging in size from fine to coarse (No. 200 to 1 inch) in size in a substantially uniform combination. Unwashed bank run sand and crushed bank-run gravel will be considered generally acceptable. Bedding material may be used for cover material.

C. Granular Backfill - Special Backfill: Granular backfill, when indicated on the plans or as ordered by the Engineer, shall be used for backfilling providing it meets the Unified Soils Classification System ASTM D-2487 or the Indiana State Highway Standard Specification Section 211 - Special Fill and Backfill ("B" Borrow).

Group Symbols	Typical Names
GW	Well-graded gravels and gravel-sand mixtures, little or no fines
GP	Poorly graded gravels and gravel-sand mixtures, little or no fines
SW	Well-graded sands and gravelly sands, little or no fines
SP	Poorly graded sands and gravelly sands, little or no fines

D. Suitable Excavated Materials as Backfill: Excavated material shall be used when earth backfill is specified on the plans or where granular backfill or flowable fill is not specifically specified, provided that such material consists of loam, clay, or other materials which, are suitable for backfilling. Unsuitable backfill or frozen backfill material shall not be used. Suitable backfill shall be the following soils, classified by the Unified Soil Classification System, ASTM D-2487:

Group Symbols	Typical Names
GW	Well-graded gravels and gravel-sand mixtures, little or no fines
GP	Poorly graded gravels and gravel-sand mixtures, little or no fines
GM	Silty gravels, gravel-sand-silt mixtures
GC	Clayey gravels, gravel-sand-clay mixtures
SW	Well-graded sands and gravelly sands, little or no fines
SP	Poorly graded sands and gravelly sands, little or no fines
SM	Silty sands, sand-silt mixtures
SC	Clayey sands, sand-clay mixtures

ML Inorganic silts, very fine sands, rock flour, silty or clayey fine sands

CL Inorganic clays of low to medium plasticity, gravelly clays, sandy clays, silty clays, lean clays

E. Unsuitable Materials: Materials which are unsuitable for backfill include stones greater than 8 inches in their largest dimension, pavement, rubbish, debris, wood, metal, plastic, and the following soils, classified by the Unified Soil Classification System, ASTM D-2487:

Group Symbols	Typical Names
OL	Organic silts and organic silty clays of low plasticity
MH	Inorganic silts, micaceous or diatomaceous fine sands or silts, elastic silts
CH	Inorganic clays of high plasticity, fat clays
OH	Organic clays of medium to high plasticity
PT	Peat, muck, and other highly organic soils

F. Concrete Backfill: Concrete used for backfill around sewers, water mains, or other utility piping shall be Class B concrete.

G. Cellular Concrete: Light weight cellular concrete may be used for filling of abandoned sewers as a grouting mixture for filling voids and as a substitute for backfill concrete in tunnels or casing pipes. The cellular concrete shall be produced by blending preformed foam with cement-sand grout slurry to produce a concrete having a fresh weight per cubic foot of not less than 75 pounds.

H. Flowable Fill

1. Flowable fill shall be in accordance with INDOTSS Section 213 and as specified herein.

a. Unconfined Compressive Strength (28 day): 50-150 psi
b. Flow Test - Diameter of Spread: 8 inches ± 1 inch

2. Design: Mix design shall be required to be submitted and approved by the WPWD or designated engineer. A trial batch

demonstration may be required. The mix design shall include a list of all ingredients, the source of all materials, the gradation of all aggregates, the names of all admixtures and dosage rates, and the batch weights. Except for adjustments to compensate for routine moisture fluctuations, minor mix design changes after the trial batch verification shall be documented and justified prior to implementation by the Contractor. A change in the source of materials or addition or deletion of admixtures or cementitious materials will require the mix design to be re-submitted for approval. The Contractor shall be required to provide test data from a laboratory which shows that the proposed mix design is in accordance with the requirements listed in this specification.

PART 3 - EXECUTION

3.1 EXISTING UTILITIES, STRUCTURES, AND PROPERTY

A. All poles, fences, sewer, fiber optic, gas, water or other pipes, wires, conduits and manholes, railroad tracks, buildings, structures and property along the routes of water mains, force mains, and sewers shall be supported and protected from damage by the Contractor.

B. Movable items such as mail boxes may be temporarily relocated during construction. Place movable items in their original location immediately after backfilling is completed, unless otherwise shown on the drawings. Replace movable items which are damaged during construction.

C. The Contractor shall proceed with caution in the excavation and preparation of trenches so that the exact location of underground utilities and structures, both known and unknown, may be determined. The Contractor shall be responsible for the repair of utilities and structures when broken or otherwise damaged.

D. Whenever, in the opinion of the WPWD, it is necessary to explore and excavate to determine the location of underground structures, the Contractor shall make explorations and excavations for such purpose.

E. Wherever sewer, gas, water, or other pipes or conduits cross the trench, the Contractor shall support said pipes and conduits without damage to them. The manner of supporting such pipes, etc., shall be subject to the approval of the owner of the utility involved.

F. When utility lines that have to be removed or relocated are encountered within the areas of operations, the Contractor shall notify the WPWD or

the owner of that utility in ample time for the necessary measure to be taken to prevent interruption of the service.

G. The Contractor shall so conduct the work that no equipment, material, or debris will be placed or allowed to fall upon private property in the vicinity of the work unless he shall have first obtained the property owner's written consent thereto and shall have shown said written consent to the Town.

H. All excavated material shall be piled in a manner that will avoid obstructing sidewalks and driveways. Hydrants under pressure, valve pit covers, valve boxes, curb stop boxes, fire and police call boxes, or other utility controls shall be left unobstructed and accessible until the work is completed. Gutters shall be kept clear or other satisfactory provisions made for street drainage, and natural watercourses shall not be obstructed.

I. All streets, alleys, pavements, parkways, and private property shall be thoroughly cleaned of all surplus materials, earth, and rubbish placed thereon by the Contractor.

3.2 CLEARING

A. Clear and remove logs, stumps, brush, vegetation, rubbish, and other perishable matter from the project site as required to perform work.

B. Do not remove or damage trees that do not interfere with the work. Completely remove trees required to be removed, including stumps and roots. Properly treat damaged trees which can be saved.

C. Debris from the tree removal, including trunk, branches, leaves, roots and stumps, shall not be buried or burned on the job site, but must be completely hauled away and disposed of at the Contractor's expense.

D. Clear and remove trees, logs, stumps, brush, vegetation, rubbish, and other perishable matter from the existing and proposed right of way.

3.3 STRIPPING AND STOCKPILING OF TOPSOIL

A. Strip topsoil and vegetation from the excavated areas. Clean topsoil may be stockpiled for reuse as the upper 6 inches of the areas to be seeded.

3.4 PAVEMENT AND WALK REMOVAL

A. Remove existing pavement and walks from the excavated areas. Remove excavated asphaltic and concrete materials from the job site as these materials are excavated.

B. The width of pavement removed along the normal trench for the installation of pipe and structures shall not be less than two (2) feet on either side of the trench and be in accordance with Standard Detail P-18. Remove all existing pavement when the excavation requires the removal of 75% or more of the total existing pavement width. If over 50% of one travel lane is disturbed, restoration must be extended to the centerline of the roadway..

C. Remove walks completely when excavation is along the length of a walk and requires the removal of part of the walk. Remove walks to existing joints in the walks when excavation crosses walks. If there are no joints in an existing walk, the width of walk removed shall not exceed the width of the trench by more than 12 inches on each side of the trench.

D. Use methods to remove pavement and walks that will assure the breaking or cutting of pavement and walks along straight lines. The face of the remaining pavement and walk surfaces shall be approximately vertical.

E. All concrete sidewalk and asphalt multiuse path removed must be replaced per the WPWD Standards Section 02500 and Standard Details P-10, P-11, and P-16. All restoration work is subject to inspection by WPWD.

3.5 EXCAVATING

A. General: After stripping of topsoil and vegetation, perform excavations of every description regardless of material encountered within the grading limits of the project to lines and grades as indicated on the drawings or as otherwise specified.

1. Materials removed below the depths indicated shall be replaced to the indicated excavation grade with satisfactory bedding materials placed and compacted. The Contractor will minimize over excavation.

B. Dewatering: Keep excavations free from water until the water mains, force mains, sewers, structures, and appurtenances to be constructed in the excavations are completed and will safely withstand forces from water. Provide sufficient dewatering equipment and make satisfactory arrangements for the disposal of the water without undue interference with other work, damage to property, or damage to the environment.

1. Operate dewatering equipment ahead of pipe laying and keep the water level below the pipe invert until the pipe is secured by backfill.

C. Trenching: Trees, boulders, and other surface encumbrances, located so as to create a hazard to employees involved in excavation work or in the vicinity thereof at any time during operations, shall be removed or made safe before excavating is begun.

1. Do not open more than 100 feet of trench in advance of the installed pipe, unless otherwise directed or permitted by the WPWD or designee. Excavate the trench within 6 inches of full depth for a distance of at least 30 feet in advance of the pipe laying, unless otherwise directed or permitted.
2. Contractor shall be responsible for the determination of the angle of repose of the soil in which the trenching is to be done. Excavate all slopes to at least the angle of repose except for areas where solid rock allows for line drilling or presplitting, or where shoring or trench box is to be used.
3. Sides, slopes, and faces of all excavations shall meet accepted engineering requirements by scaling, benching, barricading, rock bolting, wire meshing, or other equally effective means. Give special attention to slopes which may be adversely affected by weather or moisture content.
4. Flatten the trench sides when an excavation has water conditions, silty materials, loose boulders, and areas where erosion, deep frost action, and slide planes appear.
5. Shoring, sheeting, trench box, or other means shall be used to support sides of trenches in hard or compact soil when the trench is more than 5 feet in depth and 8 feet or more in length. Sides of trenches shall include embankments adjacent to trenches. In lieu of shoring, the sides of the trench above the 5-foot level may be sloped to preclude collapse, but shall not be steeper than a 1-foot rise to each 1/2-foot horizontal. Provide a bench of 4 feet minimum at the toe of the sloped portion of the trench wall when the outside diameter of the pipe to be installed is greater than 6 feet.
6. Use diversion ditches, dikes, or other suitable means to prevent surface water from entering an excavation and to provide adequate drainage of the area adjacent to the excavation. Do not allow water to accumulate in an excavation. If possible, the grade should be away from the excavation.
7. Excavations shall be inspected by a competent Contractor's representative after every rainstorm or other hazard-increasing

occurrence, and the protection against slides and cave-ins shall be increased, if necessary.
8. Do not store excavated or other material nearer than 4 feet from the edge of any excavation. Store and retain materials as to prevent materials from falling or sliding back into the excavation. Install substantial stop log or barricades when mobile equipment is utilized or allowed adjacent to excavations.
9. The width of trenches in earth for water main pipe, sewers, basin connections, house connections, and other drains up to and including 33 inches in internal diameter shall provide a clearance of not less than 8 inches or more than 10 inches on each side of the pipe. Trenches for pipe larger than 33 inches in internal diameter shall provide a clearance of not less than 10 inches or more than 14 inches on each side of the pipe.
10. The maximum clear width of trenches in earth for manholes shall be the greatest external width of the structure plus the space necessary for the construction and removal of the forms and construction of masonry work.
11. The design of the water main, force main, and/or sewer pipe and structures is predicated upon the width of trench specified in this Article. The Contractor shall be responsible for the provision and installation, at his own expense, of such remedial measures as may be directed by the WPWDor designee; should the trench width limits specified in this Article be exceeded.
12. Test the air in excavations in locations where oxygen deficiency or gaseous conditions are possible. Establish controls to assure acceptable atmospheric conditions. Provide adequate ventilation and eliminate sources of ignition when flammable gases are present. Attended emergency rescue equipment, such as breathing apparatus, a safety harness and line, and basket stretcher, shall be readily available where adverse atmospheric conditions may exist or develop in an excavation.
13. Provide walkways or bridges with guardrails where employees or equipment are required or permitted to cross over excavations. Provide ladders where employees are required to be in trenches 4 feet deep or more. Ladders shall extend from the floor of the trench to at least 3 feet above the top of the excavation. Locate ladders to provide means of exit without more than 25 feet of lateral travel.
14. Provide adequate barriers and physically protect all remotely located excavations. Barricade or cover all wells, pits, shafts, and similar excavations. Backfill temporary wells, pits, shafts, and similar excavations upon completion of exploration and similar operations.

D. Quicksand: Carry on the work with utmost vigor and proceed with the work expeditiously when running sand, quicksand, or other bad or treacherous ground is encountered. Install bedding to support the pipe as directed.

E. Blasting: Removal of rock from the excavation may be facilitated by the use of controlled explosives.

1. Blasting supervision and Blasting Monitoring and Control Programs shall meet the requirements of this Section.
2. Storage procedures for explosives shall be developed by the Contractor and submitted to the Engineer before explosives are brought to the job site.

3.6 SHEETING

A. The Contractor shall be responsible for coanstruction means, methods, techniques, and procedures, and for providing a safe place for the performance of the work by the Contractor, Subcontractors, suppliers and their employees, and for access use, work, or occupancy by all authorized persons.

B. The Contractor shall be solely responsible for all obligations prescribed as employer obligations under Chapter XVII of Title 29, Code of Federal Regulations, Part 1926, otherwise known as "Safety and Health Regulations for Construction."

C. Adequate supporting systems, such as sheeting, shoring, piling, cribbing, and bracing shall be furnished and installed by the Contractor as required to protect existing buildings, utilities, and property from damage during the progress of the work.

3.7 STORAGE AND REMOVAL OF EXCAVATED MATERIAL

A. Suitable excavated material required for filling and backfilling operations may be stockpiled in on-site locations, at the discretion of the WPWD or designee, until the material is ready to be placed.

B. Remove unsuitable materials from the job site as unsuitable materials are excavated. Remove surplus suitable materials from the job site as trenches are backfilled.

3.8 TEMPORARY PLUGS

Prevent foreign matter from entering pipe while it is being installed. Do not place debris, tools, clothing, or other material in the pipe. Close the open ends of pipe by securing watertight plugs when pipe laying is not in progress. Remove any earth or other material that enters pipe, lateral pipe, or appurtenances through any upon pipe end.

3.9 BACKFILLING WATER MAIN AND FORCE MAIN TRENCHES

A. Backfilling of water main and force main trenches shall meet the requirements of ANSI/AWWA C600, unless otherwise specified in this Section.

B. Do not backfill trenches and excavations until all utilities have been inspected by the WPWD or designee and until all underground utilities and piping systems are installed in accordance with the requirements of the specifications and the drawings. Required hydrostatic tests may be applied to the line either before and after the trench is backfilled, subject to approval of the WPWD or designee.

C. Place and tamp bedding and backfill in a manner which will not damage pipe coating, wrapping, or encasement.

D. Material from the trench subgrade to the centerline of the pipe shall be Class II bedding. Place bedding by hand or approved mechanical methods in layers of 8 inches loose depth. Compact bedding by hand tamping or with a power operated hand vibrating compactor. Deposit bedding in the trench for its full width on each side of the pipe simultaneously.

E. Place pipe cover material from the centerline of the pipe to 12 inches over the pipe. Compact pipe cover material to the density required to allow backfill over the pipe cover material to be compacted to the density specified in this Article.

F. Do not use the following materials for backfill:

1. Unsuitable materials;
2. Frozen materials;
3. Materials which are too wet or too dry to be compacted to the densities specified in this Article.

G. Where the edge of the trench is within 5 feet of the existing roadway pavement, it shall be backfilled with Flowable Backfill. Where the trench is located within existing pavement or any trench specifically indicated on the drawings shall be backfilled with Flowable Backfill. Where the edge of the trench is within 5 feet or crosses a proposed roadway pavement, it shall be backfilled with Flowable Backfill. Place Flowable Backfill in lifts. In all areas, cuts and trenches shall be backfilled with Flowable backfill to within 1 ½" inches of the existing asphalt paved surface The remainder of the trench is to be filled with crushed stone and compacted in place, prior to opening the street to traffic. The Contractor shall add crushed stone and grade until sufficient settlement has taken place and final restoration is made.

3.10 BACKFILLING SANITARY SEWER AND STORM SEWER TRENCHES

A. Do not backfill trenches and excavations until all utilities have been inspected by the WPWDor designee and until all underground utilities and piping systems are installed in accordance with the requirements of the specifications and the drawings.

B. Place and tamp bedding and backfill in a manner which will not damage pipe coating, wrapping, or encasement.

C. Bedding procedures for sanitary sewers and storm sewers shall be as specified in Manufacturer's recommendation, or WPWD specifications. The more stringent specification will apply..

D. If bedding does not cover the pipe, place pipe cover material from the top of bedding to 12 inches over the pipe. Compact pipe cover material to the density required to allow backfill over the pipe cover material to be compacted to the density specified in this Article.

E. Do not use the following materials for backfill:

1. Unsuitable materials;
2. Frozen materials;
3. Materials which are too wet or too dry to be compacted to the densities specified in this Article.

F. Where the edge of the trench is within 5 feet of or crosses the existing roadway pavement, it shall be backfilled with Flowable Backfill. Backfill any trench specifically indicated on the drawings with Flowable Backfill.

STOEPPELWERTH & ASSOCIATES, INC.
CONSULTING ENGINEERS & LAND SURVEYORS
7965 East 106th Street, Fishers, IN 46038-2505
Phone: (317) 849-5935 Fax: (317) 849-5942
Toll Free: (800) 728-6917

BY | REVISIONS | MARK | DATE

JAMES O. RINEHART IV
REGISTERED
No. 10200495
STATE OF INDIANA
PROFESSIONAL ENGINEER

THIS DRAWING IS NOT INTENDED TO BE USED AS A RETRACEMENT SURVEY, A ROUTE SURVEY OR A SURVEYOR LOCATION REPORT.

CERTIFIED: 1/27/11

CONSTRUCTION SPECIFICATIONS

STORAMERICA

HAMILTON COUNTY, INDIANA

WESTFIELD

DRAWN BY: KRG | CHECKED BY: BKR

SHEET NO. C802

S & A JOB NO. 59815RAD

CHAPTER 400 STORM SEWER PIPES AND OPEN CULVERT MATERIALS

SECTION 401 GENERAL

401.01 Introduction

This section covers all work necessary for the construction of the storm sewer piping systems and related items complete, including catch basins and inlet drains, manholes, junction chambers, diversion chambers, outfall structures, and miscellaneous structures.

This specification covers the following types of materials for storm sewers, culverts, underdrains, inlet drains, conduits, and miscellaneous applications:

1. Reinforced Concrete Pipe and Fittings
2. Polyvinyl Chloride Pipe (PVC)
3. Corrugated Metal Pipe
4. Structural Plate Arches
5. Aluminum or Aluminized Steel Pipe and Structural Plate
6. Multi-Plate Pipe and Pipe Arches
7. PVC Composite Pipe
8. Corrugated Polyethylene Pipe- SSD (Perforated and Non-Perforated)

All lots shall have access to a subsurface or storm drain or open ditch.

Storm sewer systems shall have a minimum of four hundred (400) feet between structures.

This specification requires project plans and construction specifications to be submitted to and approved by all appropriate regulatory agencies prior to beginning any work.

Before construction and preferably before fabrication, the Contractor shall submit to the Town of Westfield Public Works Department for approval calculations on the thickness or strength class and drawings showing pipe lengths, joints, and other construction and installation details.

Pipe Marking
Each length of pipe shall bear the name or trademark of the manufacturer, the location of the plant, and the date of manufacture. Each length shall likewise be marked to designate the class or strength of the pipe. The marking shall be made on the exterior or interior of the pipe barrel near the bell or groove end and shall be plainly visible.

401.02 Minimum Size for Storm Sewers

The minimum diameter of all storm sewers shall be 12 inches. When the minimum 12-inch diameter pipe will not limit the rate of release to the required amount, the rate of release for detention storage shall be controlled by an orifice plate or other device, subject to acceptance of the Town of Westfield Public Works Department.

401.03 Materials

Manholes, Inlets, and Other Structures

Storm sewer manholes and inlets shall be constructed of precast reinforced concrete. Material and construction shall conform to the latest edition of the Indiana Department of Transportation (INDOT) "Standard Specifications", Sections 702 and 720.

Materials for manholes, junction chambers, diversion chambers, and miscellaneous concrete structures shall comply with the following:

1. Cement shall be Portland cement and shall meet the requirements of ASTM Specification C150, ACI 301, and ACI 318. Concrete for precast manhole sections shall be 3000 psi concrete. Monolithic manholes shall use 4000 psi concrete. Ready-mix concrete shall conform to ASTM C94, Alternate 2. Maximum size of aggregate shall be 3/4 inch. Slump shall be between 2 and 5 inches.
2. Forms for chamber and structures shall be plywood or other approved material. Steel forms shall be used for the inside face of monolithic concrete manholes.
3. Reinforcing steel shall conform to ASTM A615, Grade 60 deformed bars, or ASTM A616 Grade 60 deformed bars.
4. Mortar Materials:
   a. Sand - ASTM Designation C144, passing a No. 8 sieve.
   b. Cement - ASTM Designation C150, Type 1.
   c. Water - shall be potable.

The manufacturer shall provide openings for sewers entering and leaving the manhole. Any additional openings needed to be made in the field shall be made by drilling holes at least 1/2 inch in diameter with a maximum spacing of 3 inches.

Manhole steps shall be made from a steel reinforcing rod encapsulated in a copolymer polypropylene resin. The manhole steps shall equal or exceed OSHA requirements.

Any other special manholes, junction chambers, diversion chambers, and miscellaneous concrete structures shall be constructed as detailed on the drawings.

Manhole bases shall be set on a minimum of six (6) inches of # 8 aggregate.

Concrete ends sections shall have a minimum of a twenty-four (24) inch toe plate, either poured in place or precast, bolted to the end section per Standard Detail (ST-30). Corrugated end sections with toe plates shall require Westfield Public Works approval.

Catch Basins

During construction, precautionary measures such as adequate screening of grates shall be maintained to deter earth and other materials from entering the drains.

Catch Basins, for sediment control, locations to be determined by a Professional Engineer, and approved by the Town of Westfield Public Works Department. Catch Basins shall be located within easily accessible dedicated easements or right of way of sufficient size to facilitate the required maintenance of these structures

Catch basins and curb inlet structures which are two (2) feet by two (2) feet in size shall not have a depth deeper than four (4) feet from the invert of the lowest pipe to the lowest part of the rim

elevation of the casting. All structures which do not meet this criteria shall be a manhole type, which is forty-eight (48) inches in diameter.

Castings

Cast iron or ductile iron frames and gratings for catch basins and drain inlets shall be as shown on the drawings. Bearing surfaces shall be clean and shall provide uniform contact. Castings shall be tough, close-grained gray iron, sound, smooth, clean, free from blisters, blow holes, shrinkage, cold shuts, and all defects and shall conform to ASTM A48 Class No. 30-B.

During construction, precautionary measures such as adequate screening of grates shall be maintained to deter earth and other materials from entering the drains.

The following castings types are required:

1. Manholes – Neenah R 1772.A or equivalent
2. Beehive Inlets – Neenah R 4342 or equivalent
3. "Roll Curb" Inlets – Neenah 3501 – TR or TL or equivalent
4. "Chair Back" Curb Inlet – Neenah 3287 – 10V or equivalent
5. Other types shall require approval of the Westfield Public Works Department.

Curb inlets castings which possess open backs or have grate bars parallel to traffic flow (are not "bicycle safe) will not be accepted by the Westfield Public Works Department.

Storm sewer castings manhole covers, beehive inlets, curb inlets or other approved casting shall have the following phrases cast in recessed letters two (2) inches in height:

1. "Storm Sewer"
2. "Drains to River" or "Drains To Waterway"
3. "Dump No Waste"
4. Other phrases shall require approval of the Westfield Public Works Department.

All castings frames shall have a horizontal bearing surface around the entire perimeter of the frame in order to support the cover or grate.

Bench Walls
Bench walls shall be shaped and formed for a clean transition with proper hydraulics to allow the smooth conveyance of flows through the structure. The bench wall shall form a defined channel, to a minimum height of the spring line of the pipe.

Bench walls shall be formed using full depth Class "A" concrete. Solid concrete block, stone or sand shall not be permitted as a base or filler for the construction of the bench wall.

Reinforced Concrete Pipe and Fittings

Reinforced concrete pipe and fittings shall conform to ASTM C76, latest revision, for circular pipe and ASTM C507 for elliptical pipe.

Reinforced concrete pipe and fittings for normal conditions shall be reinforced in accordance with ASTM C76, Class III, IV or V, Wall B (minimum). Acceptance shall be on the basis of Subsection 4.1.1 of ASTM C76.

Circumferential reinforcing in circular pipe shall be required. Only with approval from the Westfield Public Works Department will elliptical reinforcing or combination of elliptical and circumferential reinforcing or part circular reinforcing shall be permitted, in circular pipe.

Concrete pipe shall be steam cured and shall not be shipped from point of manufacture for at least five days after having been cast.

Joints shall conform to the requirements of ASTM C443. Gaskets shall be of an oil resistant type having a maximum swell of 90% when tested in accordance with ASTM D471. Lubricant for jointing shall be approved by gasket manufacturer.

All rubber gaskets similar to and equal to "Press-Seal" or "Tylox" conforming to ASTM Designation C443, latest revision. The gasket shall be attached to the spigot of the pipe and shall be the sole element depended upon to make the joint flexible and practically watertight.

Butyl mastic joint sealant in rope or trowel applied form specifically made for permanently sealing joints in tongue and groove concrete sewer pipe. The material shall adhere tightly to the pipe surface and form a tight, flexible joint. The material shall have been in use for at least five years. Test results and material specifications shall be submitted to the Westfield Public Works Department and shall have been approved prior to use on the project.

Polyvinyl Chloride Pipe and Fittings

Polyvinyl chloride (PVC) pipe and fittings shall comply with ASTM D 3034.

Corrugated Metal Pipe and Pipe Arches

The following specifications shall govern the manufacture of the corrugated steel pipe and pipe arches.

1. Specifications for Zinc Coated (galvanized) Steel Sheets (ASTM A444).
2. Manufacture of Corrugated Steel Culverts and Underdrains (AASHTO M-36).
3. Structural Plate for Pipe, Pipe-Arches, and Arches (AASHTO M-167.
4. Bituminous Coated Corrugated Steel Pipe and Arches (AASHTO M-190).
5. Sheet Material (ASTM A525).

Bituminous Coated Welded Seam Helically Corrugated Steel Pipe

The pipe shall be fabricated from flat coils. The base metal, spelter coating, and fabrication shall meet the applicable requirements of AASHTO M-36. Corrugations shall be 2-2/3-inch pitch by 1/2-inch depth. Each pipe shall have two annular corrugations rolled in each end. After the ends are rolled, the pipe shall be coated with bituminous material, inside and outside, to a minimum thickness of 0.05 inch as required by AASHTO M-190 for Type A coating.

Bituminous Coated and Paved Invert Welded Seam Helically Corrugated Steel Pipe

The pipe shall be fabricated from flat coils. The base metal, spelter coating, and fabrication shall meet the applicable requirements of AASHTO M-36. Corrugations shall be 2-2/3-inch pitch by 1/2-inch depth. Each pipe shall have two annular corrugations rolled in each end.

After the ends are rolled, the pipe shall be coated with bituminous material, inside and outside, to a minimum thickness of 0.05 inch. In addition, bituminous material shall be applied to form a

smooth pavement in the bottom 25% of pipe and in the bottom 40% of pipe arch as required by AASHTO M-190 for Type C coating.

Smooth Lined Welded Seam Helically Corrugated Steel Pipe

The pipe shall be fabricated from flat coils. The base metal, spelter coating, and fabrication shall meet the applicable requirements of AASHTO M-36. Corrugations shall be 2-2/3-inch pitch by 1/2-inch depth. Each pipe shall have two annular corrugations rolled in each end. Each pipe shall have two lifting lugs welded to the outside of the pipe.

After the ends have been rolled, the pipe shall be coated with bituminous material, inside and outside, to a minimum thickness of 0.05 inch as required by AASHTO M-190 for Type A coating. The pipe shall be centrifugally lined on the inside with bituminous material to form a smooth surface which fills the corrugations to a minimum thickness of 1/8 inch above the crests of the corrugations. The bituminous lining material shall meet the requirements of AASHTO M-190.

Bituminous Coated Pipe Couplings
Coupling bands shall be the same base metal and spelter coating as the pipe. Bands shall be 0.064-inch thick and 10-1/2 inches wide. Bands shall be bituminous coated and shall have two corrugations 7-5/8 inches center to center. Bands 12-inch diameter through 30-inch diameter shall be one-piece, and 36-inch diameter through 96-inch diameter shall be two-piece. Band lugs 12-inch diameter through 48-inch diameter shall be joined by one galvanized bar, bolt, and strap connector. Band lugs 54-inch diameter through 96-inch diameter shall be joined by two galvanized bar, bolt, and strap connectors.

Aluminum Alloy Structural Plate

Aluminum alloy plates and fasteners intended for use in the construction of structural plate pipe and pipe arch for storm sewers shall meet the applicable requirements of AASHTO M-219. The plate shall be fabricated from aluminum alloy 5052.H141. The chemical composition of the plates shall conform to ASTM B209 alloy 5052.

The corrugations shall have a pitch of 9 inches plus or minus 3/8 inch and depth of 2-1/2 inches plus or minus 1/8 inch. The inside crown radius of the corrugations shall be not less than 2 inches.

The structural plate pipe or arches shall be assembled in accordance with the manufacturer's erection instructions and in accordance with the drawings.

Aluminized Steel Pipe and Arches

Aluminized coated corrugated steel pipe and pipe arch intended for use in the construction of storm sewers shall meet the applicable requirements of AASHTO M-36. Sheet material shall meet the latest revision of ASTM A525 and AASHTO M-274. The coils from which the pipe is produced shall be coated with 1.0 ounce per square foot of commercially pure aluminum

Pipe shall be furnished circular or as a pipe-arch shape as required and shall be fabricated with helical corrugations and a continuous welded seam extending from end to end of each length of pipe.

Each end of each pipe with the welded seam shall have two annular corrugations reformed to permit joining with hugger bands.

Coupling bands shall be hugger bands.

Multi-plate Pipe and Pipe Arches

Multi-plate pipe and pipe arch structures shall be in accordance with AASHTO M-167. They shall be made with steel sections with corrugations 6 inches wide by 2 inches deep running at right angles to the section.

Bolts and nuts shall be special heat-treated galvanized 3/4-inch diameter bolts in accordance with ASTM specifications.

Multi-plate pipes and pipe arches shall be designed in accordance with the manufacturer's design criteria and in accordance with the drawings.

Detailed instructions regarding erection shall be furnished by the manufacturer.

PVC Composite Pipe and Fittings

ABS or PVC composite pipe and fittings shall conform to ASTM D 2680, Latest Revision.

Corrugated Polyethylene Pipe and Fittings

Corrugated polyethylene pipe shall comply with the requirements fore materials, test methods, dimensions, and marking in accordance with AASHTO M-252 for pipe diameters 6" - 10", AASHTO M-294 for pipe diameters of 12" - 48", and AASHTO MP7 for 54" and 60".

The resin material shall meet ASTM D3350 cell classification 335400C.

The pipe lengths shall be connected using a gasketed, bell and spigot joint. This joint shall consist of a factory installed, gasketed double bell polyethylene coupling, a factory welded bell or longral bell. The spigot end of the pipe shall be furnished with a factory installed elastomeric profile "O-ring" rubber gasket that meets ASTM F-477.

The pipe shall be shipped with a removable wrap to protect the gasket. Provide lubrication to the joint prior to pushing together. At least two (2) corrugations of the spigot end must insert into the bell end.

All HDPE pipe shall be certified through the Plastic Pipe Institute (PPI) Third Party Certification Program. All HDPE pipe delivered and installed shall bear the Third Party Administered PPI Seal.

Subsurface Drain Tiles

Double wall smooth bore corrugated polyethylene tile, manufactured under specification ASTM F 667, shall be required for all subsurface drain tile installed in swales. Single wall corrugated polyethylene drain tile shall be required for curb sub-grade drainage.

Polyethylene tile shall possess male and female pipe ends, which allow the construction of overlapping, gasket pipe joints, in conformance with the requirements of ASTM D 3212. The gasket material shall conform to all requirements of ASTM F 477. As an alternative, pipe joints utilizing external couplings bands will be accepted, provided the minimum AASHTO requirements for satisfying soil tightness are also achieved.

Storm sewer pipe shall be of the size shown on the drawings and shall meet all requirements of these specifications. Subsurface drains (SSD) shall have a minimum of four hundred (400) feet between structures. Subsurface drains shall have clean-outs installed every 400 feet or at changes in direction.

CHAPTER 500 INSTALLATION OF STORMWATER FACILITIES

SECTION 501 GENERAL

Pipe

501.01 Pipe Cover, Grade, and Separation from Sanitary Sewers

Pipe grade shall be such that, in general, a minimum of 2.0 feet of cover is maintained over the top of the pipe. If the pipe is to be placed under pavement, then the minimum pipe cover shall be 2.5 feet from top of pavement to top of pipe. Uniform slopes shall be maintained between inlets, manholes and inlets to manholes. Final grade shall be set with full consideration of the capacity required, sedimentation problems, and other design parameters. Minimum and maximum allowable slopes shall be those capable of producing velocities of between 2.5 and 10 feet per second, respectively, when the sewer is flowing full. Maximum permissible velocities for various storm sewer materials are listed in **Table 501-1**. A minimum of 2.0 feet of vertical separation between storm sewers and sanitary sewers shall be required. When this is not possible, the sanitary sewer must be encased in concrete or ductile iron within 5 feet, each side, of the crossing centerline.

Rear Yard Swale

Rear yard swales shall have a minimum slope of 2% gradient. Swales less than a 2% gradient are required to have double-wall perforated drain tile installed two (2) feet below the invert of the swale. Minimum swale slope shall be greater than 1% gradient. Subsurface drains shall have a minimum slope of .5% gradient.

Proposed road grades will be required to be graded within two (2) inches of the proposed sub-grade prior to installation of SSD. Trench width for SSD shall be a minimum of three (3) inches on both sides of the SSD, with a minimum trench width of twelve (12) inches.

501.02 Alignment

Storm sewers shall be straight between manholes and/or inlets.

501.03 Manholes/Inlets

All Manholes and Inlets must be pre-stamped with an appropriate message per the Town of Westfield Public Works Department Standards. Manholes and/or inlets shall be installed to provide human access to continuous underground storm sewers for the purpose of inspection and maintenance. The casting access minimum inside diameter shall be no less than 22 inches or a rectangular opening of no less than 22 inches by 22 inches. Manholes shall be provided at the following locations:

1. Where two or more storm sewers converge.
2. Where pipe size or the pipe material changes.
3. Where a change in horizontal alignment occurs.
4. Where a change in pipe slope occurs.
5. At intervals in straight sections of sewer, not to exceed the maximum allowed. The maximum distance between storm sewer manholes shall be as shown in **Table 501-2**.

In addition to the above requirements, a minimum drop of 0.1 foot through manholes and inlet structures should be provided. Pipe slope should not be so steep that inlets surcharge (i.e. hydraulic grade line should remain below rim elevation).

Manhole/inlet inside sizing shall be according to the Town of Westfield Public Works Department Standards. Note that the Town of Westfield Public Works Department may require the applicant to provide pre-treatment BMPs prior to discharge of the storm sewer line into a pond.

501.04 Installation and Workmanship

Bedding and backfill materials around storm sewer pipes, sub-drains, and the associated structures shall be according to the Town of Westfield Public Works Department Standards. The specifications for the construction of storm sewers and sub-drains, including backfill requirements, shall not be less stringent than those set forth in the latest edition of the "INDOT Standard Specifications". Additionally, ductile iron pipe shall be laid in accordance with American Water Works Association (AWWA) C-600 and clay pipe shall be laid in accordance with either American Society of Testing Materials (ASTM) C-12 or the appropriate American Association of State Highway and Transportation Officials (AASHTO) specifications. Dips/sags on newly installed storm systems will not be allowed. Also, infiltration from cracks, missing pieces, and joints shall not be allowed. Variations from these standards must be justified and receive written acceptance from the Town of Westfield Public Works Department. All structures shall require inspection prior to backfill.

501.05 Special Hydraulic Structures

Special hydraulic structures required to control the flow of water in storm runoff drainage systems include junction chambers, drop structures, stilling basins, and other special structures. The use of these structures shall be limited to those locations justified by prudent planning and by careful and thorough hydraulic engineering analysis. Certification of special structures by a certified Structural Engineer may also be required.

The use of stormwater lift stations will not be permitted under any circumstances.

501.06 Connections to Storm Sewer System

Unless otherwise approved, perforated subsurface drain tiles, footer drains, or sump pumps lines shall connect to a storm structure. Storm sewer connections shall be provided by either precast or drilled holes, which are to be a minimum of two (2) inches larger the O.D. of the connecting tile. Drain tile connections shall be made with either "Tee" or "Wye" method.

Blind connections to storm sewer pipes shall not be allowed.

Subsurface tile as specified herein may be used to convey water collected in sump pits and footer drains to an acceptable storm sewer outlet, provided these drain tiles are properly sized to accept these flows.

Gutter or building drains shall not be allowed to outlet directly into storm sewer systems.

To allow any connections to the storm sewer system, provisions for the connections shall be shown in the drainage calculations for the system. Specific language shall be provided in the protective covenants, on the record plat, or with the parcel deed of record, noting the ability or inability of the system to accommodate any permitted connections, for example, sump pumps and footing drains.

1. Sump pumps installed to receive and discharge groundwater or other stormwater shall be connected only into "T" subsurface drain (SSD) lateral connection if provided. When connection to the SSD is not possible, discharge pipe must daylight. Sump pumps installed to receive and discharge floor drain flow or other sanitary sewage shall be connected to the sanitary sewers. A sump pump shall be used for one function only, either the discharge of stormwater or the discharge of sanitary sewage, each being connected to the respective receiving system only.

2. **Footing drains and perimeter drains** shall be connected only into "T" subsurface drain (SSD) lateral connection if provided. When connection to the SSD is not possible, discharge pipe must daylight.
3. All **roof downspouts**, roof drains, or roof drainage piping shall discharge onto the ground and shall not be directly connected to the storm drainage system. Variation from this requirement may be requested and granted by the Town of Westfield Public Works Department in special circumstances. No downspouts or roof drains shall be connected to the sanitary sewers.
4. **Garage and Basement floor drains and water softener discharge** shall not be connected to the storm sewers.
5. **Swimming Pool drains** shall not be connected to the storm sewers unless the water is dechlorinated prior to being connected to the storm sewer.

501.07 Inspection and Rejection of Pipe

The quality of all materials, the process of manufacture, and the finished pipe shall be subject to inspection and approval by the Westfield Public Works Department or designee. Such inspection may be made at the place of manufacture or on the work after delivery, or at both places; and the pipe shall be subject to rejection at any time on account of failure to meet any of the specifications' requirements even though sample pipes may have been accepted as satisfactory at the place of manufacture.

Prior to being lowered into the trench, each pipe shall be carefully inspected and those not meeting the specifications shall be rejected and at once removed from the work.

The Westfield Public Works Department shall have the right to cut cores from such pieces of the concrete pipe as he desires for such inspection and tests as he may wish to apply. The Developer/Contractor shall pay for the samples of an Independent Laboratory Testing.

Holes left by the removal of cores shall be filled in an approved manner by and at the expense of the manufacturer of the pipe.

The Westfield Public Works Department shall also have the right to take samples of concrete after it has been mixed, or as it is being placed in the forms or molds, and to make such inspection and tests thereof as he may wish.

Any pipe which has been damaged after delivery will be rejected and replaced solely at the Contractor's expense.

501.08 Handling Pipe

Each pipe section shall be handled into its position in the trench only in such manner and by such means as the Westfield Public Works Department or designee approves as satisfactory. As far as practicable, the Contractor will be required to furnish slings, straps, and other approved devices to permit satisfactory support of all parts of the pipe when it is lifted.

501.09 Notice to Westfield Public Works Department

The Westfield Public Works Department or designee shall be notified when the pipes are to be laid in the trench. At least 15 feet of the pipe shall, under ordinary circumstances, be laid before covering begins.

All pipes shall be reinspected for soundness and damage due to handling immediately before being lowered into the trench. Any pipe found to be unsound or damaged will be rejected and shall be removed immediately from the site of the work.

No portion of a Storm Sewer pipe, open culvert, manhole, inlet, or subsurface tile system shall be installed directly or indirectly over or upon frozen ground or with frozen backfill materials.

Where ground water is encounter, the contractor shall make every effort necessary to secure a dry trench bottom prior to installation of the storm water system. The contractor shall be required to maintain the groundwater level below the base of the excavation. The Town, nor the Westfield Public Works Department, will not assume any liability for the actions of the Developer or Contractor in the performance of the required dewatering operation. If trench conditions outlined in this section cannot be achieved, the Westfield Public Works Department or designee may terminate installation until such efforts can be achieved.

All pipes shall be laid accurately to the required line and grade as shown on the drawings, and in the manner prescribed by the pipe manufacturer and appropriate ASTM Specifications, to form a close, concentric joint with the adjoining pipe and to bring the invert of each section to the required grade. The supporting of pipe on block will not be permitted.

Pipe lying shall precede upgrade, beginning at the lower end of the sewer.

Practically watertight work is required, and the Contractor shall construct the sewers with the type of joint specified.

Joints between precast structures shall be sealed with (1) An approved rubber gasket manufactured and installed in accordance with ASTM C 443, latest version, (2) A ½ inch diameter non-asphaltic mastic (Kent Seal or approved equal) conforming to AASHTO M-198 and Federal Specifications SS 521-A, or 4 (3) mortar or butyl rubber sealed on the outside and (4) mortar sealed on the inside and brushed smooth.

The annular space between the pipe and precast structure walls shall be filled inside and outside with a grout mixture composed of 2 parts of fine aggregate and one part of Portland Cement or Class "A" Concrete.

All pipes shall be laid to the line and grade as shown on the drawings. Variations from a uniform line and grade as shown on the drawings shall be cause for the line to be rejected.

The ends of the pipe shall be satisfactorily cleaned just before laying, and the joint shall be made in a satisfactory manner in accordance with the recommendations of the manufacturer on particular type of joint. All joint work shall be done by experienced workmen.

All pipes shall be bedded as described in this specification under Pipe Bedding. Bell holes shall be excavated in advance of pipe laying so the entire pipe barrel will bear uniformly on the prepared subgrade.

Each length of pipe shall be mechanically pulled "home" with a winch or cone-along against the section previously laid and held in place until the trench and bedding are prepared for the next pipe section. Care shall be taken in laying the pipe so not to damage the bell or the spigot end of the pipe. Mechanical means consisting of a cable placed inside the pipe with a winch, jack, or cone-along shall be considered to pull the pipe home where pushing the pipe will not result in a joint going completely home and staying in place.

The Contractor shall use laser beam equipment, surveying instruments, or other proven techniques to maintain accurate alignment and grade.

Open excavation shall be satisfactorily protected at all times. At the end of each day's work, the open ends of all pipes shall be protected against the entrance of animals, children, earth, or debris by bulkheads or stoppers. Bulkheads or stoppers shall be performed so the passage of water into the installed pipe line to prevent flotation of the pipe line. Any earth or other material that may find entrance into the main sewer or into any lateral sewer through any such open end of unplugged branch must be removed at the Contractor's expense. The cost of all such plugs, and the labor connected therewith, must be included in the regular bid for the sewers.

Storm sewer which outlets into a Hamilton County Regulated Drain shall be approved, inspected, and constructed per the latest standards of the Hamilton County Surveyor's Office Standards.

501.11 Pipe Bedding and Haunching

Each pipe section shall be laid in a firm foundation of bedding material and haunched and backfilled with care.

Prior to pipe installation, carefully bring bedding material to grade along the entire length of pipe to be installed. To provide adequate support for the pipe, the following bedding procedures are recommended.

When Angular 60 to 12 mm (1/4 to 1/2-inch) clean graded stone, slag, or crushed stone material is used for bedding, little or no compaction is necessary due to the nature of the angular particles. A depth of 4 to 6 inches is generally sufficient to provide uniform bedding. If Class 1 material is used for bedding, it must also be utilized for haunching up to or higher than the spring line of the pipe to avoid loss of side support through migration of Class II haunching material into the bedding.

1. Take care with coarse sands and gravels and maximum size 20 mm (3/4-inch) materials, to provide uniformly compacted bedding. Excavate the bedding material or place it to a point above the pipe bottom, determining such point by the depth of loose material resulting in the preparation of the bedding and the amount of compaction that will be required to bring the material to grade. Use hand or mechanical tamping to compact the bedding material to a minimum 85% Standard Proctor Density.
2. Slightly damp material will generally result in maximum compaction with a minimum of effort. If water is added to improve compaction or if water exists in the trench, take care to avoid saturation of Class II material, which could result in additional stability problems. Check grade of bedding after compaction.

Bedding material shall have a minimum thickness beneath the pipe of 4 inches (100 mm) or one-eighth of the outside diameter of the pipe, whichever is greater, and shall extend up the sides of the pipe one-sixth of the outside diameter of the pipe.

The rigid pipe, such as concrete or ductile iron, backfill between the bedding material and a plane 12 inches (300 mm) over the top of the pipe shall be hand-placed finely divided earth, free from debris and stones, or granular backfill if required.

For flexible pipe, corrugated metal pipe, the placement of embedment material or haunching around the pipe must be done with care. The ability of the pipe to withstand loading in a trench depends a large part on the method employed in its installation. If crushed stone, pea gravel, or graded gravel or sand is used to backfill between the bedding material and a plane 12 inches (300 mm) over the top of the pipe, it shall be hand placed. If fine sand, silt, or clayey gravels are used for initial backfilling over the pipe, the material shall be hand placed in 6- to 8-inch layers and hand compacted on both sides of the pipe to an elevation 12 inches (300 mm) over the top of the pipe. Care should be taken so not to compact directly over the pipe.

501.12 Concrete Cradle (Class "A" Bedding)

Concrete cradles shall be constructed of Class "B" concrete and of the design shown on the detailed drawings.

501.13 Manholes and Other Structures

Manholes and other structures are to be constructed at locations shown on the drawings and in accordance with the following specifications:

Precast concrete manhole sections shall conform to ASTM Designation C478, except as modified herein:

1. The joint design of the precast sections shall consist of a bell or groove on one end of the unit of pipe and a spigot or tongue on the adjacent end of the joining section.
2. The joint shall consist of a flat rubber gasket attached to the spigot end of the precast manhole section and shall conform to Sections 6.1.6, 6.1.7 and 9 of ASTM Designation 443, latest revision.

Openings in manhole sections for sewer connections shall be cut at the point of manufacture and shall be circular or horseshoe shaped with grooved or roughened surfaces to improve mortar bond.

Manhole bases shall be cast-in-place concrete, reinforced as shown on the Standard Detail Sheet. Manhole bases shall be cast on a minimum of 6 inches of compacted crushed stone.

Manhole channels or inverts (flow lines) shall be preformed and poured with Class "B" concrete to the spring line of the connecting pipe. The finished invert shall be a semi-circular shaped smooth channel directing the flow to the downstream sewer.

Manhole frames and lids shall be of good quality cast iron, conforming to ASTM Designation A48 and as shown on Detail #2 on the Standard Detail Sheet (See Section 2-11 C-1). Unless specifically designated otherwise, manhole castings shall be the non-locking type. The joint between the casting frame and cone section shall be fully mortared or gasketed and coated with butyl rubber or a coal tar epoxy coating upon reaching its final set to become a watertight joint.

Manhole steps shall be made from a steel reinforcing rod encapsulated in a copolymer polypropylene resin. Steps shall be placed as shown on the drawings.

In yielding subsoils, the trench bottom shall be undercut to the depth necessary and backfilled with graded, crushed stone to form a firm foundation.

Where excavation occurs in rock or hard shale, the trench bottom shall be undercut and a minimum of 6 inches (150 mm) crushed stone bedding placed prior to pipe installation.

TABLE 501-1

Typical Values of Manning's "n"

Material	*Manning's "n"*	*Maximum Velocities (feet/second)*
Closed Conduits		
Concrete	0.013	10
Vitrified Clay	0.013	10
HDPE	0.012	10
PVC	0.011	10
Circular CMP, Annular Corrugations, 2 2/3 x ½ inch		
Unpaved	0.024	7
25% Paved	0.021	7
50% Paved	0.018	7
100% Paved	0.013	7
Concrete Culverts	0.013	10
HDPE or PVC	0.012	10
Open Channels		
Concrete, Trowel Finish	0.013	10
Concrete, Broom Finish	0.015	10
Gunite	0.018	10
Riprap Placed	0.030	10
Riprap Dumped	0.035	10
Gabion	0.028	10
New Earth (1)	0.025	4
Existing Earth (2)	0.030	4
Dense Growth of Weeds	0.040	4
Dense Weeds and Brush	0.040	4
Swale with Grass	0.035	4

Source of manning "n" values: HEC/FCC Stormwater Drainage Manual, July 1995.
(1) New earth (uniform, seeded, clay soil).
(2) Existing earth (fairly uniform, with some weeds).

TABLE 501-2

Maximum Distance Between Manholes	
Size of Pipe (Inches)	**Maximum Distance (Feet)**
All sizes	400

BY	REVISIONS	MARK	DATE

JAMES O. RINEHART IV
REGISTERED
No. 10200495
STATE OF INDIANA
PROFESSIONAL ENGINEER

THIS DRAWING IS NOT INTENDED TO BE REPRESENTED AS A RETRACEMENT OR ORIGINAL BOUNDARY SURVEY. A ROUTE SURVEY MAP IN SURVEYOR LOCATION REPORT.

CERTIFIED: 1/27/11

STOEPPELWERTH & ASSOCIATES, INC.
CONSULTING ENGINEERS & LAND SURVEYORS
7965 East 106th Street, Fishers, IN 46038-2505
Phone: (317) 849-5935 Fax: (317) 849-5942
Toll Free: (800) 728-6917

STOEPPELWERTH & ASSOCIATES, INC.

CONSTRUCTION SPECIFICATIONS

STORAMERICA

HAMILTON COUNTY, INDIANA

WESTFIELD

DRAWN BY: KRG
CHECKED BY: BKR

SHEET NO.
C804

S & A JOB NO.
59815RAD

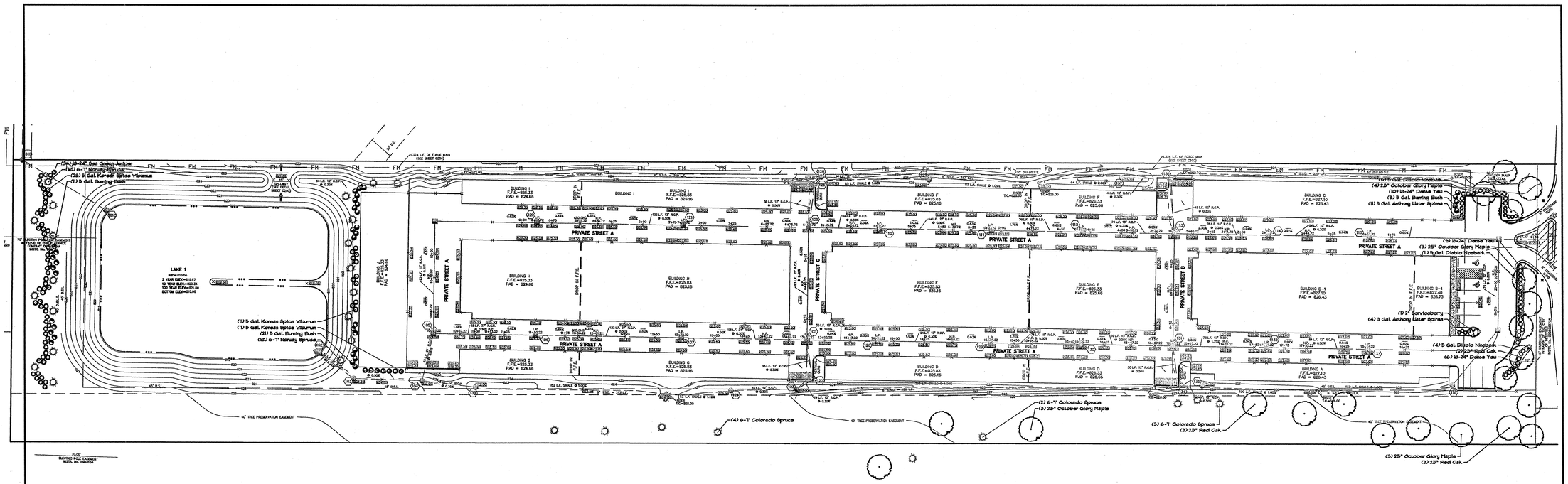

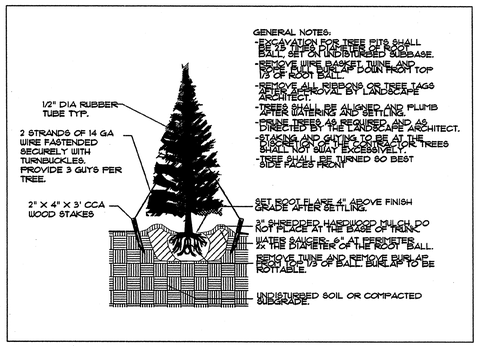

Evergreen Tree Planting N.T.S.

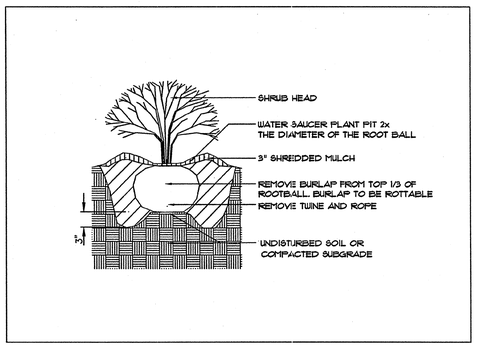

Shrub Planting N.T.S.

Plant List

Common Name	Scientific Name	Quantity	Size
Canopy Trees			
October Glory Maple	Acer rubrum 'October Glory'	13	2.5"
Serviceberry	Amelanchier grandiflora	1	2"
Red Oak	Quercus rubra	8	2.5"
Evergreen Trees			
Norway Spruce	Picea abies	20	6-7'
Colorado Spruce	Picea pungens glauca	9	6-7'
Shrubs			
Burning Bush	Euonymus alatus 'Compactum'	37	5 Gal.
Sea Green Juniper	Juniperus chinensis 'Sea Green'	34	18-24"
Diablo Ninebark	Physocarpus opulifolius 'Monlo'	20	5 Gal.
Anthony Water Spirea	Spirea bumalda 'Anthony Waterer'	15	3 Gal.
Dense Yew	Taxus media 'Densiformis'	25	18-24"
Koreanspice Viburnum	Viburnum carlesii	46	5 Gal.

General Construction Notes

1. EXISTING SITE INFORMATION SUPPLIED BY STOEPPELWERTH AND ASSOC. FISHERS, IN 46038. ALL QUANTITIES AND DESIGN BASED UPON SAME.
2. BEFORE ANY EXCAVATION ON THE SITE, CALL FOR A LOCATE ON ANY EXISTING UTILITIES ON THE SITE. THE CONTRACTOR SHALL FAMILIARIZE HIMSELF/HERSELF WITH THE LOCATIONS OF ALL BURIED UTILITIES IN THE AREAS OF WORK BEFORE STARTING OPERATIONS. THE CONTRACTOR SHALL BE LIABLE FOR COST OF REPAIRING OR REPLACING ANY BURIED CONDUITS, CABLES OR PIPING DAMAGED DURING THE INSTALLATION OF THIS WORK.
3. PROTECT STRUCTURES, UTILITIES, SIDEWALKS, PAVEMENTS AND OTHER UTILITIES TO REMAIN FROM DAMAGE CAUSED BY SETTLEMENT, LATERAL MOVEMENT, UNDERMINING, WASHOUTS AND OTHER HAZARDS CREATED BY SITE IMPROVEMENT OPERATIONS.
4. CAREFULLY MAINTAIN PRESENT GRADE AT BASE OF ALL EXISTING TREES TO REMAIN. PREVENT ANY DISTURBANCE OF EXISTING TREES. USE TREE PROTECTION BARRICADES WHERE INDICATED. PROTECT EXISTING TREES TO REMAIN IN PLACE AGAINST UNNECESSARY CUTTING, BREAKING OR SKINNING OF ROOTS, BRUISING OF BARK, SMOTHERING OF TREES BY STOCKPILING EXCAVATION AND CONSTRUCTION MATERIALS WITHIN THE DRIP LINE.
5. THE CONTRACTOR AT ALL TIMES SHALL KEEP THE PREMISES ON WHICH THE WORK IS BEING DONE, CLEAR OF RUBBISH AND DEBRIS.
6. ALL WORK AND OPERATIONS SHALL COMPLY WITH ALL APPLICABLE FEDERAL, STATE, AND LOCAL CODES AND ORDINANCES.
7. LAYOUT OF ALL NEW PATHWAYS, CURBS AND WALLS SHALL BE SMOOTH AND CONTINUOUS. KINKY ALIGNMENT OR ABRUPT CHANGES WILL NOT BE ACCEPTED. LANDSCAPE ARCHITECT WILL REVIEW STAKED-OUT LAYOUT AND FORMWORK BEFORE CONSTRUCTION CONTINUES.

Planting Notes

1. PLANT LOCATIONS SHALL BE STAKED BY THE CONTRACTOR AND REVIEWED BY THE LANDSCAPE ARCHITECT BEFORE PLANTING OPERATIONS COMMENCE. ADJUST AS REQUESTED TO AVOID UTILITY CONFLICTS.
2. NOTE THAT PLANT LIST QUANTITIES ARE FOR THE CONTRACTOR'S CONVENIENCE ONLY. CONTRACTOR SHALL VERIFY ALL QUANTITIES PRIOR TO SUBMITTING THEIR BID FOR THIS PROJECT.
3. ALL PLANT MATERIAL SHALL CONFORM TO ANSI Z60.1 STANDARDS. LANDSCAPE ARCHITECT PRESERVES THE RIGHT TO REJECT ANY PLANT MATERIAL NOT MEETING INDUSTRY STANDARDS.
4. PLANTING BEDS SHALL RECEIVE A 3" LAYER OF SHREDDED BARK MULCH.
5. SEED AND STRAW MULCH ALL LAWN AREAS DISTURBED DURING CONSTRUCTION, UNLESS NOTED OTHERWISE.
6. ALL PLANT MATERIAL TO BE 24" HEIGHT AT PLANTING AND BE MAINTAINED AT A MINIMUM OF 36" HEIGHT.

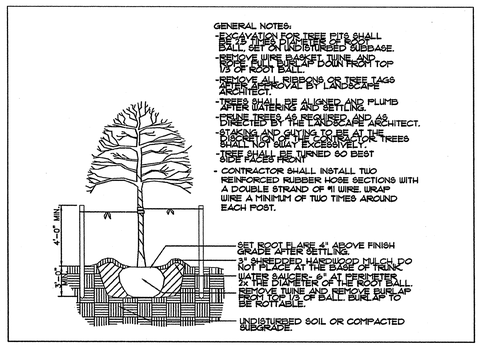

Deciduous Tree Planting N.T.S.

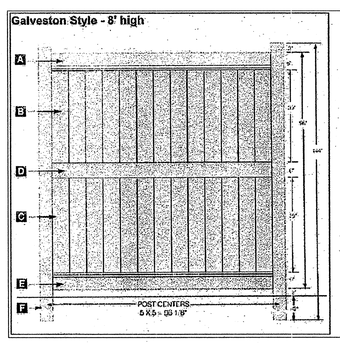

Component	Detail
Top Rail (A)	2" x 6" x 94-1/2" Classic Curve Deco Rail Ribbed, extruded with channel to accept pickets, includes reinforcing channel
Picket Spacing (B)	None
Pickets (C)	26 pieces of 7/8" x7" x 42-1/4" Tongue & Groove
Mid Rail (D)	2" x 6" x 94-1/2" Ribbed, channeled to accept pickets, includes reinforcing channel
Bottom Rail (E)	2" x 6" x 94-1/2" Classic Curve Deco Rail Ribbed, extruded with channel to accept pickets, includes reinforcing channel
Steel reinforcement	Yes, channel located in all rails.
Aluminum reinforcement	No
Post (in-ground) (F)	6" x 5" x 144"
Post Spacing (center to center)	06-1/8"
Color(s)	Tan (add 10% for Tan)
Standard Walk Gate Actual Width	50-1/2"
Standard Walk Gate Opening Size	Add 1-3/4" distance between gate posts (allows for hardware)
Standard Walk Gate Hardware	self-closing hinges, self-latching latches
Standard Double Gate Actual Width	100"
Standard Double Gate Hardware	add drop pin kit
Misc.	External caps include screws, washers, & snap caps

Fence Detail N.T.S.

LANDSCAPING

REAL AMERICA DEVELOPMENT

CARMEL, IN

STORAMERICA

LANDSCAPE PLAN

DATE	REVISIONS

SCALE	1"= 40'-0"
DATE	2/27/11
PROJECT NO.	
DRAWN BY	MB
CHECKED BY	NH

SHEET NO.

C-900

NORTH

SCALE IN FEET

0 20 40 80 120 200

S:\SBM\DRAWings\2009\Landscape Plan.dwg, Layout1, 3/1/2011 1:12:13 PM, KStiles, 1:1

GREENBRIAR® - FLAT LENS (Various reflectors are protected by U.S. Patent No. 6,464,378.)

Shown with optional decal striping

Flat-lensed fixtures meet IESNA full cutoff classification

DIMENSIONS

Arm Mount — Bracket – 2-bolt Pattern — Pole Top Mount — 12" (305mm)

	A	B	C
GFM Arm Mount	21-5/8"(549mm)	12-3/4"(324mm)	—
GFPM Pole Top	21-5/8"(549mm)	12-3/4"(324mm)	21-15/16"(557mm)
GFR Arm Mount	21-5/8"(549mm)	16-1/8"(410mm)	—
GFPR Pole Top	21-5/8"(549mm)	16-1/8"(410mm)	25"(635mm)

LUMINAIRE EPA CHART - Greenbriar Flat Lens

	GFM 12' Bracket	GFR 12' Bracket
Single	3.2	3.8
D180°	6.3	7.6
D90°	5.7	7.6
T90°	8.8	11.4
TN120°	9.0	11.4
Q90°	11.3	15.2
Pole Top	3.2	4.0

Note: House Side Shield adds to fixture EPA. Consult factory.

SHIPPING WEIGHTS - Greenbriar Flat Lens

Catalog Number	Est. Weight (kg/lbs.)	Length (mm/in.)	Width (mm/in.)	Height (mm/in.)
GFM	19/41	635/25	635/25	495/19.5
GFPM	24/53	730/28.75	724/28.5	635/25
GFR	26/57	724/28.5	711/28	648/25.5
GFPR	29/64	724/28.5	724/28.5	737/29

HOUSING - The aluminum housing is available in two sizes. Both housings are the same dimensions square, however, the GFR is deeper. Both are finished to produce a clean, sharp appearance, and designed to ensure weather-tight construction. Top-access covers provide ease of installation and servicing.

LENS/GASKET - The flat clear tempered glass lens is sealed to the housing with an EPDM gasket, preventing entry of moisture, dust and insects.

TOP COVER FASTENERS - The four captive stainless steel fasteners secure the top-access cover to the housing.

SOCKETS - Porcelain mogul-base sockets. All sockets are pulse-rated.

LIGHT SOURCES - Pulse-Start Metal Halide, Natural White Pulse-Start Metal Halide, Metal Halide Reduced Envelope, or High Pressure Sodium. Clear lamp is supplied as standard.

BALLASTS - Pulse-Start Metal Halide (200, 250, 320, 400, 750 and 1000 watt), 775 watt Natural White Pulse-Start Metal Halide, Metal Halide, and High Pressure Sodium fixtures feature a high-power factor type CWA ballast. The 575 watt Natural White Pulse-Start Metal Halide fixtures feature HX-HPF type ballasts. All ballasts are designed for -20° F operation.

REFLECTORS/DISTRIBUTION PATTERNS - The series is available in a variety of reflector systems and distribution patterns, all with vertical oriented lamps: GFR: Type II (2), Type III (3), Perimeter Forward Throw (FP), Type V (5), Automotive Forward Throw (FA), as well as, ART (Advanced Reflector Technology) optical systems: Automotive Forward Throw (AFT), Automotive Interior (AI), and a high performance Type V (540) for 38' - 42' mounting heights.
GFM: Type II (2), Type III (3), Perimeter Forward Throw (FP), and Type V (5).

All reflectors are field-rotatable, enabling generous flexibility in distribution patterns without moving the fixture. Photometric data is tested in accordance with IESNA guidelines.

BRACKETS - Arm Mount: 2-1/2" x 5-3/8" x 12" extruded aluminum bracket is shipped standard. An 8" bracket is available for single or D180° configurations, but must be ordered from the Options column of the ordering chart. A Round Pole Plate (RPP2) is required for mounting to 3"–5" round poles. (See Accessory Ordering Information chart.)
Pole Top: The cast aluminum mounting hub conceals the wiring compartment and mounts directly to LSI's unique "pole-top mounting plate", via a high-strength grade five steel bolt with nylon insert and split lock washer for double locking. Support arms consist of four 11/16" O.D. aluminum rods and are pre-wired for ease of installation.

FINISHES - Each fixture is finished with LSI's DuraGrip® polyester powder coat finishing process. The DuraGrip finish withstands extreme weather changes without cracking or peeling, and is guaranteed for five full years. Standard colors include bronze, black, platinum plus, buff, white, satin verde green, metallic silver, and graphite.

DECAL STRIPING - LSI offers optional color-coordinated decals in 9 standard colors to accent the fixture. Decal is guaranteed for five years against peeling, cracking, or fading.

PHOTOMETRICS - Please visit our web site at www.lsi-industries.com for detailed photometric data.

c UL us LISTED wet location

11/12/10
© 2010
LSI INDUSTRIES INC.
Project Name ______ Fixture Type ______
Catalog # ______

GREENBRIAR® - FLAT LENS

LUMINAIRE ORDERING INFORMATION

TYPICAL ORDER EXAMPLE: GFR 5 1000 PSMV F MT PLP 8BK 20

Luminaire Prefix	Distribution	Lamp Wattage	Light Source	Lens	Line Voltage	Luminaire Finish	Options
Medium Vertical Burn GFM - Arm Mount GFPM - Pole Top [1]	2 – Type II 3 – Type III FP – Perimeter Forward Throw 5 – Type V	200 250 320 400	PSMV – Pulse-Start Metal Halide 200, 250, 320 Watt PSMVR – Pulse-Start Metal Halide Reduced Envelope 400 Watt HPS – High Pressure Sodium 250, 400 Watt	F – Flat Clear Tempered Glass	480 MT – Multi Tap TT – Tri-Tap	BRZ – Bronze BLK – Black PLP – Platinum Plus BUF – Buff WHT – White SVG - Satin Verde Green GPT - Graphite MSV - Metallic Silver	8BK – 8' Bracket [3] PCI120 – Button-Type Photoelectric Control [4] PCI208 – Button-Type Photoelectric Control [4] PCI240 – Button-Type Photoelectric Control [4] PCI277 – Button-Type Photoelectric Control [4] PCI347 – Button-Type Photoelectric Control [4] IL – Internal Louver [5] LL – Less Lamp
Reduced Vertical Burn GFR - Arm Mount GFPR - Pole Top [1]	2 – Type II 3 – Type III FP – Perimeter Forward Throw FA - Automotive Forward Throw 5 – Type V	400 575 750 775 1000	PSMV – Pulse-Start Metal Halide 400, 750, 1000 [2] Watt NWPSMV – Pulse-Start Metal Halide Natural White 575, 775 Watt MHR - Metal Halide Reduced Envelope 1000 Watt		MT – Multi Tap consists of 120V, 208V, 240V and 277V and is prepared for highest voltage. Alternate voltages will require field adjustment. TT – Tri-Tap consists of 120V, 277V and 347V and is shipped standard for Canadian applications and is prepared for highest voltage. Alternate voltages will require field adjustment.		Color Decals 45 – Light Gold 20 – Charcoal Metallic 55 – Black 94 – Blue Metallic 59 – Dark Green 51 – Dark Red 21 – Tomato Red 50 – White 700 – Aztec Silver Metallic
	Advanced Reflector Technology Optical Systems: AFT – Automotive Forward Throw AI – Automotive Interior	575 750 775 1000	PSMV – Pulse-Start Metal Halide 750, 1000 [2] Watt NWPSMV – Pulse-Start Metal Halide Natural White 575, 775 Watt MHR - Metal Halide Reduced Envelope 1000 Watt		Consult Factory for International Voltages and Light Sources		
	540 – Type V (38'-42' Mtg. Ht.)	750 775 1000	PSMV – Pulse-Start Metal Halide 750, 1000 [2] Watt NWPSMV – Pulse-Start Metal Halide Natural White 775 Watt MHR - Metal Halide Reduced Envelope 1000 Watt				

FOOTNOTES:
1- When ordering pole top fixtures for tenon mounting, a pole top adaptor must be ordered.
2- Tri-Tap not available in 1000 Watt PSMV. Voltage must be specified - 120V, 277V or 347V.
3- An 8' bracket can only be ordered with single and D180° configurations.
4- On GFR/GFPR photoelectric control can only be used with 400 Watt PSMV.
5- Available with GFR AFT reflector only. Can be ordered as an accessory, use Order #288116BLK.

ACCESSORY ORDERING INFORMATION (Accessories are field installed)

Description	Order Number	Description	Order Number
FK120 - Single Fusing	FK120+	GFR/GFM 2 HSS – House Side Shield	4342901++
FK277 - Single Fusing	FK277+	GFPR/GFPM 2 HSS – House Side Shield	4342901++
DFK208, 240 - Double Fusing	DFK208, 240+	GFR/GFM 3 HSS – House Side Shield	4342902++
DFK480 - Double Fusing	DFK480+	GFPR/GFPM 3 HSS – House Side Shield	4342902++
FK347 - Single Fusing	FK347+	GFR/GFM FP HSS – House Side Shield	4342902++
RPP2 – Round Pole Plate	102914BLK++	GFPR/GFPM FP HSS – House Side Shield	4342902++
9KS-00-WM-*-CLR Wall Mount Plate	123111CLR	GFR/GFPR FA/AFT HSS – House Side Shield	4342902++
		GFR/GFPR AFT IL – Internal Louver	288116BLK++

+Fusing must be located in the hand-hole of the pole on GFR/GFPR Series - not in the fixture. ++ Black only.

HOUSE SIDE SHIELD

TYPE II (4342901) — 4-5/16" (110mm) — 2-5/16" (59mm)
TYPE III AND FORWARD THROW (FA/FP/AFT) (4342902) — 5-3/8" (137mm) — 8-7/8" (225mm)
GFR WITH INTERNAL HOUSE SIDE SHIELD (288116BLK) (AFT reflector only)
BOTTOM VIEW — 5-3/8" (137mm)

04/09/10
© 2010
LSI INDUSTRIES INC.
Project Name ______ Fixture Type ______
Catalog # ______

GREENBRIAR® WALL SCONCE (Various reflectors are protected by U.S. Patent No. 6,464,378)

Shown with optional decal striping

Flat-lensed fixtures meet IESNA full cutoff classification

DIMENSIONS

30° — (70mm) 2-3/4" — (25mm) 1" — (95mm) 3-3/4" — Junction Box Centerline

	A	B	C	D
Small	(448mm) 17-5/8"	(244mm) 9-5/8"	(257mm) 10-1/8"	(137mm) 5-3/8"
Medium	(508mm) 20"	(341mm) 13-7/16"	(283mm) 11-5/32"	(218mm) 8-5/8"

(145mm) 5-45/64" — (197mm) 7-3/4" — Universal Mounting Plate

SHIPPING WEIGHTS - Greenbriar Wall Sconce

Catalog Number	Est. Weight (kg/lbs.)	Length (mm/in.)	Width (mm/in.)	Height (mm/in.)
GBWS-HID	10 / 22	616 / 24.25	394 / 15.5	343 / 13.5
GBWM-HID	15 / 32	616 / 24.25	394 / 15.5	419 / 16.5
GBWS-CFL	8 / 17	616 / 24.25	394 / 15.5	343 / 13.5
GBWM-CFL	11 / 24	616 / 24.25	394 / 15.5	419 / 16.5

c UL us LISTED wet location (Downlight only) damp location (Uplight - covered locations only)

HOUSING - The aluminum housing is available in two sizes and is a rectangular shape. All mounting hardware is stainless steel or electro-zinc plated steel.

WALL MOUNT - A galvanized-steel universal wall mounting plate easily mounts directly to a 4" octagonal or square junction box. An EPDM gasket is supplied to be installed between the mounting plate and junction box, sealing the junction box from entrance of water. The galvanized-steel universal plate allows the fixture to securely attach to the mounting plate using a unique clamping design which is locked into place with two hex-head screws. The universal plate permits the fixture to be mounted in the uplighting position (listed for damp locations) or downlighting position (listed for wet locations).

DOOR FRAME - The aluminum door frame with two stainless steel captive fasteners allows easy access into the fixture. A one piece extruded silicone gasket seals the door frame against the housing. The door swings open and is held in place by a retainer.

LENS/GASKET - A flat clear tempered glass lens, which is sealed to the door frame with EPDM gasketing, is standard. An optional polycarbonate lens is available on most Compact Fluorescent fixtures.

BALLASTS/ELECTRICAL COMPONENTS - Electrical components are factory-mounted in housing and prewired with voltage specific leads which extend out the back of the unit through a rubber grommet. This grommet prevents the entry of insects, dust, and moisture into the fixture. The need to open the fixture to make wiring connections is eliminated, thus making installation quick and easy. UL listed HID components with high-power factor ballasts rated for -20°F starting. Compact Fluorescent ballasts are Electronic Universal Voltage (120-277V 50/60 Hz) or 347V (60 HZ), 0°F starting. Compact Fluorescent fixtures with UE (Universal Electronic) voltage are available with an optional dimming ballast for multiple types of controls such as building lighting controls and occupancy sensors. Available battery back-up of BB (32° starting temperature) and CWBB (0° starting temperature) are 120 or 277 voltage for U.S. applications for 26 watt through 70 watt lamps. Consult factory for available wattages and voltages for use in Canada.

SOCKETS - HID lampholders are glazed porcelain, medium base for the small fixture and mogul base for the medium fixture, 4KV pulse rated. The Compact Fluorescent fixtures feature a one-piece thermoplastic socket.

LIGHT SOURCES - The fixture is designed to operate with horizontal Pulse-Start Metal Halide, Pulse-Start Metal Halide Reduced, Ceramic Metal Halide, Metal Halide, High Pressure Sodium, and single, double or triple Compact Fluorescent lamps. Lamps supplied as standard – HID (clear, shipped installed), and Compact Fluorescent (coated, 4100K).

EMERGENCY OPERATION - A variety of integral emergency options are available to comply with Life Safety Codes which require emergency lighting along the path of egress on the building's exterior, so building occupants can exit safely. Integral Emergency Battery Back-up options are available on Compact Fluorescent units. Emergency Quartz options are offered on HID units. Options for one or two 12 volt separate circuit(s), for use with up to 35 watt Halogen lamp(s) are available on both Compact Fluorescent and HID units.

REFLECTORS/DISTRIBUTION PATTERNS - Forward Throw (FTM, FT) and Type III (3) reflectors are available on small and medium. Wall Wash (WW) reflectors are also available on small. All are high performance, full cut-off distribution as defined by the IESNA (downlight position only). Photometric data is tested in accordance with IESNA guidelines.

FINISHES - Each fixture is finished with LSI's DuraGrip® polyester powder coat finishing process. The DuraGrip finish withstands extreme weather changes without cracking or peeling, and is guaranteed for five full years. Standard colors include bronze, black, platinum plus, buff, white, satin verde green, metallic silver, and graphite.

DECAL STRIPING - LSI offers optional color-coordinated decals in 9 standard colors to accent the fixture. Decals are guaranteed for five years against peeling, cracking, or fading.

PHOTOMETRICS - Please visit our web site at www.lsi-industries.com for detailed photometric data.

04/09/10
© 2010
LSI INDUSTRIES INC.
Project Name Westfield Self Storage Fixture Type ______
Catalog # GBWS * 150 CMH F

GREENBRIAR® WALL SCONCE

LUMINAIRE ORDERING INFORMATION

TYPICAL ORDER EXAMPLE: GBWM 3 400 PSMHR F 120 BRZ SQT

Luminaire Prefix	Distribution	Lamp Wattage	Light Source	Lens	Line Voltage	Luminaire Finish	Options
GBWS (Small)	3 - Type III FT - Forward Throw WW - Wall Wash	50 70 100 150	CMH - Ceramic Metal Halide 150 Watt[1] MH - Metal Halide 50, 70, 100[2], 150[1] Watt HPS - High Pressure Sodium 50[3], 70, 100, 150 Watt	F- Flat Clear Tempered Glass	120 208 240 277 347	BRZ - Bronze BLK - Black PLP - Platinum Plus BUF - Buff WHT - White SVG - Satin Verde Green GPT - Graphite MSV - Metallic Silver	PCI120 - Button-Type Photocell PCI208 - Button-Type Photocell PCI240 - Button-Type Photocell PCI277 - Button Type-Photocell PCI347 - Button Type-Photocell TP - Tamper Proof [7] PMA - Pole Mount Adaptor for use with square poles (for S or D180 mounting configurations only) Not compatible with EM1, EM2, EO or EO2 options PMAR - Pole Mount Adaptor for use with round poles (for S or D180 mounting configurations only) Not compatible with EM1, EM2, EO or EO2 options DIM - CFL Control Voltage Dimming Ballast [8] C - Coated MH or PSMH Lamp (except 250 PSMH) SQT - Standby Quartz (Time Delay) [9] SQN - Standby Quartz (Non-Time Delay) [9] EQ - Emergency Quartz (separate 120V circuit - HID only) [9] EQ2 - Two Emergency Quartz (2 separate 120V circuits - HID only) [10] BB - CFL Battery Back-up [11] CWBB - Cold Weather Battery Back-up [11] EM1 - One Emergency 12V Circuit Provision with 35 Watt Halogen Lamp [12] EM1LL - One Emergency 12V Circuit Provision - Less Halogen Lamp [12] EM2 - Two Emergency 12V Circuit Provisions with (2) 35 Watt Halogen Lamps [12] EM2LL - Two Emergency 12V Circuit Provisions - Less Halogen Lamps [12] LL - Less Lamp
	FTM - Forward Throw Medium	26 32 42	CFL - Compact Fluorescent Single 26, 32, 42 Watt CFL2 - Compact Fluorescent Double 26, 32, 42 Watt	F- Flat Clear Tempered Glass FPC - Flat Clear Polycarbonate [4]	UE - Universal Electronic (120-277V 50/60Hz) 347 [6]		
	WW - Wall Wash		CFL - Compact Fluorescent Single 26, 32, 42 Watt				
GBWM (Medium)	3 - Type III FT - Forward Throw	250 320 400	PSMH - Pulse Start Metal Halide 250, 320 Watt PSMHR - Pulse Start Metal Halide Reduced 400 Watt HPS - High Pressure Sodium 250, 400 Watt	F- Flat Clear Tempered Glass	120 208 240 277 347 480		
		26 32 42 57 70	CFL - Compact Fluorescent Single 57, 70 Watt CFL2 - Compact Fluorescent Double 57, 70 Watt CFL3 - Compact Fluorescent Triple 26, 32, 42 Watt	F- Flat Clear Tempered Glass FPC - Flat Clear Polycarbonate [4,5]	UE - Universal Electronic (120-277V 50/60Hz) 347 [6] Consult Factory for International Voltages and Light Sources		Color Decals 45 - Light Gold Metallic 20 - Charcoal Metallic 94 - Blue Metallic 59 - Dark Green 21 - Tomato Red 55 - Black 50 - White 51 - Dark Red 700 - Aztec Silver Metallic

FOOTNOTES:
1- 150 MH must be used for downlight only
2- Supplied with a HX-HPF transformer as standard. Also available with a 120/277 volt CWA transformer. Consult factory.
3- 50 Watt HPS is not available in TT or 347V.
4- FPC lens is not available with EM options.
5- If a polycarbonate lens is required on an Uplight Medium fixture in 70 CFL2 or 42 CFL3, the glass lens with Polycarbonate Shield (CHWM PLS) accessory must be ordered.
6- 347V CFL is not available with dimming ballast (DIM) option. Consult factory for battery back-up (BB) options.
7- Tamper-proof Screwdriver must be ordered separately. (See Accessory Ordering Information)
8- CFL Dimming Control by others.
9- HID lamp wattages 50 and 70 are supplied with a 50 watt, 120V quartz lamp. HID lamp wattages 100 through 250 are supplied with a 100 watt, 120V quartz lamp. HID lamp wattages of 320 & 400 are supplied with a 250 watt, 120V quartz lamp. EQ option is not compatible with PMA or PMAR options.
10- Available on 100 watt minimum HID fixtures. HID lamp wattages 100 through 175 are supplied with two 50 watt, 120V quartz lamps. 250 through 400 watt HID fixtures are supplied with two 100 watt, 120V quartz lamps. EQ2 option is not compatible with PMA or PMAR options.
11- Battery Back-up available on single, double and triple 120 or 277 voltage specific units for U.S. applications. Please change Line Voltage of UE to 120 or 277 when ordering this option. On double and triple units, one lamp will be energized by Battery Back-up (BB) option. Consult factory for specific Means of Egress job application compliance.
12- Utilizes GY6.35 socket(s). 12 volt separate circuit(s) required. Not compatible with PMA or PMAR option or FPC lens.

ACCESSORY ORDERING INFORMATION (Accessories are field installed)

Description	Order Number	Description	Order Number
FK120 - Single Fusing	FK120+	GBWS PLS - Polycarbonate Shield for Small	172786
FK277 - Single Fusing	FK277+	GBWM PLS - Polycarbonate Shield for Medium	172787
DFK208, 240 - Double Fusing	DFK208, 240+	SW BLK - Surface Wiring Box	173156BLK+++
DFK480 - Double Fusing	DFK480++	SCD - Tamper-proof Screwdriver	36449
FK347 - Single Fusing	FK347+		

+ Available on HID fixtures only. Fusing to be installed in a compatible junction box supplied by contractor.
++ Available on HID Medium fixture only. Fusing to be installed in a compatible junction box supplied by contractor.
+++SW BLK not compatible with PMA or PMAR option.

04/09/10
© 2010
LSI INDUSTRIES INC.
Project Name Westfield Self Storage Fixture Type ______
Catalog # GBWS * 150 CMH F

Luminaire Schedule

Symbol	Qty	Label	Arrangement	Total Lamp Lumens	LLF	Description
	17	WM4	WALL MOUNT	13000	0.840	GBWS-FT-150-CMH-F (MH=8')
	54	WM3	WALL MOUNT	13000	0.840	GBWS-3-150-CMH-F (MH=8')
	1	S2-HSS	SINGLE	44000	0.840	GFM-2-400-PSMVR-F-HSS (MH=25')
	10	WM3-2	WALL MOUNT	13000	0.840	GBWS-3-150-CMH-F (MH=17')

Calculation Summary

Label	CalcType	Units	Avg	Max	Min	Avg/Min	Max/Min
Fron Parking Area	Illuminance	Fc	2.17	7.6	0.3	7.23	25.33
Paved Drive Areas	Illuminance	Fc	5.59	26.7	0.5	11.18	53.40

Based on the information provided, all dimensions and luminaire locations shown represent recommended positions. The engineer and/or architect must determine applicability of the layout to existing or future field conditions.

This lighting pattern represents illumination levels calculated from laboratory data taken under controlled conditions in accordance with Illuminating Engineering Society approved methods. Actual performance of any manufacturer's luminaire may vary due to variation in electrical voltage, tolerance in lamps, and other variable field conditions.

CBMC LIGHTING DISTRIBUTION
5855 KOPETSKY DRIVE SUITE G
INDIANAPOLIS IN 46217
Tel. 317-780-8350 Fax. 317-780-8355
info@cbmcinc.com

LIGHTING LAYOUT FOR
Self-Storage - Westfield

SCALE: 1" = 40'

STARTING DATE 1-26-11 BY: SJM

drawing#
C901

SPECIFIC NOTES:

4.01	BRICK VENEER
4.02	STONE VENEER OR EIFS (T.B.D.)
4.03	CONCRETE BLOCK
7.01	TEX–COTE
7.02	STANDING SEAM METAL ROOF
8.01	FIXED GLASS WINDOW
8.02	METAL OVERHEAD DOOR
8.03	FULL GLASS PASSAGE DOOR
8.04	SOLID PASSAGE DOOR

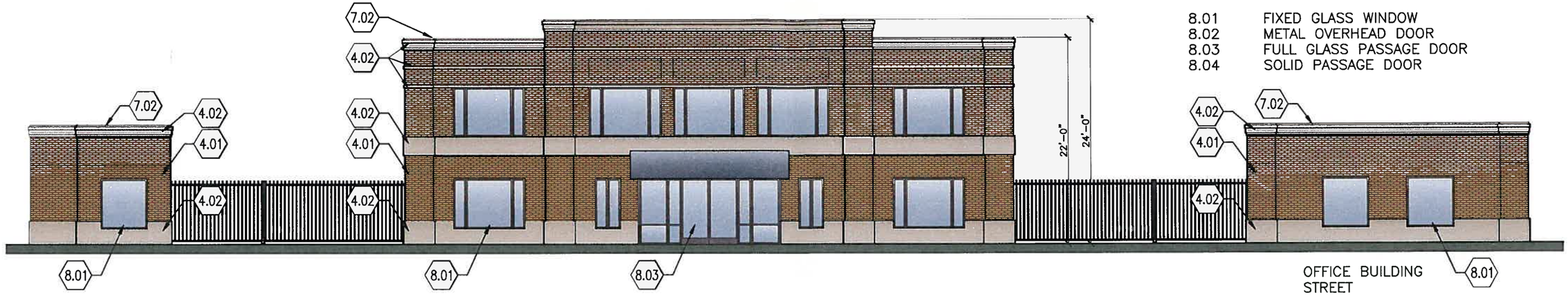

OFFICE BUILDING
STREET

ELEVATION

3/32"=1' 10'–8" 16'

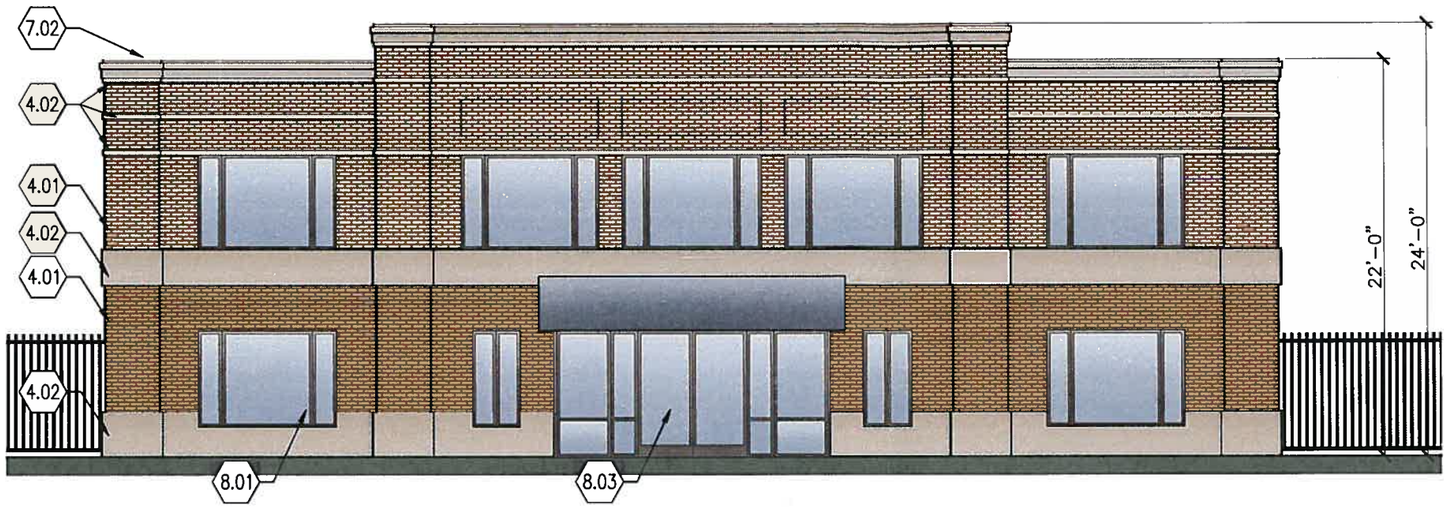

SPECIFIC NOTES:

4.01	BRICK VENEER
4.02	STONE VENEER OR EIFS (T.B.D.)
4.03	CONCRETE BLOCK
7.01	TEX-COTE
7.02	STANDING SEAM METAL ROOF
8.01	FIXED GLASS WINDOW
8.02	METAL OVERHEAD DOOR
8.03	FULL GLASS PASSAGE DOOR
8.04	SOLID PASSAGE DOOR

OFFICE BUILDING
FRONT (SOUTH)
ELEVATION

1/8"=1' 8' 12'

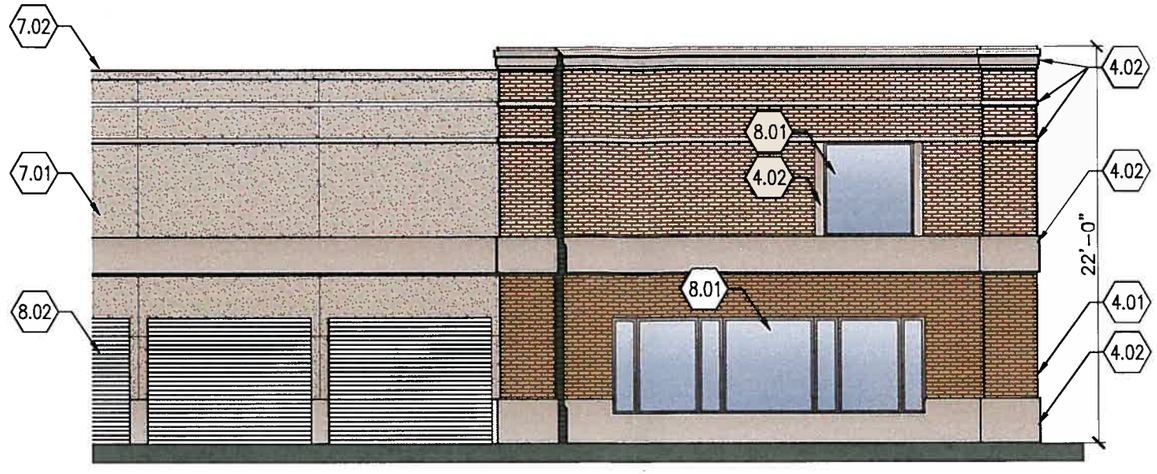

OFFICE BUILDING
PARTIAL SIDE
ELEVATION
1/8"=1' 8' 12'

SPECIFIC NOTES:

4.01	BRICK VENEER
4.02	STONE VENEER OR EIFS (T.B.D.)
7.01	TEX-COTE
7.02	STANDING SEAM METAL ROOF
8.01	FIXED GLASS WINDOW
8.02	METAL OVERHEAD DOOR
8.03	FULL GLASS PASSAGE DOOR
8.04	SOLID PASSAGE DOOR

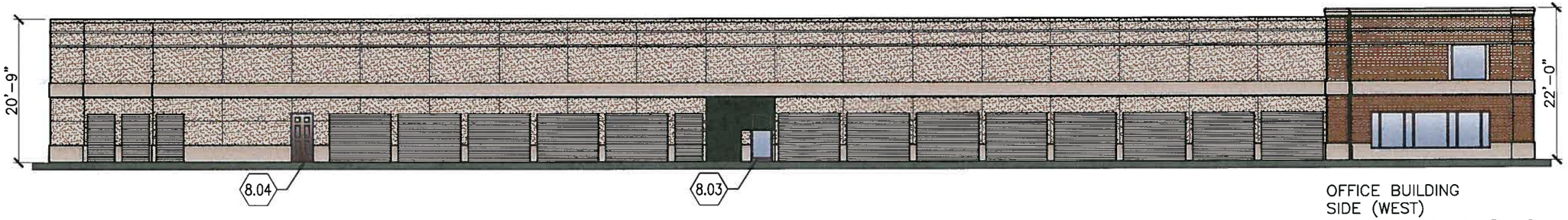

OFFICE BUILDING
SIDE (WEST)
ELEVATION
1/16"=1' 16' 24'

SPECIFIC NOTES:

4.01	BRICK VENEER
4.02	STONE VENEER OR EIFS (T.B.D.)
4.03	CONCRETE BLOCK
7.01	TEX–COTE
7.02	STANDING SEAM METAL ROOF
8.01	FIXED GLASS WINDOW
8.02	METAL OVERHEAD DOOR
8.03	FULL GLASS PASSAGE DOOR
8.04	SOLID PASSAGE DOOR

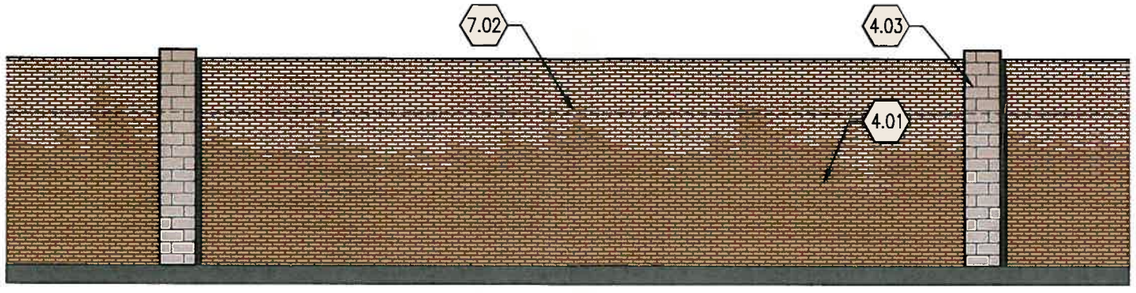

TYPICAL STORAGE BUILDING
PARTIAL
ELEVATION
1/8"=1' 8' 12'

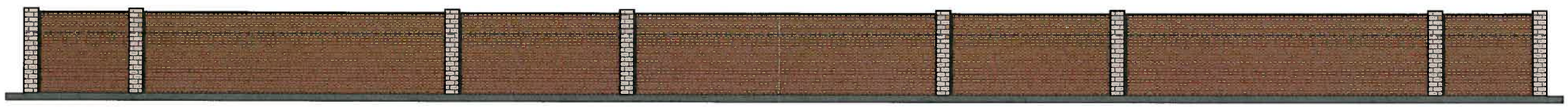

TYPICAL STORAGE BUILDING
FRONT
ELEVATION
1/16"=1' 16' 24'

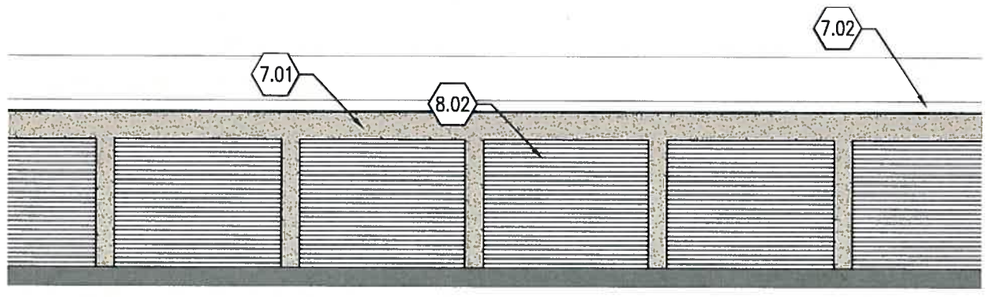

TYPICAL STORAGE BUILDING
PARTIAL
ELEVATION
1/8"=1' 8' 12'

SPECIFIC NOTES:

4.01	BRICK VENEER
4.02	STONE VENEER OR EIFS (T.B.D.)
4.03	CONCRETE BLOCK
7.01	TEX-COTE
7.02	STANDING SEAM METAL ROOF
8.01	FIXED GLASS WINDOW
8.02	METAL OVERHEAD DOOR
8.03	FULL GLASS PASSAGE DOOR
8.04	SOLID PASSAGE DOOR

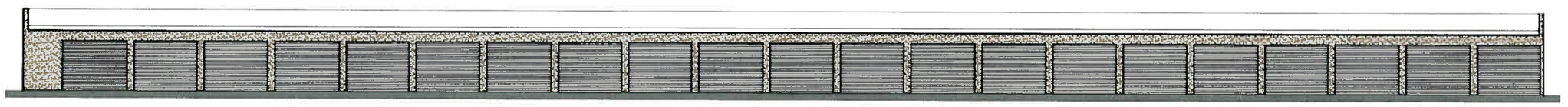

TYPICAL STORAGE BUILDING
FRONT
ELEVATION
1/16"=1' 16' 24'