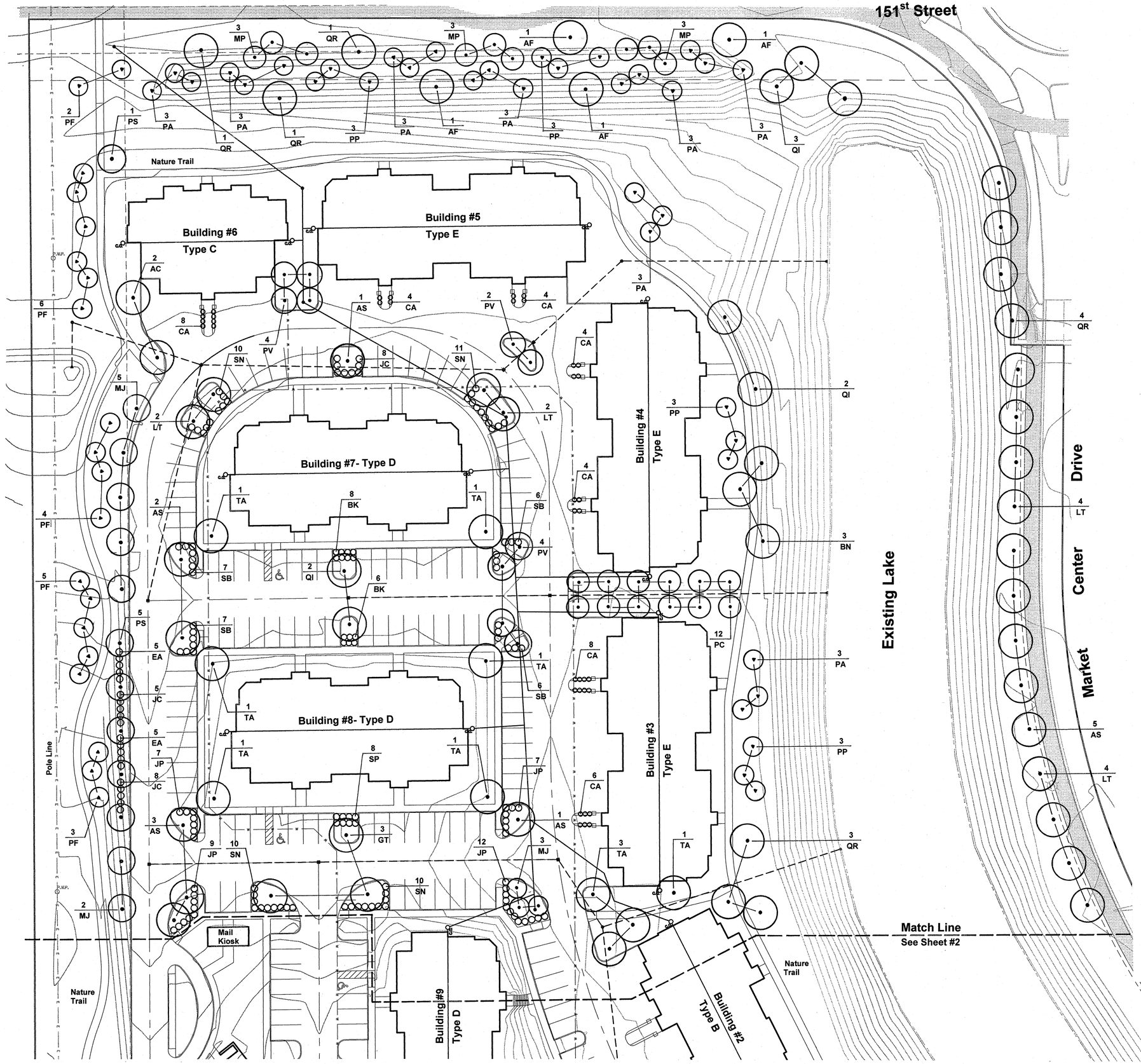

Overall Planting Schedule

KEY	BOTANICAL NAME/ COMMON NAME	QUAN.	SIZE	REMARKS
AC	AESCULUS x CARNEA 'FT. MCNAIR'/ FT. MCNAIR HORSECHESTNUT	7	2-1/2" B&B	CENTRAL LEADER, HEADED UP 4' MIN., MATCHING
AF	ACER x FREEMANII 'JEFFERSRED'/ AUTUMN BLAZE MAPLE	11	2-1/2" B&B	CENTRAL LEADER, HEADED UP 4-5', MATCHING
AS	ACER SACCHARUM 'LEGACY'/ LEGACY SUGAR MAPLE	30	2-1/2" B&B	CENTRAL LEADER, HEADED UP 4-5', MATCHING
BN	BETULA NIGRA 'CULLY'/ HERITAGE RIVER BIRCH	16	2-1/2" B&B	CENTRAL LEADER, HEADED UP 4-5', MATCHING
BK	BUXUS x KOR. 'GREEN MOUNTAIN/ GREEN MOUNTAIN BOXWOOD	77	30" CONT.	B&B SUBSTITUTE, NO FIELD POTTED PLANTS
CA	CALAMAGROSTIS 'KARL FOESTER'/ KARL FOESTER FEATHER REED GRASS	98	#3 CONT.	PLANT 3'-0" O.C. IN ISLANDS AS SHOWN
EA	EUONYMUS ALATUS 'COMPACTUS'/ DWARF BURNING BUSH	37	36" B&B	36" CONT. GROWN SUBSTITUTE ALLOWED
GT	GLEDITSIA TRIACANTHOS 'IMPCOLE/ IMPERIAL HONEYLOCUST	24	2-1/2" B&B	CENTRAL LEADER, HEADED UP 5', MATCHING
JC	JUNIPERUS CHINENSIS 'SEA GREEN'/ SEA GREEN JUNIPER	95	36" CONT.	36" B&B SUBSTITUTE, NO FIELD POTTED PLANTS
JP	JUNIPERUS 'PLUMOSA YOUNGSTOWN'/ ANDORRA JUNIPER	53	36" CONT.	36" B&B SUBSTITUTE, NO FIELD POTTED PLANTS
LT	LIRIODENDRON TULIPIFERA/ TULIP TREE	21	2-1/2" B&B	CENTRAL LEADER, HEADED UP 5', MATCHING
MJ	MALUS 'JEWELCOLE'/ RED JEWEL FLOWERING CRAB	22	2" B&B	CENTRAL LEADER, HEADED UP 3-4', MATCHING
MP	MALUS 'PRAIRIFIRE'/ PRAIRIFIRE FLOWERING CRAB	17	2" B&B	CENTRAL LEADER, HEADED UP 3-4', MATCHING
MR	MALUS 'RED JADE'/ RED JADE DWARF WEEPING CRAB	17	2" B&B	SPECIMEN QUALITY, MATCHING IN GROUPS
PA	PICEA ABIES/ NORWAY SPRUCE	62	8' B&B	FULL, SINGLE LEADER, MATCHING
PF	PICEA PUNGENS 'FAT ALBERT'/ FAT ALBERT SPRUCE	37	6-7' B&B	PLANT 18' MIN. FROM POLE LINE IN POWER EASEMENT
PC	PYRUS CALLERYANA 'CHANTICLEER'/ CLEVELAND SELECT PEAR	18	2" B&B	CENTRAL LEADER, HEADED UP 4', MATCHING
PG	PICEA PUNGENS 'GLAUCA'/ COLORADO BLUE SPRUCE	18	8' B&B	FULL, SINGLE LEADER, MATCHING BLUE COLOR
PP	PICEA PUNGENS/ COLORADO GREEN SPRUCE	26	8' B&B	FULL, SINGLE LEADER, MATCHING GREEN COLOR
PS	PRUNUS x CISTENA 'SCHMIDTCIS'/ BIG CIS PLUM	12	2" B&B	CENTRAL LEADER, HEADED UP 4' MIN., MATCHING
PV	PRUNUS VIGINIANA 'CANADA RED'/ CANADA RED CHOKECHERRY	18	2" B&B	CENTRAL LEADER, HEADED UP 4' MIN., MATCHING
QI	QUERCUS IMBRICARIA/ SHINGLE OAK	20	2-1/2" B&B	CENTRAL LEADER, HEADED UP 4-5', MATCHING
QR	QUERCUS RUBRA/ RED OAK	16	2-1/2" B&B	CENTRAL LEADER, HEADED UP 4-5', MATCHING
SB	SPIRAEA x BUM. 'ANTHONY WATERER/ ANTHONY WATERER SPIREA	46	30" CONT.	30" B&B SUBSTITUTE, NO FIELD POTTED PLANTS
SN	SPIRAEA NIPPONICA 'SNOWMOUND'/ SNOWMOUND SPIREA	58	30" CONT.	30" B&B SUBSTITUTE, NO FIELD POTTED PLANTS
SP	SYRINGA PATULA 'MISS KIM'/ MISS KIM DWARF LILAC	30	36" CONT.	36" B&B SUBSTITUTE, NO FIELD POTTED PLANTS
TA	TILIA AMERICANA 'REDMOND'/ REDMOND LINDEN	26	2-1/2" B&B	CENTRAL LEADER, HEADED UP 4-5', MATCHING
TO	THUJA OCCIDENTALIS 'TECHNY'/ MISSION ARBORVITAE	28	6' B&B	FULL, MATCHING

Detail Planting Schedule

KEY	BOTANICAL NAME/ COMMON NAME	QUAN.	SIZE	REMARKS
AA	AMELANCHIER 'AUTUMN BRILLIANCE'/ AUTUMN BRILLIANCE SERVICEBERRY	7	1-3/4" B&B	SINGLE STEM SPECIMENS BRACHED AT 3-4' HEIGHT
BG	BUXUS x KOREANA 'GREEN VELVET'/ GREEN VELVET BOXWOOD	94	24" CONT.	B&B SUBSTITUTE, NO FIELD POTTED PLANTS
BK	BUXUS x KOR. 'GREEN MOUNTAIN/ GREEN MOUNTAIN BOXWOOD	120	30" CONT.	B&B SUBSTITUTE, NO FIELD POTTED PLANTS
CI	CRATEAGUS CRUSGALLI 'INERMIS'/ THORNLESS COCKSPUR HAWTHORN	18	2" B&B	CENTRAL LEADER, HEADED UP 3-4', MATCHING
CK	CORNUS KOUSA 'RUTDAN'/ CELESTIAL DOGWOOD	18	2" B&B	CENTRAL LEADER, HEADED UP 3-4', MATCHING
IM	ILEX x MESERVAE 'CHINA GIRL'/ CHINA GIRL HOLLY	56	30" CONT.	B&B SUBSTITUTE, NO FIELD POTTED PLANTS
JC	JUNIPERUS CHINENSIS 'SEA GREEN'/ SEA GREEN JUNIPER	19	36" CONT.	36" B&B SUBSTITUTE, NO FIELD POTTED PLANTS
MC	MALUS 'CORALCOLE'/ CORALBURST FLOWERING CRAB	7	1-1/2" B&B	48" MIN. HEAD SIZE
MJ	MALUS 'JEWELCOLE'/ RED JEWEL FLOWERING CRAB	20	2" B&B	CENTRAL LEADER, HEADED UP 3-4', MATCHING
ML	MALUS 'LOUISA'/ LOUISA WEEPING CRAB	5	2" B&B	SPECIMEN QUALITY, MATCHING PLANTS
MS	MISCANTHUS SINENSIS 'ADAGIO'/ ADAGIO DWARF MAIDEN GRASS	6	3 GAL	
PC	PYRUS CALLERYANA 'CHANTICLEER'/ CLEVELAND SELECT PEAR	19	2" B&B	CENTRAL LEADER, HEADED UP 4', MATCHING
PD	PICEA GLAUCA 'DENSATA'/ BLACK HILLS SPRUCE	7	8' B&B	SINGLE LEADER, FULL, MATCHING PLANTS
PH	PENNISETUM ALOPEC. 'HAMELN'/ HAMELN DWARF FOUNTAIN GRASS	12	3 GAL	
SJ	SPIRAEA JAPONICA 'NEON FLASH/ NEON FLASH SPIREA	20	24" CONT.	24" B&B SUBSTITUTE, NO FIELD POTTED PLANTS
SN	SPIRAEA NIPPONICA 'SNOWMOUND'/ SNOWMOUND SPIREA	62	30" CONT.	30" B&B SUBSTITUTE, NO FIELD POTTED PLANTS
SP	SYRINGA PATULA 'MISS KIM'/ MISS KIM DWARF LILAC	57	30" CONT.	30" B&B SUBSTITUTE, NO FIELD POTTED PLANTS
SR	SYRINGA RETICULATA 'IVORY SILK'/ IVORY SILK TREE LILAC	10	2" B&B	CENTRAL LEADER, HEADED UP 3-4', MATCHING
TM	TAXUS x MEDIA 'WARDII'/ WARD'S SPREADING YEW	40	30" B&B	30" CONT. GROWN SUBSTITUTE ALLOWED
TO	THUJA OCCIDENTALIS 'TECHNY'/ MISSION ARBORVITAE	2	6' B&B	FULL, MATCHING
VB	VIBURNUM x BURKWOODII/ BURKWOOD VIBURNUM	49	36" B&B	36" CONT. GROWN SUBSTITUTE ALLOWED
VC	VIBURNUM CARLESSI 'COMPACTUM'/ DWARF KOREANSPICE VIBURNUM	76	30" CONT.	30" B&B SUBSTITUTE, NO FIELD POTTED PLANTS

North

Sheet L-1

March 26, 2013
February 1, 2013

Scale in Feet: 0 15 30 60

Prepared for: Justus Companies

Prepared by: HempDesign

Landscape Plan
North Half

Bridgewater Apartments
Westfield, Indiana

Match Line
See Sheet #1

Note: See Sheet L-1 for Overall Plant Schedule

North

Sheet L-2

March 26, 2013
February 1, 2013

Scale in Feet: 0 15 30 60

Existing Lake

Market Center Drive

Proposed Entrance Monumentation to Match Bridgewater

Mail Kiosk

Compactor

Building #9 Type D

Building #2 Type B

Nature Trail

Building #1 Type A

Building #11 Type D

Building #10 Type D

Building #12 Type B

Building #13 Type C

Building #14 Type A

Building #15 Type E

Building #16 Type E

Clubhouse

Pool

Amenity Center

Stone Edge

Flowers

24" Stacked Stone Wall

Pole Line

Power Line Easement

Park Area

Proposed Pavilion

Garden Plots

Nature Trail

Prepared for: justus Companies

Prepared by: HempDesign

Landscape Plan

South Half

Bridgewater Apartments

Westfield, Indiana

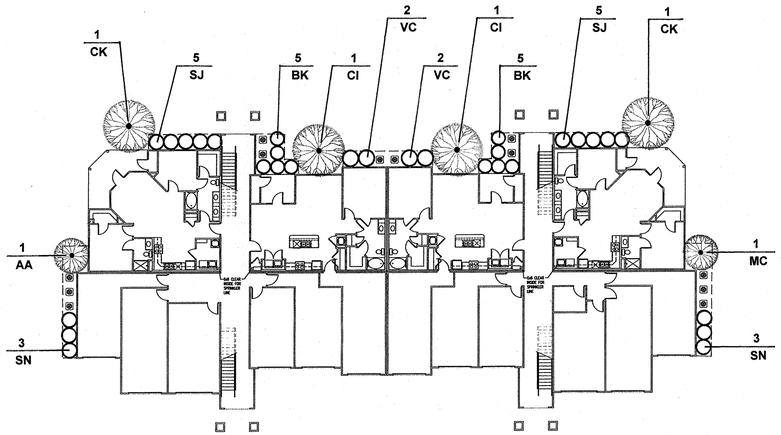

Building Type A
Scale: 1" = 20'

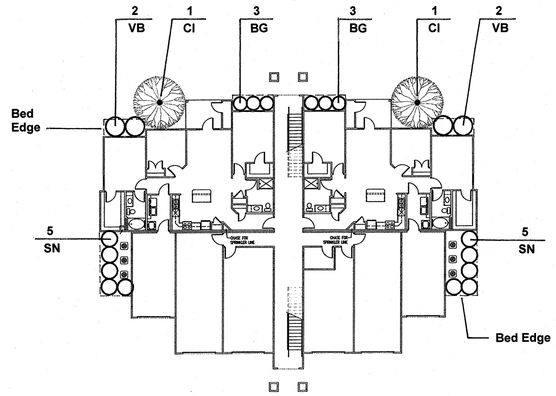

Building Type C
Scale: 1" = 20'

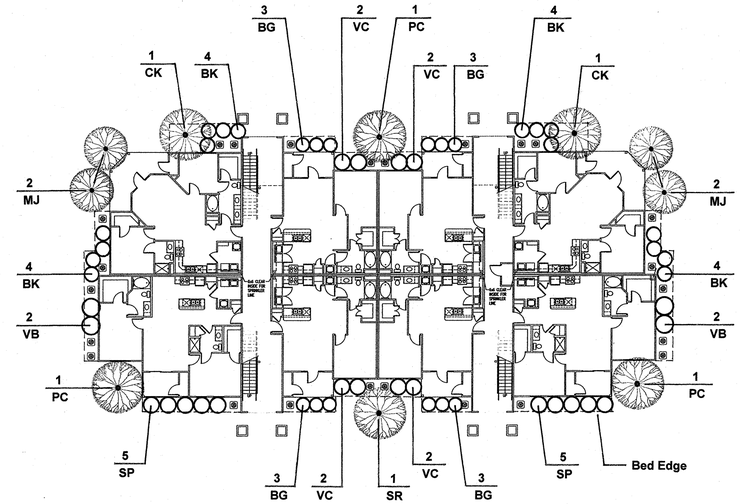

Building Type D
Scale: 1" = 20'

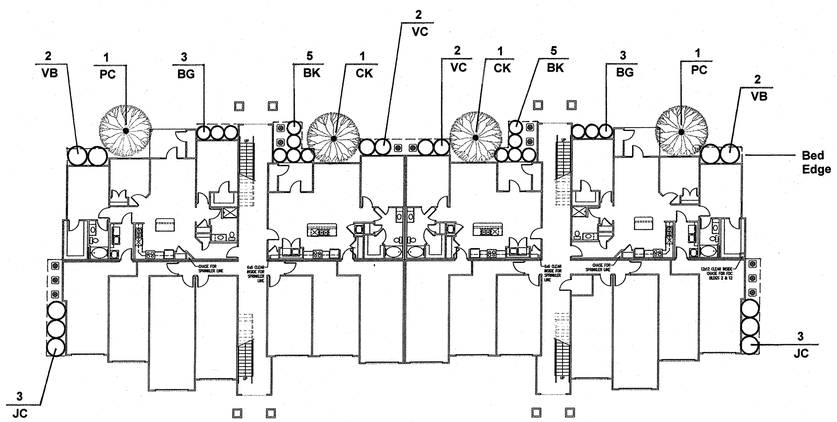

Building Type B
Scale: 1" = 20'

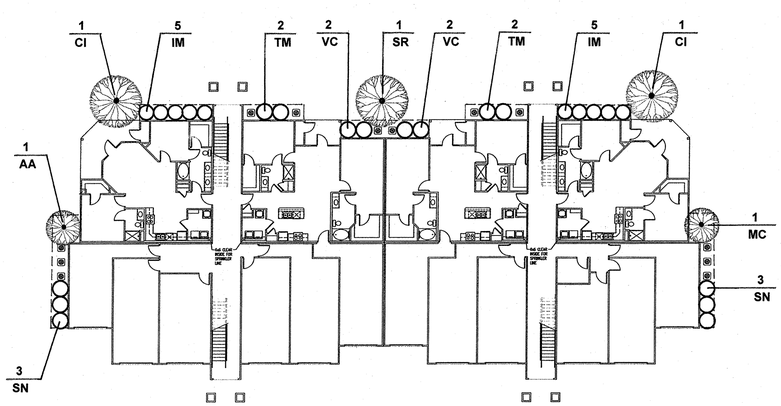

Building Type E
Scale: 1" = 20'

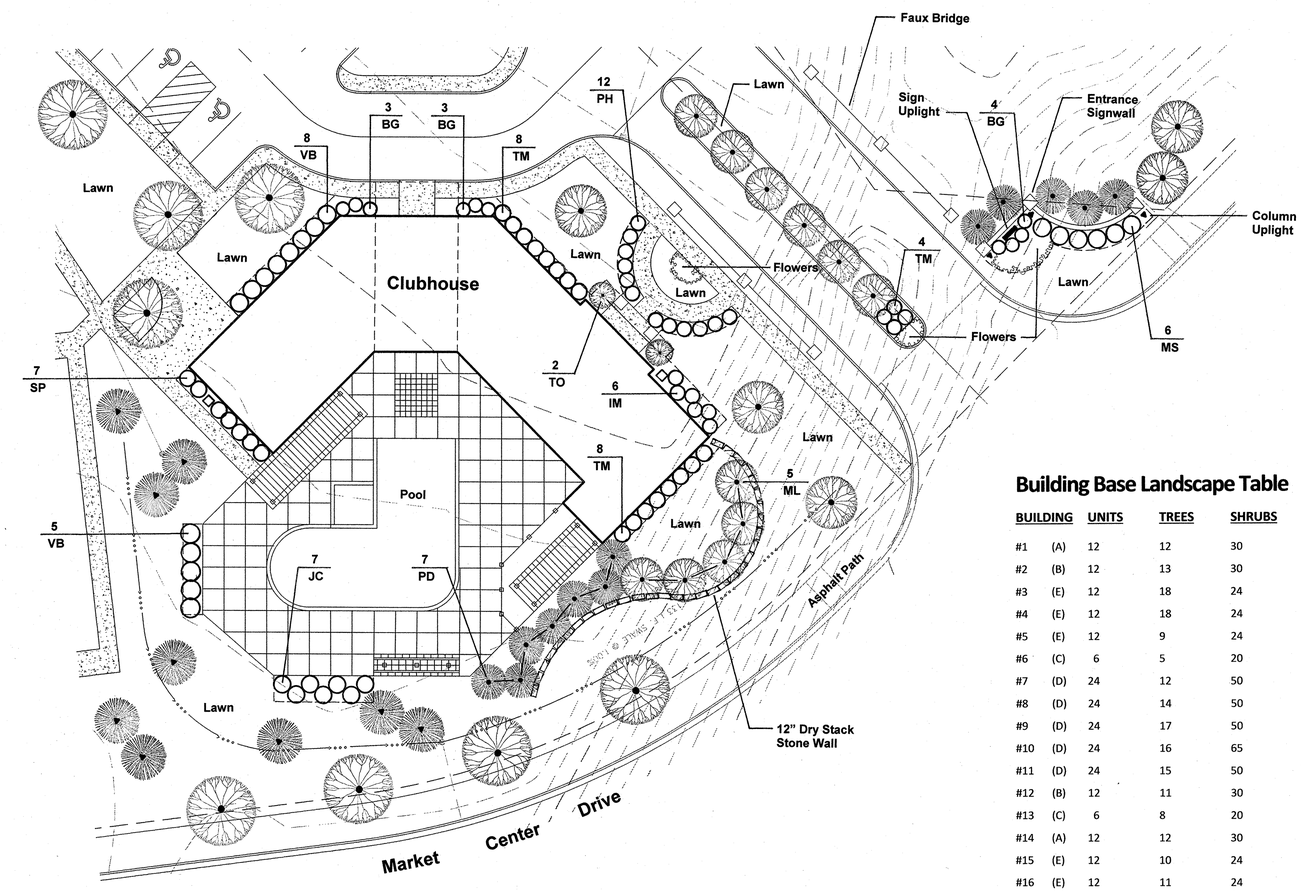

Clubhouse Area
Scale: 1" = 20'

Note: See Sheet L-1 for Detail Plant Schedule

Building Base Landscape Table

BUILDING		UNITS	TREES	SHRUBS
#1	(A)	12	12	30
#2	(B)	12	13	30
#3	(E)	12	18	24
#4	(E)	12	18	24
#5	(E)	12	9	24
#6	(C)	6	5	20
#7	(D)	24	12	50
#8	(D)	24	14	50
#9	(D)	24	17	50
#10	(D)	24	16	65
#11	(D)	24	15	50
#12	(B)	12	11	30
#13	(C)	6	8	20
#14	(A)	12	12	30
#15	(E)	12	10	24
#16	(E)	12	11	24
TOTAL		240	201	545
PER UNIT			0.8	2.3

March 26, 2013
March 7, 2013

Sheet
L-3

Scale in Feet:
0 10 20 40

Prepared for:
Justus Companies

Prepared by:
HempDesign

Landscape Plan
Landscape Details

Bridgewater Apartments
Westfield, Indiana