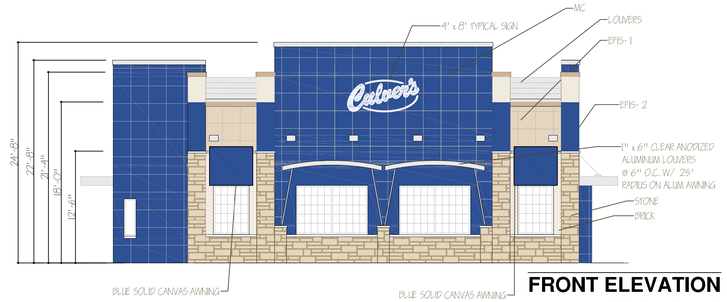

FRONT ELEVATION

SCALE: 1/8" = 1'-0"

FINISH MATERIALS-BUILDING EXTERIOR MATERIALS	
METAL CLADDING:	
MC:	2' x 2' Apolic - USA, Rain Screen System, 4mm Aluminum/ Metal Composite Panels, Color: 4mmAMB3.5 HYB Blue
STONE	
STONE :	Manufacturer: Environmental Stonework, Style: Tuscan Ledge, Color: Aspen
SPECIALITY METAL:	
AWNING:	1"x6" anodized Aluminum louver @6' O.C. w/ 25' radius on Alum Awning
LOUVER:	Clear anodized Aluminum louver mechanical shading, rotated @ 30° @6"O.C.
OTHER:	
EFIS-1	EFIS, FINE SAND FINISH , Color: Light grey
EFIS-2	EFIS, FINE SAND FINISH, Color: Dark grey

LEFT SIDE ELEVATION

SCALE: 1/8" = 1'-0"

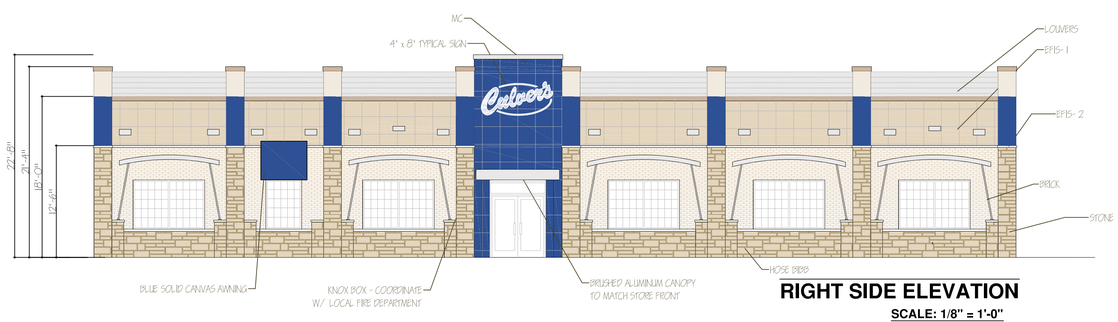

RIGHT SIDE ELEVATION

SCALE: 1/8" = 1'-0"

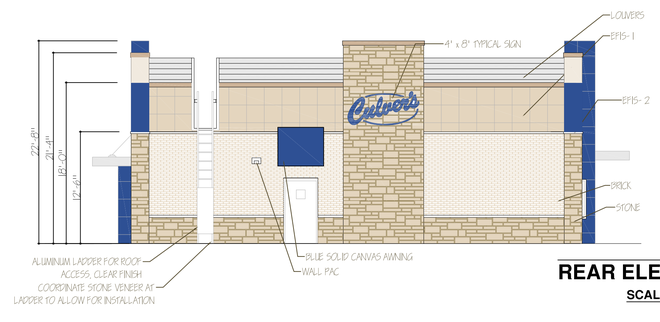

REAR ELEVATION

SCALE: 1/8" = 1'-0"

Date	Revision	By

WARNING!: These plans are for the exclusive use of Culver Franchising Systems, Inc. and authorized franchise holders only. No part of these plans or the design they represent may be duplicated or reproduced without permission of Culver Franchising System, Inc.

Culver Franchising System, Inc.
1240 Water Street
Prairie du Sac, WI 53578
608-643-7980

CULVER FRANCHISING SYSTEM, INC.
333 W 4th STREET, MARION, IN 46952

NEW CULVER'S
0 SUN PARK DRIVE, WESTFIELD, IN 46952

Sheet Contents:

EXT. ELEV'S

Project No.	Metro XL - 2016
Drawn By:	S. Datka
Date:	Dec 01, 2015

Sheet

A-3

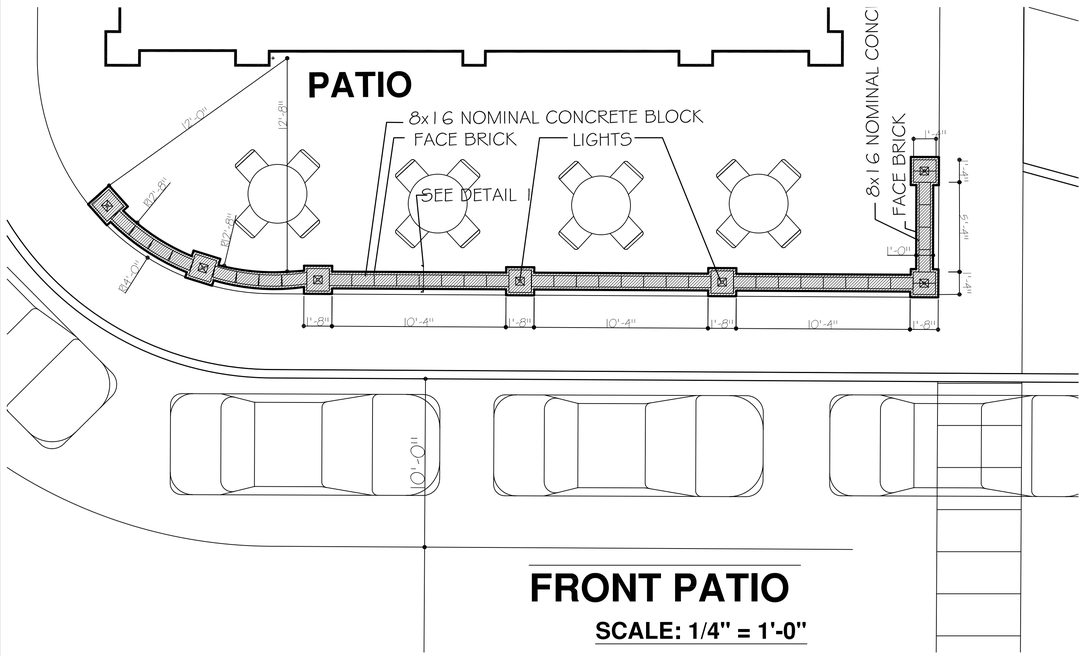

FRONT PATIO

SCALE: 1/4" = 1'-0"

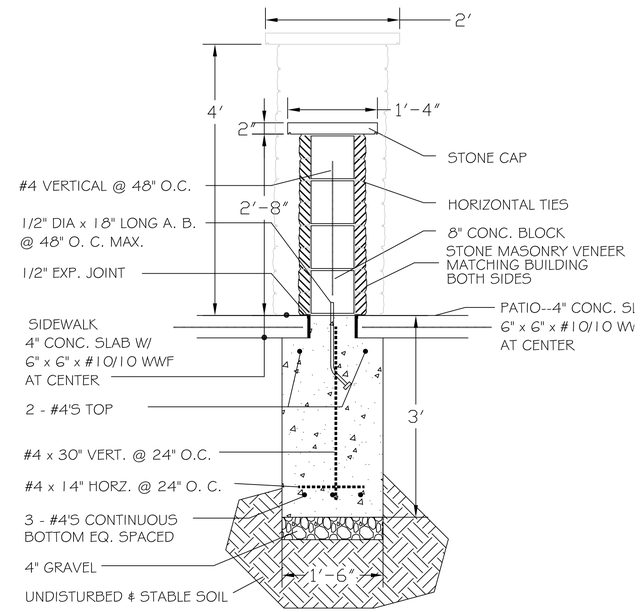

DETAIL 1

FND'N HALF WALL

FRONT ELEVATION

SCALE: 1/4" = 1'-0"

Date	Revision	By

Culver Franchising System, Inc.
1240 Water Street
Prairie du Sac, WI 53578
608-643-7980

CULVER FRANCHISING SYSTEM, INC.
333 W 4th STREET, MARION, IN 46952
NEW CULVER'S
0 SUN PARK DRIVE, WESTFIELD, IN 46952

WARNING: These plans are for the exclusive use of Culver Franchising Systems, Inc. and authorized franchise holders only. No part of these plans or the design they represent may be duplicated or reproduced without permission of Culver Franchising System, Inc.

Sheet Contents:

PATIO DETAIL

Project No. Metro XL - 2016
Drawn By: S. Datka
Date: Dec 01, 2015

Sheet

A-3A