CONSTRUCTION PLANS FOR

17651 SUN PARK ROAD
WESTFIELD, IN 46074

PLANS PREPARED FOR

CUSTARD KINGS
P.O. BOX 1478
MARION, INDIANA 46952
TELEPHONE: (765) 206-0050
CONTACT PERSON: MR. JIM SWAN
EMAIL: JIM.SWAN@MARIONSTEELFAB.COM

PLANS PREPARED BY

WEIHE ENGINEERS, INC.
10505 N. COLLEGE AVE.
INDIANAPOLIS, INDIANA 46280
TELEPHONE: 317.846.6611
FAX: 317.843.0546
CONTACT PERSON: BRAD SCHOEFF
EMAIL: SCHOEFFB@WEIHE.NET

★ PROJECT LOCATION
LOCATION MAP

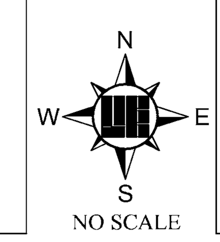

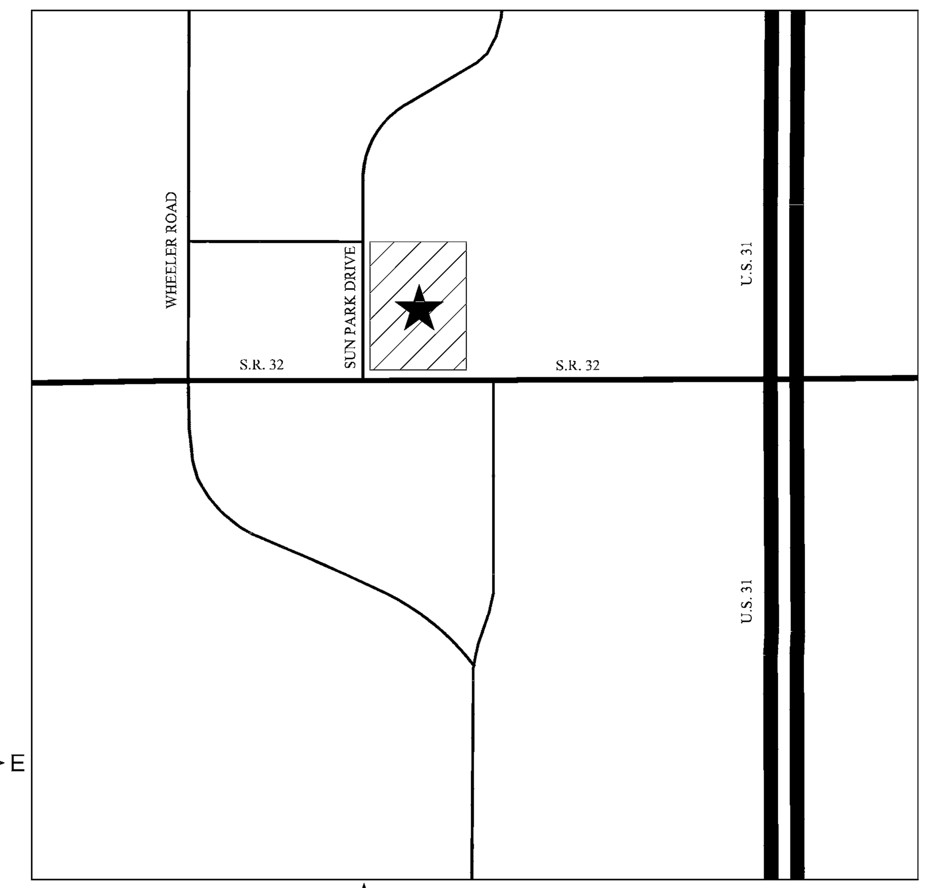

★ PROJECT LOCATION
VICINITY MAP

Sheet Set	
Sheet Number	Sheet Title
C001	TITLE SHEET
1	ALTA ACSM LAND TITLE SURVEY
C100	STORMWATER POLLUTION PREVENTION PLAN PHASE 1
C101	STORMWATER POLLUTION PREVENTION PLAN PHASE 2
C102	SWPPP SPECIFICATIONS
C103	SWPPP DETAILS
C104	SWPPP DETAILS
C200	SITE PLAN
C201	SITE DETAILS
C202	SITE DETAILS
C300	GRADING PLAN
C600	DRAINAGE PLAN
C601	DRAINAGE DETAILS
C602	DRAINAGE DETAILS
C603	DRAINAGE DETAILS
C604	DRAINAGE DETAILS
C605	STORM SEWER PLAN AND PROFILE
C606	STORM SEWER PLAN AND PROFILE
C800	UTILITY PLAN
C801	UTILITY DETAILS
C802	UTILITY DETAILS
C803	UTILITY DETAILS
C900	WESTFIELD GENERAL SPECIFICATIONS
C901	WESTFIELD STORM SEWER SPECIFICATIONS
C902	CITIZENS - WATER SPECIFICATIONS
C903	CITIZENS - WATER SPECIFICATIONS
C904	CITIZENS - SANITARY SEWER SPECIFICATIONS
C905	CITIZENS - SANITARY SEWER SPECIFICATIONS
C906	CITIZENS - SANITARY SEWER SPECIFICATIONS
C907	CITIZENS - SANITARY SEWER SPECIFICATIONS
C908	CITIZENS - SANITARY SEWER SPECIFICATIONS
C909	CITIZENS - SANITARY SEWER SPECIFICATIONS
C910	CITIZENS - SANITARY SEWER SPECIFICATIONS
L100	LANDSCAPE PLAN
L200	LANDSCAPE DETAILS

GENERAL NOTES

1. THE CONTRACTOR SHALL BE RESPONSIBLE FOR OBTAINING, OR VERIFYING THAT ALL PERMITS AND APPROVALS ARE OBTAINED FROM THE RESPECTIVE CITY, COUNTY, AND STATE AGENCIES PRIOR TO STARTING CONSTRUCTION.
2. IT SHALL BE THE CONTRACTORS RESPONSIBILITY TO DETERMINE THE EXACT LOCATION OF ALL EXISTING UTILITIES IN THE VICINITY OF THE CONSTRUCTION AREA PRIOR TO STARTING CONSTRUCTION
3. IT SHALL BE THE CONTRACTORS RESPONSIBILITY TO NOTIFY AND COORDINATE CONSTRUCTION WITH ALL RESPECTIVE UTILITIES.
4. ALL QUANTITIES GIVEN ON THESE PRINTS, VERBALLY OR IN THE SCOPE OF WORK SECTION ARE ESTIMATES AND SHALL BE CONFIRMED BY THE BIDDING CONTRACTORS.
5. OCCUPATIONAL SAFETY AND HEALTH ADMINISTRATION (OSHA) STANDARDS FOR EXCAVATIONS; FINAL RULE 29 CFR PART 1926, SUBPART "P" APPLIES TO ALL EXCAVATIONS EXCEEDING FIVE (5) FEET IN DEPTH.
6. IN ADDITION, EXCAVATION EXCEEDING TWENTY (20) FEET IN DEPTH REQUIRE THE DESIGN OF A TRENCH SAFETY SYSTEM BY A REGISTERED PROFESSIONAL ENGINEER.
7. IT SHALL BE THE RESPONSIBILITY OF THE DEVELOPER AND CONTRACTOR TO MAINTAIN QUALITY CONTROL THROUGHOUT THIS PROJECT.
8. TEMPORARY TRAFFIC CONTROL DURING CONSTRUCTION TO CONFORM TO APPLICABLE LOCAL STANDARDS.
9. THE ENGINEER AND/OR OWNER DISCLAIM ANY ROLE IN THE CONSTRUCTION MEANS AND METHODS ASSOCIATED WITH THE PROJECT AS SET FORTH IN THESE PLANS.
10. ANY FIELD TILES ENCOUNTERED DURING EXCAVATION SHALL BE REPAIRED AND CONNECTED TO NEW STORM SEWERS AND POSITIVE DRAINAGE PRESERVED.
11. IT SHALL BE THE RESPONSIBILITY OF THE DEVELOPER THAT ALL LANDSCAPE REQUIREMENTS ARE MET AND CONFORM TO APPLICABLE LOCAL STANDARDS.
12. THE SITE DOES NOT LIE IN A SPECIAL FLOOD HAZARD AREA AS ESTABLISHED BY THE FEDERAL EMERGENCY MANAGEMENT AGENCY - NATIONAL FLOOD INSURANCE PROGRAM, WHEN PLOTTED BY SCALE ON FLOOD INSURANCE RATE MAP #18057C0120 G, DATED NOVEMBER 19, 2014.
13. BEARINGS, DIMENSIONS AND EASEMENTS ARE SHOWN FOR REFERENCE ONLY. SEE RECORD SURVEYS & PLAT FOR EXACT INFORMATION.
14. THIS SITE DOES CONTAIN A WETLAND AS SHOWN ON THE U.S. DEPARTMENT OF THE INTERIOR FISH AND WILDLIFE SERVICE; WESTFIELD, INDIANA, NATIONAL WETLANDS INVENTORY MAP DATED 2000.

LAND DESCRIPTION

PART OF THE SOUTHEAST QUARTER OF THE SOUTHWEST QUARTER OF SECTION 36, TOWNSHIP 19 NORTH, RANGE 3 EAST IN HAMILTON COUNTY, INDIANA, DESCRIBED AS FOLLOWS:

COMMENCING AT THE SOUTHEAST CORNER OF SAID QUARTER QUARTER SECTION; THENCE ALONG THE SOUTH LINE THEREOF NORTH 89 DEGREES 42 MINUTES 22 SECONDS WEST 576.00 FEET; THENCE PARALLEL WITH THE EAST LINE OF SAID QUARTER QUARTER SECTION NORTH 00 DEGREES 46 MINUTES 41 SECONDS EAST 30.00 FEET TO THE POINT OF BEGINNING; THENCE PARALLEL WITH THE SOUTH LINE OF SAID QUARTER QUARTER SECTION NORTH 89 DEGREES 42 MINUTES 22 SECONDS WEST 180.01 FEET TO THE EASTERLY RIGHT OF WAY LINE OF AN ACCESS ROAD; THENCE ALONG SAID EASTERLY LINE NORTH 44 DEGREES 27 MINUTES 51 SECONDS WEST 28.16 FEET; THENCE NORTH 00 DEGREES 46 MINUTES 41 SECONDS EAST 295.01 FEET; THENCE SOUTH 89 DEGREES 42 MINUTES 22 SECONDS EAST 200.01 FEET; THENCE SOUTH 00 DEGREES 46 MINUTES 41 SECONDS WEST 315.01 FEET TO THE PLACE OF BEGINNING.

EXCEPT:

A PART OF THE SOUTHEAST QUARTER OF THE SOUTHWEST QUARTER OF SECTION 36, TOWNSHIP 19 NORTH, RANGE 3 EAST, HAMILTON COUNTY, INDIANA, DESCRIBED AS FOLLOWS:

COMMENCING AT THE SOUTHEAST CORNER OF SAID QUARTER SECTION; THENCE SOUTH 88 DEGREES 48 MINUTES 00 SECONDS WEST 576.00 FEET ALONG THE SOUTH LINE OF SAID QUARTER-QUARTER SECTION; THENCE NORTH 00 DEGREES 42 MINUTES 57 SECONDS WEST 30.00 FEET TO THE NORTH BOUNDARY OF S.R. 32 AND THE POINT OF BEGINNING OF THIS DESCRIPTION; THENCE SOUTH 88 DEGREES 48 MINUTES 00 SECONDS WEST 180.01 FEET ALONG THE BOUNDARY OF SAID S.R. 32; THENCE NORTH 45 DEGREES 57 MINUTES 29 SECONDS WEST 14.08 FEET ALONG SAID BOUNDARY; THENCE NORTH 88 DEGREES 48 MINUTES 00 SECONDS EAST 190.01 FEET TO THE EAST LINE OF THE OWNERS' LAND; THENCE SOUTH 00 DEGREES 42 MINUTES 57 SECONDS EAST 10.00 FEET ALONG SAID EAST LINE OF THE OWNERS' LAND TO THE BOUNDARY OF S.R. 32 AND THE POINT OF BEGINNING AND CONTAINING 0.042 ACRES, MORE OR LESS.

TOGETHER WITH AN EASEMENT FOR INGRESS AND EGRESS AS RECORDED IN INSTRUMENT NUMBER 8919077.

ALSO EXCEPT THAT PART CONVEYED TO THE STATE OF INDIANA BY WARRANTY DEED RECORDED JULY, 17, 2007 AS INSTRUMENT NO. 2007040165, DESCRIBED AS FOLLOWS:

A PART OF THE SOUTHEAST QUARTER OF THE SOUTHWEST QUARTER OF SECTION 36, TOWNSHIP 19 NORTH, RANGE 3 EAST, HAMILTON COUNTY, INDIANA, AS FOLLOWS:

COMMENCING AT THE SOUTHEAST CORNER OF SAID QUARTER SECTION; THENCE NORTH 89 DEGREES 50 MINUTES 43 SECONDS WEST 576.07 FEET ALONG THE SOUTH LINE OF SAID SECTION TO THE PROLONGED EAST LINE OF THE GRANTOR'S LAND; THENCE NORTH 00 DEGREES 38 MINUTES 07 SECONDS EAST 40.00 FEET ALONG SAID EAST LINE PROLONGED TO THE NORTH BOUNDARY OF S.R. 32 AND THE POINT OF BEGINNING OF THIS DESCRIPTION; THENCE NORTH 89 DEGREES 50 MINUTES 43 SECONDS WEST 189.81 FEET (190.01) FEET BY INSTRUMENT NUMBER 9327322) ALONG THE BOUNDARY OF SAID S.R. 32 TO THE NORTHEASTERN BOUNDARY OF THE INTERSECTION OF SAID S.R. 32 AND SUNPARK DRIVE; THENCE NORTH 44 DEGREES 00 MINUTES 56 SECONDS WEST 14.22 FEET ALONG THE BOUNDARY OF THE INTERSECTION OF SAID S.R. 32 AND SAID SUNPARK DRIVE TO THE EAST BOUNDARY OF SAID SUNPARK DRIVE; THENCE NORTH 00 DEGREES 38 MINUTES 07 SECONDS EAST 249.58 FEET ALONG THE BOUNDARY OF SAID SUNPARK DRIVE; THENCE SOUTH 89 DEGREES 21 MINUTES 40 SECONDS EAST 14.13 FEET; THENCE SOUTH 00 DEGREES 28 MINUTES 20 SECONDS WEST 194.80 FEET; THENCE SOUTH 47 DEGREES 31 MINUTES 04 SECONDS EAST 27.80 FEET; THENCE SOUTH 90 DEGREES 00 MINUTES 00 SECONDS EAST 164.98 FEET TO THE EAST LINE OF GRANTOR'S LAND; THENCE SOUTH 00 DEGREES 38 MINUTES 07 SECONDS WEST 46.59 FEET ALONG SAID EAST LINE TO THE POINT OF BEGINNING AND CONTAINING 0.285 ACRES, MORE OR LESS.

OPERATING AUTHORITIES

VECTREN (GAS)
ATTENTION: BRIAN HARGER
P.O. BOX 1700
NOBLESVILLE, IN 46061
317.776.5560

AMERITECH (TELEPHONE)
ATTENTION: STEVE KREBS
5858 NORTH COLLEGE AVENUE
INDIANAPOLIS, IN 46220
317.252.4275

DUKE ENERGY (ELECTRIC)
ATTENTION: VINCENT LITERAL
100 SOUTH MILL CREEK ROAD
NOBLESVILLE, IN 46062
317.776.5336

CITIZENS WESTFIELD
(WATER AND WASTEWATER)
MITCH HOUSE
MHOUSE@HNTB.COM
317-917-5294

CITIZENS WESTFIELD
(GAS)
RYAN BASCORE
RBASORE@CITIZENSENERGYGROUP.COM
317-927-6415

WESTFIELD DEPT. OF PUBLIC WORKS
ATTENTION: JOHN RANKIN
2706 EAST 171ST STREET
WESTFIELD, IN 46074
317.804.3100

CITY OF WESTFIELD - COMM. DEVEL.
ATTENTION: MATT SKELTON
2728 EAST 171ST STREET
WESTFIELD, IN 46074
317.804.3172

WESTFIELD FIRE DEPARTMENT
ATTENTION: GARRY HARLING
17535 DARTOWN ROAD
WESTFIELD IN 46074
317.896.2704

HAMILTON COUNTY SURVEYOR'S OFFICE
ATTENTION: GREG HOYES
1 HAMILTON COUNTY SQUARE, STE. 146
NOBLESVILLE, IN 46060
317.776.9626

INDOT
ATTENTION: SHELLEY HANEY
32 SOUTH BROADWAY
GREENFIELD, IN 46140
317.467.3492

HAMILTON COUNTY HIGHWAY DEPT.
ATTENTION: DAVE LUCAS
1700 SOUTH 10TH STREET
NOBLESVILLE, IN 46060
317.773.7770

ORIGINATING BENCHMARK

A STANDARD DISK STAMPED HAM G11 SET IN THE TOP OF THE SOUTHWEST CONCRETE WING OF A CULVET ALONG STATE ROAD 32 ABOUT 0.37 MILES EAST OF U.S. 31.
ELEVATION=876.19 (NAVD 88)

TBM:
CUT "X" ON EAST BON BOLT OF FIRE HYDRANT AT THE NORTHWEST INTERSECTION OF STATE ROAD 32 AND SUN PARK DRIVE.
ELEVATION=900.33 (NAVD 88)

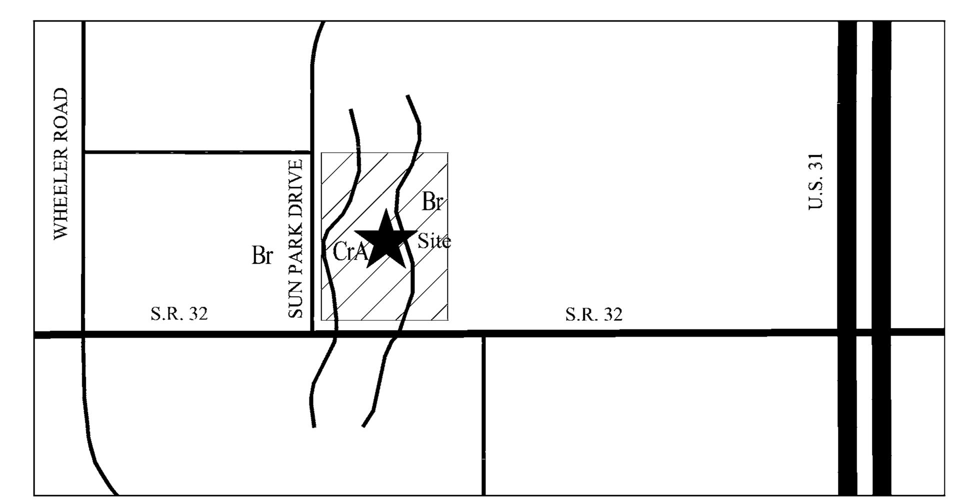

★ PROJECT LOCATION
SOILS MAP

SOILS TYPE LEGEND

Br BROOKSTON SILTY CLAY LOAM
THE MAIN SOIL FEATURES THAT ADVERSELY AFFECT ENGINEERING USES OF THIS SOIL ARE A SEASONAL HIGH WATER TABLE, HIGH POTENTIAL FROST ACTION, MODERATE SHRINK-SWELL POTENTIAL, AND MODERATE PERMEABILITY. THIS SOIL HAS SEVERE LIMITATIONS FOR BUILDING SITES. THE SITES NEED TO BE ARTIFICIALLY DRAINED AND PROTECTED FROM FLOODING. DWELLINGS AND SMALL BUILDINGS WITH BASEMENTS SHOULD NOT BE CONSTRUCTED ON THIS SOIL. USING PROPERLY DESIGNED FOUNDATIONS AND FOOTINGS HELPS TO PREVENT STRUCTURAL DAMAGE FROM FROST ACTION AND SHRINKING AND SWELLING OF THE SOIL. THIS SOIL HAS SEVERE LIMITATIONS FOR LOCAL ROADS AND STREETS BECAUSE OF SEASONAL HIGH WATER TABLE AND HIGH POTENTIAL FROST ACTION. INSTALLATION OF DRAINAGE DITCHES ALONG ROADS HELPS TO LOWER THE WATER TABLE AND PREVENT DAMAGE FROM FROST ACTION. THE BASE MATERIAL FOR ROADS AND STREETS SHOULD BE REPLACED OR STRENGTHENED WITH SUITABLE MATERIAL.

CrA CROSBY SILT LOAM
0 TO 2 PERCENT SLOPES. THE MAIN SOIL FEATURES THAT ADVERSELY AFFECT THE ENGINEERING USES OF THIS SOIL ARE A SEASONAL HIGH WATER TABLE, MODERATE SHRINK-SWELL POTENTIAL, HIGH POTENTIAL FROST ACTION, AND SLOW PERMEABILITY. THIS SOIL HAS SOME SEVERE LIMITATIONS FOR BUILDING SITES. THE SITES NEED TO BE ARTIFICIALLY DRAINED TO PREVENT WETNESS FROM BECOMING A PROBLEM. DWELLINGS AND SMALL BUILDINGS WITH BASEMENTS SHOULD NOT BE CONSTRUCTED ON THIS SOIL. USING PROPERLY DRAINED FOUNDATIONS AND FOOTINGS HELPS TO PREVENT STRUCTURAL DAMAGE FROM LOW STRENGTH AND SHRINKING AND SWELLING OF THE SOIL. THIS SOIL HAS SEVER LIMITATIONS FOR LOCAL ROADS AND STREETS. THE BASE MATERIAL FOR ROADS NEEDS TO BE STRENGTHENED OR REPLACED WITH SUITABLE MATERIAL.

811
Know what's **below.**
Call before you dig.
Within Indiana Call
811 or 800-382-5544
24 Hours a Day, 7 Days a Week.
PER INDIANA STATE LAW IC 8-1-26. IT IS AGAINST THE LAW TO EXCAVATE WITHOUT NOTIFYING THE UNDERGROUND LOCATION SERVICE TWO (2) WORKING DAYS BEFORE COMMENCING WORK.

10505 N. College Avenue
Indianapolis, Indiana 46280
weihe.net
317 | 846 - 6611
800 | 452 - 6408
317 | 843 - 0546 *fax*
ALLAN H. WEIHE, P.E., L.S. - FOUNDER

WEIHE ENGINEERS
Land Surveying | Civil Engineering
Landscape Architecture

PROJECT NO.: W15.0316
DWG NAME: w150316-C001 title.dwg
DESIGNED BY: RLW
DRAWN BY: RLW
CHECKED BY: BJS
DATE: 01.29.2016

REVISIONS AND ISSUES	DATE	BY
SUBMITTED FOR COUNTY SURVEYOR REVIEW	10.16.2015	BJS
ISSUED FOR TAC REVIEW	01.29.2016	BJS

STEVEN SCOTT RUCKER REGISTERED PE11300279 STATE OF INDIANA PROFESSIONAL ENGINEER
APPROVAL PENDING NOT FOR CONSTRUCTION

STEVEN SCOTT RUCKER P.E. 11300279

PREPARED FOR: Culver's of WESTFIELD
17651 SUN PARK DRIVE, WESTFIELD, IN 46074

TITLE SHEET
Part of SW/4, Section 36, Township 19 North, Range 3 East, Washington Township, Hamilton County, Indiana

SHEET NO.
C001

PROJECT NO.
W15.0316

LOCATION: H:\2015\w150316\Engineering\design\conset\w150316-C001 title.dwg
LAYOUT: C001
DATE/TIME: January 28, 2016 - 2:40pm
PLOTTED BY: schoeffb

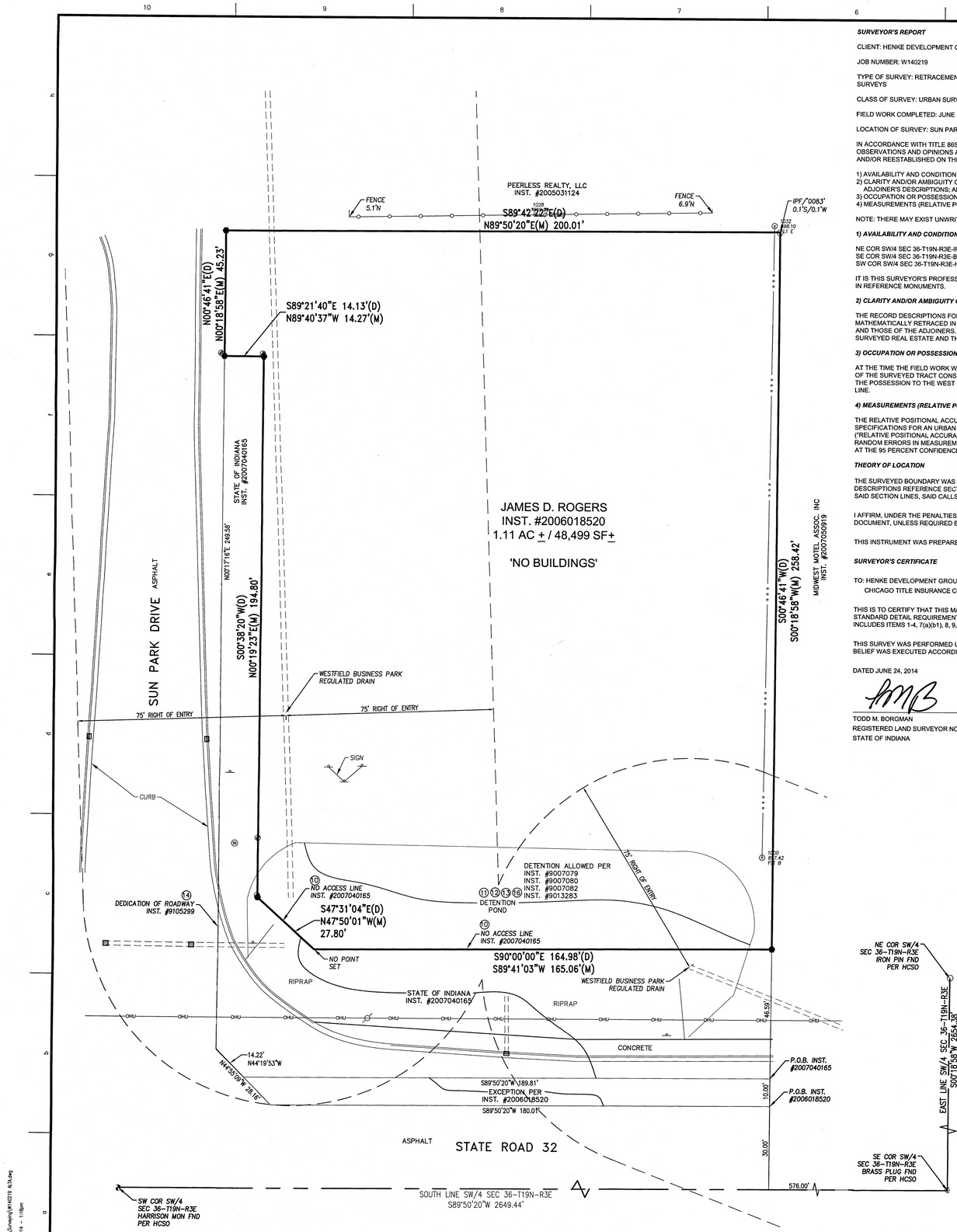

SURVEYOR'S REPORT

CLIENT: HENKE DEVELOPMENT GROUP, LLC

JOB NUMBER: W140219

TYPE OF SURVEY: RETRACEMENT SURVEY MEETING THE 2011 MINIMUM STANDARD DETA'L REQUIREMENTS FOR ALTA/ACSM LAND TITLE SURVEYS

CLASS OF SURVEY: URBAN SURVEY (865 IAC 1-12)

FIELD WORK COMPLETED: JUNE 16, 2014

LOCATION OF SURVEY: SUN PARK DRIVE AND SR 32, WESTFIELD, INDIANA

IN ACCORDANCE WITH TITLE 865, ARTICLE 1, CHAPTER 12 (RULE 12) OF THE INDIANA ADMINISTRATIVE CODE (IAC), THE FOLLOWING OBSERVATIONS AND OPINIONS ARE SUBMITTED REGARDING THE UNCERTAINTY IN THE POSITION OF THE LINES AND CORNERS ESTABLISHED AND/OR REESTABLISHED ON THIS SURVEY AS A RESULT OF:

1) AVAILABILITY AND CONDITION OF REFERENCE MONUMENTS;
2) CLARITY AND/OR AMBIGUITY OF THE RECORD DESCRIPTION(S) USED AND/OR THE ADJOINER'S DESCRIPTIONS; AND
3) OCCUPATION OR POSSESSION LINES.
4) MEASUREMENTS (RELATIVE POSITIONAL ACCURACY)

NOTE: THERE MAY EXIST UNWRITTEN RIGHTS ASSOCIATED WITH THESE UNCERTAINTIES.

1) AVAILABILITY AND CONDITION OF REFERENCE MONUMENTS

NE COR SW/4 SEC 36-T19N-R3E-IRON PIN FOUND PER HCSO
SE COR SW/4 SEC 36-T19N-R3E-BRASS PLUG FOUND PER HCSO
SW COR SW/4 SEC 36-T19N-R3E-HARRISON MONUMENT FOUND PER HCSO

IT IS THIS SURVEYOR'S PROFESSIONAL OPINION THAT THERE IS NO UNCERTAINTY IN THE LINES OF THE SURVEYED TRACT DUE TO VARIANCES IN REFERENCE MONUMENTS.

2) CLARITY AND/OR AMBIGUITY OF THE RECORD DESCRIPTION(S)

THE RECORD DESCRIPTIONS FOR THE ADJOINING REAL ESTATE WERE OBTAINED FROM THE HAMILTON COUNTY RECORDER'S OFFICE AND MATHEMATICALLY RETRACED IN AN EFFORT TO DISCLOSE POSSIBLE GAPS AND/OR OVERLAPS BETWEEN THE LINES OF THE SURVEYED TRACT AND THOSE OF THE ADJOINERS. IT IS THIS SURVEYOR'S PROFESSIONAL OPINION THAT THERE ARE NO UNCERTAINTIES IN THE LINES OF THE SURVEYED REAL ESTATE AND THOSE OF THE ADJOINERS DUE TO DISCREPANCIES IN THE RECORD DESCRIPTIONS.

3) OCCUPATION OR POSSESSION LINES

AT THE TIME THE FIELD WORK WAS COMPLETED, PHYSICAL EVIDENCE OF THE LINES AND/OR INCONSISTENCIES IN THE LINES OF OCCUPATION OF THE SURVEYED TRACT CONSISTED OF THE FOLLOWING:
THE POSSESSION TO THE WEST IS TO THE IMPROVEMENTS OF SUN PARK DRIVE. THERE IS FENCE 5.1 FEET NORTH OF THE NORTH BOUNDARY LINE.

4) MEASUREMENTS (RELATIVE POSITIONAL ACCURACY)

THE RELATIVE POSITIONAL ACCURACY OF THE CORNERS OF THE SUBJECT TRACT ESTABLISHED FOR THIS SURVEY IS WITHIN THE SPECIFICATIONS FOR AN URBAN SURVEY (+/- 0.07 FOOT PLUS 50 PARTS PER MILLION) AS DEFINED IN 865 IAC 1-12-8, EFFECTIVE MAY 4, 2006. ("RELATIVE POSITIONAL ACCURACY" MEANS THE VALUE EXPRESSED IN FEET OR METERS THAT REPRESENTS THE UNCERTAINTY DUE TO RANDOM ERRORS IN MEASUREMENTS IN THE LOCATION OF ANY POINT ON A SURVEY RELATIVE TO ANY OTHER POINT ON THE SAME SURVEY AT THE 95 PERCENT CONFIDENCE LEVEL).

THEORY OF LOCATION

THE SURVEYED BOUNDARY WAS ESTABLISHED BY HONORING CONTROLLING CALLS IN INSTRUMENT #2006018520 AND #2007040165. THE DESCRIPTIONS REFERENCE SECTION CORNERS AND LINES ESTABLISHED BY THE MONUMENTS LISTED ABOVE. AFTER THE ESTABLISHMENT OF SAID SECTION LINES, SAID CALLS WERE USED TO RETRACE THE SURVEYED BOUNDARY.

I AFFIRM, UNDER THE PENALTIES FOR PERJURY, THAT I HAVE TAKEN REASONABLE CARE TO REDACT EACH SOCIAL SECURITY NUMBER IN THIS DOCUMENT, UNLESS REQUIRED BY LAW. (TODD BORGMAN)

THIS INSTRUMENT WAS PREPARED BY: TODD BORGMAN, WEIHE ENGINEERS, INC.

SURVEYOR'S CERTIFICATE

TO: HENKE DEVELOPMENT GROUP, LLC, AN INDIANA LIMITED LIABILITY COMPANY;
CHICAGO TITLE INSURANCE COMPANY;

THIS IS TO CERTIFY THAT THIS MAP OR PLAT AND THE SURVEY ON WHICH IT IS BASED WERE MADE IN ACCORDANCE WITH THE 2011 MINIMUM STANDARD DETAIL REQUIREMENTS FOR ALTA/ACSM LAND TITLE SURVEYS, JOINTLY ESTABLISHED AND ADOPTED BY ALTA AND NSPS, AND INCLUDES ITEMS 1-4, 7(a)(b1), 8, 9, 11(a) AND 13 OF TABLE A THEREOF. THE FIELD WORK WAS COMPLETED ON JUNE 16, 2014.

THIS SURVEY WAS PERFORMED UNDER THE DIRECTION OF THE UNDERSIGNED, AND TO THE BEST OF THIS SURVEYOR'S KNOWLEDGE AND BELIEF WAS EXECUTED ACCORDING TO SURVEY REQUIREMENTS IN 865 IAC 1.12 FOR THE STATE OF INDIANA.

DATED JUNE 24, 2014

TODD M. BORGMAN
REGISTERED LAND SURVEYOR NO. 21200021
STATE OF INDIANA

TODD M. BORGMAN REGISTERED No. LS21200021 STATE OF INDIANA LAND SURVEYOR

LEGAL DESCRIPTION-PER TITLE COMMITMENT

PART OF THE SOUTHEAST QUARTER OF THE SOUTHWEST QUARTER OF SECTION 36, TOWNSHIP 19 NORTH, RANGE 3 EAST IN HAMILTON COUNTY, INDIANA, DESCRIBED AS FOLLOWS:

COMMENCING AT THE SOUTHEAST CORNER OF SAID QUARTER QUARTER SECTION; THENCE ALONG THE SOUTH LINE THEREOF NORTH 89 DEGREES 42 MINUTES 22 SECONDS WEST 576.00 FEET; THENCE PARALLEL WITH THE EAST LINE OF SAID QUARTER QUARTER SECTION NORTH 00 DEGREES 46 MINUTES 41 SECONDS EAST 30.00 FEET TO THE POINT OF BEGINNING; THENCE PARALLEL WITH THE SOUTH LINE OF SAID QUARTER QUARTER SECTION NORTH 89 DEGREES 42 MINUTES 22 SECONDS WEST 180.01 FEET TO THE EASTERLY RIGHT OF WAY LINE OF AN ACCESS ROAD; THENCE ALONG SAID EASTERLY LINE NORTH 44 DEGREES 27 MINUTES 51 SECONDS WEST 28.16 FEET; THENCE NORTH 00 DEGREES 46 MINUTES 41 SECONDS EAST 295.01 FEET; THENCE SOUTH 89 DEGREES 42 MINUTES 22 SECONDS EAST 200.01 FEET; THENCE SOUTH 00 DEGREES 46 MINUTES 41 SECONDS WEST 315.01 FEET TO THE PLACE OF BEGINNING.

EXCEPT:

A PART OF THE SOUTHEAST QUARTER OF THE SOUTHWEST QUARTER OF SECTION 36, TOWNSHIP 19 NORTH, RANGE 3 EAST, HAMILTON COUNTY, INDIANA, DESCRIBED AS FOLLOWS:

COMMENCING AT THE SOUTHEAST CORNER OF SAID QUARTER SECTION; THENCE SOUTH 88 DEGREES 48 MINUTES 00 SECONDS WEST 576.00 FEET ALONG THE SOUTH LINE OF SAID QUARTER-QUARTER SECTION; THENCE NORTH 00 DEGREES 42 MINUTES 57 SECONDS WEST 30.00 FEET TO THE NORTH BOUNDARY OF S.R. 32 AND THE POINT OF BEGINNING OF THIS DESCRIPTION; THENCE SOUTH 88 DEGREES 48 MINUTES 00 SECONDS WEST 180.01 FEET ALONG THE BOUNDARY OF SAID S.R. 32; THENCE NORTH 45 DEGREES 57 MINUTES 29 SECONDS WEST 14.08 FEET ALONG SAID BOUNDARY; THENCE NORTH 88 DEGREES 48 MINUTES 00 SECONDS EAST 190.01 FEET TO THE EAST LINE OF THE OWNERS' LAND; THENCE SOUTH 00 DEGREES 42 MINUTES 57 SECONDS EAST 10.00 FEET ALONG SAID EAST LINE OF THE OWNERS' LAND TO THE BOUNDARY OF S.R. 32 AND THE POINT OF BEGINNING AND CONTAINING 0.042 ACRES, MORE OR LESS.

TOGETHER WITH AN EASEMENT FOR INGRESS AND EGRESS AS RECORDED IN INSTRUMENT NUMBER 8919077.

ALSO EXCEPT THAT PART CONVEYED TO THE STATE OF INDIANA BY WARRANTY DEED RECORDED JULY, 17, 2007 AS INSTRUMENT NO. 2007040165, DESCRIBED AS FOLLOWS:

A PART OF THE SOUTHEAST QUARTER OF THE SOUTHWEST QUARTER OF SECTION 36, TOWNSHIP 19 NORTH, RANGE 3 EAST, HAMILTON COUNTY, INDIANA, AS FOLLOWS:

COMMENCING AT THE SOUTHEAST CORNER OF SAID QUARTER SECTION; THENCE NORTH 89 DEGREES 50 MINUTES 43 SECONDS WEST 576.07 FEET ALONG THE SOUTH LINE OF SAID SECTION TO THE PROLONGED EAST LINE OF THE GRANTOR'S LAND; THENCE NORTH 00 DEGREES 38 MINUTES 07 SECONDS EAST 40.00 FEET ALONG SAID EAST LINE PROLONGED TO THE NORTH BOUNDARY OF S.R. 32 AND THE POINT OF BEGINNING OF THIS DESCRIPTION; THENCE NORTH 89 DEGREES 50 MINUTES 43 SECONDS WEST 189.81 FEET (190.01) FEET BY INSTRUMENT NUMBER 9327322) ALONG THE BOUNDARY OF SAID S.R. 32 TO THE NORTHEASTERN BOUNDARY OF THE INTERSECTION OF SAID S.R. 32 AND SUNPARK DRIVE; THENCE NORTH 44 DEGREES 00 MINUTES 56 SECONDS WEST 14.22 FEET ALONG THE BOUNDARY OF THE INTERSECTION OF SAID S.R. 32 AND SAID SUNPARK DRIVE TO THE EAST BOUNDARY OF SAID SUNPARK DRIVE; THENCE NORTH 00 DEGREES 38 MINUTES 07 SECONDS EAST 249.58 FEET ALONG THE BOUNDARY OF SAID SUNPARK DRIVE; THENCE SOUTH 89 DEGREES 21 MINUTES 40 SECONDS EAST 14.13 FEET; THENCE SOUTH 00 DEGREES 28 MINUTES 20 SECONDS WEST 194.80 FEET; THENCE SOUTH 47 DEGREES 31 MINUTES 04 SECONDS EAST 27.80 FEET; THENCE SOUTH 90 DEGREES 00 MINUTES 00 SECONDS EAST 164.98 FEET TO THE EAST LINE OF GRANTOR'S LAND; THENCE SOUTH 00 DEGREES 38 MINUTES 07 SECONDS WEST 46.59 FEET ALONG SAID EAST LINE TO THE POINT OF BEGINNING AND CONTAINING 0.285 ACRES, MORE OR LESS.

GENERAL NOTES

1.) BASED UPON A SCALED INTERPRETATION OF THE FLOOD INSURANCE RATE MAP (18057C0120F) FOR HAMILTON COUNTY, INDIANA, DATED FEBRUARY 19, 2003, THE SUBJECT PROPERTY IS NOT LOCATED WITHIN A SPECIAL FLOOD HAZARD AREA, AS ESTABLISHED BY THE FEDERAL EMERGENCY MANAGEMENT AGENCY FOR THE NATIONAL FLOOD INSURANCE PROGRAM. THE SUBJECT PROPERTY IS LOCATED WITHIN (UNSHADED) ZONE X (AREAS DETERMINED TO BE OUTSIDE 500-YEAR FLOODPLAIN), FLOOD PLAIN CERTIFICATION IS RESTRICTED TO A REVIEW OF THE FLOOD INSURANCE RATE MAPS (FIRM), AND SHALL NOT BE CONSTRUED AS A CONFIRMATION OR DENIAL OF FLOODING POTENTIAL.

3.) UNDERGROUND UTILITIES WERE LOCATED FROM ABOVE GROUND OBSERVATIONS ONLY AND SHOULD NOT BE CONSIDERED COMPLETE. TO HAVE UNDERGROUND UTILITIES LOCATED, CONTACT THE INDIANA UNDERGROUND PLANT PROTECTION SERVICE AT 1- 800-382-5544.

4.) THE SUBJECT PROPERTY CONTAINS 0 MARKED PARKING SPACES.

5.) PER THE HAMILTON COUNTY GIS WEBSITE, THE WESTFIELD BUSINESS PARK REGULATED (LEGAL) DRAIN IS WITHIN 75 FEET OF THE SUBJECT PROPERTY.

6.) ALL MONUMENTS FOUND IN PERFORMANCE OF THIS SURVEY WERE FOUND FLUSH WITH THE EXISTING GROUND UNLESS OTHERWISE NOTED, AND THE AGE AND ORIGIN OF SAID FOUND MONUMENTS ARE UNKNOWN UNLESS OTHERWISE NOTED.

7.) AS USED IN THIS SURVEY, CERTIFY MEANS TO STATE OR DECLARE A PROFESSIONAL OPINION OF CONDITIONS REGARDING THOSE FACTS OR FINDING WHICH ARE THE SUBJECT OF THE CERTIFICATION AND DOES NOT CONSTITUTE A WARRANTY OR GUARANTEE, EITHER EXPRESS OR IMPLIED. INTERPRETATIONS ARE NOT A PART OF ANY CERTIFICATION.

8.) NO WARRANTY, EITHER EXPRESS OR IMPLIED, IS MADE AS TO THE ACCURACY OR COMPLETENESS OF INFORMATION PROVIDED BY GOVERNMENTAL AUTHORITIES AND / OR THIRD PARTIES, OR AS TO ITS FITNESS FOR ANY PARTICULAR PURPOSE OR USE, INCLUDING BUT NOT LIMITED TO INFORMATION PRESENTED ON UNDERGROUND UTILITIES, FLOOD HAZARD ZONES, FLOODWAY ZONES, WETLANDS, RECORDING INFORMATION, ZONING, AND REGULATED DRAINS. IN NO EVENT WILL WEIHE ENGINEERS, INC., ITS EMPLOYEES, AGENTS, AND / OR ASSIGNS BE LIABLE FOR ANY DAMAGES ARISING OUT OF THE FURNISHING AND / OR USE OF SUCH INFORMATION.

SCHEDULE B SURVEY ITEMS

THIS SURVEY WAS PREPARED UTILIZING INFORMATION CONTAINED IN CHICAGO TITLE INSURANCE COMPANY TITLE FILE NO. 201426771, DATED JUNE 3, 2014.

10 PERMANENT EXTINGUISHMENT OF ALL RIGHTS AND EASEMENTS OF INGRESS AND EGRESS TO, FROM AND ACROSS S.R. 32. *SHOWN HEREON.*

11 COVENANTS FOR HAMILTON WEST INVESTMENTS, SUN PARK, PER INSTRUMENT NO. 9007079. *AFFECTS SUBJECT PROPERTY, NOT PLOTTABLE*

12 EASEMENT FOR PUBLIC DRAINAGE PER INSTRUMENT NO. 9007080. *AFFECTS SUBJECT PROPERTY, NOT PLOTTABLE*

13 RECIPROCAL EASEMENT AGREEMENT PER INSTRUMENT NO. 9007082. *AFFECTS SUBJECT PROPERTY, NOT PLOTTABLE*

14 DEDICATION OF ROADWAY PER INSTRUMENT NO. 9105299. *SHOWN HEREON*

15 DEDICATION OF ROADWAY PER INSTRUMENT NO. 9121823. *DEDICATION IS NORTH OF SUBJECT PROPERTY*

16 COVENANT FOR RESERVATION OF ACCESS AND USE BY HAMILTON WEST INVESTMENTS PER INSTRUMENT NO. 9013283. *AFFECTS SUBJECT PROPERTY, NOT PLOTTABLE*

VICINITY MAP

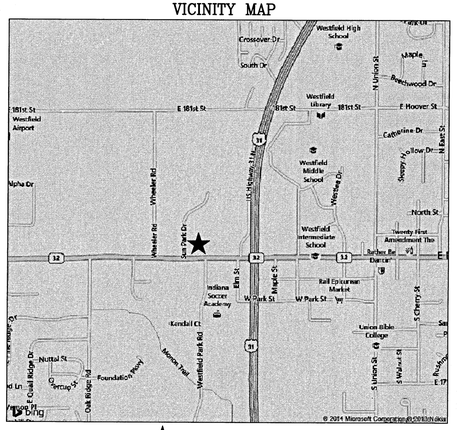

★ PROJECT LOCATION

N
W E
S
1" = 20'
0 10 20 40

LEGEND

- CUT 'X' FOUND/SET
- HARRISON MONUMENT FOUND
- IRON PIN FOUND/SET
- WATER METER
- WATER VALVE
- GAS METER
- GAS VALVE
- SIGN
- HANDICAPPED SPACE
- BRASS PLUG FOUND/SET
- MONUMENT
- ELECTIC CONTROL BOX
- ELECTRIC METER
- LIGHT STAND
- TRANSFORMER
- TELEPHONE JUNCTION BOX
- SQUARE INLET
- SANITARY SEWER MANHOLE
- CLEANOUT
- TELEPHONE PEDESTAL
- CURB INLET
- CHAIN LINK FENCE
- UNDERGROUND GAS
- UNDERGROUND ELECTRIC
- UNDGERGROUND TELEPHONE
- OVERHEAD UTILITY
- FLOW LINE

HCSO HAMILTON COUNTY SURVEYOR'S OFFICE
(M) MEASURED DIMENSION
(D) DEED DIMENSION

WEIHE ENGINEERS
10505 N. College Avenue
Indianapolis, Indiana 46280
weihe.net
317 | 846 - 6611
800 | 452 - 6408
317 | 843 - 0546 fax
Land Surveying | Civil Engineering
Landscape Architecture
ALLAN H. WEIHE, P.E., L.S. - FOUNDER

PROJECT NO.: W140219
DWG. NAME: W140219SV
FIELD BY: ES
DRAWN BY: TB
CHECKED BY: TB
DATE: 6-24-14

REVISIONS AND ISSUES | BY | DATE

PREPARED FOR:
HENKE DEVELOPMENT
SUN PARK DRIVE AND SR 32, WESTFIELD, INDIANA

ALTA/ACSM LAND TITLE SURVEY
SE/4 SEC 36-T19N-R3E, HAMILTON CNTY, INDIANA

SHEET NO. 1 OF 1
PROJECT NO. W140219

LOCATION: W:\2014\W140219\Surveying\W140219 ALTA.dwg
LAYOUT: Layout1
DATE/TIME: September 25, 2014 - 1:18pm
PLOTTED BY: klampert

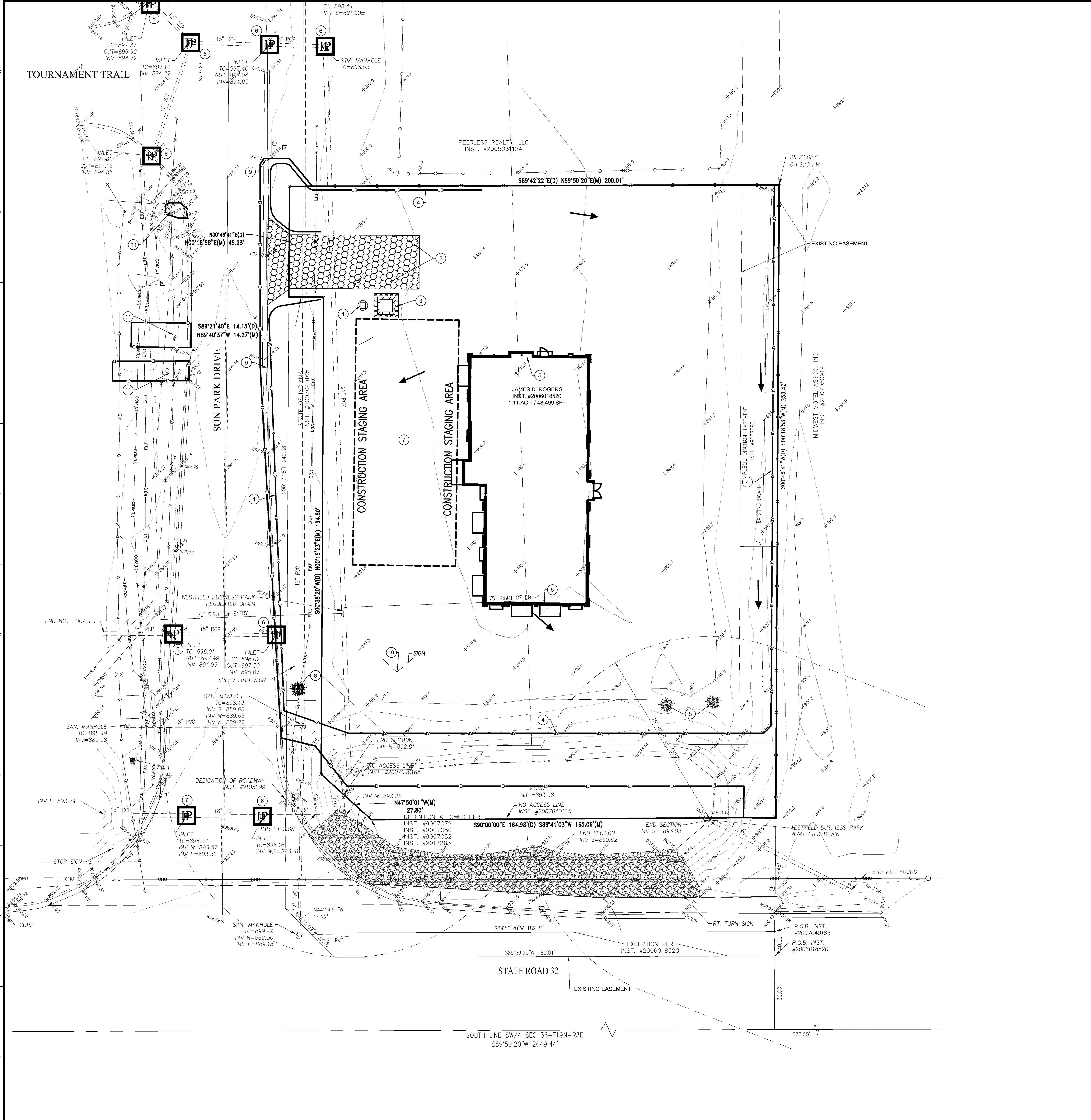

SITE PREPARATION / SWPPP PHASE I NOTES

1. INSTALL PERMIT POSTING AREA. 4" PVC TUBE WITH END CAPS ATTACHED TO PROJECT CONSTRUCTION SIGN TO CONTAIN APPROVED CONSTRUCTION DRAWINGS AND PERMITS FOR INSPECTORS.
2. INSTALL CONSTRUCTION ENTRANCE. REFER TO DETAIL ON SHEET C103
3. INSTALL CONCRETE WASHOUT. REFER TO DETAIL ON SHEET C104
4. INSTALL SILT FENCE. REFER TO DETAIL ON SHEET C104
5. LIMITS OF PROPOSED BUILDING
6. INSTALL DROP INLET PROTECTION ON ALL INLETS LOCATED WITHIN THE RIGHT OF WAY.
7. CONSTRUCTION DUMPSTER, FUELING AREA, FUEL TANK AND PORT-O-LET TO BE LOCATED AND NOTED ONSITE BY CONTRACTOR
8. REMOVE TREE
9. SAWCUT AND REMOVE CURB FOR ENTRY DRIVES
10. REMOVE EXISTING SIGN
11. DEMOLISH SIDEWALK TO NEAREST JOINT AS NEEDED FOR INSTALLATION OF UTILITIES PROPOSED ON SHEET C800. CONSTRUCT SIDEWALK BACK TO ORIGINAL OR BETTER CONDITION WHERE NEEDED. COORDINATE WITH UTILITY COMPANY INSTALLING PROPOSED UTILITY.

LINE TYPES

- UNDERGROUND GAS
- UNDERGROUND WATER
- AERIAL ELECTRIC
- UNDERGROUND ELECTRIC
- UNDERGROUND COMMUNICATIONS
- AERIAL COMMUNICATIONS
- UNDERGROUND FIBER OPTIC
- AERIAL FIBER OPTIC CABLE
- OVERHEAD UTILITY
- FORCE MAIN
- SANITARY SEWER
- STORM SEWER
- RIGHT OF WAY LINE
- CHAIN LINK FENCE
- BOARD FENCE
- WROUGHT IRON FENCE
- FARM FENCE
- GUARD RAIL
- HAND RAIL
- SILT FENCE
- BUILDING SETBACK LINE
- BOUNDARY LINE
- FLOW LINE
- SECTION LINE
- INDEX CONTOUR
- INTERMEDIATE CONTOUR

SWPPP 1 LEGEND

- IP - INLET PROTECTION - USE SUBSURFACE FRAME AND BASKET INLET PROTECTION WITH OVERFLOW CAPABILITY, UNLESS OTHERWISE NOTED
- CONSTRUCTION ENTRANCE
- STAGING AREA
- POSTING AREA - 4" PVC TUBE WITH END CAPS ATTACHED TO PROJECT CONSTRUCTION SIGN TO CONTAIN APPROVED CONSTRUCTION DRAWINGS AND PERMITS FOR INSPECTORS.
- CONCRETE WASHOUT
- SILT FENCE
- LIMITS OF DISTURBANCE
- DIRECTION OF OVERLAND FLOW

EROSION CONTROL SPECIFICATIONS

1. THIS PLAN IS DESIGNED AS AN ATTEMPT TO PREVENT ANY AND ALL SEDIMENT FROM LEAVING THE CONSTRUCTION SITE BY WAY OF EROSION. IF EROSION OF SEDIMENT FROM THE SITE IS TAKING PLACE, THE CONTRACTOR AND/OR OWNER SHALL TAKE PREVENTATIVE ACTION IMMEDIATELY. THE ENGINEER SHALL BE CONSULTED IN THE EVENT THIS HAPPENS.
2. TEMPORARY SEEDING IS TO BE APPLIED TO ANY DISTURBED AREA THAT WILL REMAIN UNALTERED IN EXCESS OF 15 DAYS.
3. PERMANENT SEEDING IS TO BE APPLIED IMMEDIATELY TO AREAS THAT HAVE ACHIEVED FINAL AND FINISHED GRADE.
4. PRESERVE EXISTING VEGETATION ON THE SITE WHENEVER AND WHEREVER POSSIBLE TO PREVENT TOPSOIL EROSION.
5. ALL SEDIMENT CAPTURING MEASURES SHALL BE IMPLEMENTED PRIOR TO THE DISTURBANCE OF THE CONSTRUCTION AREA THEY ARE INTENDED TO SERVICE. ALL EROSION CONTROL MEASURES PROPOSED ARE TO BE PROPERLY MAINTAINED TO CONTINUE THEIR EFFECTIVENESS.
6. IF GRADING OCCURS DURING THE MONTHS OF DECEMBER, JANUARY OR FEBRUARY DORMANT SEEDING PROCEDURES SHALL BE USED.
7. DURING DRY WEATHER, KEEP LAWNS WATERED WITH SPRINKLERS OR OTHER APPROVED METHODS. RESEED ANY AREAS NOT GERMINATING OR DAMAGED AT INTERVALS AS MAY BE REQUIRED ACCORDING TO SEASONAL CONDITION AND/OR CONSTRUCTION ACTIVITY. WATER GRASS AND EXECUTE NECESSARY WEEDING UNTIL FULL STAND OF GRASS HAS BEEN OBTAINED.
8. THE IMPLEMENTATION AND MAINTENANCE OF THE EROSION CONTROL IS THE SOLE RESPONSIBILITY OF THE CONTRACTOR AND/OR OWNER.
9. IT SHALL BE THE CONTRACTOR'S AND/OR OWNER'S RESPONSIBILITY TO MINIMIZE SEDIMENTATION (FROM ON-SITE CONSTRUCTION ACTIVITIES) FROM BEING DEPOSITED ONTO ADJACENT PROPERTIES AND RECEIVING STREAMS/DITCHES IN STRICT COMPLIANCE WITH "RULE 5" (327 IAC 15-5, CONSTRUCTION ACTIVITY STORM WATER RUNOFF CONTROL). IT SHALL ALSO BE THE CONTRACTOR'S AND/OR OWNER'S RESPONSIBILITY TO OBTAIN ANY APPROVALS REQUIRED FROM THE LOCAL AUTHORITY AND TO SUBMIT A COMPLETE NOTICE OF INTENT LETTER TO THE OFFICE OF WATER MANAGEMENT, INDIANA DEPARTMENT OF ENVIRONMENTAL MANAGEMENT PRIOR TO ANY CONSTRUCTION ACTIVITY.
10. FOR SEASONAL VARIATIONS - SEE SEASONAL SOIL PROTECTION CHART IN THESE PLANS.

GENERAL NOTES

1. IT SHALL BE THE RESPONSIBILITY OF THE CONTRACTOR TO VERIFY WITH THE OWNER DURING BIDDING AND DURING CONSTRUCTION ACTIVITIES ALL ITEMS TO BE REMOVED. IT IS THE RESPONSIBILITY OF THE CONTRACTOR TO REMOVE ANY MATERIALS AND/OR STRUCTURES NOT LOCATED ON THIS SURVEY FOR THE INSTALLATION OF THE NEW WORK.
2. IT SHALL BE THE RESPONSIBILITY OF THE CONTRACTOR TO VERIFY ALL EXISTING UTILITIES PERTAINING TO THEIR PHASE OF WORK, AND TO VERIFY WHICH UTILITIES WILL BE REMOVED BY UTILITY COMPANY. ANY AND ALL UTILITIES NOT REMOVED BY THE UTILITY COMPANY SHALL BE REMOVED BY THE CONTRACTOR.
3. UTILITIES ARE SHOWN TO BE APPROXIMATE AND SHALL BE RELOCATED AND/OR CAPPED AND ABANDONED BEFORE CONSTRUCTION AT NO ADDITIONAL COST TO THE OWNER.
4. ALL DEMOLITION MATERIAL AND SALVAGEABLE MATERIAL IS THE PROPERTY OF THE DEMOLITION CONTRACTOR AND SHALL BE PROPERLY DISPOSED OF OFF THE SITE.
5. SLABS ON GRADE MUST BE REMOVED COMPLETELY AND TAKEN OFF THE SITE.
6. ALL UTILITIES MUST REMAIN ACTIVE FOR AREA TENANTS THAT ARE REMAINING. NO UTILITY SERVICE SHALL BE INTERRUPTED DURING THE CONSTRUCTION PROCESS.
7. BEARINGS, DIMENSIONS, AND EASEMENTS ARE SHOWN FOR REFERENCE ONLY. SEE RECORD SURVEYS AND PLATS FOR EXACT INFORMATION.
8. IF THERE ARE ANY QUESTIONS CONCERNING THIS DEMOLITION PLAN, PLEASE CONTACT THE ENGINEER BEFORE CONTINUING WORK.

   WEIHE ENGINEERS, INC.
   10505 NORTH COLLEGE AVENUE
   INDIANAPOLIS, INDIANA 42680
   (317) 846-6611 OR
   TOLL FREE 1-800-452-6408
9. ADDITIONAL EROSION CONTROL MEASURES MAY BE REQUIRED IN THE FIELD BY CITY OF WESTFIELD INSPECTOR.

EROSION CONTROL NOTES

1. ALL DISTURBED AREAS SHALL BE SODDED OR SEEDED, EXCEPT BUILDING PAD AND LANDSCAPE BEDS. SEE LANDSCAPE PLANS FOR LOCATION OF LANDSCAPE BEDS.
2. INSTALL SILT FENCE ALONG ALL DOWNSTREAM SLOPES. SILT FENCE TO FOLLOW CONTOUR.
3. THERE SHALL BE NO DIRT, DEBRIS OR STORAGE OF MATERIAL IN THE STREET.

EXISTING AREAS

TOTAL SITE	=	1.11	AC.
DISTURBED	=	1.11	AC.
PERVIOUS	=	1.11	AC.
IMPERVIOUS	=	0.00	AC.

ORIGINATING BENCHMARK

A STANDARD DISK STAMPED HAM G11 SET IN THE TOP OF THE SOUTHWEST CONCRETE WING OF A CULVET ALONG STATE ROAD 32 ABOUT 0.37 MILES EAST OF U.S. 31.
ELEVATION=876.19 (NAVD 88)

TBM:
CUT "X" ON EAST BON BOLT OF FIRE HYDRANT AT THE NORTHWEST INTERSECTION OF STATE ROAD 32 AND SUN PARK DRIVE.
ELEVATION=900.33 (NAVD 88)

CONTACT PERSON FOR EROSION CONTROL & SEDIMENT PRACTICES

WEIHE ENGINEERS, INC.
10505 N. COLLEGE AVE.
INDIANAPOLIS, IN 46268
TELEPHONE: (317) 846-6611
FAX: (317) 843-0546
EMAIL: PARKERF@WEIHE.NET
CONTACT PERSON: FRED PARKER, CPESC

SCALE: 1" = 20'

0 10 20 40

Know what's **below.**
Call before you dig.
Within Indiana Call
811 or 800-382-5544
24 Hours a Day, 7 Days a Week.
PER INDIANA STATE LAW IC 8-1-26. IT IS AGAINST THE LAW TO EXCAVATE WITHOUT NOTIFYING THE UNDERGROUND LOCATION SERVICE TWO (2) WORKING DAYS BEFORE COMMENCING WORK.

10505 N. College Avenue
Indianapolis, Indiana 46280
weihe.net
317 | 846 - 6611
800 | 452 - 6408
317 | 843 - 0546 fax
ALLAN H. WEIHE, P.E., L.S. - FOUNDER

WEIHE ENGINEERS
Land Surveying | Civil Engineering
Landscape Architecture

PROJECT NO.: W15.0316
DWG NAME: w150316-C101 swppp1.dwg
DESIGNED BY: RLW
DRAWN BY: RLW
CHECKED BY: BJS
DATE: 01.29.2016

REVISIONS AND ISSUES	DATE	BY
SUBMITTED FOR COUNTY SURVEYOR REVIEW	10.16.2015	BJS
ISSUED FOR TAC REVIEW	01.29.2016	BJS

STEVEN SCOTT RUCKER REGISTERED PE11300279 STATE OF INDIANA PROFESSIONAL ENGINEER
NOT FOR CONSTRUCTION
STEVEN SCOTT RUCKER P.E. 11300279

PREPARED FOR: Culver's
of WESTFIELD
17651 SUN PARK DRIVE, WESTFIELD, IN 46074

STORMWATER POLLUTION PREVENTION PLAN PHASE 1

Part of SW/4, Section 36, Township 19 North, Range 3 East, Washington Township, Hamilton County, Indiana

SHEET NO. C100
PROJECT NO. W15.0316

LOCATION: H:\2015\w150316\Engineering\design\conset\w150316-C101 swppp1.dwg
LAYOUT: C100
DATE/TIME: January 28, 2016 - 2:40pm
PLOTTED BY: schoeffb

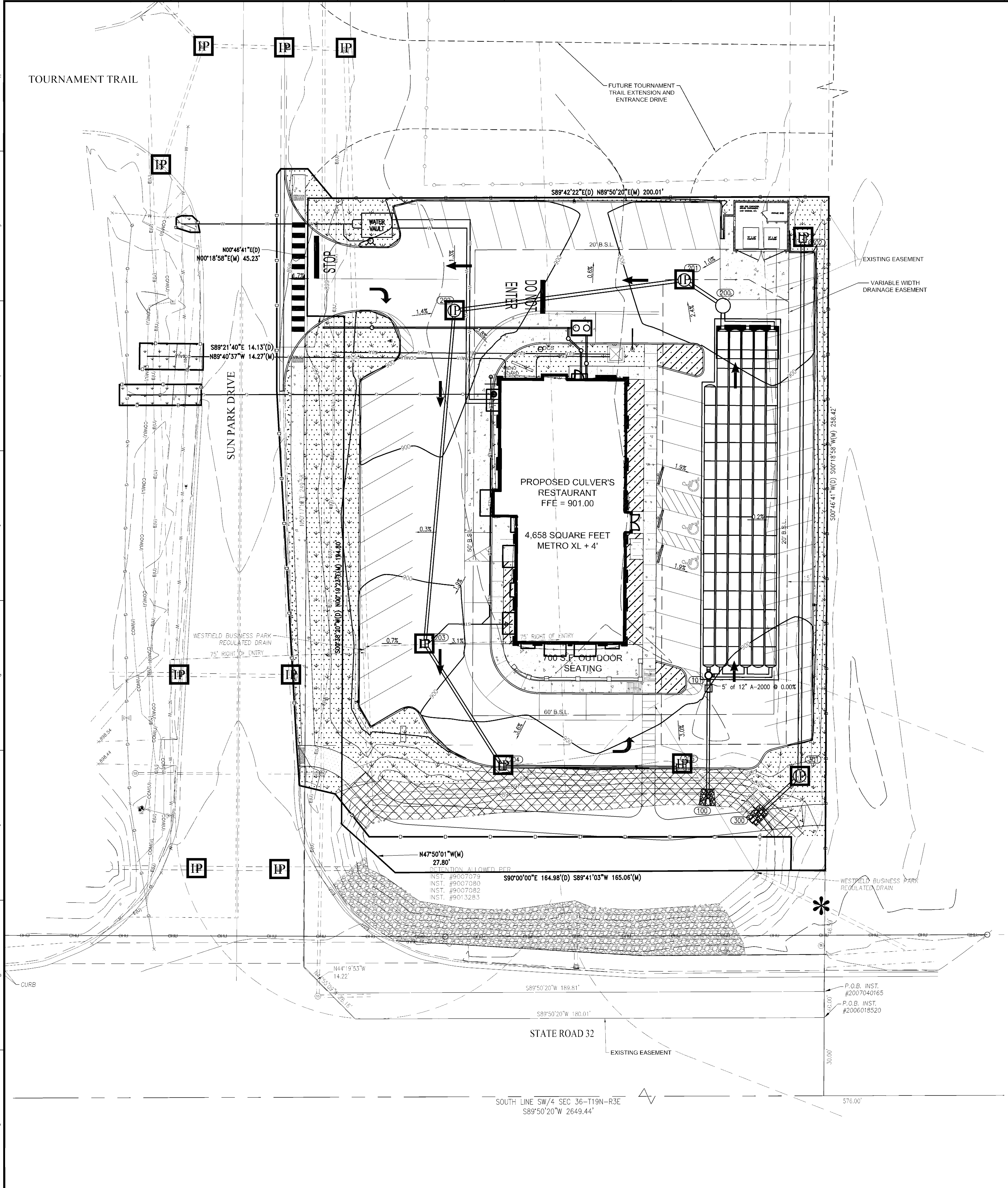

EROSION CONTROL SPECIFICATIONS

1. THIS PLAN IS DESIGNED AS AN ATTEMPT TO PREVENT ANY AND ALL SEDIMENT FROM LEAVING THE CONSTRUCTION SITE BY WAY OF EROSION. IF EROSION OF SEDIMENT FROM THE SITE IS TAKING PLACE, THE CONTRACTOR AND/OR OWNER SHALL TAKE PREVENTATIVE ACTION IMMEDIATELY. THE ENGINEER SHALL BE CONSULTED IN THE EVENT THIS HAPPENS.
2. TEMPORARY SEEDING IS TO BE APPLIED TO ANY DISTURBED AREA THAT WILL REMAIN UNALTERED IN EXCESS OF 15 DAYS.
3. PERMANENT SEEDING IS TO BE APPLIED IMMEDIATELY TO AREAS THAT HAVE ACHIEVED FINAL AND FINISHED GRADE.
4. PRESERVE EXISTING VEGETATION ON THE SITE WHENEVER AND WHEREVER POSSIBLE TO PREVENT TOPSOIL EROSION.
5. ALL SEDIMENT CAPTURING MEASURES SHALL BE IMPLEMENTED PRIOR TO THE DISTURBANCE OF THE CONSTRUCTION AREA THEY ARE INTENDED TO SERVICE. ALL EROSION CONTROL MEASURES PROPOSED ARE TO BE PROPERLY MAINTAINED TO CONTINUE THEIR EFFECTIVENESS.
6. IF GRADING OCCURS DURING THE MONTHS OF DECEMBER, JANUARY OR FEBRUARY DORMANT SEEDING PROCEDURES SHALL BE USED.
7. DURING DRY WEATHER, KEEP LAWNS WATERED WITH SPRINKLERS OR OTHER APPROVED METHODS. RESEED ANY AREAS NOT GERMINATING OR DAMAGED AT INTERVALS AS MAY BE REQUIRED ACCORDING TO SEASONAL CONDITION AND/OR CONSTRUCTION ACTIVITY. WATER GRASS AND EXECUTE NECESSARY WEEDING UNTIL FULL STAND OF GRASS HAS BEEN OBTAINED.
8. THE IMPLEMENTATION AND MAINTENANCE OF THE EROSION CONTROL IS THE SOLE RESPONSIBILITY OF THE CONTRACTOR AND/OR OWNER.
9. IT SHALL BE THE CONTRACTOR'S AND/OR OWNER'S RESPONSIBILITY TO MINIMIZE SEDIMENTATION (FROM ON-SITE CONSTRUCTION ACTIVITIES) FROM BEING DEPOSITED ONTO ADJACENT PROPERTIES AND RECEIVING STREAMS/DITCHES IN STRICT COMPLIANCE WITH "RULE 5" (327 IAC 15-5, CONSTRUCTION ACTIVITY STORM WATER RUNOFF CONTROL). IT SHALL ALSO BE THE CONTRACTOR'S AND/OR OWNER'S RESPONSIBILITY TO OBTAIN ANY APPROVALS REQUIRED FROM THE LOCAL AUTHORITY AND TO SUBMIT A COMPLETE NOTICE OF INTENT LETTER TO THE OFFICE OF WATER MANAGEMENT, INDIANA DEPARTMENT OF ENVIRONMENTAL MANAGEMENT PRIOR TO ANY CONSTRUCTION ACTIVITY.
10. FOR SEASONAL VARIATIONS - SEE SEASONAL SOIL PROTECTION CHART IN THESE PLANS.
11. PORTABLE TOILETS MUST BE ANCHORED.
12. THIS PLAN TO BE USED FOR EROSION CONTROL PURPOSES ONLY. ADDITIONAL EROSION CONTROL MEASURES MAY BE REQUIRED IN THE FIELD BY THE INSPECTOR.
13. THIS PLAN INDICATES EROSION CONTROL MEASURES REQUIRED AFTER SOIL STRIPPING AND PAD BUILDING HAS TAKEN PLACE. COORDINATE WITH DEVELOPER FOR MEASURES REQUIRED UNTIL PROPERTY TURNED OVER FOR DEVELOPMENT. COORDINATE WITH SOIL CONSERVATION DISTRICT REPRESENTATIVE FOR ANY OTHER MEASURES REQUIRED DUE TO SITE CONDITIONS.

EROSION CONTROL NOTES

1. ALL DISTURBED AREAS SHALL BE SODDED OR SEEDED, EXCEPT BUILDING PAD AND LANDSCAPE BEDS. SEE LANDSCAPE PLANS FOR LOCATION OF LANDSCAPE BEDS.
2. INSTALL SILT FENCE ALONG ALL DOWNSTREAM SLOPES. SILT FENCE TO FOLLOW CONTOUR.
3. THERE SHALL BE NO DIRT, DEBRIS OR STORAGE OF MATERIAL IN THE STREET.

GENERAL NOTES

1. IT SHALL BE THE RESPONSIBILITY OF THE CONTRACTOR TO VERIFY WITH THE OWNER DURING BIDDING AND DURING CONSTRUCTION ACTIVITIES ALL ITEMS TO BE REMOVED. IT IS THE RESPONSIBILITY OF THE CONTRACTOR TO REMOVE ANY MATERIALS AND/OR STRUCTURES NOT LOCATED ON THIS SURVEY FOR THE INSTALLATION OF THE NEW WORK.
2. IT SHALL BE THE RESPONSIBILITY OF THE CONTRACTOR TO VERIFY ALL EXISTING UTILITIES PERTAINING TO THEIR PHASE OF WORK, AND TO VERIFY WHICH UTILITIES WILL BE REMOVED BY UTILITY COMPANY. ANY AND ALL UTILITIES NOT REMOVED BY THE UTILITY COMPANY SHALL BE REMOVED BY THE CONTRACTOR.
3. UTILITIES ARE SHOWN TO BE APPROXIMATE AND SHALL BE RELOCATED AND/OR CAPPED AND ABANDONED BEFORE CONSTRUCTION AT NO ADDITIONAL COST TO THE OWNER.
4. ALL DEMOLITION MATERIAL AND SALVAGEABLE MATERIAL IS THE PROPERTY OF THE DEMOLITION CONTRACTOR AND SHALL BE PROPERLY DISPOSED OF OFF THE SITE.
5. SLABS ON GRADE MUST BE REMOVED COMPLETELY AND TAKEN OFF THE SITE.
6. ALL UTILITIES MUST REMAIN ACTIVE FOR AREA TENANTS THAT ARE REMAINING. NO UTILITY SERVICE SHALL BE INTERRUPTED DURING THE CONSTRUCTION PROCESS.
7. BEARINGS, DIMENSIONS, AND EASEMENTS ARE SHOWN FOR REFERENCE ONLY. SEE RECORD SURVEYS AND PLATS FOR EXACT INFORMATION.
8. IF THERE ARE ANY QUESTIONS CONCERNING THIS DEMOLITION PLAN, PLEASE CONTACT THE ENGINEER BEFORE CONTINUING WORK.

   WEIHE ENGINEERS, INC.
   10505 NORTH COLLEGE AVENUE
   INDIANAPOLIS, INDIANA 42680
   (317) 846-6611 OR
   TOLL FREE 1-800-452-6408
9. ADDITIONAL EROSION CONTROL MEASURES MAY BE REQUIRED IN THE FIELD BY CITY OF WESTFIELD INSPECTOR.

LAND DESCRIPTION

PART OF THE SOUTHEAST QUARTER OF THE SOUTHWEST QUARTER OF SECTION 36, TOWNSHIP 19 NORTH, RANGE 3 EAST IN HAMILTON COUNTY, INDIANA, DESCRIBED AS FOLLOWS:

COMMENCING AT THE SOUTHEAST CORNER OF SAID QUARTER QUARTER SECTION; THENCE ALONG THE SOUTH LINE THEREOF NORTH 89 DEGREES 42 MINUTES 22 SECONDS WEST 576.00 FEET; THENCE PARALLEL WITH THE EAST LINE OF SAID QUARTER QUARTER SECTION NORTH 00 DEGREES 46 MINUTES 41 SECONDS EAST 30.00 FEET TO THE POINT OF BEGINNING; THENCE PARALLEL WITH THE SOUTH LINE OF SAID QUARTER QUARTER SECTION NORTH 89 DEGREES 42 MINUTES 22 SECONDS WEST 180.01 FEET TO THE EASTERLY RIGHT OF WAY LINE OF AN ACCESS ROAD; THENCE ALONG SAID EASTERLY LINE NORTH 44 DEGREES 27 MINUTES 51 SECONDS WEST 28.16 FEET; THENCE NORTH 00 DEGREES 46 MINUTES 41 SECONDS EAST 295.01 FEET; THENCE SOUTH 89 DEGREES 42 MINUTES 22 SECONDS EAST 200.01 FEET; THENCE SOUTH 00 DEGREES 46 MINUTES 41 SECONDS WEST 315.01 FEET TO THE PLACE OF BEGINNING.

EXCEPT:

A PART OF THE SOUTHEAST QUARTER OF THE SOUTHWEST QUARTER OF SECTION 36, TOWNSHIP 19 NORTH, RANGE 3 EAST, HAMILTON COUNTY, INDIANA, DESCRIBED AS FOLLOWS:

COMMENCING AT THE SOUTHEAST CORNER OF SAID QUARTER SECTION; THENCE SOUTH 88 DEGREES 48 MINUTES 00 SECONDS WEST 576.00 FEET ALONG THE SOUTH LINE OF SAID QUARTER-QUARTER SECTION; THENCE NORTH 00 DEGREES 42 MINUTES 57 SECONDS WEST 30.00 FEET TO THE NORTH BOUNDARY OF S.R. 32 AND THE POINT OF BEGINNING OF THIS DESCRIPTION; THENCE SOUTH 88 DEGREES 48 MINUTES 00 SECONDS WEST 180.01 FEET ALONG THE BOUNDARY OF SAID S.R. 32; THENCE NORTH 45 DEGREES 57 MINUTES 29 SECONDS WEST 14.08 FEET ALONG SAID BOUNDARY; THENCE NORTH 88 DEGREES 48 MINUTES 00 SECONDS EAST 190.01 FEET TO THE EAST LINE OF THE OWNERS' LAND; THENCE SOUTH 00 DEGREES 42 MINUTES 57 SECONDS EAST 10.00 FEET ALONG SAID EAST LINE OF THE OWNERS' LAND TO THE BOUNDARY OF S.R. 32 AND THE POINT OF BEGINNING AND CONTAINING 0.042 ACRES, MORE OR LESS.

TOGETHER WITH AN EASEMENT FOR INGRESS AND EGRESS AS RECORDED IN INSTRUMENT NUMBER 8919077.

ALSO EXCEPT THAT PART CONVEYED TO THE STATE OF INDIANA BY WARRANTY DEED RECORDED JULY, 17, 2007 AS INSTRUMENT NO. 2007040165, DESCRIBED AS FOLLOWS:

A PART OF THE SOUTHEAST QUARTER OF THE SOUTHWEST QUARTER OF SECTION 36, TOWNSHIP 19 NORTH, RANGE 3 EAST, HAMILTON COUNTY, INDIANA, AS FOLLOWS:

COMMENCING AT THE SOUTHEAST CORNER OF SAID QUARTER SECTION; THENCE NORTH 89 DEGREES 50 MINUTES 43 SECONDS WEST 576.07 FEET ALONG THE SOUTH LINE OF SAID SECTION TO THE PROLONGED EAST LINE OF THE GRANTOR'S LAND; THENCE NORTH 00 DEGREES 38 MINUTES 07 SECONDS EAST 40.00 FEET ALONG SAID EAST LINE PROLONGED TO THE NORTH BOUNDARY OF S.R. 32 AND THE POINT OF BEGINNING OF THIS DESCRIPTION; THENCE NORTH 89 DEGREES 50 MINUTES 43 SECONDS WEST 189.81 FEET (190.01) FEET BY INSTRUMENT NUMBER 9327322) ALONG THE BOUNDARY OF SAID S.R. 32 TO THE NORTHEASTERN BOUNDARY OF THE INTERSECTION OF SAID S.R. 32 AND SUNPARK DRIVE; THENCE NORTH 44 DEGREES 00 MINUTES 56 SECONDS WEST 14.22 FEET ALONG THE BOUNDARY OF THE INTERSECTION OF SAID S.R. 32 AND SAID SUNPARK DRIVE TO THE EAST BOUNDARY OF SAID SUNPARK DRIVE; THENCE NORTH 00 DEGREES 38 MINUTES 07 SECONDS EAST 249.58 FEET ALONG THE BOUNDARY OF SAID SUNPARK DRIVE; THENCE SOUTH 89 DEGREES 21 MINUTES 40 SECONDS EAST 14.13 FEET; THENCE SOUTH 00 DEGREES 28 MINUTES 20 SECONDS WEST 194.80 FEET; THENCE SOUTH 47 DEGREES 31 MINUTES 04 SECONDS EAST 27.80 FEET; THENCE SOUTH 90 DEGREES 00 MINUTES 00 SECONDS EAST 164.98 FEET TO THE EAST LINE OF GRANTOR'S LAND; THENCE SOUTH 00 DEGREES 38 MINUTES 07 SECONDS WEST 46.59 FEET ALONG SAID EAST LINE TO THE POINT OF BEGINNING AND CONTAINING 0.285 ACRES, MORE OR LESS.

LINE TYPES

- UNDERGROUND GAS
- UNDERGROUND WATER
- AERIAL ELECTRIC
- UNDERGROUND ELECTRIC
- UNDERGROUND COMMUNICATIONS
- AERIAL COMMUNICATIONS
- UNDERGROUND FIBER OPTIC
- AERIAL FIBER OPTIC CABLE
- OVERHEAD UTILITY
- FORCE MAIN
- SANITARY SEWER
- STORM SEWER
- RIGHT OF WAY LINE
- CHAIN LINK FENCE
- BOARD FENCE
- WROUGHT IRON FENCE
- FARM FENCE
- BUILDING SETBACK LINE
- BOUNDARY LINE
- FLOW LINE
- SECTION LINE
- INDEX CONTOUR
- INTERMEDIATE CONTOUR

SWPPP LEGEND

- IP - INLET PROTECTION - USE SUBSURFACE INLET PROTECTION WITH OVERFLOW CAPABILITY
- PERMANENT/TEMPORARY SEEDING USE PLANTING CHART
- EROSION CONTROL BLANKET - USE S150BN BIO-NET AS SUPPLIED BY NORTH AMERICAN GREEN OR APPROVED EQUAL
- LIMITS OF DISTURBANCE (CONSTRUCTION LIMITS)
- SITE DISCHARGE POINT
- MULCH AREA
- RIPRAP

CONTACT PERSON FOR EROSION CONTROL & SEDIMENT PRACTICES

WEIHE ENGINEERS, INC.
10505 N. COLLEGE AVE.
INDIANAPOLIS, IN 46268
TELEPHONE: (317) 846-6611
FAX: (317) 843-0546
EMAIL: PARKERF@WEIHE.NET
CONTACT PERSON: FRED PARKER, CPESC

ORIGINATING BENCHMARK

A STANDARD DISK STAMPED HAM G11 SET IN THE TOP OF THE SOUTHWEST CONCRETE WING OF A CULVET ALONG STATE ROAD 32 ABOUT 0.37 MILES EAST OF U.S. 31.
ELEVATION=876.19 (NAVD 88)

TBM:
CUT "X" ON EAST BON BOLT OF FIRE HYDRANT AT THE NORTHWEST INTERSECTION OF STATE ROAD 32 AND SUN PARK DRIVE.
ELEVATION=900.33 (NAVD 88)

DISTURBED ACREAGE
= 1.11 ± AC.

N W E S

SCALE: 1" = 20'
0 10 20 40

811
Know what's below. Call before you dig.
Within Indiana Call
811 or 800-382-5544
24 Hours a Day, 7 Days a Week.
PER INDIANA STATE LAW IC 8-1-26. IT IS AGAINST THE LAW TO EXCAVATE WITHOUT NOTIFYING THE UNDERGROUND LOCATION SERVICE TWO (2) WORKING DAYS BEFORE COMMENCING WORK.

10505 N. College Avenue
Indianapolis, Indiana 46280
weihe.net
317 | 846 - 6611
800 | 452 - 6408
317 | 843 - 0546 fax
ALLAN H. WEIHE, P.E., L.S. - FOUNDER
WEIHE ENGINEERS
Land Surveying | Civil Engineering
Landscape Architecture

PROJECT NO.:	DWG NAME:	DESIGNED BY:	DRAWN BY:	CHECKED BY:	DATE:
W15.0316	w150316-C102 swppp2.dwg	RLW	RLW	BJS	01.29.2016

REVISIONS AND ISSUES	DATE	BY
SUBMITTED FOR COUNTY SURVEYOR REVIEW	10.16.2015	BJS
ISSUED FOR TAC REVIEW	01.29.2016	BJS

STEVEN SCOTT RUCKER REGISTERED PE11300279 STATE OF INDIANA PROFESSIONAL ENGINEER
APPROVAL PENDING NOT FOR CONSTRUCTION
STEVEN SCOTT RUCKER P.E. 11300279

PREPARED FOR: Culver's of WESTFIELD
17651 SUN PARK DRIVE, WESTFIELD, IN 46074

STORMWATER POLLUTION PREVENTION PLAN PHASE 2

Part of SW/4, Section 36, Township 19 North, Range 3 East, Washington Township, Hamilton County, Indiana

SHEET NO. C101
PROJECT NO. W15.0316

LOCATION: H:\2015\w150316\Engineering\design\conset\w150316-C102 swppp2.dwg
LAYOUT: C101
DATE/TIME: January 28, 2016 - 2:41pm
PLOTTED BY: schoeffb

SECTION A - CONSTRUCTION PLAN ELEMENTS

A1 PLAN INDEX - SEE BELOW
A2 11"x17" PLAT - (REDUCTION OF STORMWATER POLLUTION PREVENTION PLAN TO BE SUBMITTED WITH FULL SIZE PLAN)
A3 PROJECT NARRATIVE - THIS IS A PROPOSED COMMERCIAL DEVELOPMENT ON APPROXIMATELY 1.10 ACRES. THE CONSTRUCTION SHALL CONSIST OF A BUILDING, ASPHALT PARKING, UTILITY EXTENSIONS AND STORMWATER MANAGEMENT.
A4 VICINITY MAP - SEE BOTTOM OF THIS SHEET.
A5 LEGAL DESCRIPTION - SEE SHEET C101 THE STORMWATER POLLUTION PREVENTION PLANS, LAT: 40°02'35"N LONG: 86°08'23"W
A6 LOCATION OF ALL LOTS AND PROPOSED SITE IMPROVEMENTS - SEE STORMWATER POLLUTION PREVENTION PLANS C100 AND C101, ALONG WITH THE REMAINING CONSTRUCTION PLANS FOR DETAILED INFORMATION OF THE VARIOUS ELEMENTS.
A7 HYDROLOGIC UNIT CODE (14 DIGIT) - 05120201090030.
A8 NOTATION OF ANY STATE OR FEDERAL WATER QUALITY PERMITS - IDEM RULE 5 NOTICE OF INTENT
A9 SPECIFIC POINTS WHERE STORMWATER DISCHARGE LEAVES SITE - STORM SEWER NETWORK INTO THE SR 32 RIGHT OF WAY.
A10 LOCATION AND NAME OF WETLANDS, LAKES AND WATER COURSES ON AND ADJACENT TO SITE - THERE IS A WET POND ALONG THE NORTH SIDE OF THE SR 32 RIGHT OF WAY THAT IS PARTIALLY LOCATED ON THE CULVER'S LOT THAT IS CLASSIFIED AS A WETLAND.
A11 IDENTIFICATION OF ALL RECEIVING WATERS - COOL CREEK, GRASSY BRANCH.
A12 IDENTIFICATION OF POTENTIAL DISCHARGE TO GROUND WATER - NOT APPLICABLE.
A13 100 YEAR FLOODPLAINS, FLOODWAYS, AND FLOODWAY FRINGES - THE 100 YEAR ELEVATION FOR THIS LOCATION IS LISTED AS AN ELEVATION OF 896.70.
A14 PRE-CONSTRUCTION AND POST-CONSTRUCTION ESTIMATE OF PEAK DISCHARGE (10 YEAR) - PRE10 = 0.82 CFS, POST10= 1.40 CFS
A15 ADJACENT LANDUSE INCLUDING UPSTREAM WATERSHED - NORTH AND WEST ADJOINERS ARE COMMERCIAL, EAST IS VACANT GROUND AND THE SOUTH IS SR32 ROADWAY.
A16 CONSTRUCTION LIMITS - SEE STORMWATER POLLUTION PREVENTION PLANS C100 AND C101.
A17 IDENTIFICATION OF EXISTING VEGETATIVE COVER - GRASS.
A18 SOILS MAP W/ SOIL DESCRIPTIONS AND LIMITATIONS - SEE TITLE SHEET.
A19 LOCATIONS, SIZE & DIMENSIONS OF PROPOSED STORMWATER SYSTEMS - SEE GRADING, DRAINAGE AND THE STORMWATER POLLUTION PREVENTION PLANS.
A20 PLANS FOR OFF-SITE CONSTRUCTION ACTIVITIES - UTILITY CONNECTIONS WITHIN THE SUN PARK AND SR 32 RIGHT OF WAY.
A21 LOCATIONS OF PROPOSED SOIL STOCKPILES AND/OR BORROW/DISPOSAL AREAS - NOT APPLICABLE. IF A STOCKPILE IS USED, IT WILL REQUIRE SILT FENCING AND SEEDING AS REQUIRED FOR STABILIZATION.
A22 EXISTING SITE TOPOGRAPHY - THE SITE IS RELATIVELY FLAT WITH A CROWN IN THE CENTER OF THE SITE. THE SITE DRAINS BOTH TO THE EAST AND WEST, WHILE SHEET FLOWING TO TEH SOUTH. SEE GRADING, DRAINAGE AND THE STORMWATER POLLUTION PREVENTION PLANS.
A23 PROPOSED FINAL TOPOGRAPHY - THE SITE IS RELATIVELY FLAT WITH THE HARD SURFACE DRAINING TO THE DETENTION PRIOR TO RELEASE INTO THE SR 32 OUTLET. SEE GRADING, DRAINAGE AND THE STORMWATER POLLUTION PREVENTION PLANS.

SECTION B - SWPPP - CONSTRUCTION PHASE

B1 DESCRIPTION OF POTENTIAL POLLUTANT SOURCES - POTENTIAL POLLUTANTS FROM CONSTRUCTION ACTIVITY SUCH AS ASPHALT FROM PAVING; CONCRETE FROM CURBING, SIDEWALKS, OIL, GREASE, ANTIFREEZE, GASOLINE AND DIESEL FUEL FROM CONSTRUCTION EQUIPMENT; SOIL EROSION; FERTILIZER AND PESTICIDES FROM LANDSCAPING AND TRASH SHOULD BE PROPERLY ATTENDED TO TO REDUCE THE CONTAMINANTS FROM ENTERING THE STORM SYSTEM. TRASH SHOULD BE CLEANED UP TO REDUCE CLOGGING OF STORM SYSTEMS AND REDUCE POTENTIAL BACTERIA AND/OR OTHER BIOLOGICAL AGENTS FROM ENTERING IN THE STORM SYSTEM.
B2 SEQUENCE DESCRIBING STORMWATER QUALITY MEASURE IMPLEMENTATION RELATIVE TO LAND DISTURBING ACTIVITIES -
1. A PRE-CONSTRUCTION MEETING WITH THE CITY OF WESTFIELD IS REQUIRED PRIOR TO THE COMMENCEMENT OF ANY EARTHWORK. ADDITIONALLY, IDEM IS REQUIRED TO BE CONTACTED AT LEAST 48 HOURS PRIOR TO CONSTRUCTION.
2. CONSTRUCTION ENTRANCE - REMOVE EXISTING CURB, STRIP TOPSOIL AND PLACE STONE AT ACCESS POINT OFF OF SUN PARK DRIVE.
3. INSTALL SILT FENCING AND ALL OTHER EROSION CONTROL MEASURES PRIOR TO ANY EARTH MOVING.
4. EARTHWORK - STRIP TOPSOIL, BEGIN ROUGH GRADING AND PREPARE BUILDING PAD AND ROUGH GRADE.
5. STORM SEWER - INSTALL STORM SEWER SYSTEM AND CORRESPONDING INLET PROTECTION
6. SANITARY SEWER - INSTALL SANITARY SEWER SYSTEM
7. FINISH GRADING AND PERMANENT EROSION CONTROL - FINISH GRADE AND PERMANENTLY SEED ALL PROPERTY PERIMETER AREAS. FINISH GRADE ROAD.
8. CURBS - INSTALL CURBS
9. UTILITIES - COORDINATE INSTALLATION OF ALL UTILITIES, INCLUDING WATER.
10. PAVEMENT - INSTALL STONE, BASE COURSES AND FINISHED GRADES FOR ENTRY DRIVE/SIDEWALKS.
11. CLEANUP - CONTRACTOR SHALL SPOIL ALL EXCESS MATERIALS, REGRADE AND STABILIZE ALL AREAS DISTURBED BY UTILITY INSTALLATIONS AND RESEED.
12. FINAL LANDSCAPING - INSTALL FINAL LANDSCAPING.
B3 CONSTRUCTION ENTRANCE - SEE STORMWATER POLLUTION PREVENTION PLAN AND SEE DETAIL WITHIN THE CONSTRUCTION DRAWINGS.
B4 SEDIMENT CONTROL PLAN FOR SHEET FLOW AREAS - SEE STORMWATER POLLUTION PREVENTION DETAILS ON SHEETS C102 THROUGH C105.
B5 SEDIMENT CONTROL PLAN FOR CONCENTRATED FLOW AREAS - NOT APPLICABLE.
B6 STORM SEWER INLET PROTECTION MEASURE LOCATIONS AND SPECS - SEE STORMWATER POLLUTION PREVENTION DETAILS ON SHEETS C102 THROUGH C105.
B7 RUNOFF CONTROL MEASURES - NOT APPLICABLE.
B8 STORM WATER OUTLET PROTECTION SPECS - SEE STORMWATER POLLUTION PREVENTION DETAILS ON SHEETS C102 THROUGH C105.
B9 GRADE STABILIZATION STRUCTURE LOCATIONS AND SPECS - SEE STORMWATER POLLUTION PREVENTION DETAILS ON SHEETS C102 THROUGH C105.
B10 STORMWATER QUALITY CONSTRUCTION DETAILS - SEE STORMWATER POLLUTION PREVENTION DETAILS ON SHEETS C102 THROUGH C105, AND WATER QUALITY UNIT DETAIL ON SHEET C604.
B11 TEMPORARY SURFACE STABILIZATION METHOD FOR EACH SEASON - SEE SEASONAL SOIL PROTECTION CHART.
B12 PERMANENT SURFACE STABILIZATIONS - SEE SEASONAL SOIL PROTECTION CHART.
B13 MATERIAL HANDLING AND SPILL PREVENTION PLAN - POTENTIAL POLLUTANTS FROM CONSTRUCTION ACTIVITY SUCH AS ASPHALT FROM PAVING; CONCRETE FROM CURBING, SIDEWALKS. A CONCRETE WASHOUT AREA HAS BEEN DESIGNATED OIL, GREASE, ANTIFREEZE, GASOLINE AND DIESEL FUEL FROM CONSTRUCTION EQUIPMENT. IF THERE IS A SPILL FROM ONE OF THESE, IMMEDIATE CLEANUP SHOULD OCCUR; SOIL EROSION; FERTILIZER AND PESTICIDES FROM LANDSCAPING AND TRASH SHOULD BE PROPERLY ATTENDED TO TO REDUCE THE CONTAMINANTS FROM ENTERING THE STORM SYSTEM. TRASH SHOULD BE CLEANED UP TO REDUCE CLOGGING OF STORM SYSTEMS AND REDUCE POTENTIAL BACTERIA AND/OR OTHER BIOLOGICAL AGENTS FROM ENTERING IN THE STORM SYSTEM. SHALL MEET THE REQUIREMENTS OF IAC 2-6.1. FOLLOW MATERIAL SAFETY DATA SHEET (MSDS) GUIDELINES FOR CONTAMINANTS PRESENT ON SITE.
B14 MONITORING AND MAINTENANCE GUIDELINES FOR EACH STORMWATER QUALITY MEASURE - INSPECT ALL EROSION CONTROL AND STORMWATER QUALITY MEASURES WEEKLY AND AFTER EACH STORM EVENT OR HEAVY USE. REPAIR/REPLACE ANY COMPROMISED OR FAILED MEASURE AS REQUIRED. MORE SPECIFIC GUIDELINES ARE INCLUDED ON INDIVIDUAL DETAILS.
B15 EROSION & SEDIMENT CONTROL SPECS - THESE ARE LOCATED ON THE VARIOUS DETAILS AND WITHIN THE SWPPP CONSTRUCTION DRAWINGS, AND CITY OF WESTFIELD STANDARD DETAILS.
B16 SEDIMENT CONTROL ASSOCIATED WITH DEWATERING AND DIRECTIONAL BORING OPERATIONS - IN THE EVENT THAT DEWATERING IS REQUIRED ON SITE, PROVIDE SEDIMENT AND OIL CONTAINMENT WITH THE USE OF THE ULTRA DEWATERING BAG, PART #9724-O/S AS PROVIDED BY ULTRATECH INTERNATIONAL, INC. AND SUPPLIED BY D2 LAND & WATER RESOURCES. REFER TO MANUFACTURER SPECIFICATIONS FOR ALTERNATE SIZES OF BAGS IF NEEDED. ALTERNATE EQUAL MEASURES OF CONTAINMENT MAY BE APPROVED BY THE ENGINEER OR EROSION CONTACT PERSON IF ANOTHER PRODUCT OR METHOD OF CONTAINMENT IS DESIRED.

SECTION C - SWPPP - POST-CONSTRUCTION PHASE

C1 DESCRIPTION OF POLLUTANTS AND THEIR SOURCES ASSOCIATED WITH THE PROPOSED LAND USE - POTENTIAL POLLUTANTS FROM POST-CONSTRUCTION ACTIVITY SUCH AS SANDS AND SALTS FROM SNOW REMOVAL; OIL, GREASE, ANTIFREEZE, ETC. FROM VEHICLES INCLUDING HEAVY METAL FROM BRAKE PAD WEAR SHOULD BE PROPERLY ATTENDED TO TO REDUCE THE CONTAMINANTS FROM ENTERING THE STORM SYSTEM. TRASH SHOULD BE CLEANED UP TO REDUCE CLOGGING OF STORM SYSTEMS AND REDUCE POTENTIAL BACTERIA AND/OR OTHER BIOLOGICAL AGENTS FROM ENTERING IN THE STORM SYSTEM. EXCESS FERTILIZERS AND HERBICIDES SHOULD BE AVOIDED. CLEAN UP IMMEDIATELY IF ANY IS SPILLED.
C2 SEQUENCE DESCRIBING STORMWATER QUALITY MEASURE IMPLEMENTATION - WATER QUALITY PROVIDED BY THE FIRST DEFENSE WATER QUALITY UNIT. ADDITIONAL WATER QUALITY MEASURES WILL BE IMPLEMENTED BY THE SITE OWNER AS PART OF THEIR SPILL PREVENTION, CONTROL, AND COUNTERMEASURE PLAN.
C3 DESCRIPTION OF PROPOSED POST-CONSTRUCTION STORMWATER QUALITY MEASURES - WATER QUALITY PROVIDED BY THE FIRST DEFENSE WATER QUALITY UNIT. ADDITIONAL WATER QUALITY MEASURES WILL BE IMPLEMENTED BY THE SITE OWNER AS PART OF THEIR SPILL PREVENTION, CONTROL, AND COUNTERMEASURE PLAN.
C4 LOCATION, DIMENSIONS, SPECIFICATIONS, AND CONSTRUCTION DETAILS OF EACH STORM WATER QUALITY MEASURE - WATER QUALITY PROVIDED BY THE FIRST DEFENSE WATER QUALITY UNIT. ADDITIONAL WATER QUALITY MEASURES WILL BE IMPLEMENTED BY THE SITE OWNER AS PART OF THEIR SPILL PREVENTION, CONTROL, AND COUNTERMEASURE PLAN.
C5 DESCRIPTION OF MAINTENANCE GUIDELINES FOR POST CONSTRUCTION STORMWATER QUALITY MEASURES - THESE ARE LOCATED ON THE VARIOUS DETAILS AND WITHIN THE SWPPP CONSTRUCTION DRAWINGS, AND CITY OF WESTFIELD STANDARD DETAILS.

SECTION 1 EMERGENCY RESPONSE NUMBERS

EMERGENCY FOR ANY LIFE THREATENING PROBLEM	911
WESTFIELD FIRE DEPARTMENT	317.896.2704
WESTFIELD POLICE DEPARTMENT	317.776.6336
INDIANA DEPT. OF NATURAL RESOURCES	317.232.4200
INDIANA DEPT. OF ENVIRONMENTAL MANAGEMENT	317.233.7745
HAMILTON COUNTY COUNTY SOIL AND WATER	317.773.2181
CITY OF WESTFIELD PUBLIC WORKS	317.804.3100

SECTION 2 MATERIAL HANDLING AND SPILL PREVENTION PLAN

IN ORDER TO MINIMIZE THE RELEASE OF POTENTIAL POLLUTANTS DURING CONSTRUCTION THE CONTRACTORS SHALL IMPLEMENT THIS MATERIAL HANDLING AND SPILL PREVENTION PLAN. THE CONTRACTOR SHALL REVIEW THIS PLAN WITH ALL SUBCONTRACTORS AND REQUIRE THAT THEY IMPLEMENT THE PLAN AS WELL.

1. CONSTRUCTION EQUIPMENT
A. FUELING, LUBRICATION AND FLUIDS: ALL OPERATIONS INVOLVING THE ADDITION OF FLUIDS TO EQUIPMENT SHOULD BE DONE IN ONE LOCATION, AS DESIGNATED BY THE CONSTRUCTION MANAGER, SO THAT SPILLS ARE LIMITED TO ONE LOCATION ON THE SITE, WHICH WILL FACILITATE THE CLEANUP OF SPILLS. IF AN ONSITE-FUELING TANK IS PLANNED TO BE ON SITE, IT SHALL BE DOUBLE WALLED AND STORED IN THIS DESIGNED AREA. THIS LOCATION IS AN AREA THAT WILL NOT ALLOW SPILLED FLUIDS TO MIGRATE INTO SUBSURFACE SOILS. IN THE EVENT OF A SPILL, THE FLUID SHALL IMMEDIATELY BE CLEANED UP BY REMOVING THE CONTAMINATED SOIL OR STONE, WHICH SHALL BE DISPOSED OF IN AN ACCEPTABLE MANNER. SPILLS ON HARD SURFACES SHALL BE SOAKED UP BY AN ACCEPTABLE MATERIAL SUCH AS OIL DRY AND THE ABSORBENT MATERIAL DISPOSED OF IN A PROPER MANNER. THE SPILL SHALL ALSO BE REPORTED IMMEDIATELY TO THE CONSTRUCTION MANAGER'S SUPERINTENDENT.
B. EQUIPMENT REPAIR, ESPECIALLY WHEN FLUIDS MUST BE REMOVED FROM THE EQUIPMENT OR THE POSSIBILITY OF FLUID SPILLS IS HIGH, SHOULD ALWAYS BE DONE OFFSITE AT A FACILITY THAT IS MORE SUITABLE THAN A CONSTRUCTION SITE TO HANDLE SPILLS. WHEN EQUIPMENT MUST BE REPAIRED ONSITE IT SHOULD BE MOVED TO THE MAINTENANCE AND FUELING AREA IF POSSIBLE. OTHERWISE, SUITABLE ON SITE CONTAINERS SHOULD BE PLACED UNDER THE EQUIPMENT DURING REPAIR TO CATCH ANY SPILLED FLUIDS AND THESE FLUIDS SHOULD BE DISPOSED OF IN A PROPER MANNER.
C. ALL REUSABLE FLUID CONTAINERS, SUCH AS GASOLINE CANS, SHALL BE INSPECTED FOR LEAKS EACH TIME THEY ARE USED. IF LEAKS ARE FOUND, THE FLUID SHALL BE REMOVED FROM THE CONTAINER IN A PROPER MANNER AND THE CONTAINER DISPOSED OF IN AN ACCEPTABLE MANNER. EMPTY DISPOSABLE CONTAINER, SUCH AS GREASE TUBES AND LUBRICATING OIL AND BRAKE FLUID CONTAINERS, AND THEIR PACKAGING, SHALL BE DISPOSED OF IN A PROPER MANNER AND SHALL NOT BE LEFT ON THE GROUND OR IN THE OPEN ON THE CONSTRUCTION SITE.
2. CONSTRUCTION MATERIALS AND THEIR PACKAGING
A. EROSION CONTROL MEASURE SHOWN ON THE SUBJECT PROJECT SHALL BE IMPLEMENTED PRIOR TO AND DURING CONSTRUCTION IN THE PROPER SEQUENCING TO MINIMIZE SOIL EROSION. EROSION CONTROLS SHALL BE INSPECTED AND MAINTAINED AS DESCRIBED ELSEWHERE ON THE PLANS. EXCESSIVE DUSTING OF SOIL ON THE SITE SHALL BE MINIMIZED BY REDUCING CONSTRUCTION TRAFFIC ACROSS BARE SOIL DURING DRY AND/OR WINDY WEATHER, AND BY APPLYING WATER OR OTHER ACCEPTABLE DUST CONTROL MEASURES TO THE SOIL. UPON COMPLETION OF CONSTRUCTION AND SUITABLE ESTABLISHMENT OF PERMANENT VEGETATION, TEMPORARY EROSION CONTROL MEASURES SUCH AS SILT FENCE, CHECK DAMS AND INLET PROTECTION DEVICES SHALL BE REMOVED IN A MANNER TO MINIMIZE ADDITIONAL LAND DISTURBANCE. ANY AREAS DISTURBED BY THESE OPERATIONS SHALL BE PROPERLY REVEGATATED.
B. LARGE WASTE MATERIALS CREATED BY CUTTING, SAWING, DRILLING, OR OTHER OPERATIONS SHALL BE PROPERLY DISPOSED OF IN SUITABLE WASTE CONTAINERS. THE SITE SHALL BE CHECKED AT THE END OF THE DAY, AS A MINIMUM, AND ALL WASTE MATERIALS, INCLUDING THOSE BLOWN ACROSS OR OFF THE SITE BY WIND SHALL BE PICKED UP AND DISPOSED OF IN SUITABLE CONTAINERS. WHERE POSSIBLE, OPERATIONS SUCH AS SAWING THAT CREATE SMALL PARTICLES SHOULD BE PERFORMED IN ONE SPOT IN AN AREA PROTECTED FROM WIND, AND WASTE PARTICLES COLLECTED AND DISPOSED OF FREQUENTLY TO MINIMIZE WIND DISPERSAL. PACKAGING USED TO TRANSPORT MATERIALS TO THE SITE FOR CONSTRUCTION OF THE FACILITY SHALL BE DISPOSED OF PROPERLY, WHETHER THE MATERIAL IS TAKEN OUT OF ITS PACKAGE AND INCORPORATED INTO THE PROJECT IMMEDIATELY OR STORED ONSITE FOR FUTURE USE. PACKAGED MATERIALS STORED ONSITE SHALL BE INSPECTED REGULARLY AND ANY LOOSE PACKAGING SHALL BE REPAIRED OR DISPOSED OF PROPERLY.
C. ALL DEWATERING OF ACTIVITIES SHALL BE DONE IN ACCORDANCE TO GOOD EROSION CONTROL PRACTICES. THESE PRACTICES SHOULD INCLUDE THE USE OF DIRT BAGS SUCH AS SILT FENCE INLET PROTECTION. THE USE OF THESE TYPES OF DEWATERING DEVICES WILL REMOVE LARGE QUANTITIES OF SILT, SEDIMENT, AND DIRT AND PREVENT THESE MATERIALS TO ENTER THE STORM SEWER SYSTEM.
D. IF THE USE OF LIME IS USED TO STABILIZE THE SOIL OF THE SITE THEN ALL CONSTRUCTION EQUIPMENT USED SHALL BE CLEANED OF ALL EXCESS MATERIAL WITH WATER IN THE MAINTENANCE AND REFUELING AREA AS SHOWN WITHIN THESE PLANS.
E. NUTRIENTS AND FERTILIZERS SHALL ONLY BE USED TO ESTABLISH RAPID VEGETATION. WHEN THESE PRODUCTS ARE UTILIZED, THE USER SHOULD PAY STRICT ATTENTION TO THE PRODUCTS RECOMMENDED USAGE.
3. CONCRETE WASTE WATER
A. ALL CONCRETE WASTEWATER SHALL BE DISPOSED OF IN THE DESIGNED AREA AS DIRECTED BY THE CONSTRUCTION MANAGER. THIS AREA IS TO BE A 3' DEEP, 10' SQUARE PIT AS DETAILED ON THE EROSION CONTROL PLAN. THIS AREA SHALL BE INSPECTED ON A DAILY BASIS AT A MINIMUM. WHEN THIS AREA BECOMES FULL, THE POLLUTANTS SHALL BE EXCAVATED, PLACED IN AN ACCEPTABLE CONTAINER AND DISPOSED OF IN PROPER MANNER, BY THE EXCAVATION CONTRACTOR.
4. PAINT PRODUCTS
A. ALL EXCESS PAINT AND THEIR RELATED PRODUCTS SHALL BE DISPOSED OF IN THE MANNER AT WHICH THE MANUFACTURER SUGGESTS. UNDER NO CIRCUMSTANCES WILL PAINT OR THEIR RELATED PRODUCTS BE CLEANED OR DISPOSED OF IN SOIL, SANITARY SEWERS, STORM SEWERS OR DETENTION BASINS. ANY VIOLATION OF THIS SHALL BE REPORTED TO THE JOB SUPERINTENDENT.
IN THE EVENT OF ACCIDENTALLY CONTAMINATION ALL EFFORTS SHOULD BE MADE TO REMOVE CONTAMINANTS IN AN APPROPRIATE MANNER. THE WESTFIELD FIRE DEPARTMENT SHOULD BE CONTACTED IMMEDIATELY TO DETERMINE IF FURTHER MEASURES ARE NEEDED.

RULE 6. SPILLS OF OIL AND OTHER OBJECTIONABLE SUBSTANCES; REPORTING, CONTAINMENT AND CLEANUP

(REPEALED BY WATER POLLUTION CONTROL BOARD; FILED FEB 25, 1997, 1:00 P.M.: 20 IR 1734)

RULE 6.1. SPILLS; REPORTING, CONTAINMENT, AND RESPONSE

327 IAC 2-6.1-1 APPLICABILITY

AUTHORITY: IC 13-14-8-7
AFFECTED: IC 13-11-2; IC 13-18-1; IC 13-18-3; IC 13-18-8; IC 13-18-17
SEC. 1. THIS RULE APPLIES TO THE REPORTING AND CONTAINMENT OF, AND THE RESPONSE TO THOSE SPILLS OF HAZARDOUS SUBSTANCES, EXTREMELY HAZARDOUS SUBSTANCES, PETROLEUM, AND OBJECTIONABLE SUBSTANCES THAT ARE OF A QUANTITY, TYPE, DURATION AND IN A LOCATION AS TO DAMAGE THE WATERS OF THE STATE. NOTHING IN THIS RULE IS INTENDED TO AFFECT REPORTING OR CLEAN-UP REQUIREMENTS SET FORTH BY OTHER FEDERAL, STATE, OR LOCAL LAWS. (WATER POLLUTION CONTROL BOARD; 327 IAC 2-6.1-1; FILED FEB 25, 1997, 1:00 P.M.: 20 IR 1731; READOPTED FILED JAN 10, 2001, 3:23 P.M.: 24 IR 1518; READOPTED FILED NOV 21, 2007, 1:16 P.M.: 20071219-IR-327070553BFA)

327 IAC 2-6.1-2 SPECIAL AREAS

AUTHORITY: IC 13-14-8-7
AFFECTED: IC 13-11-2; IC 13-18-1; IC 13-18-3; IC 13-18-8; IC 13-18-17
SEC. 2. CERTAIN AREAS OF THE STATE ARE RECOGNIZED AS HAVING UNIQUE GEOLOGY. A LARGE SECTION OF THE MID-SOUTHERN PART OF THE STATE IS A KARST REGION. PORTIONS OF SAINT JOSEPH, ELKHART, KOSCIUSKO, AND LAGRANGE COUNTIES CONTAIN A SOLE SOURCE AQUIFER AS REFERENCED IN 42 U.S.C. 300H-3(E). THE WATERS OF THE STATE ARE PARTICULARLY VULNERABLE TO DAMAGE FROM SPILLS IN THESE AREAS, AND CARE SHOULD BE EXERCISED WHEN EVALUATING DAMAGE FROM SPILLS. INFORMATION ABOUT THESE AREAS CAN BE OBTAINED BY CALLING THE DEPARTMENT OF ENVIRONMENTAL MANAGEMENT, OFFICE OF LAND QUALITY, EMERGENCY RESPONSE SECTION: AREA CODE 1-888-233-7745 FOR IN-STATE CALLS (TOLL FREE), (317) 233-7745 FOR OUT-OF-STATE CALLS. (WATER POLLUTION CONTROL BOARD; 327 IAC 2-6.1-2; FILED FEB 25, 1997, 1:00 P.M.: 20 IR 1731; READOPTED FILED JAN 10, 2001, 3:23 P.M.: 24 IR 1518; READOPTED FILED NOV 21, 2007, 1:16 P.M.: 20071219-IR-327070553BFA; ERRATA FILED MAY 27, 2008, 2:06 P.M.: 20080625-IR-327080419ACA)

327 IAC 2-6.1-3 EXCLUSIONS

AUTHORITY: IC 13-14-8-7
AFFECTED: IC 13-11-2; IC 13-18-1; IC 13-18-3; IC 13-18-8; IC 13-18-17
SEC. 3. NOTWITHSTANDING ANY OTHER SECTION OF THIS RULE, THE REPORTING REQUIREMENT OF THIS RULE DOES NOT APPLY TO THE FOLLOWING OCCURRENCES:
(1) DISCHARGES OR EXCEEDANCES THAT ARE UNDER THE JURISDICTION OF AN APPLICABLE PERMIT WHEN THE SUBSTANCE IN QUESTION IS COVERED BY THE PERMIT AND DEATH OR ACUTE INJURY OR ILLNESS TO ANIMALS OR HUMANS DOES NOT OCCUR.
(2) LAWFUL APPLICATION OF MATERIALS, INCLUDING, BUT NOT LIMITED TO:
(A) COMMERCIAL OR NATURAL FERTILIZERS AND PESTICIDES ON OR TO LAND OR WATER; OR
(B) DUST SUPPRESSION MATERIALS.
(3) THE APPLICATION OF PETROLEUM NECESSARY FOR CONSTRUCTION THAT DOES NOT DAMAGE WATERS OF THE STATE.
(4) SPILLS OF LESS THAN ONE (1) POUND OR ONE (1) PINT.
(5) SPILLS OF INTEGRAL OPERATING FLUIDS, IN THE USE OF MOTOR VEHICLES OR OTHER EQUIPMENT, THE TOTAL VOLUME OF WHICH IS LESS THAN OR EQUAL TO FIFTY-FIVE (55) GALLONS AND WHICH DO NOT DAMAGE WATERS OF THE STATE.
(6) OIL SHEENS PRODUCED AS A RESULT OF THE NORMAL OPERATION OF PROPERLY FUNCTIONING WATERCRAFT.
(7) A RELEASE OF A SUBSTANCE INTEGRAL TO A SPILL RESPONSE ACTIVITY THAT HAS BEEN APPROVED AND AUTHORIZED BY A STATE OR FEDERAL ONSCENE COORDINATOR. (WATER POLLUTION CONTROL BOARD; 327 IAC 2-6.1-3; FILED FEB 25, 1997, 1:00 P.M.: 20 IR 1731; ERRATA FILED MAR 7, 1997, 2:25 P.M.: 20 IR 1738; READOPTED FILED JAN 10, 2001, 3:23 P.M.: 24 IR 1518; READOPTED FILED NOV 21, 2007, 1:16 P.M.: 20071219-IR-327070553BFA)

327 IAC 2-6.1-4 DEFINITIONS

AUTHORITY: IC 13-14-8-7
AFFECTED: IC 13-11-2; IC 13-18-1; IC 13-18-3; IC 13-18-8; IC 13-18-17; IC 14-8-2-7; IC 14-25-7-13; IC 14-25-7-15
SEC. 4. IN ADDITION TO THE DEFINITIONS CONTAINED IN IC 13-11-2-17(D), IC 13-11-2-35(A), IC 13-11-2-51, IC 13-11-2-158(A), IC 13-11-2-160, IC 13-11-2-260, IC 13-11-2-265, AND IN 327 IAC 1, THE FOLLOWING DEFINITIONS APPLY THROUGHOUT THIS RULE:
(1) "ANIMAL" MEANS ALL MAMMALS, BIRDS, REPTILES, AMPHIBIANS, FISH, CRUSTACEANS, AND MOLLUSKS.
(2) "AQUATIC LIFE" MEANS THOSE PLANTS AND MACROINVERTEBRATES THAT ARE DEPENDENT UPON AN AQUATIC ENVIRONMENT.
(3) "CONTAIN" MEANS TO TAKE SUCH IMMEDIATE ACTION AS NECESSARY TO DAM, BLOCK, RESTRAIN, OR OTHERWISE ACT TO MOST EFFECTIVELY PREVENT A SPILL FROM ENTERING WATERS OF THE STATE OR MINIMIZE DAMAGE TO THE WATERS OF THE STATE FROM A SPILL.
(4) "DAMAGE" MEANS THE ACTUAL OR IMMINENT ALTERATION OF THE WATERS OF THE STATE SO AS TO RENDER THE WATERS HARMFUL, DETRIMENTAL, OR INJURIOUS TO:
(A) PUBLIC HEALTH, SAFETY, OR WELFARE;
(B) DOMESTIC, COMMERCIAL, INDUSTRIAL, AGRICULTURAL, OR RECREATIONAL USES; OR
(C) ANIMALS OR AQUATIC LIFE.
(5) "DOWNSTREAM WATER USER" MEANS:
(A) A COMMUNITY PUBLIC WATER SUPPLY, AS IDENTIFIED BY THE DEPARTMENT OF NATURAL RESOURCES UNDER IC 14-25-7-13(D);
(B) A SIGNIFICANT WATER WITHDRAWAL FACILITY AS REGISTERED WITH THE DEPARTMENT OF NATURAL RESOURCES UNDER IC 14-25-7-15;
(C) USERS OF RECREATIONAL WATERS; OR
(D) ANY OTHER USER MADE KNOWN TO THE PERSON WHO HAS A SPILL.
(6) "EXTREMELY HAZARDOUS SUBSTANCE" MEANS A SUBSTANCE IDENTIFIED PURSUANT TO 42 U.S.C. 11002 AND 11004. (40 CFR 355 APPENDIX A.)
(7) "FACILITY" MEANS ALL LAND, BUILDINGS, EQUIPMENT, STRUCTURES, AND OTHER STATIONARY ITEMS THAT ARE LOCATED ON A SINGLE SITE OR ON CONTIGUOUS SITES AND THAT ARE OWNED OR OPERATED BY THE SAME PERSON OR BY ANY PERSON WHO CONTROLS, IS CONTROLLED BY, OR IS UNDER COMMON CONTROL WITH, SUCH PERSON.
(8) "FACILITY BOUNDARY" MEANS THE BOUNDARY OF A FACILITY OR AN EASEMENT OR RIGHT-OF-WAY.
(9) "HAZARDOUS SUBSTANCE" HAS THE MEANING SET FORTH IN 42 U.S.C. 9601(14).
(10) "MODE OF TRANSPORTATION" INCLUDES, BUT IS NOT LIMITED TO, CARRIAGE BY:
(A) RAIL AND MOTOR VEHICLES;
(B) AIRCRAFT;
(C) WATERCRAFT;
(D) PIPELINES; OR
(E) OTHER MEANS OF TRANSPORTATION;
IN COMMERCE. THIS DEFINITION EXCLUDES CARRIAGE WITHIN A FACILITY BY TRANSPORTATION EQUIPMENT OWNED, OPERATED, OR CONTROLLED BY THAT FACILITY.
(11) "OBJECTIONABLE SUBSTANCES" MEANS SUBSTANCES THAT ARE:
(A) OF A QUANTITY AND A TYPE; AND
(B) PRESENT FOR A DURATION AND IN A LOCATION;
SO AS TO DAMAGE WATERS OF THE STATE. THIS DEFINITION EXCLUDES HAZARDOUS SUBSTANCES, EXTREMELY HAZARDOUS SUBSTANCES, PETROLEUM, AND MIXTURES THEREOF.
(12) "ON-SCENE COORDINATOR" MEANS A STATE OR FEDERAL OFFICIAL DESIGNATED BY THE DEPARTMENT, THE UNITED STATES ENVIRONMENTAL PROTECTION AGENCY, OR THE UNITED STATES COAST GUARD TO DIRECT AND COORDINATE SPECIAL SPILL RESPONSE ACTIVITIES.
(13) "RECREATIONAL WATERS" MEANS ANY WATER USED FOR:
(A) BOATING, SWIMMING, FISHING, HUNTING, TRAPPING, OR WILDLIFE VIEWING; OR
(B) PUBLIC ACCESS AREAS THAT ARE OWNED BY THE DEPARTMENT OF NATURAL RESOURCES OR THE FEDERAL GOVERNMENT; AS LISTED BY THE DEPARTMENT.
(14) "REPORTABLE QUANTITY" MEANS THE AMOUNT OF A HAZARDOUS SUBSTANCE OR EXTREMELY HAZARDOUS SUBSTANCE THAT IS REQUIRED TO BE REPORTED UNDER FEDERAL LAW UNDER 42 U.S.C. 9602(A) AND (B) AND 42 U.S.C. 9603(A). (40 CFR 302.4 OR 40 CFR 355 APPENDIX A.)
(15) "SPILL" MEANS ANY UNEXPECTED, UNINTENDED, ABNORMAL, OR UNAPPROVED DUMPING, LEAKAGE, DRAINAGE, SEEPAGE, DISCHARGE OR OTHER LOSS OF PETROLEUM, HAZARDOUS SUBSTANCES, EXTREMELY HAZARDOUS SUBSTANCES, OR OBJECTIONABLE SUBSTANCES. THE TERM DOES NOT INCLUDE RELEASES TO IMPERMEABLE SURFACES WHEN THE SUBSTANCE DOES NOT MIGRATE OFF THE SURFACE OR PENETRATE THE SURFACE AND ENTER THE SOIL.
(16) "SPILL RESPONSE", FOR PURPOSES OF THIS RULE, MEANS THE FOLLOWING:
(A) THE SPILL IS CONTAINED; AND
(B) FREE MATERIAL IS REMOVED OR NEUTRALIZED.
(17) "SPILL REPORT" MEANS AN ORAL REPORT THAT INCLUDES THE FOLLOWING INFORMATION ABOUT A SPILL, TO THE EXTENT THAT THE INFORMATION IS KNOWN AT THE TIME OF THE REPORT:
(A) THE NAME, ADDRESS, AND TELEPHONE NUMBER OF THE PERSON MAKING THE SPILL REPORT.
(B) THE NAME, ADDRESS, AND TELEPHONE NUMBER OF A CONTACT PERSON IF DIFFERENT FROM CLAUSE (A).
(C) THE LOCATION OF THE SPILL.
(D) THE TIME OF THE SPILL.
(E) THE IDENTIFICATION OF THE SUBSTANCE SPILLED.
(F) THE APPROXIMATE QUANTITY OF THE SUBSTANCE THAT HAS BEEN OR MAY FURTHER BE SPILLED.
(G) THE DURATION OF THE SPILL.
(H) THE SOURCE OF THE SPILL.
(I) NAME AND LOCATION OF THE WATERS DAMAGED.
(J) THE IDENTITY OF ANY RESPONSE ORGANIZATION RESPONDING TO THE SPILL.
(K) WHAT MEASURES HAVE BEEN OR WILL BE UNDERTAKEN TO PERFORM A SPILL RESPONSE.
(L) ANY OTHER INFORMATION THAT MAY BE SIGNIFICANT TO THE RESPONSE ACTION.
(18) "WATERS", AS DEFINED IN IC 13-11-2-265, MEANS THE ACCUMULATIONS OF WATER, SURFACE AND UNDERGROUND, NATURAL AND ARTIFICIAL, PUBLIC AND PRIVATE, OR PARTS THEREOF, THAT ARE WHOLLY OR PARTIALLY WITHIN, FLOW THROUGH, OR BORDER UPON THIS STATE. THE TERM DOES NOT INCLUDE ANY PRIVATE POND OR ANY OFF-STREAM POND, RESERVOIR, OR FACILITY BUILT FOR REDUCTION OR CONTROL OF POLLUTION OR COOLING OF WATER PRIOR TO DISCHARGE UNLESS THE DISCHARGE FROM THE POND, RESERVOIR, OR FACILITY CAUSES OR THREATENS TO CAUSE WATER POLLUTION. (WATER POLLUTION CONTROL BOARD; 327 IAC 2-6.1-4; FILED FEB 25, 1997, 1:00 P.M.: 20 IR 1731; ERRATA FILED MAR 7, 1997, 2:25 P.M.: 20 IR 1738; READOPTED FILED JAN 10, 2001, 3:23 P.M.: 24 IR 1518; READOPTED FILED NOV 21, 2007, 1:16 P.M.: 20071219-IR-327070553BFA)

327 IAC 2-6.1-5 REPORTABLE SPILLS; FACILITY

AUTHORITY: IC 13-14-8-7
AFFECTED: IC 13-11-2; IC 13-18-1; IC 13-18-3; IC 13-18-8; IC 13-18-17
SEC. 5. THE FOLLOWING SPILLS FROM A FACILITY MUST BE REPORTED:
(1) SPILLS THAT DAMAGE THE WATERS OF THE STATE SO AS TO CAUSE DEATH OR ACUTE INJURY OR ILLNESS TO HUMANS OR ANIMALS.
(2) SPILLS FROM A FACILITY THAT HAS BEEN NOTIFIED IN WRITING BY A WATER UTILITY THAT IT IS LOCATED IN A DELINEATED PUBLIC WATER SUPPLY WELLHEAD PROTECTION AREA AS APPROVED BY THE DEPARTMENT UNDER 327 IAC 8-4.1 THAT ARE:
(A) SPILLS OF HAZARDOUS SUBSTANCES OR EXTREMELY HAZARDOUS SUBSTANCES WHEN THE AMOUNT SPILLED EXCEEDS ONE HUNDRED (100) POUNDS OR THE REPORTABLE QUANTITY, WHICHEVER IS LESS;
(B) SPILLS OF PETROLEUM WHEN THE AMOUNT SPILLED EXCEEDS FIFTY-FIVE (55) GALLONS; OR
(C) SPILLS OF OBJECTIONABLE SUBSTANCES AS DEFINED IN SECTION 4(11) OF THIS RULE.
(3) SPILLS THAT DAMAGE WATERS OF THE STATE AND THAT:
(A) ARE LOCATED WITHIN FIFTY (50) FEET OF A KNOWN PRIVATE DRINKING WATER WELL LOCATED BEYOND THE FACILITY PROPERTY BOUNDARY; OR
(B) ARE LOCATED WITHIN ONE HUNDRED (100) YARDS OF:
(I) ANY HIGH QUALITY WATER DESIGNATED AS AN OUTSTANDING STATE RESOURCE PURSUANT TO 327 IAC 2-1-2(3), EXCLUDING LAKE MICHIGAN;
(II) ANY WATER DESIGNATED AS EXCEPTIONAL USE PURSUANT TO 327 IAC 2-13(A)(6) [SIC., 327 IAC 2-1-3(A)(6)] AND 327 IAC 2-1-11(B);
(III) ANY WATER DESIGNATED AS CAPABLE OF SUPPORTING A SALMONID FISHERY PURSUANT TO 327 IAC 2-1-6(C)(1), EXCEPT LAKE MICHIGAN;
OR
(IV) ANY WATER THAT IS A FISH HATCHERY, FISH AND WILDLIFE AREA, NATURE PRESERVE, OR RECREATIONAL WATER OWNED BY THE DEPARTMENT OF NATURAL RESOURCES OR THE FEDERAL GOVERNMENT.
(4) FOR ANY SPILL WHICH DOES NOT MEET THE CRITERIA IN SUBDIVISIONS (1) THROUGH (3), THE FOLLOWING MUST BE REPORTED:
(A) SPILLS TO SURFACE WATERS:
(I) SPILLS OF HAZARDOUS SUBSTANCES OR EXTREMELY HAZARDOUS SUBSTANCES WHEN THE AMOUNT SPILLED EXCEEDS ONE HUNDRED (100) POUNDS OR THE REPORTABLE QUANTITY, WHICHEVER IS LESS;
(II) SPILLS OF PETROLEUM OF SUCH QUANTITY AS TO CAUSE A SHEEN UPON THE WATERS;
OR
(III) SPILLS OF OBJECTIONABLE SUBSTANCES AS DEFINED IN SECTION 4(11) OF THIS RULE.
(B) SPILLS TO SOIL BEYOND THE FACILITY BOUNDARY:
(I) SPILLS OF HAZARDOUS SUBSTANCES OR EXTREMELY HAZARDOUS SUBSTANCES WHEN THE AMOUNT SPILLED EXCEEDS ONE HUNDRED (100) POUNDS OR THE REPORTABLE QUANTITY, WHICHEVER IS LESS;
(II) SPILLS OF PETROLEUM WHEN THE AMOUNT SPILLED EXCEEDS FIFTY-FIVE (55) GALLONS;
OR
(III) SPILLS OF OBJECTIONABLE SUBSTANCES AS DEFINED IN SECTION 4(11) OF THIS RULE.
(C) SPILLS TO SOIL WITHIN THE FACILITY BOUNDARY:
(I) SPILLS OF HAZARDOUS SUBSTANCES OR EXTREMELY HAZARDOUS SUBSTANCES WHEN THE AMOUNT SPILLED EXCEEDS THE REPORTABLE QUANTITY;
(II) SPILLS OF PETROLEUM WHEN THE SPILLED AMOUNT EXCEEDS ONE THOUSAND (1,000) GALLONS;
OR
(III) SPILLS OF OBJECTIONABLE SUBSTANCES AS DEFINED IN SECTION 4(11) OF THIS RULE.
(5) ANY SPILL FOR WHICH A SPILL RESPONSE HAS NOT BEEN DONE.
(WATER POLLUTION CONTROL BOARD; 327 IAC 2-6.1-5; FILED FEB 25, 1997, 1:00 P.M.: 20 IR 1732; ERRATA FILED MAR 7, 1997, 2:25 P.M.: 20 IR 1738; READOPTED FILED JAN 10, 2001, 3:23 P.M.: 24 IR 1518; READOPTED FILED NOV 21, 2007, 1:16 P.M.: 20071219-IR-327070553BFA)

327 IAC 2-6.1-6 REPORTABLE SPILLS; TRANSPORTATION

AUTHORITY: IC 13-14-8-7
AFFECTED: IC 13-11-2; IC 13-18-1; IC 13-18-3; IC 13-18-8; IC 13-18-17
SEC. 6. THE FOLLOWING SPILLS FROM A MODE OF TRANSPORTATION MUST BE REPORTED:
(1) SPILLS THAT DAMAGE THE WATERS OF THE STATE SO AS TO CAUSE DEATH OR ACUTE INJURY OR ILLNESS TO HUMANS OR ANIMALS.
(2) SPILLS THAT DAMAGE SURFACE WATERS.
(3) SPILLS TO SOIL:
(A) SPILLS OF HAZARDOUS SUBSTANCES OR EXTREMELY HAZARDOUS SUBSTANCES WHEN THE AMOUNT SPILLED EXCEEDS ONE HUNDRED (100) POUNDS OR THE REPORTABLE QUANTITY, WHICHEVER IS LESS;
(B) SPILLS OF PETROLEUM WHEN THE AMOUNT SPILLED EXCEEDS FIFTY-FIVE (55) GALLONS;
OR
(C) SPILLS OF OBJECTIONABLE SUBSTANCES AS DEFINED IN SECTION 4(11) OF THIS RULE.
(4) ANY SPILL FOR WHICH A SPILL RESPONSE HAS NOT BEEN DONE. (WATER POLLUTION CONTROL BOARD; 327 IAC 2-6.1-6; FILED FEB 25, 1997, 1:00 P.M.: 20 IR 1733; READOPTED FILED JAN 10, 2001, 3:23 P.M.: 24 IR 1518; READOPTED FILED NOV 21, 2007, 1:16 P.M.: 20071219-IR-327070553BFA)

327 IAC 2-6.1-7 REPORTABLE SPILLS; RESPONSIBILITIES

AUTHORITY: IC 13-14-8-7
AFFECTED: IC 13-11-2; IC 13-18-1; IC 13-18-3; IC 13-18-8; IC 13-18-17
SEC. 7. ANY PERSON WHO OPERATES, CONTROLS, OR MAINTAINS ANY MODE OF TRANSPORTATION OR FACILITY FROM WHICH A SPILL OCCURS SHALL, UPON DISCOVERY OF A REPORTABLE SPILL TO THE SOIL OR SURFACE WATERS OF THE STATE, DO THE FOLLOWING:
(1) CONTAIN THE SPILL, IF POSSIBLE, TO PREVENT ADDITIONAL SPILLED MATERIAL FROM ENTERING THE WATERS OF THE STATE.
(2) UNDERTAKE OR CAUSE OTHERS TO UNDERTAKE ACTIVITIES NEEDED TO ACCOMPLISH A SPILL RESPONSE.
(3) AS SOON AS POSSIBLE, BUT WITHIN TWO (2) HOURS OF DISCOVERY, COMMUNICATE A SPILL REPORT TO THE DEPARTMENT OF ENVIRONMENTAL MANAGEMENT, OFFICE OF LAND QUALITY, EMERGENCY RESPONSE SECTION: AREA CODE 1-888-233-7745 FOR IN-STATE CALLS (TOLL FREE), (317) 233-7745 FOR OUT-OF-STATE CALLS. IF NEW OR UPDATED SPILL REPORT INFORMATION BECOMES KNOWN THAT INDICATES A SIGNIFICANT INCREASE IN THE LIKELIHOOD OF DAMAGE TO THE WATERS OF THE STATE, THE RESPONSIBLE PARTY SHALL NOTIFY THE DEPARTMENT AS SOON AS POSSIBLE BUT WITHIN TWO (2) HOURS OF THE TIME THE NEW OR UPDATED INFORMATION BECOMES KNOWN.
(4) SUBMIT TO THE INDIANA DEPARTMENT OF ENVIRONMENTAL MANAGEMENT, OFFICE OF LAND QUALITY, EMERGENCY RESPONSE SECTION (MC 66-30), 2525 N. SHADELAND AVE., SUITE 100, INDIANAPOLIS, IN 46219-1787, A WRITTEN COPY OF THE SPILL REPORT IF REQUESTED IN WRITING BY THE DEPARTMENT.
(5) EXCEPT FROM MODES OF TRANSPORTATION OTHER THAN PIPELINES, EXERCISE DUE DILIGENCE AND DOCUMENT ATTEMPTS TO NOTIFY THE FOLLOWING:
(A) FOR SPILLS TO SURFACE WATER THAT CAUSE DAMAGE, THE NEAREST AFFECTED DOWNSTREAM WATER USER LOCATED WITHIN TEN (10) MILES OF THE SPILL AND IN THE STATE OF INDIANA;
AND
(B) FOR SPILLS TO SOIL OUTSIDE THE FACILITY BOUNDARY, THE AFFECTED PROPERTY OWNER OR OWNERS, OPERATOR OR OPERATORS, OR OCCUPANT OR OCCUPANTS. (WATER POLLUTION CONTROL BOARD; 327 IAC 2-6.1-7; FILED FEB 25, 1997, 1:00 P.M.: 20 IR 1733; READOPTED FILED JAN 10, 2001, 3:23 P.M.: 24 IR 1518; ERRATA FILED FEB 6, 2006, 11:15 A.M.: 29 IR 1936; ERRATA FILED OCT 20, 2006, 10:08 A.M.: 20061101-IR-327060497ACA; READOPTED FILED NOV 21, 2007, 1:16 P.M.: 20071219-IR-327070553BFA; ERRATA FILED MAY 27, 2008, 2:06 P.M.: 20080625-IR-327080419ACA)

327 IAC 2-6.1-8 EMERGENCY SPILL RESPONSE ACTIONS

AUTHORITY: IC 13-14-8-7
AFFECTED: IC 13-11-2; IC 13-18-1; IC 13-18-3; IC 13-18-8; IC 13-18-17
SEC. 8. NOTWITHSTANDING ANY OTHER SECTION OF THIS RULE, EMERGENCY SPILL RESPONSE ACTIONS TAKE PRECEDENCE OVER REPORTING REQUIREMENTS, AND WHEN EMERGENCY SPILL RESPONSE ACTIVITIES RENDER SPILL REPORTING INCONSISTENT WITH EFFECTIVE RESPONSE ACTIVITIES, COMMUNICATION OF THE SPILL REPORT TO THE INDIANA DEPARTMENT OF ENVIRONMENTAL MANAGEMENT MAY BE DELAYED. IN SITUATIONS WHERE THE SPILL REPORT IS DELAYED, THE BURDEN OF PROVING THE NEED FOR THE DELAY SHALL BE UPON THE RESPONSIBLE PERSON. (WATER POLLUTION CONTROL BOARD; 327 IAC 2-6.1-8; FILED FEB 25, 1997, 1:00 P.M.: 20 IR 1734; READOPTED FILED JAN 10, 2001, 3:23 P.M.: 24 IR 1518; READOPTED FILED NOV 21, 2007, 1:16 P.M.: 20071219-IR-327070553BFA)

327 IAC 2-6.1-9 COMPLIANCE CONFIRMATION

AUTHORITY: IC 13-14-8-7
AFFECTED: IC 13-11-2; IC 13-18-1; IC 13-18-3; IC 13-18-8; IC 13-18-17
SEC. 9. WHEN SPILL REPORTING AND RESPONSE, AS PROVIDED FOR IN THIS RULE, HAS OCCURRED, THE DEPARTMENT SHALL, UPON REQUEST, ISSUE A LETTER CONFIRMING COMPLIANCE WITH THIS RULE AND STATING THAT NO FURTHER ACTION IS REQUIRED UNDER THIS RULE. (WATER POLLUTION CONTROL BOARD; 327 IAC 2-6.1-9; FILED FEB 25, 1997, 1:00 P.M.: 20 IR 1734; READOPTED FILED JAN 10, 2001, 3:23 P.M.: 24 IR 1518; READOPTED FILED NOV 21, 2007, 1:16 P.M.: 20071219-IR-327070553BFA)

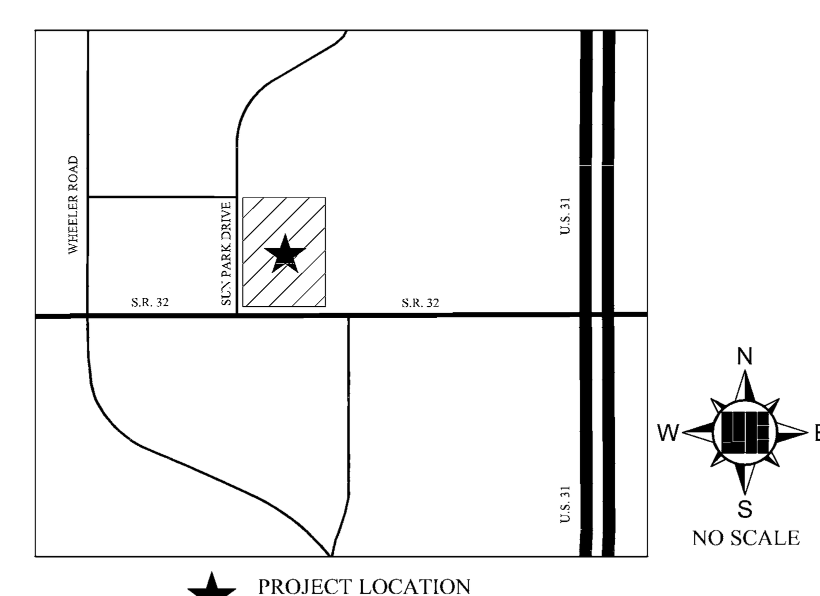

PROJECT LOCATION
AREA MAP

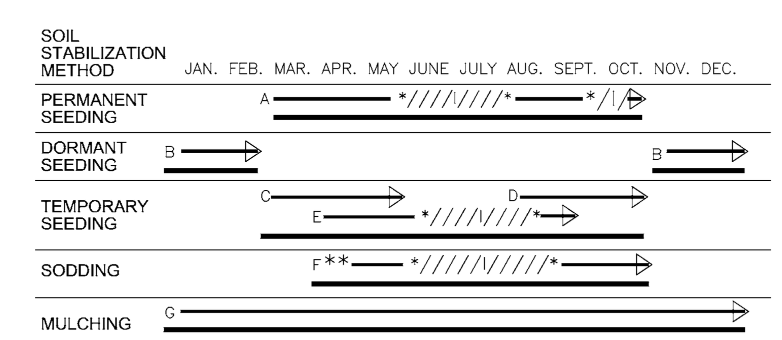

A = KENTUCKY BLUEGRASS* 40 LBS/ACRE; CREEPING RED FESCUE 40 LBS/ACRE; PLUS 2 TONS STRAW MULCH/ACRE, OR ADD ANNUAL RYEGRASS 20 LBS/ACRE.
B = KENTUCKY BLUEGRASS* 60 LBS/ACRE; CREEPING RED FESCUE 60 LBS/ACRE; PLUS 2 TONS STRAW MULCH/ACRE, OR ADD ANNUAL RYEGRASS 30 LBS/ACRE.
C = SPRING OATS 3 BUSHEL/ACRE.
D = WHEAT OR RYE 2 BUSHEL/ACRE.
E = ANNUAL RYEGRASS 40 LBS/ACRE.
F = SOD (BLEND 3 IMPROVED VARIETIES).
G = STRAW MULCH 2 TONS/ACRE.
/I/ IRRIGATION NEEDED DURING JUNE, JULY, AND/OR SEPTEMBER.
** IRRIGATION NEEDED FOR 2 TO 3 WEEKS AFTER APPLYING SOD.
*KENTUCKY BLUEGRASS BLEND OF 3 IMPROVED VARIETIES.

SEASONAL SOIL PROTECTION CHART

811
Know what's **below.** **Call** before you dig.
Within Indiana Call
811 or 800-382-5544
24 Hours a Day, 7 Days a Week.
PER INDIANA STATE LAW IC 8-1-26. IT IS AGAINST THE LAW TO EXCAVATE WITHOUT NOTIFYING THE UNDERGROUND LOCATION SERVICE TWO (2) WORKING DAYS BEFORE COMMENCING WORK.

10505 N. College Avenue
Indianapolis, Indiana 46280
weihe.net
317 | 846 - 6611
800 | 452 - 6408
317 | 843 - 0546 *fax*
ALLAN H. WEIHE, P.E., L.S. - FOUNDER
WEIHE ENGINEERS
Land Surveying | Civil Engineering
Landscape Architecture

REVISIONS AND ISSUES	DATE	BY
SUBMITTED FOR COUNTY SURVEYOR REVIEW	10.16.2015	BJS
ISSUED FOR TAC REVIEW	01.29.2016	BJS

PROJECT NO.: W15.0316
DWG NAME: w150316-C103 swppp spec.dwg
DESIGNED BY: RLW
DRAWN BY: RLW
CHECKED BY: BJS
DATE: 01.29.2016

STEVEN SCOTT RUCKER
REGISTERED
PE11300279
STATE OF INDIANA
PROFESSIONAL ENGINEER
APPROVAL PENDING
NOT FOR CONSTRUCTION

STEVEN SCOTT RUCKER P.E. 11300279

PREPARED FOR:
Culver's of WESTFIELD
17651 SUN PARK DRIVE, WESTFIELD, IN 46074

SWPPP SPECIFICATIONS
Part of SW/4, Section 36, Township 19 North, Range 3 East, Washington Township, Hamilton County, Indiana

SHEET NO.
C102

PROJECT NO.
W15.0316

LOCATION: H:\2015\w150316\Engineering\design\conset\w150316-C103 swppp spec.dwg
LAYOUT: C102
DATE/TIME: January 28, 2016 - 2:41pm
PLOTTED BY: schoeffb

TABLE 1. TEMPORARY SEEDING SPECIFICATIONS

SEED SPECIES[1]	RATE PER ACRE	PLANTING DEPTH	OPTIMUM DATES [2]
WHEAT OR RYE	150 LBS.	1 TO 1½ INCHES	SEPT. 15 – OCT. 30
SPRING OATS	100 LBS.	1 INCH	MARCH 1 – APRIL 15
ANNUAL RYEGRASS	40 LBS.	¼ INCH	MARCH 1 – MAY 1 AUG. 1 – SEPT. 1
GERMAN MILLET	40 LBS.	1 TO 2 INCHES	MAY 1 – JUNE 1
SUDANGRASS	35 LBS.	1 TO 2 INCHES	MAY 1 – JULY 30
BUCKWHEAT	60 LBS.	1 TO 2 INCHES	APRIL 15 – JUNE 1
CORN (BROADCAST)	300 LBS.	1 TO 2 INCHES	MAY 11 – AUG. 10
SORGHUM	35 LBS.	1 TO 2 INCHES	MAY 1 – JULY 15

1. PERENNIAL SPECIES MAY BE USED AS A TEMPORARY COVER, ESPECIALLY IF THE AREA TO BE SEEDED WILL REMAIN IDLE FOR MORE THAN ONE YEAR.
2. SEEDING DONE OUTSIDE THE OPTIMUM SEEDING DATES INCREASES THE CHANCES OF SEEDING FAILURE. DATES MAY BE EXTENDED OR SHORTENED BASED ON THE LOCATION OF THE PROJECT SITE WITHIN THE STATE.

NOTES:
1. MULCH ALONE IS AN ACCEPTABLE TEMPORARY COVER AND MAY BE USED IN LIEU OF TEMPORARY SEEDING, PROVIDED THAT IT IS APPROPRIATELY ANCHORED.
2. A HIGH POTENTIAL FOR FERTILIZER, SEED, AND MULCH TO WASH EXISTS ON STEEP BANKS, CUTS, AND IN CHANNELS AND AREAS OF CONCENTRATED FLOW.

SEEDBED PREPARATION
1. TEST SOIL TO DETERMINE PH AND NUTRIENT LEVELS.
2. APPLY SOIL AMENDMENTS AS RECOMMENDED BY THE SOIL TEST. IF TESTING IS NOT DONE, APPLY 400 TO 600 POUNDS PER ACRE OF 12-12-12 ANALYSIS FERTILIZER, OR EQUIVALENT.
3. WORK THE SOIL AMENDMENTS INTO THE UPPER TWO TO FOUR INCHES OF THE SOIL WITH
4. A DISK OR RAKE OPERATED ACROSS THE SLOPE.

SEEDING
1. SELECT A SEED SPECIES OR AN APPROPRIATE SEED MIXTURE AND APPLICATION RATE FROM TABLE 1.
2. APPLY SEED UNIFORMLY WITH A DRILL OR CULTIPACKER SEEDER OR BY BROADCASTING. PLANT OR COVER SEED TO THE DEPTH SHOWN IN TABLE 1.

NOTES:
1. IF DRILLING OR BROADCASTING THE SEED, ENSURE GOOD SEED-TO-SOIL CONTACT BY FIRMING THE SEEDBED WITH A ROLLER OR CULTIPACKER AFTER COMPLETING SEEDING OPERATIONS.
2. DAILY SEEDING WHEN THE SOIL IS MOIST IS USUALLY MOST EFFECTIVE.
3. IF SEEDING IS DONE WITH A HYDROSEEDER, FERTILIZER AND MULCH CAN BE APPLIED WITH THE SEED IN A SLURRY MIXTURE.
4. APPLY MULCH AND ANCHOR IT IN PLACE.

MAINTENANCE
1. INSPECT WITHIN 24 HOURS OF EACH RAIN EVENT AND AT LEAST ONCE EVERY SEVEN CALENDAR DAYS.
2. CHECK FOR EROSION OR MOVEMENT OF MULCH AND REPAIR IMMEDIATELY.
3. MONITOR FOR EROSION DAMAGE AND ADEQUATE COVER (80 PERCENT DENSITY); RESEED, FERTILIZE, AND APPLY MULCH WHERE NECESSARY.
4. IF NITROGEN DEFICIENCY IS APPARENT, TOP-DRESS FALL SEEDED WHEAT OR RYE SEEDING WITH 50 POUNDS PER ACRE OF NITROGEN IN FEBRUARY OR MARCH.

REFERENCE IN CHAPTER 7 PAGES 31-33 IN THE INDIANA STORM WATER QUALITY MANUAL

TEMPORARY SEED (only as needed)

OPEN LOW-MAINTENANCE AREAS (REMAINING IDLE MORE THAN SIX MONTHS)

SEED MIXTURES	RATE PER ACRE PURE LIVE SEED	OPTIMUM SOIL PH
1. PERENNIAL RYEGRASS – WHITE CLOVER	70 LBS. 2 LBS.	5.6 TO 7.0
2. PERENNIAL RYEGRASS – TALL FESCUE	70 LBS. 50 LBS.	5.6 TO 7.0
3. TALL FESCUE – WHITE CLOVER	70 LBS. 2 LBS.	5.5 TO 7.5

STEEP BANKS AND CUTS, LOW-MAINTENANCE AREAS (NOT MOWED)

SEED MIXTURES	RATE PER ACRE PURE LIVE SEED	OPTIMUM SOIL PH
1. SMOOTH BROME GRASS – RED CLOVER	35 LBS. 20 LBS.	5.5 TO 7.0
2. TALL FESCUE – WHITE CLOVER	50 LBS. 2 LBS.	5.5 TO 7.5
3. TALL FESCUE – RED CLOVER	50 LBS. 20 LBS.	5.5 TO 7.5
4. ORCHARD GRASS – RED CLOVER – WHITE CLOVER	30 LBS. 20 LBS. 2 LBS.	5.6 TO 7.0
5. CROWNVETCH – TALL FESCUE	12 LBS. 30 LBS.	5.6 TO 7.0

LAWNS AND HIGH-MAINTENANCE AREAS

SEED MIXTURES	RATE PER ACRE PURE LIVE SEED	OPTIMUM SOIL PH
1. BLUEGRASS	140 LBS.	5.5 TO 7.0
2. PERENNIAL RYEGRASS (TURF TYPE)	60 LBS. 90 LBS.	5.6 TO 7.0
3. TALL FESCUE (TURF TYPE) – BLUEGRASS	170 LBS. 30 LBS.	5.6 TO 7.5

CHANNELS AND AREAS OF CONCENTRATED FLOW

SEED MIXTURES	RATE PER ACRE PURE LIVE SEED	OPTIMUM SOIL PH
1. PERENNIAL RYEGRASS – WHITE	150 LBS. 2 LBS.	5.5 TO 7.0
2. KENTUCKY BLUEGRASS – SMOOTH BROMEGRASS – SWITCHGRASS – TIMOTHY – PERENNIAL RYEGRASS – WHITE CLOVER	20 LBS. 10 LBS. 3 LBS. 4 LBS. 10 LBS. 2 LBS.	5.5 TO 7.5
3. TALL FESCUE – WHITE CLOVER	150 LBS. 2 LBS.	5.5 TO 7.5
4. TALL FESCUE – PERENNIAL RYEGRASS – KENTUCKY BLUEGRASS	150 LBS. 20 LBS. 20 LBS.	5.5 TO 7.5

NOTES:
1. AN OAT OR WHEAT COMPANION OR NURSE CROP MAY BE USED WITH ANY OF THE ABOVE PERMANENT SEEDING MIXTURES, AT THE FOLLOWING RATES:
2. SPRING OATS - ONE-FOURTH TO THREE-FOURTHS BUSHEL PER ACRE
3. WHEAT - NO MORE THAN ONE-HALF BUSHEL PER ACRE
4. A HIGH POTENTIAL FOR FERTILIZER, SEED, AND MULCH TO WASH EXISTS ON STEEP BANKS, CUTS, AND IN CHANNELS AND AREAS OF CONCENTRATED

INSTALLATION
1. GRADE THE SITE TO ACHIEVE POSITIVE DRAINAGE.
2. ADD TOPSOIL OR COMPOST MULCH TO ACHIEVE NEEDED DEPTH FOR ESTABLISHMENT OF VEGETATION. (COMPOST MATERIAL MAY BE ADDED TO IMPROVE SOIL MOISTURE HOLDING CAPACITY, SOIL FRIABILITY, AND NUTRIENT AVAILABILITY.)

SEEDBED PREPARATION
1. TEST SOIL TO DETERMINE PH AND NUTRIENT LEVELS.
2. APPLY SOIL AMENDMENTS AS RECOMMENDED BY THE SOIL TEST AND WORK INTO THE
3. UPPER TWO TO FOUR INCHES OF SOIL. IF TESTING IS NOT DONE, APPLY 400 TO 600
4. POUNDS PER ACRE OF 12-12-12 ANALYSIS FERTILIZER, OR EQUIVALENT.
5. TILL THE SOIL TO OBTAIN A UNIFORM SEEDBED. USE A DISK OR RAKE, OPERATED ACROSS
6. THE SLOPE, TO WORK THE SOIL AMENDMENTS INTO THE UPPER TWO TO FOUR INCHES OF
7. THE SOIL.

SEEDING
1. OPTIMUM SEEDING DATES ARE MARCH 1 TO MAY 10 AND AUGUST 10 TO SEPTEMBER 30.
2. PERMANENT SEEDING DONE BETWEEN MAY 10 AND AUGUST 10 MAY NEED TO BE IRRIGATED.
3. SEEDING OUTSIDE OR BEYOND OPTIMUM SEEDING DATES IS STILL POSSIBLE WITH THE
4. UNDERSTANDING THAT RESEEDING OR OVERSEEDING MAY BE REQUIRED IF ADEQUATE SURFACE
5. COVER IS NOT ACHIEVED. RESEEDING OR OVERSEEDING CAN BE EASILY ACCOMPLISHED IF
6. THE SOIL SURFACE REMAINS WELL PROTECTED WITH MULCH.
7. SELECT A SEEDING MIXTURE AND RATE FROM TABLE 1. SELECT SEED MIXTURE BASED ON
8. SITE CONDITIONS, SOIL PH, INTENDED LAND USE, AND EXPECTED LEVEL OF MAINTENANCE.
9. APPLY SEED UNIFORMLY WITH A DRILL OR CULTIPACKER SEEDER OR BY BROADCASTING. PLANT OR COVER THE SEED TO A DEPTH OF ONE-FOURTH TO ONE-HALF INCH. IF DRILLING OR BROADCASTING THE SEED, ENSURE GOOD SEED-TO-SOIL CONTACT BY FIRMING THE SEEDBED WITH A ROLLER OR CULTIPACKER AFTER COMPLETING SEEDING OPERATIONS. (IF SEEDING IS DONE WITH A HYDROSEEDER, FERTILIZER AND MULCH CAN BE APPLIED WITH THE SEED IN A SLURRY MIXTURE.)
10. MULCH ALL SEEDED AREAS AND USE APPROPRIATE METHODS TO ANCHOR THE MULCH IN PLACE. CONSIDER USING EROSION CONTROL BLANKETS ON SLOPING AREAS AND CONVEYANCE CHANNELS

MAINTENANCE
- INSPECT WITHIN 24 HOURS OF EACH RAIN EVENT AND AT LEAST ONCE EVERY SEVEN CALENDAR DAYS UNTIL THE VEGETATION IS SUCCESSFULLY ESTABLISHED.
- CHARACTERISTICS OF A SUCCESSFUL STAND INCLUDE VIGOROUS DARK GREEN OR BLUISHGREEN SEEDLINGS WITH A UNIFORM VEGETATIVE COVER DENSITY OF 90 PERCENT OR MORE.
- CHECK FOR EROSION OR MOVEMENT OF MULCH.
- REPAIR DAMAGED, BARE, GULLIED, OR SPARSELY VEGETATED AREAS AND THEN FERTILIZE, RESEED, AND APPLY AND ANCHOR MULCH.
- IF PLANT COVER IS SPARSE OR PATCHY, EVALUATE THE PLANT MATERIALS CHOSEN, SOIL FERTILITY, MOISTURE CONDITION, AND MULCH APPLICATION; REPAIR AFFECTED AREAS EITHER BY OVERSEEDING OR PREPARING A NEW SEEDBED AND RESEEDING. APPLY AND ANCHOR MULCH ON THE NEWLY SEEDED AREAS.
- IF VEGETATION FAILS TO GROW, CONSIDER SOIL TESTING TO DETERMINE SOIL PH OR NUTRIENT DEFICIENCY PROBLEMS. (CONTACT YOUR SOIL AND WATER CONSERVATION DISTRICT OR COOPERATIVE EXTENSION OFFICE FOR ASSISTANCE.)
- IF ADDITIONAL FERTILIZATION IS NEEDED TO GET A SATISFACTORY STAND, DO SO ACCORDING TO SOIL TEST RECOMMENDATIONS.
- ADD FERTILIZER THE FOLLOWING GROWING SEASON. FERTILIZE ACCORDING TO SOIL TEST RECOMMENDATIONS.
- FERTILIZE TURF AREAS ANNUALLY. APPLY FERTILIZER IN A SPLIT APPLICATION. FOR COOL-SEASON GRASSES, APPLY ONE-HALF OF THE FERTILIZER IN LATE SPRING AND ONE HALF IN EARLY FALL. FOR WARM-SEASON GRASSES, APPLY ONE-THIRD IN EARLY SPRING, ONE-THIRD IN LATE SPRING, AND THE REMAINING ONE-THIRD IN MIDDLE SUMMER.

TABLE 1. PERMANENT SEEDING RECOMMENDATIONS THIS TABLE PROVIDES SEVERAL SEED MIXTURE OPTIONS. ADDITIONAL SEED MIXTURES ARE AVAILABLE COMMERCIALLY. WHEN SELECTING A MIXTURE, CONSIDER INTENDED LAND USE AND SITE CONDITIONS, INCLUDING SOIL PROPERTIES (E.G., SOIL PH AND DRAINAGE), SLOPE ASPECT, AND THE TOLERANCE OF EACH SPECIES TO SHADE AND DROUGHT.

REFERENCE IN CHAPTER 7 PAGES 35-40 IN THE INDIANA STORM WATER QUALITY MANUAL

PERMANENT SEED

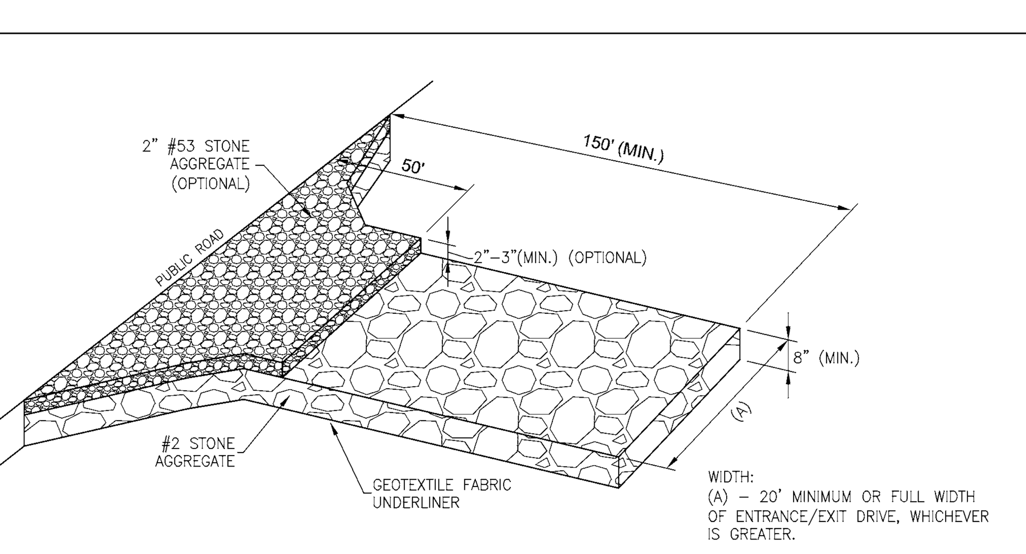

INSTALLATION:
1. REMOVE ALL VEGETATION AND OTHER OBJECTIONABLE MATERIAL FROM THE FOUNDATION AREA.
2. GRADE FOUNDATION AND CROWN FOR POSITIVE DRAINAGE. IF THE SLOPE OF THE CONSTRUCTION ENTRANCE IS TOWARD A PUBLIC ROAD AND EXCEEDS TWO PERCENT, CONSTRUCT AN EIGHT INCH HIGH DIVERSION RIDGE WITH A RATIO OF 3-TO-1 SIDE SLOPES ACROSS THE FOUNDATION AREA ABOUT 15 FEET FROM THE ENTRANCE TO DIVERT RUNOFF AWAY FROM THE ROAD.
3. INSTALL A CULVERT PIPE UNDER THE PAD IF NEEDED TO MAINTAIN PROPER PUBLIC ROAD DRAINAGE.
4. IF WET CONDITIONS ARE ANTICIPATED, PLACE GEOTEXTILE FABRIC ON THE GRADED FOUNDATION TO IMPROVE STABILITY.
5. PLACE AGGREGATE (INDOT CA NO. 2) TO THE DIMENSIONS AND GRADE SHOWN IN THE CONSTRUCTION PLANS, LEAVING THE SURFACE SMOOTH AND SLOPED FOR DRAINAGE.
6. TOP-DRESS THE FIRST 50 FEET ADJACENT TO THE PUBLIC ROADWAY WITH TWO TO THREE INCHES OF WASHED AGGREGATE (INDOT CA NO. 53) [OPTIONAL, USED PRIMARILY WHERE THE PURPOSE OF THE PAD IS TO KEEP SOIL FROM ADHERING TO VEHICLE TIRES].
7. WHERE POSSIBLE, DIVERT ALL STORM WATER RUNOFF AND DRAINAGE FROM THE INGRESS/EGRESS PAD TO A SEDIMENT TRAP OR BASIN.

MAINTENANCE:
- INSPECT DAILY.
- RESHAPE PAD AS NEEDED FOR DRAINAGE AND RUNOFF CONTROL.
- TOP DRESS WITH CLEAN AGGREGATE AS NEEDED.
- IMMEDIATELY REMOVE MUD AND SEDIMENT TRACKED OR WASHED ONTO PUBLIC ROADS.
- FLUSHING SHOULD ONLY BE USED IF THE WATER CAN BE CONVEYED INTO A SEDIMENT TRAP OR BASIN.

REFRENCED IN CHAPTER 7 PAGE 17-20 IN INIANA STORM WATER QUALITY MANUAL.

TEMPORARY CONSTRUCTION INGRESS/EGRESS PAD

LARGE SITES - TWO ACRES OR LARGER (NO SCALE)

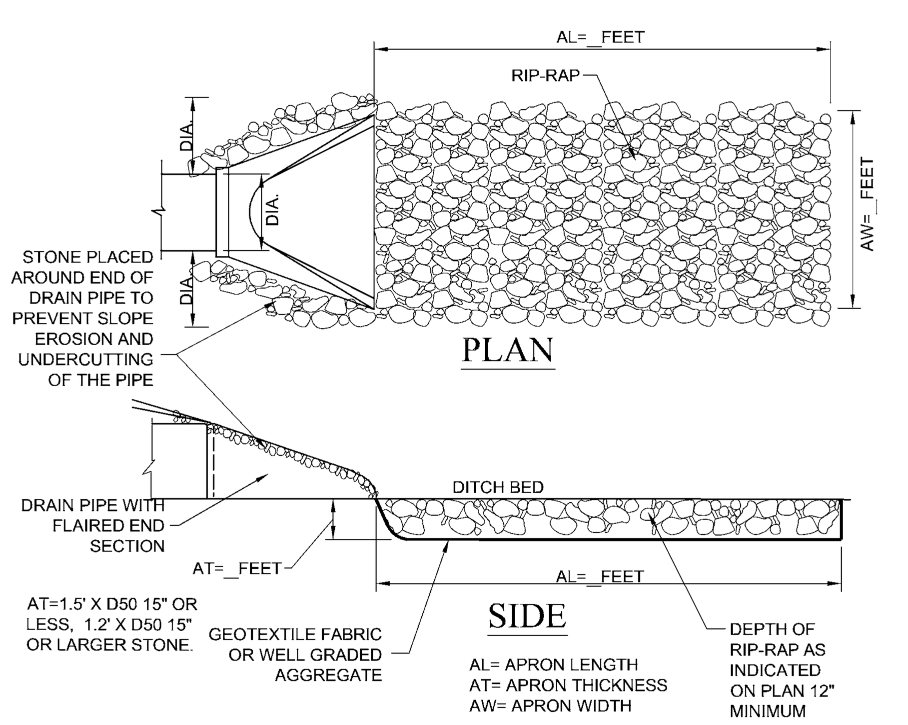

TABLE 1. SIZING FOR FLOW DISSIPATERS AT CULVERT PIPE OUTLETS

PIPE SIZE (D50)	AVERAGE RIPRAP DIAMETER	APRON WIDTH	APRON LENGTH
8 IN.	3 IN.	2 TO 3 FEET	5 TO 7 FEET
12 IN.	5 IN.	3 TO 4 FEET	6 TO 12 FEET
18 IN.	8 IN.	4 TO 6 FEET	8 TO 18 FEET
24 IN.	10 IN.	6 TO 8 FEET	12 TO 22 FEET
30 IN.	12 IN.	8 TO 10 FEET	14 TO 28 FEET
36 IN.	14 IN.	10 TO 12 FEET	16 TO 32 FEET

ENERGY DISSIPATER (OUTLET PROTECTION)
1. DIVERT SURFACE WATER RUNOFF AROUND THE STRUCTURE DURING CONSTRUCTION SO THAT THE SITE CAN BE PROPERLY DEWATERED FOR FOUNDATION PREPARATION.
2. EXCAVATE FOUNDATION AND APRON AREA SUBGRADES BELOW DESIGN ELEVATION TO ALLOW FOR THICKNESS OF THE FILTER MEDIUM AND RIPRAP.
3. COMPACT ANY FILL USED IN SUBGRADE PREPARATION TO THE DENSITY OF SURROUNDING UNDISTURBED SOIL MATERIAL.
4. SMOOTH SUBGRADE ENOUGH TO PROTECT GEOTEXTILE FABRIC FROM TEARING.
5. PLACE GEOTEXTILE FABRIC OR AGGREGATE BEDDING MATERIAL (FOR STABILIZATION AND FILTRATION) ON THE COMPACTED AND SMOOTHED FOUNDATION.
6. INSTALL RIPRAP TO THE LINES AND ELEVATIONS SHOWN IN THE CONSTRUCTION PLANS. BLEND RIPRAP SMOOTHLY TO SURROUNDING GRADE. IF THE CHANNEL IS WELL DEFINED, EXTEND THE APRON ACROSS THE CHANNEL BOTTOM AND UP THE CHANNEL BANKS TO AN ELEVATION OF SIX INCHES ABOVE THE MAXIMUM TAILWATER DEPTH OR TO THE TOP OF THE BANK, WHICHEVER IS LESS.
7. IF GEOTEXTILE FABRIC TEARS WHEN PLACING RIPRAP, REPAIR IMMEDIATELY BY LAYING AND STAPLING A PIECE OF FABRIC OVER DAMAGED AREA, OVERLAPPING THE UNDAMAGED AREAS BY AT LEAST 12 INCHES.
8. CONSTRUCT A SMALL PLUNGE POOL WITHIN THE OUTLET APRON. (RIPRAP APRONS MUST BE LEVEL WITH OR SLIGHTLY LOWER THAN THE RECEIVING CHANNEL AND SHOULD NOT PRODUCE AN OVERFALL OR RESTRICT FLOW OF THE WATER CONVEYANCE STRUCTURE.)

MAINTENANCE
_ INSPECT WITHIN 24 HOURS OF A RAIN EVENT AND AT LEAST ONCE EVERY SEVEN CALENDAR DAYS.
_ INSPECT FOR STONE DISPLACEMENT; REPLACE STONES ENSURING PLACEMENT AT FINISHED GRADE.
_ CHECK FOR EROSION OR SCOURING AROUND SIDES OF THE APRON; REPAIR IMMEDIATELY.
_ CHECK FOR PIPING OR UNDERCUTTING; REPAIR IMMEDIATELY.

REFERENCE IN CHAPTER 7 PAGE 121 IN THE INDIANA STORM WATER QUALITY MANUAL

OUTLET EROSION CONTROL PROTECTION

(NO SCALE)

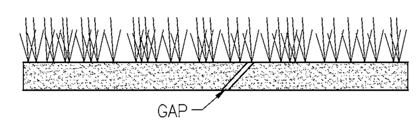

CROSS SECTION

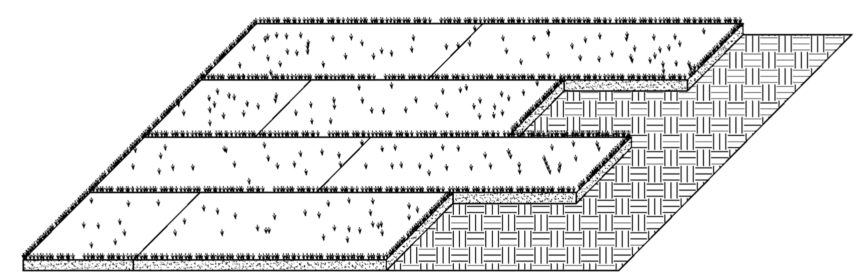

PERSPECTIVE VIEW

SPECIFICATIONS

SITE PREPARATION
_ GRADE THE SITE TO ACHIEVE POSITIVE DRAINAGE.
_ PREPARE A SMOOTH, FIRM SOIL SURFACE AND APPLY SOIL AMENDMENTS. IRRIGATION IRRIGATE AS NEEDED TO ENSURE ROOTING OF SOD.

MATERIALS
_ SOIL AMENDMENTS - SELECT MATERIALS AND RATES AS DETERMINED BY A SOIL TEST (CONTACT YOUR COUNTY SOIL AND WATER CONSERVATION DISTRICT OR COOPERATIVE EXTENSION OFFICE FOR ASSISTANCE AND SOIL INFORMATION, INCLUDING AVAILABLE SOIL TESTING SERVICES.) OR 400 TO 600 POUNDS OF 12-12-12 ANALYSIS FERTILIZER, OR EQUIVALENT.
_ SOD - SELECT A HIGH QUALITY, HEALTHY, VIGOROUS VARIETY WELL ADAPTED TO THE REGION AND COMPATIBLE WITH THE INTENDED USE.

INSTALLATION
SOD SHOULD NOT BE INSTALLED DURING HOT WEATHER, ON DRY SOIL, FROZEN SOIL, COMPACTED CLAY, LOOSE SAND OR GRAVELLY SUBSTRATE SOILS, AGGREGATE, OR PESTICIDE TREATED SOIL. THE IDEAL TIME TO LAY SOD IS MAY 1 TO JUNE 1 OR SEPTEMBER 1 TO SEPTEMBER 30, ALTHOUGH IT CAN BE INSTALLED AS EARLY AS MARCH 15 IF AVAILABLE OR JUNE 1 TO SEPTEMBER 1 IF IRRIGATED.

SITE PREPARATION
1. APPLY TOPSOIL IF EXISTING SOIL CONDITIONS ARE UNSUITABLE FOR ESTABLISHING VEGETATION.
2. GRADE THE SITE TO ACHIEVE POSITIVE DRAINAGE AND CREATE A SMOOTH, FIRM SOIL SURFACE.
3. WHERE APPLICABLE, USE A CHISEL PLOW, DISK, HARROW, OR RAKE TO BREAK UP COMPACTED SOILS AND CREATE A FAVORABLE ROOTING DEPTH OF SIX TO EIGHT INCHES.

SOD BED PREPARATION
1. TEST SOIL TO DETERMINE PH AND NUTRIENT LEVELS.
2. IF SOIL PH IS TOO ACIDIC FOR THE GRASS SOD TO BE INSTALLED, APPLY LIME ACCORDING TO SOIL TEST RESULTS OR AT THE RATE RECOMMENDED BY THE SOD SUPPLIER.
3. APPLY FERTILIZER AS RECOMMENDED BY THE SOIL TEST. IF TESTING WAS NOT DONE, APPLY 400 TO 600 POUNDS PER ACRE OF 12-12-12 ANALYSIS FERTILIZER, OR EQUIVALENT.
4. WORK THE SOIL AMENDMENTS INTO THE UPPER TWO TO FOUR INCHES OF SOIL WITH A DISK OR RAKE OPERATED ACROSS THE SLOPE.
5. RAKE OR HARROW THE AREA TO ACHIEVE A SMOOTH FINAL GRADE AND THEN ROLL OR CULTIPACK THE SOIL SURFACE TO CREATE A FIRM SURFACE ON WHICH TO LAY THE SOD.

LAYING THE SOD
1. INSTALL SOD WITHIN THIRTY-SIX HOURS OF ITS CUTTING.
2. STORE THE SOD IN A SHADED LOCATION DURING INSTALLATION.
3. IMMEDIATELY BEFORE LAYING THE SOD, RAKE THE SOIL SURFACE TO BREAK ANY CRUST. (IF THE WEATHER IS HOT, LIGHTLY IRRIGATE THE SOIL SURFACE PRIOR TO LAYING THE SOD.)
4. LAY SOD STRIPS IN A BRICK-LIKE PATTERN.
5. BUTT ALL JOINTS TIGHTLY AGAINST EACH OTHER (DO NOT STRETCH OR OVERLAP THEM), USING A KNIFE OR MASON'S TROWEL TO TRIM AND FIT SOD INTO IRREGULARLY SHAPED AREAS.
6. ROLL THE SOD LIGHTLY AFTER INSTALLATION TO ENSURE FIRM CONTACT BETWEEN THE SOD AND SOIL.
7. IRRIGATE NEWLY SODDED AREAS UNTIL THE UNDERLYING SOIL IS WET TO A DEPTH OF FOUR INCHES, AND THEN KEEP MOIST UNTIL THE GRASS TAKES ROOT.

SLOPE APPLICATION
1. INSTALL THE SOD STRIPS WITH THE LONGEST DIMENSION PERPENDICULAR TO THE SLOPE.
2. WHERE SLOPES EXCEED A RATIO OF 3:1, STAPLE OR STAKE EACH STRIP AT THE CORNERS AND IN THE MIDDLE.

CHANNEL APPLICATION
(SODDING PROVIDES QUICKER PROTECTION THAN SEEDING AND MAY REDUCE THE RISK OF EARLY WASHOUT.)
1. EXCAVATE THE CHANNEL, ALLOWING FOR THE FULL THICKNESS OF THE SOD.
2. LAY THE SOD STRIPS WITH THE LONGEST DIMENSION PERPENDICULAR TO CHANNEL FLOW.
3. STAPLE OR STAKE EACH STRIP OF SOD AT THE CORNERS AND IN THE MIDDLE.
4. STAPLE JUTE OR BIODEGRADABLE POLYPROPYLENE NETTING OVER THE SODDED AREA TO MINIMIZE THE POTENTIAL FOR WASHOUT DURING ESTABLISHMENT.

MAINTENANCE
_ INSPECT WITHIN 24 HOURS OF EACH RAIN EVENT AND AT LEAST ONCE EVERY SEVEN CALENDAR DAYS UNTIL SOD IS WELL ROOTED.
_ KEEP SOD MOIST UNTIL FULLY ROOTED.
_ AFTER SOD IS WELL-ROOTED (TWO TO THREE WEEKS), MAINTAIN A PLANT HEIGHT OF TWO TO THREE INCHES.
_ TIME MOWING TO AVOID RUTS IN TURF.
_ FERTILIZE TURF AREAS ANNUALLY. APPLY FERTILIZER IN A SPLIT APPLICATION. FOR COOL SEASON GRASSES, APPLY ONE-HALF OF THE FERTILIZER IN LATE SPRING AND ONE-HALF IN EARLY FALL. FOR WARM-SEASON GRASSES, APPLY ONE-THIRD IN EARLY SPRING, ONE-THIRD IN LATE SPRING AND ONE-THIRD IN MID-SUMMER.

REFERENCE IN CHAPTER 7 PAGES 47-50 IN THE INDIANA STORM WATER QUALITY MANUAL

SOD APPLICATION DETAIL

(NO SCALE)

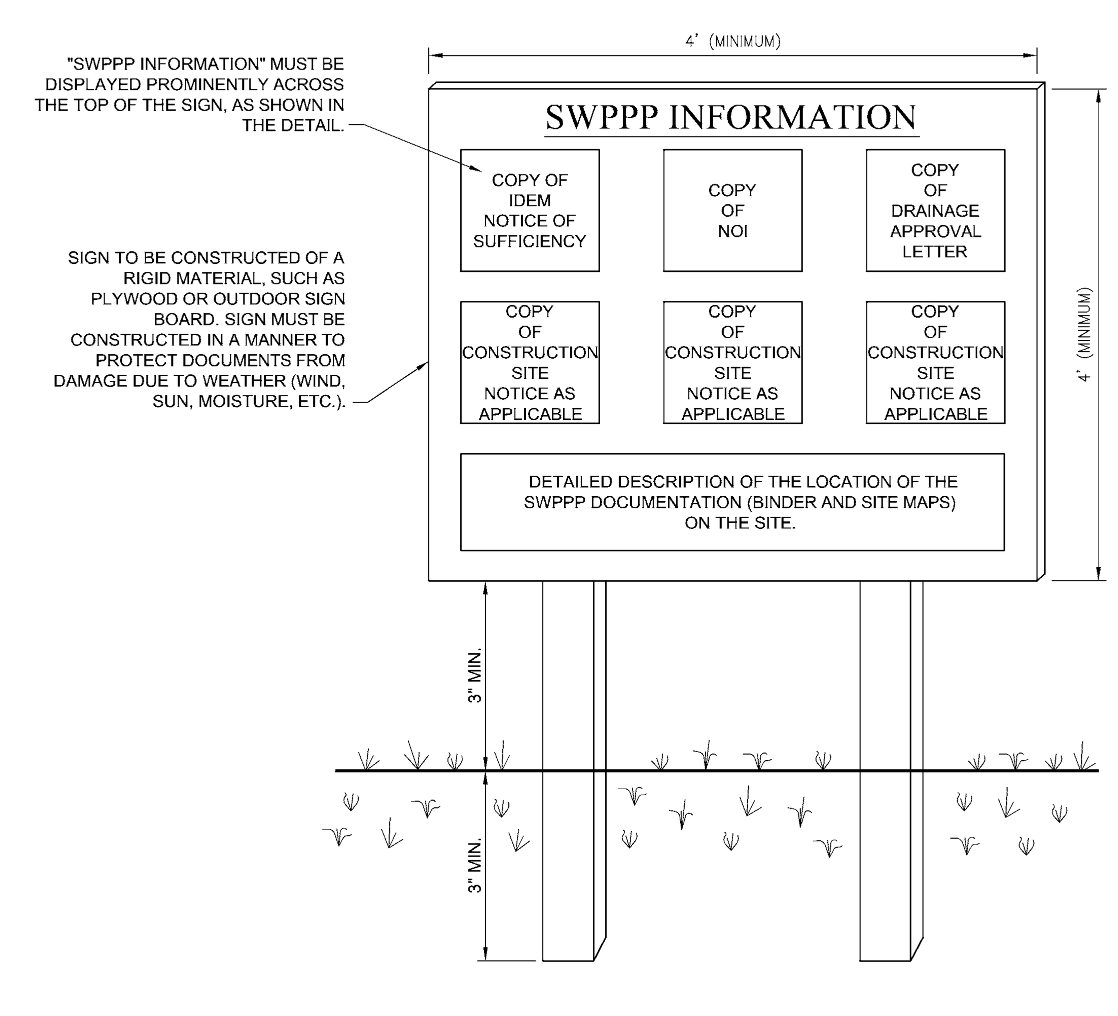

NOTES:
1. THE SWPPP INFORMATION SIGN MUST BE LOCATED NEAR THE CONSTRUCTION EXIT OF THE SITE, SUCH THAT IT IS ACCESSIBLE AND VIEWABLE BY THE GENERAL PUBLIC, BUT NOT OBSTRUCTING VIEWS AS TO CAUSE A SAFETY HAZARD.
2. ALL POSTED DOCUMENTS MUST BE MAINTAINED IN A CLEARLY READABLE CONDITION AT ALL TIMES THROUGHOUT CONSTRUCTION AND UNTIL THE NOTICE-OF-TERMINATION (NOT) IS FILED FOR THE PERMIT.
3. CONTRACTOR SHALL POST OTHER STORM WATER AND/OR EROSION AND SEDIMENT CONTROL RELATED PERMITS ON THE SIGN AS REQUIRED BY THE GOVERNING AGENCY.
4. SIGN SHALL BE LOCATED OUTSIDE OF PUBLIC RIGHT-OF-WAY AND EASEMENTS UNLESS APPROVED BY THE GOVERNING AGENCY.
5. CONTRACTOR IS RESPONSIBLE FOR ENSURING STABILITY OF THE SWPPP INFORMATION SIGN.

SWPPP INFORMATION SIGN

(NO SCALE)

811
Know what's **below.**
Call before you dig.
Within Indiana Call
811 or 800-382-5544
24 Hours a Day, 7 Days a Week.
PER INDIANA STATE LAW IC 8-1-26. IT IS AGAINST THE LAW TO EXCAVATE WITHOUT NOTIFYING THE UNDERGROUND LOCATION SERVICE TWO (2) WORKING DAYS BEFORE COMMENCING WORK.

10505 N. College Avenue
Indianapolis, Indiana 46280
weihe.net

317 | 846 - 6611
800 | 452 - 6408
317 | 843 - 0546 *fax*

ALLAN H. WEIHE, P.E., L.S. - FOUNDER

WEIHE ENGINEERS
Land Surveying | Civil Engineering
Landscape Architecture

REVISIONS AND ISSUES	DATE	BY
SUBMITTED FOR COUNTY SURVEYOR REVIEW	10.16.2015	BJS
ISSUED FOR TAC REVIEW	01.29.2016	BJS

PROJECT NO.: W15.0316
DWG NAME: w150316-C104 swppp det.dwg
DESIGNED BY: RLW
DRAWN BY: RLW
CHECKED BY: BJS
DATE: 01.29.2016

STEVEN SCOTT RUCKER REGISTERED PE11300279 STATE OF INDIANA PROFESSIONAL ENGINEER
APPROVAL PENDING NOT FOR CONSTRUCTION

STEVEN SCOTT RUCKER P.E. 11300279

PREPARED FOR:
Culver's of WESTFIELD
17651 SUN PARK DRIVE, WESTFIELD, IN 46074

SWPPP DETAILS
Part of SW/4, Section 36, Township 19 North, Range 3 East, Washington Township, Hamilton County, Indiana

SHEET NO.
C103

PROJECT NO.
W15.0316

LOCATION: H:\2015\w150316\Engineering\design\conset\w150316-C104 swppp det.dwg
LAYOUT: C103
DATE/TIME: January 28, 2016 – 2:41pm
PLOTTED BY: schoeffb

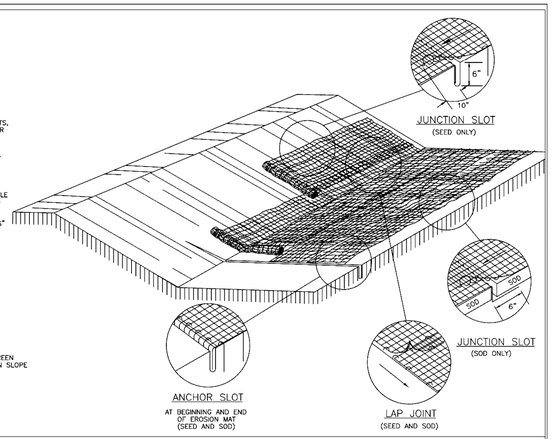

EROSION CONTROL MAT – SLOPE DETAIL

CITY OF WESTFIELD, INDIANA

NEIL B. VANTREES REGISTERED No. 10809092 STATE OF INDIANA PROFESSIONAL ENGINEER

4/1/14
DATE

FIGURE EC–2

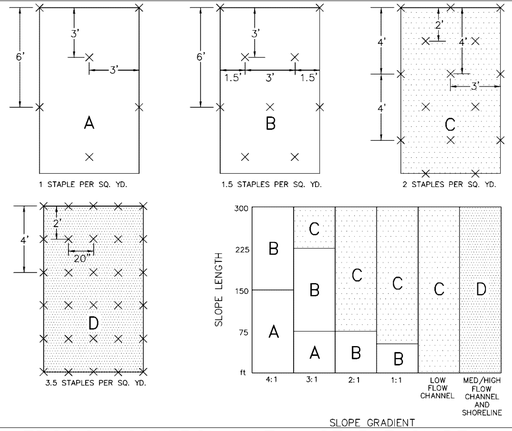

EROSION CONTROL MAT – STAPLE GUIDE

CITY OF WESTFIELD, INDIANA

NEIL B. VANTREES REGISTERED No. 10809092 STATE OF INDIANA PROFESSIONAL ENGINEER

4/1/14
DATE

FIGURE EC–3

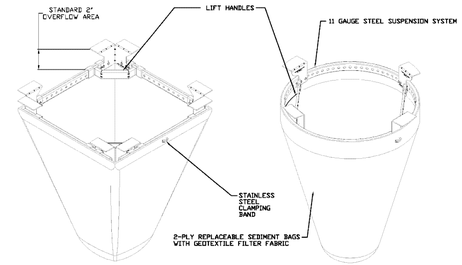

TYPICAL FLAT/RECTANGULAR/ROLLED CURB INLET FILTER

TYPICAL ROUND INLET FILTER

IPP *FLe* Xstorm Inlet Filter Specifications

Material Property	*Test Method*	*Value (min ave)*	
> Inner Filter Bag Specs (2 ft² min vol)		Non-Woven	Woven Mono
Grab Tensile	ASTM D 4632	100 lbs	200 lbs
Puncture Strength	ASTM D 4833	65 lbs	90 lbs
Trapezoidal Tear	ASTM D 4533	45 lbs	75 lbs
UV Resistance	ASTM D 4355	70% at 500 hrs	90%
App Open Size (AOS)	ASTM D 4751	70 sieve (.212 mm)	40 sieve (.425 mm)
Permittivity	ASTM D 4491	2.0 /sec	2.1/sec
Water Flow Rate	ASTM D 4491	145 gpm/sqft	145 gpm/sqft
> Polyester Outer Reinforcement Bag Specifications			
Weight	ASTM D 3776	4.55 oz/sqyd +/- 15%	
Thickness	ASTM D 1777	.040 +/- .005	
> Frame Construction			
Allo Structural Steel; 11 Guage; Zinc Plated	ASTM A 576	Tensile Strength > 58,000 psi; Yield Strength > 36,000 psi	

INSTALLATION:
1. REMOVE GRATE
2. DROP INLET FILTER ONTO LOAD BEARING LIP OF CASTING OR CONCRETE STRUCTURE
3. REPLACE GRATE

INLET PROTECTION

CITY OF WESTFIELD, INDIANA

NEIL B. VANTREES REGISTERED No. 10809092 STATE OF INDIANA PROFESSIONAL ENGINEER

4/1/13
DATE

FIGURE EC–6

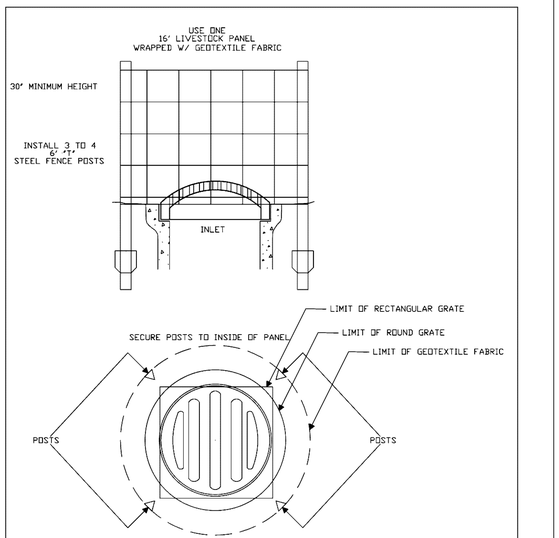

TEMPORARY DITCH INLET PROTECTION

CITY OF WESTFIELD, INDIANA

NEIL B. VANTREES REGISTERED No. 10809092 STATE OF INDIANA PROFESSIONAL ENGINEER

4/1/13
DATE

FIGURE EC–1

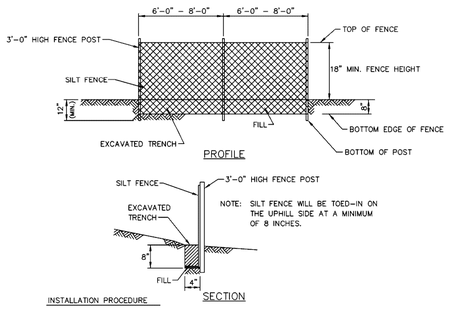

INSTALLATION PROCEDURE

1. 2" x 2" X 36" HARDWOOD OR STEEL FENCE POSTS ARE INSTALLED 6' APART (w/ EXTRA STRENGTH FABRIC WITHOUT WIRE BACKING) OR 8' APART (w/ WIRE BACKING), ON A SLIGHT ANGLE TOWARD THE ANTICIPATED RUNOFF SOURCE.
2. A TRENCH 4" WIDE BY 8" DEEP IS DUG ALONG THE UPHILL SIDE OF THE FENCE LINE.
3. THE SILT FENCE IS UNROLLED AND LAID OUT ALONG THE FENCE LINE.
4. AT THIS TIME THE LOWER 8" OF THE FENCE IS LAID IN THE TRENCH AND CURLED TOWARD THE EROSION SOURCE. THE TRENCH IS THEN BACKFILLED WITH SOIL.

SILT FENCE DETAIL

CITY OF WESTFIELD, INDIANA

NEIL B. VANTREES REGISTERED No. 10809092 STATE OF INDIANA PROFESSIONAL ENGINEER

4/1/13
DATE

FIGURE EC–4

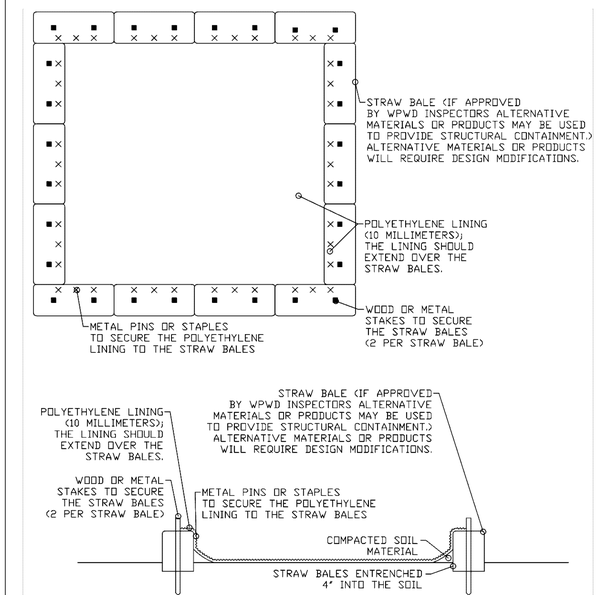

CONCRETE WASHOUT DETAIL

CITY OF WESTFIELD, INDIANA

NEIL B. VANTREES REGISTERED No. 10809092 STATE OF INDIANA PROFESSIONAL ENGINEER

4/1/13
DATE

FIGURE EC–5

WEIHE ENGINEERS
Land Surveying | Civil Engineering
Landscape Architecture
10505 N. College Avenue
Indianapolis, Indiana 46280
weihe.net
317 | 846 - 6611
800 | 452 - 6408
317 | 843 - 0546 *fax*
ALLAN H. WEIHE, P.E., L.S. - FOUNDER

REVISIONS AND ISSUES	DATE	BY
SUBMITTED FOR COUNTY SURVEYOR REVIEW	10.15.2015	BJS
ISSUED FOR TAC REVIEW	01.29.2016	BJS

PROJECT NO.: W15.0316
DWG. NAME: w150316-C104 swppp det.dwg
DESIGNED BY: RJW
DRAWN BY: RJW
CHECKED BY: BJS
DATE: 01.29.2016

STEVEN SCOTT RUCKER P.E. 11300279
REGISTERED PROFESSIONAL ENGINEER
STATE OF INDIANA
NOT VALID UNLESS PRINTED

STEVEN SCOTT RUCKER P.E. 11300279

PREPARED FOR:
Ontrans

of WESTFIELD
17651 SUN PARK DRIVE, WESTFIELD, IN 46074

SWPPP DETAILS

Part of SW/4, Section 36, Township 19 North, Range 3 East, Washington Township, Hamilton County, Indiana

SHEET NO.
C104

PROJECT NO.
W15.0316

811 Know what's below. Call before you dig.
Within Indiana Call 811 or 800-382-5544
24 Hours a Day, 7 Days a Week.
PER INDIANA STATE LAW IC 8-1-26, IT IS AGAINST THE LAW TO EXCAVATE WITHOUT NOTIFYING THE UNDERGROUND LOCATION SERVICE TWO (2) WORKING DAYS BEFORE COMMENCING WORK.

LOCATION: H:\2015\w150316\Engineering\Design\Layout\w150316-C104 swppp det.dwg
USER: rucker
DATE/TIME: January 28, 2016 - 2:41pm
PLOTTED BY: schoettle

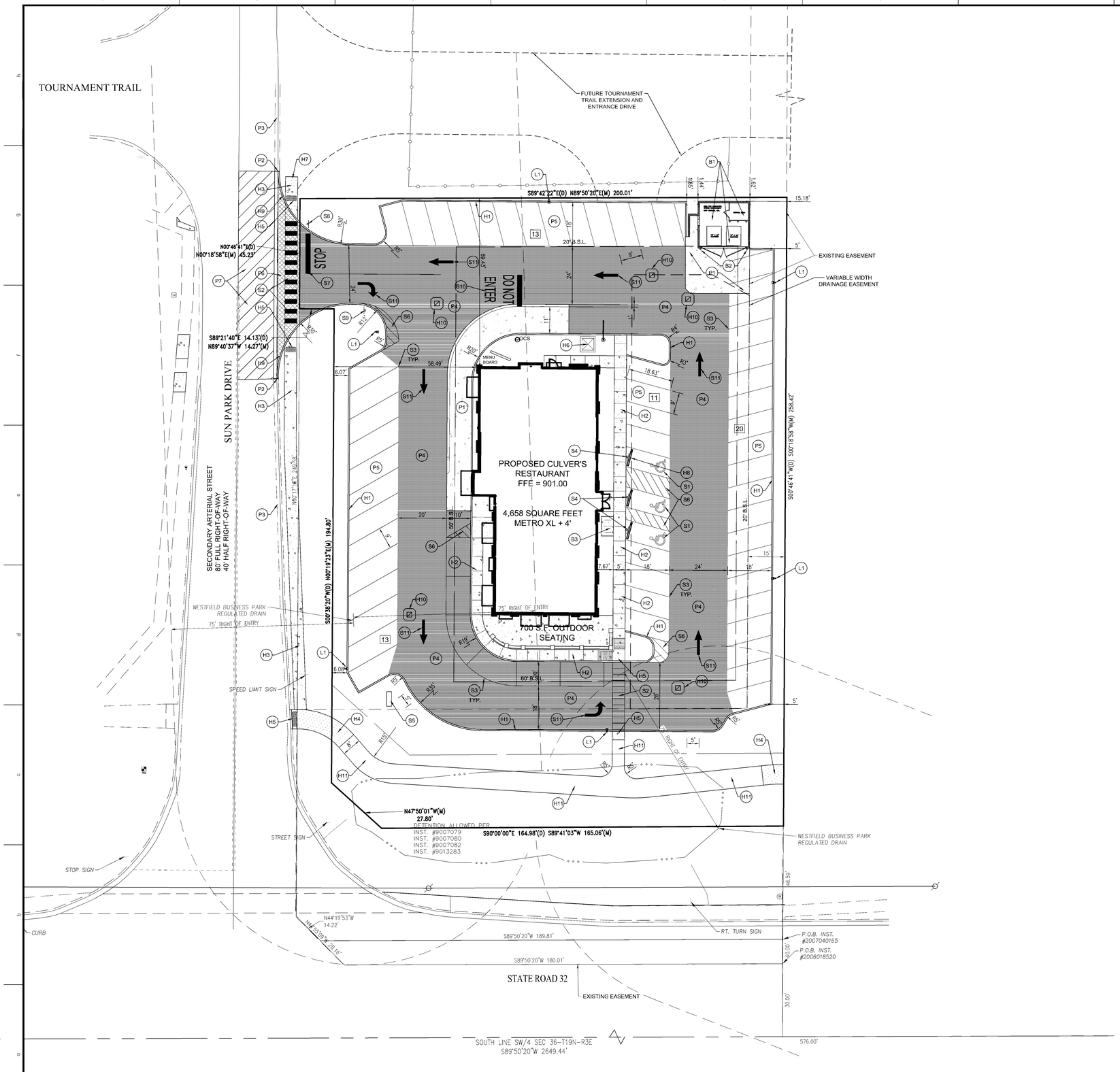

SITE PLAN NOTES

PAVEMENT

- (P1) HEAVY DUTY CONCRETE PAVEMENT
- (P2) MATCH EXISTING CURB LINE
- (P3) EXISTING RIGHT OF WAY CURB.
- (P4) HEAVY DUTY ASPHALT
- (P5) STANDARD DUTY ASPHALT
- (P6) R.O.W. PAVEMENT PER DETAIL P-3 IN CITY STANDARDS.
- (P7) MILL AND RESURFACE SUN PARK DRIVE 1 ½", OR AS DIRECTED BY WESTFIELD DPW. CONFIRM LIMITS WITH WESTFIELD DPW PRIOR TO COMMENCING.

HARDSCAPE

- (H1) 6" CURB
- (H2) INTEGRAL WALK AND CURB
- (H3) CONCRETE SIDEWALK
- (H4) 8' ASPHALT WALKING PATH ACCORDING TO DETAIL P-16 OF CITY STANDARDS. EXTEND PATH WHERE SHOWN FOR CONNECTION TO THE NEXT PARCEL. IF NEXT PARCEL PLACES PATH FIRST, CONNECT TO THEIR TERMINUS LOCATION.
- (H5) ADA ACCESSIBLE RAMP WITH DETECTABLE WARNING.
  - * PRIVATE WARNINGS TO BE GROOVED CONCRETE
  - * RIGHT OF WAY WARNINGS TO BE TRUNCATED DOMES
- (H6) TRANSFORMER PAD LOCATION
- (H7) EXTEND SIDEWALK WHERE SHOWN FOR CONNECTION TO THE NEXT PARCEL. IF NEXT PARCEL PLACES SIDEWALK FIRST, CONNECT TO THEIR TERMINUS LOCATION.
- (H8) CONCRETE PARKING BARRIER
- (H9) TRANSITION STANDING CURB INTO RIGHT OF WAY CURB AND MAINTAIN A 1" FLOWLINE ACROSS THE ENTRY DRIVES.
- (H10) PROVIDE CONRETE COLLAR FOR INLET
- (H11) RAISED 8' WIDE METAL WALKWAY TO BE CONSTRUCTED THROUGH THE EXISTING DETENTION. DETAILED PLANS TO BE PROVIDED BY THE OWNER.

BUILDING ACCESSORIES

- (B1) DUMPSTER ENCLOSURE PER ARCHITECTURAL PLANS
- (B2) PIPE BOLLARDS
- (B3) BIKE RACK

SIGNAGE & MARKINGS

- (S1) ADA PARKING SPACE
- (S2) PEDESTRIAN CROSSWALK
- (S3) 4" PAINTED WHITE SOLID LINES (TYP)
- (S4) ADA PARKING SIGN
- (S5) GROUND MOUNTED SIGN
- (S6) PAINTED ISLAND
- (S7) PAINTED 24" STOP BAR
- (S8) STOP SIGN
- (S9) "RIGHT TURN ONLY" SIGN
- (S10) PAINTED "DO NOT ENTER" STRIPING
- (S11) PAINTED DIRECTIONAL MARKING

ACCESSORIES

- (L1) LIGHT POLE AND BASE
  - REFER TO THE ELECTRICAL PLANS FOR CIRCUITRY AND LIGHT POLE BASE DETAIL.

SITE PLAN GENERAL NOTES

1. THE CONTRACTOR SHALL BE RESPONSIBLE FOR OBTAINING, OR VERIFYING THAT ALL PERMITS AND APPROVALS ARE OBTAINED FROM THE RESPECTIVE CITY, COUNTY, AND STATE AGENCIES PRIOR TO STARTING CONSTRUCTION.
2. ALL QUANTITIES GIVEN ON THESE PRINTS, VERBALLY OR IN THE SCOPE OF WORK SECTION ARE ESTIMATES AND SHALL BE CONFIRMED BY THE BIDDING CONTRACTORS.
3. OCCUPATIONAL SAFETY AND HEALTH ADMINISTRATION (OSHA) STANDARDS FOR EXCAVATIONS; FINAL RULE 29 CFR PART 1926, SUBPART "P" APPLIES TO ALL EXCAVATIONS EXCEEDING FIVE (5) FEET IN DEPTH. IN ADDITION, EXCAVATION EXCEEDING TWENTY (20) FEET IN DEPTH REQUIRE THE DESIGN OF A TRENCH SAFETY SYSTEM BY A REGISTERED PROFESSIONAL ENGINEER.
4. IT SHALL BE THE RESPONSIBILITY OF THE DEVELOPER AND CONTRACTOR TO MAINTAIN QUALITY CONTROL THROUGHOUT THIS PROJECT.
5. TEMPORARY TRAFFIC CONTROL DURING CONSTRUCTION TO CONFORM TO APPLICABLE LOCAL STANDARDS.
6. BEARINGS, DIMENSIONS, AND EASEMENTS ARE SHOWN FOR REFERENCE ONLY. SEE RECORD SURVEYS AND PLATS FOR EXACT INFORMATION.
7. THE ENGINEER AND/OR OWNER DISCLAIM ANY ROLE IN THE CONSTRUCTION MEANS AND METHODS ASSOCIATED WITH THE PROJECT.
8. ALL DIMENSIONS ARE BASED ON FACE OF CURB OR BACK OF ROLL CURB OR FACE OF BUILDING.
9. SEE ARCHITECTURAL PLANS FOR DETAILS OF BUILDING, BUILDING DIMENSIONS, ATM RELATED DETAILS, AND SIGNAGE SPECIFICATIONS. DO NOT STAKE BUILDING FROM THESE PLANS.
10. COORDINATE CONSTRUCTION ACTIVITIES WITH ADJOINING WORK IF APPLICABLE. VERIFY EXTENT OF ADJOINING WORK AND COORDINATE AS REQUIRED.
11. FIELD VERIFY EXISTING CURBS AND TAPER PROPOSED VERTICAL CURBS TO MATCH WITHIN A MIN. OF THREE (3) FEET.
12. ± DIMENSIONS INDICATE FIELD DIMENSION ADJUSTMENT AREA BASED ON ACTUAL FIELD LAYOUT COORDINATES.
13. THE CONTRACTOR SHALL VERIFY ALL DIMENSIONS IN THE FIELD PRIOR TO START OF CONSTRUCTION. THE CONTRACTOR SHALL BE RESPONSIBLE FOR ALL FIELD DIMENSIONS. IF ANY DISCREPANCIES ARE FOUND IN THESE PLANS FROM ACTUAL FIELD CONDITIONS, THE CONTRACTOR SHALL NOTIFY THE ENGINEER IMMEDIATELY.
14. PROVIDE SMOOTH TRANSITION FROM NEWLY PAVED AREAS TO EXISTING AREAS AS NECESSARY. ALL AREAS WHERE PROPOSED PAVEMENT MEETS EXISTING PAVEMENT, THE EXISTING EDGE OF PAVEMENT SHALL BE FREE OF ALL LOOSE DEBRIS. THE EDGE OF EXISTING ASPHALT PAVEMENT SHALL BE PROPERLY SEALED WITH A TACK COAT MATERIAL IN ALL AREAS WHERE NEW ASPHALT PAVEMENT IS INDICATED TO JOIN EXISTING.
15. RESURFACE OR RECONSTRUCT AT LEAST TO ORIGINAL CONDITIONS ALL AREAS WHERE THE EXISTING PAVEMENT OR LAWNS ARE DAMAGED DURING CONSTRUCTION FROM TRAFFIC BY CONTRACTORS, SUBCONTRACTORS, OR SUPPLIERS AFTER CONSTRUCTION WORK IS COMPLETE.
16. THE CONTRACTOR SHALL PROTECT AND NOT DESTROY THE PROPERTY CORNER MONUMENTS DURING CONSTRUCTION.
17. REFER TO ARCHITECTURAL PLANS FOR BUILDING ACCESSORY DETAILS.
18. REFER TO SHEETS C201 AND C202 FOR SITE PLAN DETAILS UNLESS OTHERWISE NOTED.

SITE DATA

SITE AREA = 1.11 AC
BUILDING AREA = 4658 S.F.

ZONING = GB
- FRONT YARD BSL REQUIRED (SR 32)= 60 FT
- FRONT YARD BSL REQUIRED (S.P.D) = 50 FT
- REAR YARD BSL REQUIRED = 20 FT
- EAST SIDE YARD BSL REQUIRED = 20 FT

PARKING REQUIRED:
- PARKING REQUIREMENT: ONE (1) SPACE FOR EACH THREE (3) SEATS OF SERVING AREA, PLUS ONE (1) SPACE FOR EACH EMPLOYEE ON PRIMARY SHIFT
- PARKING REQUIRED = 50 SPACES
- PARKING DIMENSIONS = 9' x 18'

PARKING PROVIDED:
- 54 - STANDARD SPACES
- 3 - ADA SPACES
- 57 - TOTAL SPACES

BICYCLE PARKING:
- 1 BIKE PER 30 VEHICULAR SPACES
- 1 REQUIRED FOR SITE. INSTALL 3 LOOP BIKE RACK WHERE SHOWN

OPEN SPACE:
- 20.0% REQUIRED
- 29% PROVIDED (BEFORE 30' GREENBELT DEDICATION)

SITE PLAN LEGEND

UTILITIES

- FIRE HYDRANT
- CHILLED WATER MANHOLE
- WATER MANHOLE
- SPRINKLER CONTROL BOX
- SPRINKLER CONTROL VALVE
- WATER METER
- GAS METER
- ELECTRIC MANHOLE
- ELECTRIC METER
- ELECTRICAL RISER
- TRANSFORMER
- GUY ANCHOR
- ELECTRIC JUNCTION BOX
- GENERATOR
- UTILITY POLE
- UTILITY POLE W/ TRANSFORMER
- MONITORING WELL
- ORNAMENTAL LIGHT
- STREET LIGHT
- PARKING LOT LIGHT (1 HEAD)
- COMMUNICATIONS JUNCTION BOX
- COMMUNICATIONS MANHOLE
- COMMUNICATIONS PEDESTAL
- COMMUNICATIONS RISER
- TRAFFIC SIGNAL POLE
- STORM MANHOLE
- DOWN SPOUT

OTHER

- FLAG POLE
- SIGN
- POST
- GATE POST
- BOLLARD
- PARKING METER
- PARKING WHEEL STOP
- HANDICAPPED SPACE
- PARKING COUNT

LINE TYPES

- RIGHT OF WAY LINE
- FENCE
- GUARD RAIL
- BUILDING SETBACK LINE
- BOUNDARY LINE
- SECTION LINE

PAVEMENT

- STANDARD DUTY ASPHALT
- HEAVY DUTY ASPHALT
- CONCRETE PAVEMENT
- RIGHT OF WAY PAVEMENT

ABBREVIATIONS

ROW	RIGHT OF WAY
BSL	BUILDING SETBACK LINE
ESMT	EASEMENT
D.&U.E.	DRAINAGE AND UTILITY EASEMENT
FFE	FINISH FLOOR ELEVATION

N W E S

SCALE: 1" = 20'

0 10 20 40

Know what's below. Call before you dig.
Within Indiana Call 811 or 800-382-5544
24 Hours a Day, 7 Days a Week.
PER INDIANA STATE LAW IC 8-1-26, IT IS AGAINST THE LAW TO EXCAVATE WITHOUT NOTIFYING THE UNDERGROUND LOCATION SERVICE TWO (2) WORKING DAYS BEFORE COMMENCING WORK.

10505 N. College Avenue
Indianapolis, Indiana 46280
weihe.net
317 | 846 - 6611
800 | 452 - 6408
317 | 843 - 0546 fax
ALLAN H. WEIHE, P.E., L.S. - FOUNDER

WEIHE ENGINEERS
Land Surveying | Civil Engineering
Landscape Architecture

REVISIONS AND ISSUES	DATE	BY
RESUBMITTED FOR COUNTY SURVEYOR REVIEW	10.16.2015	BJS
ISSUED FOR TAC REVIEW	01.29.2016	BJS

PROJECT NO.: W15.0316
DWG. NAME: w150316-C200 site.dwg
DESIGNED BY: RJW
DRAWN BY: RJW
CHECKED BY: BJS
DATE: 01.29.2016

STEVEN SCOTT RUCKER P.E. 11300279

PREPARED FOR: Culver's

of WESTFIELD
17651 SUN PARK DRIVE, WESTFIELD, IN 46074
SITE PLAN
Part of SW/4, Section 36, Township 19 North, Range 3 East, Washington Township, Hamilton County, Indiana

SHEET NO.
C200

PROJECT NO.
W15.0316

LOCATION: H:_2015\w150316\Engineering\Design\Xcosse\w150316 - C200 site.dwg
LAYOUT: C200
DATE/TIME: January 28, 2016 - 2:42pm
PLOTTED BY: schaefe

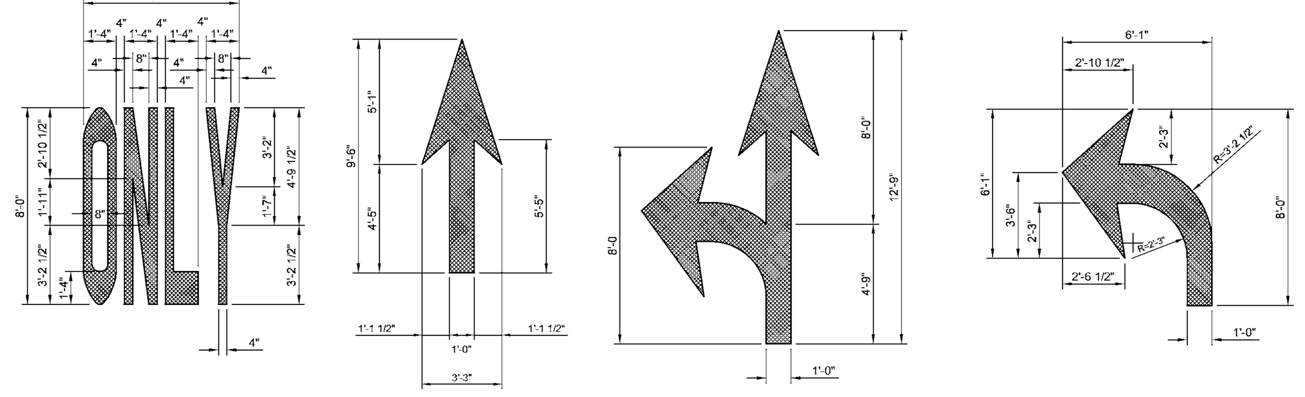

NOTE:
LANE CONTROL ARROWS SHALL BE WHITE AND SHALL BE PLACED IN ACCORDANCE WITH IMUTCD. THE ARROW SHOULD BE 20 FEET IN ADVANCE OF THE STOPLINE. THE WORD "ONLY" SHOULD BE LOCATED IN ADVANCE OF THE PAVEMENT ARROW.

TRAFFIC MARKING DETAILS
(NO SCALE)

NOTE:
TYPICAL SIZES FOR NORMAL INSTALLATION; SIZES MAY BE REDUCED APPROXIMATELY ONE-THIRD FOR LOW-SPEED URBAN CONDITIONS.

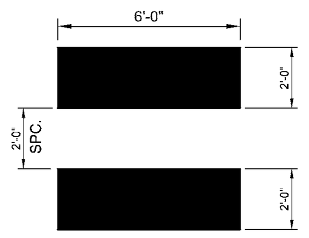

NOTES:
- CONTRACTOR SHALL PROPERLY RE-ALIGN STOP BARS AND OTHER PAVEMENT MARKERS AS NECESSARY TO INSTALL CROSSWALK.
- CROSSWALK STRIPES SHALL BE APPLIED IN ACCORDANCE WITH MUNICIPAL STANDARDS.
- STRIPES ARE PAINTED WHITE.
- CONTRACTOR SHALL APPLY LONG LIFE MARKING MATERIALS ONLY.

PEDESTRIAN CROSSWALK
(NO SCALE)

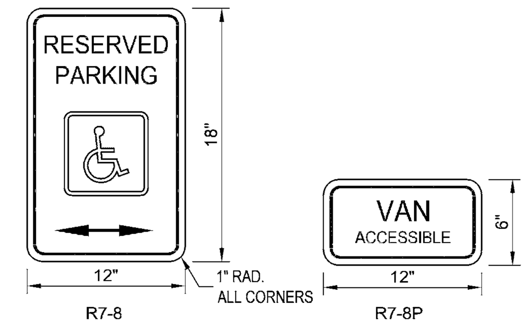

NOTE:
12"X18" 18 GAUGE HOT DIP GALVANIZED NON-REFLECTIVE SIGN WITH 12' POST DRIVEN 4 FEET INTO GROUND. POST SHALL BE 12' LONG GALVANIZED 2 1/2" OD STEEL POSTS. SET BOTTOM OF SIGN 7' ABOVE GRADE.

NOTE:
WHERE PARKING SPACES THAT ARE RESERVED FOR PERSONS WITH DISABILITIES ARE DESIGNATED TO ACCOMMODATE WHEELCHAIR VANS, A VAN ACCESSIBLE (R7-8P) PLAQUE SHALL BE MOUNTED BELOW THE R7-8 SIGN. THE R7-8SIGN SHALL HAVE A GREEN LEGEND AND BORDER AND A WHITE WHEELCHAIR SYMBOL ON A BLUE SQUARE ALL ON A WHITE BACKGROUND. THE R7-8P PLAQUE SHALL HAVE A GREEN LEGEND AND BORDER ON A WHITE BACKGROUND.

ADA SIGNS
(NO SCALE)

NOTE:
ALL STRIPES TO BE PAINTED WHITE.
MINIMUM = 3"
SPECIAL = 4"

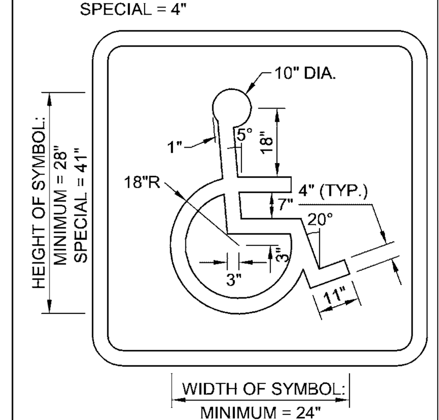

NOTE:
BLUE BACKGROUND AND WHITE BORDER ARE OPTIONAL

ADA PARKING SYMBOL DETAIL
(NO SCALE)

NOTE:
ALL PAINT TO BE BLUE NON-SKID SURFACE APPLICATION OF CILICA SAND OR GLASS BEAD BY METHOD OF MIXTURE AND OR BROADCASTING.

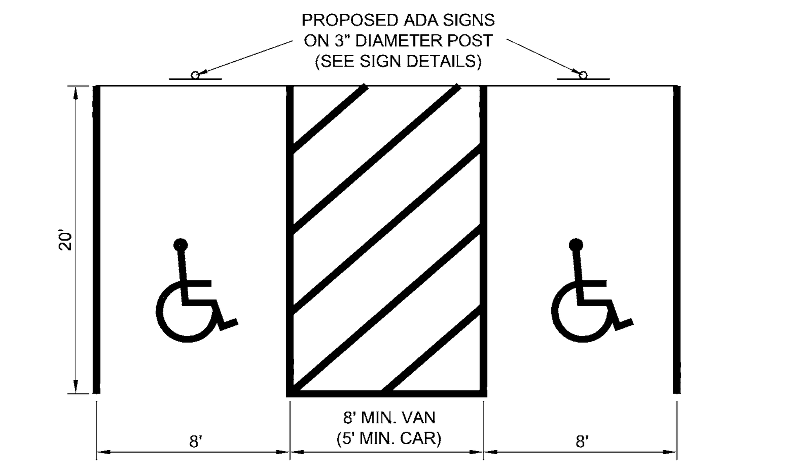

"ADA" PARKING SPACES
(NO SCALE)

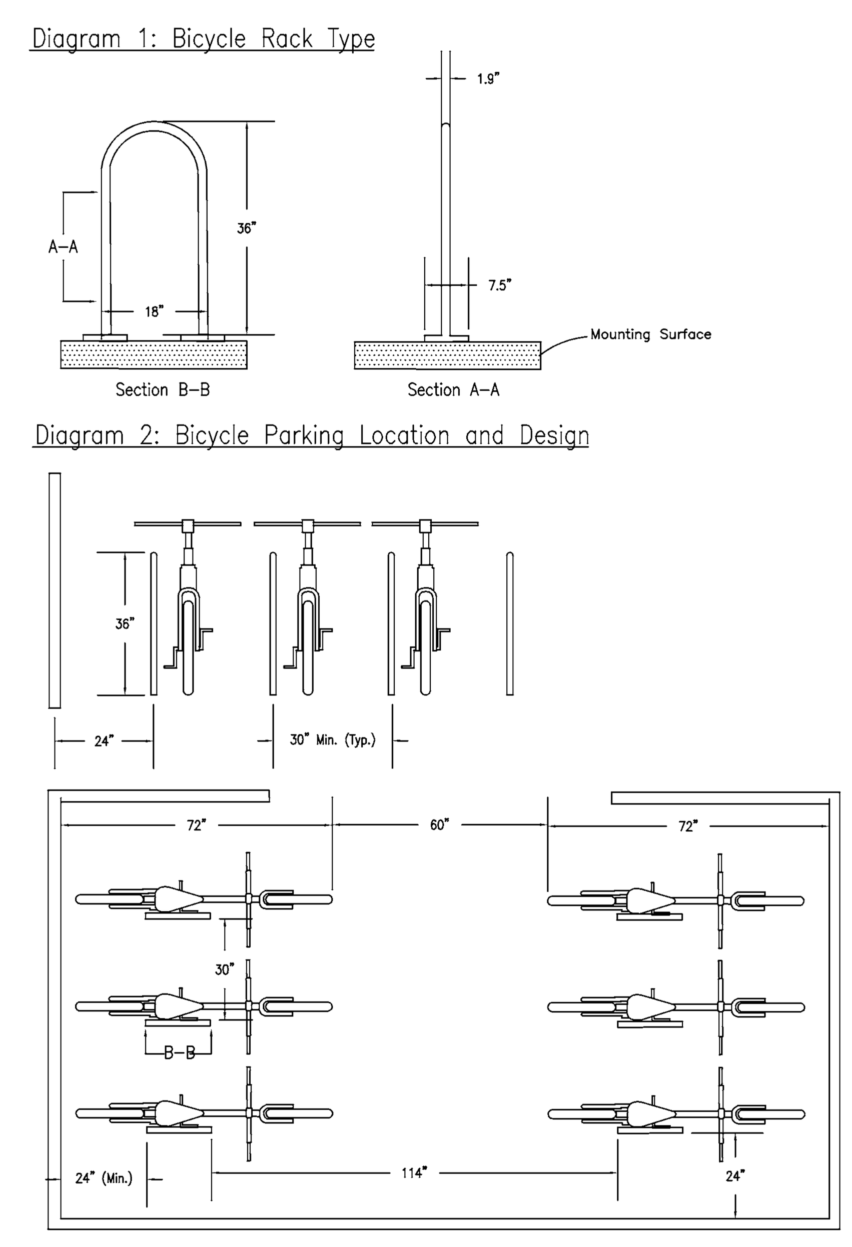

BICYCLE PARKING DETAIL
(NO SCALE)

ALL SIGNS SHALL COMPLY WITH U.S. DEPARTMENT OF TRANSPORTATION, FEDERAL HIGHWAY ADMINISTRATION'S "MANUAL OF UNIFORM TRAFFIC CONTROL DEVICES", LOCAL CODES AND AS SPECIFIED. MOUNT SIGNS TO POST IN ACCORDANCE WITH MANUFACTURER'S INSTRUCTIONS.

WHERE PARKING SPACES THAT ARE RESERVED FOR PERSONS WITH DISABILITIES ARE DESIGNATED TO ACCOMMODATE WHEELCHAIR VANS, A VAN ACCESSIBLE (R7-8P) PLAQUE SHALL BE MOUNTED BELOW THE R7-8 SIGN. THE R7-8SIGN SHALL HAVE A GREEN LEGEND AND BORDER AND A WHITE WHEELCHAIR SYMBOL ON A BLUE SQUARE ALL ON A WHITE BACKGROUND. THE R7-8P PLAQUE SHALL HAVE A GREEN LEGEND AND BORDER ON A WHITE BACKGROUND.

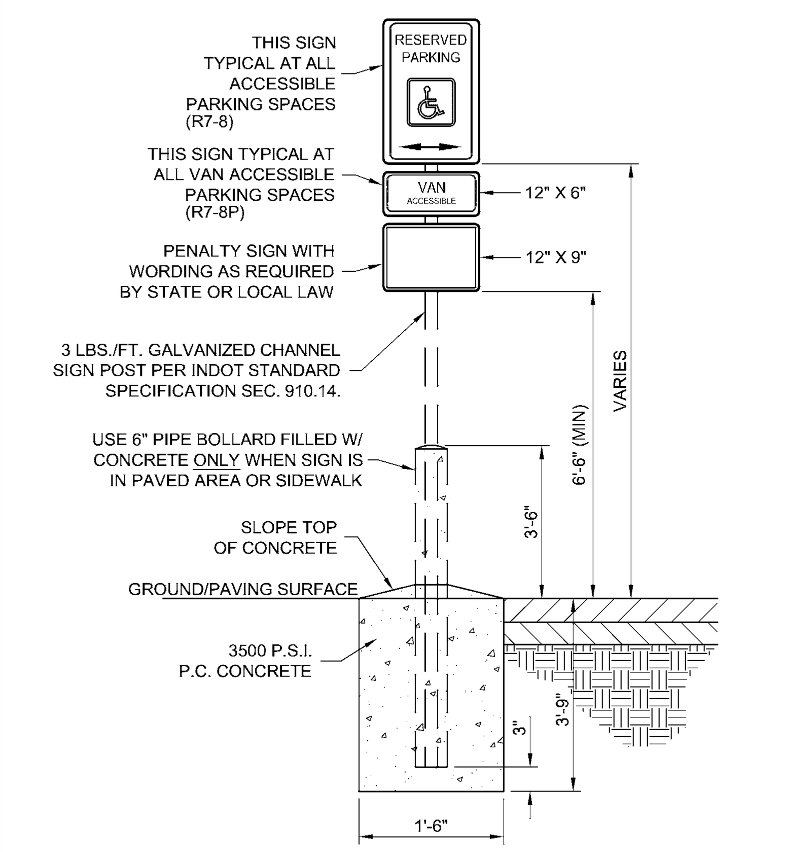

ADA SIGN BOLLARD MOUNT DETAIL
(NO SCALE)

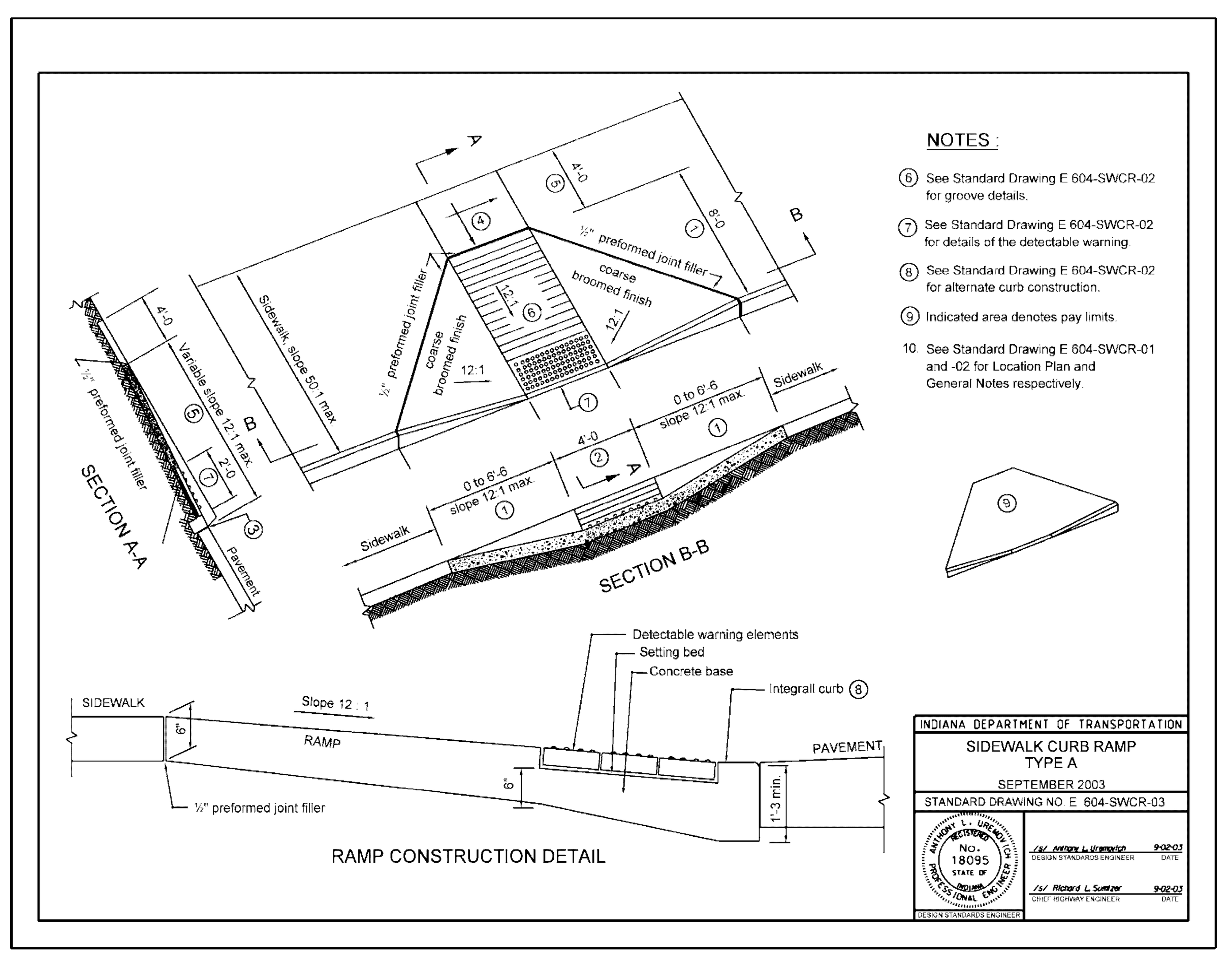

NOTES :

(6) See Standard Drawing E 604-SWCR-02 for groove details.

(7) See Standard Drawing E 604-SWCR-02 for details of the detectable warning.

(8) See Standard Drawing E 604-SWCR-02 for alternate curb construction.

(9) Indicated area denotes pay limits.

10. See Standard Drawing E 604-SWCR-01 and -02 for Location Plan and General Notes respectively.

INDIANA DEPARTMENT OF TRANSPORTATION
SIDEWALK CURB RAMP TYPE A
SEPTEMBER 2003
STANDARD DRAWING NO. E 604-SWCR-03
/s/ Anthony L. Uremovich 9-02-03 DESIGN STANDARDS ENGINEER DATE
/s/ Richard L. Smutzer 9-02-03 CHIEF HIGHWAY ENGINEER DATE

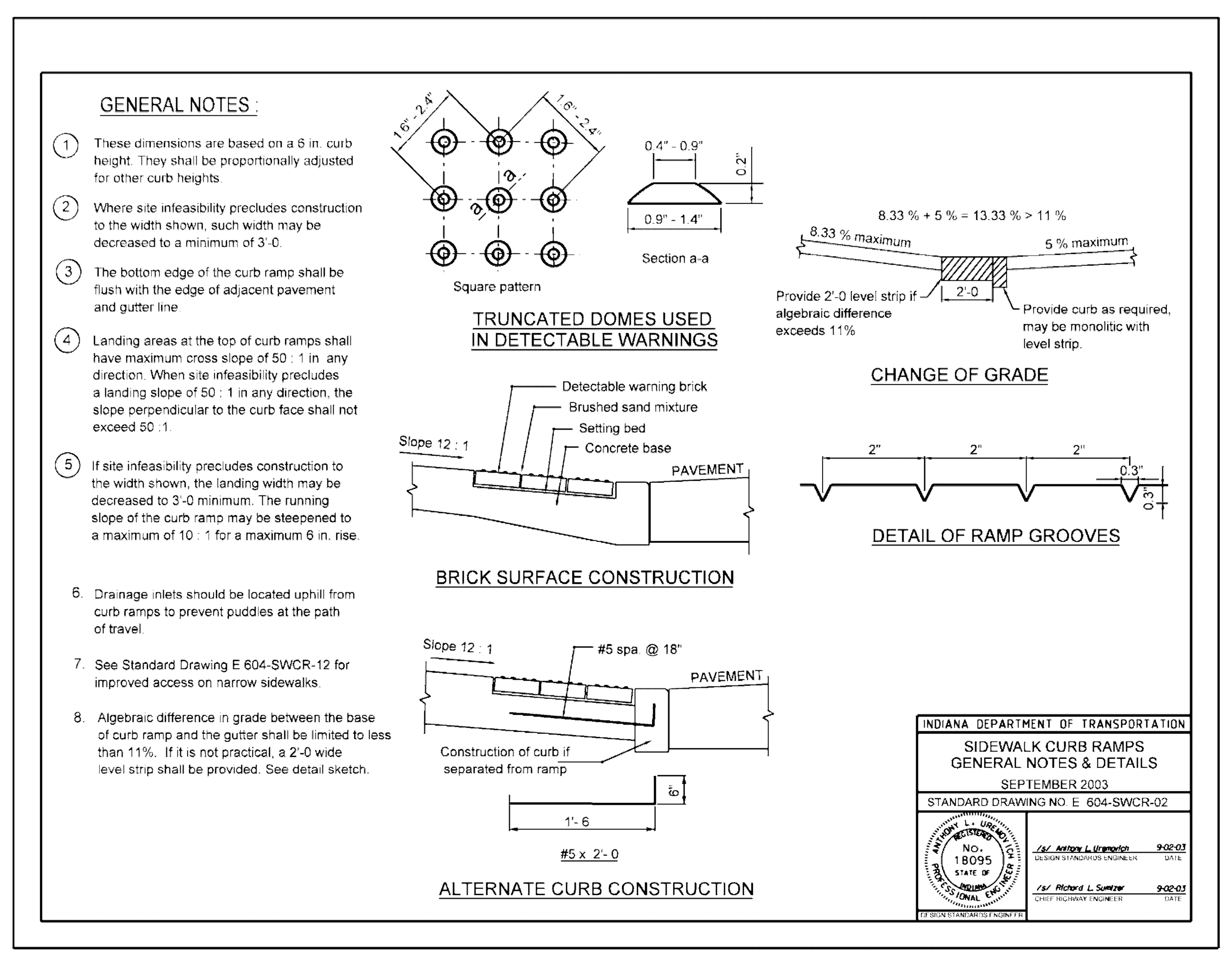

GENERAL NOTES :

1. These dimensions are based on a 6 in. curb height. They shall be proportionally adjusted for other curb heights.
2. Where site infeasibility precludes construction to the width shown, such width may be decreased to a minimum of 3'-0.
3. The bottom edge of the curb ramp shall be flush with the edge of adjacent pavement and gutter line.
4. Landing areas at the top of curb ramps shall have maximum cross slope of 50 : 1 in any direction. When site infeasibility precludes a landing slope of 50 : 1 in any direction, the slope perpendicular to the curb face shall not exceed 50 :1.
5. If site infeasibility precludes construction to the width shown, the landing width may be decreased to 3'-0 minimum. The running slope of the curb ramp may be steepened to a maximum of 10 : 1 for a maximum 6 in. rise.
6. Drainage inlets should be located uphill from curb ramps to prevent puddles at the path of travel.
7. See Standard Drawing E 604-SWCR-12 for improved access on narrow sidewalks.
8. Algebraic difference in grade between the base of curb ramp and the gutter shall be limited to less than 11%. If it is not practical, a 2'-0 wide level strip shall be provided. See detail sketch.

INDIANA DEPARTMENT OF TRANSPORTATION
SIDEWALK CURB RAMPS GENERAL NOTES & DETAILS
SEPTEMBER 2003
STANDARD DRAWING NO. E 604-SWCR-02
/s/ Anthony L. Uremovich 9-02-03 DESIGN STANDARDS ENGINEER DATE
/s/ Richard L. Smutzer 9-02-03 CHIEF HIGHWAY ENGINEER DATE

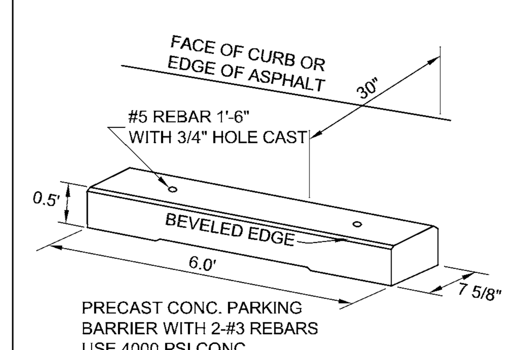

PARKING BARRIER
(NO SCALE)

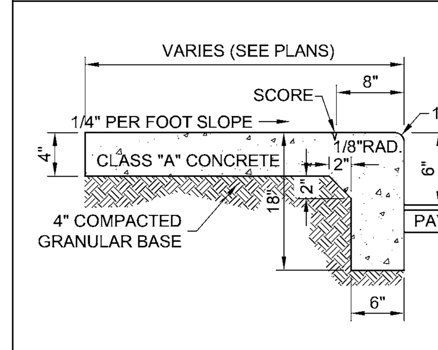

INTEGRAL WALK AND CURB DETAIL
(NO SCALE)

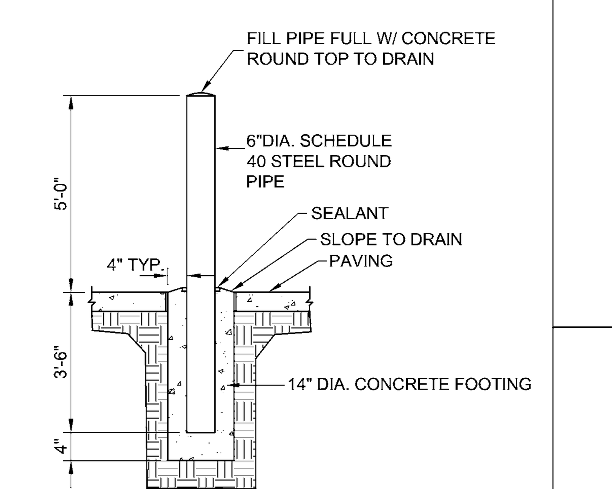

PIPE BOLLARD DETAIL
(NO SCALE)

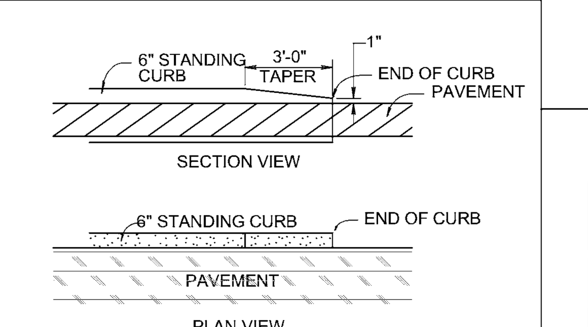

CURB TAPER DETAIL
(NO SCALE)

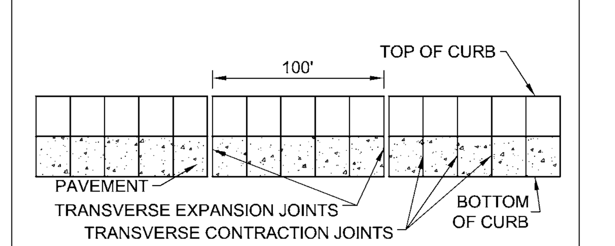

CURB JOINT DETAIL
(NO SCALE)

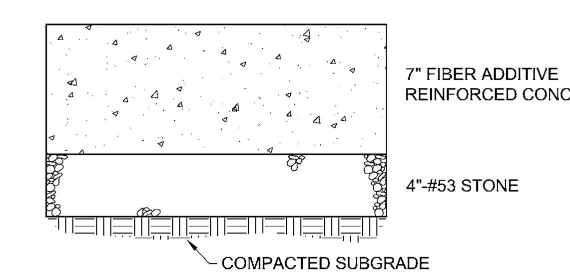

CONCRETE PAVING SECTION
(NO SCALE)

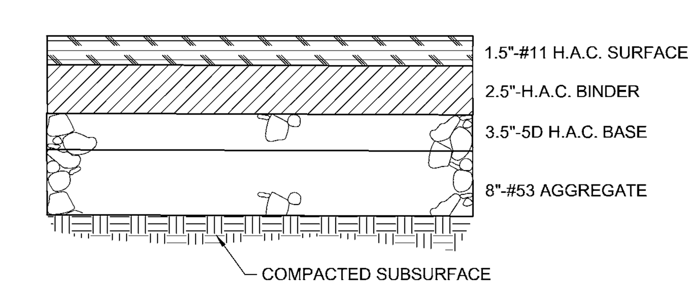

HEAVY DUTY ASPHALT PAVING SECTION (ALT.)
(NO SCALE)

Know what's **below.** **Call** before you dig.
Within Indiana Call
811 or 800-382-5544
24 Hours a Day, 7 Days a Week.
PER INDIANA STATE LAW IC 8-1-26. IT IS AGAINST THE LAW TO EXCAVATE WITHOUT NOTIFYING THE UNDERGROUND LOCATION SERVICE TWO (2) WORKING DAYS BEFORE COMMENCING WORK.

10505 N. College Avenue
Indianapolis, Indiana 46280
weihe.net
317 | 846 - 6611
800 | 452 - 6408
317 | 843 - 0546 *fax*
ALLAN H. WEIHE, P.E., L.S. - FOUNDER

WEIHE ENGINEERS
Land Surveying | Civil Engineering
Landscape Architecture

PROJECT NO.: W15.0316	DWG NAME: w150316-C201 site det.dwg	DESIGNED BY: RLW	DRAWN BY: RLW	CHECKED BY: BJS	DATE: 01.29.2016

REVISIONS AND ISSUES	DATE	BY
SUBMITTED FOR COUNTY SURVEYOR REVIEW	10.16.2015	BJS
ISSUED FOR TAC REVIEW	01.29.2016	BJS

STEVEN SCOTT RUCKER REGISTERED PE11300279 STATE OF INDIANA PROFESSIONAL ENGINEER
APPROVAL PENDING NOT FOR CONSTRUCTION

STEVEN SCOTT RUCKER P.E. 11300279

PREPARED FOR:
Culver's of WESTFIELD
17651 SUN PARK DRIVE, WESTFIELD, IN 46074

SITE DETAILS
Part of SW/4, Section 36, Township 19 North, Range 3 East, Washington Township, Hamilton County, Indiana

SHEET NO.
C201

PROJECT NO.
W15.0316

LOCATION: H:\2015\w150316\Engineering\design\conset\w150316-C201 site det.dwg
LAYOUT: C201
DATE/TIME: January 28, 2016 - 2:42pm
PLOTTED BY: schoeffb

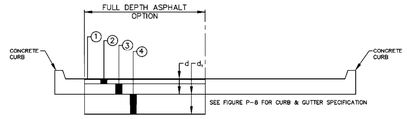

INDUSTRIAL AND ARTERIAL

	ASPHALT 1 d=10" d₁=12" d+d₁=22"	ASPHALT 2 d=10" d₁=14" d+d₁=24"
1	1.5" SURFACE 9.5 mm	1.5" SURFACE 9.5 mm
2	2.5" BINDER 19 mm	2.5" BINDER 19 mm
3	6" BINDER 19 mm	6" BINDER 19 mm
4	12" COMP. AGGR. (SIZE No. 53)	14" LIME TREATED * SUBBASE

NOTE:
* LIME MODIFICATION SHALL BE IN ACCORDANCE WITH INDOTSS 215 AND 913.

TYPICAL PAVEMENT SECTIONS

CITY OF Westfield INDIANA

NEIL B. VANTREES REGISTERED No. 10809092 STATE OF INDIANA PROFESSIONAL ENGINEER

TOWN OF WESTFIELD, INDIANA

Neil B. Vantrees 4/1/13
DATE

FIGURE P-3

STOP SIGN (R1-1)
30" x 30"

YIELD SIGN (R1-2)
30" x 30" x 30"

R1-4
18" X 6"

NO PARKING SIGN (R7-31)
12" x 18"

SPEED LIMIT SIGN (R2-1)
24" x 30"

NOTES:

1. SIGNS SHALL BE SINGLE FACED WITH HIGH INTENSITY REFLECTORIZED SHEETING ON 0.080" THICK ALUMINUM SHEET MATERIAL PER INDOT STANDARD SPECIFICATION 919.
2. POSTS SHALL BE 12'-0" LONG, 2lb/ft GALVANIZED U-CHANNEL SIGN POST INDOT STANDARD SPECIFICATION 910.14.
3. ALL SIGNS, 36" AND GREATER, SHALL BE; DOUBLE POSTED, 14'-0" LONG, 3lb/ft GALVENIZED U-CHANNEL POST, PER INDOT STANDARD SPECIFICATION 910.14.
4. ALL SIGN SIZES, SHAPES, COLORS AND MATERIAL SHALL MEET THE INDIANA MANUAL ON UNIFORM TRAFFIC CONTROL DEVICES.

REGULATORY SIGN DETAIL

CITY OF Westfield INDIANA

NEIL B. VANTREES REGISTERED No. 10809092 STATE OF INDIANA PROFESSIONAL ENGINEER

CITY OF WESTFIELD, INDIANA

Neil B. Vantrees 4/1/13
DATE

FIGURE P-15d

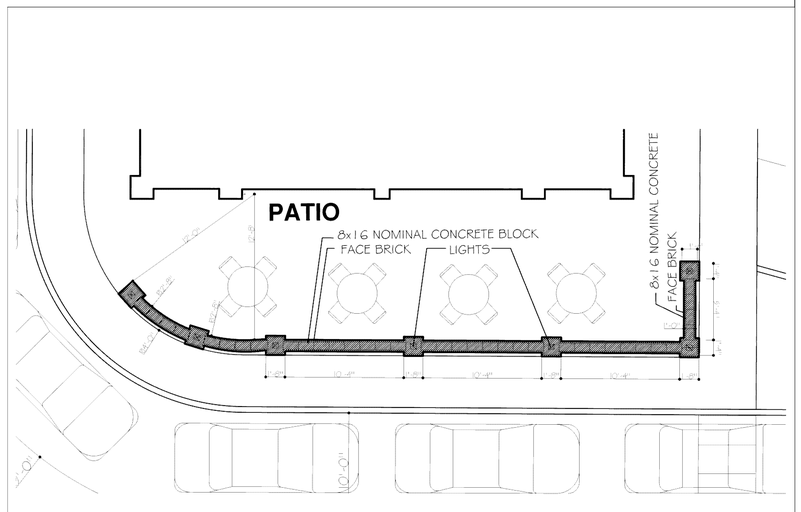

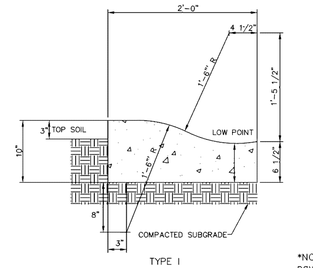

TYPE I

*NOTE – No backfilling, paving, or compaction may be done until 72 hours after the placement of the concrete.

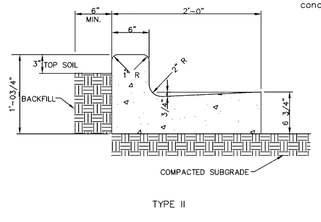

TYPE II

CONCRETE CURB AND GUTTER TYPE I & II

CITY OF Westfield INDIANA

NEIL B. VANTREES REGISTERED No. 10809092 STATE OF INDIANA PROFESSIONAL ENGINEER

CITY OF WESTFIELD, INDIANA

Neil B. Vantrees 4/1/14
DATE

FIGURE P-8

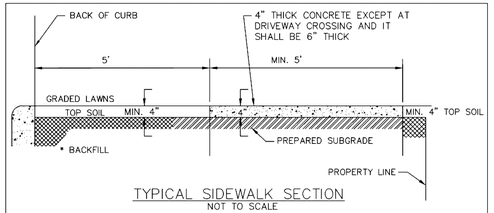

TYPICAL SIDEWALK SECTION
NOT TO SCALE

* THE SPACE BEHIND THE CURB SHALL BE FILLED WITH SUITABLE MATERIAL TO THE REQUIRED ELEVATION AND COMPACTED IN LAYERS NOT TO EXCEED 6" IN DEPTH.

SUBGRADE UNDER ALL CURBS, SIDEWALKS, AND DRIVES SHALL BE COMPACTED IN ACCORDANCE WITH I.N.D.O.T. SPECIFICATIONS.

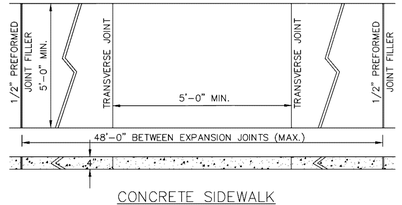

CONCRETE SIDEWALK
NOT TO SCALE

SIDEWALK DETAILS

CITY OF Westfield INDIANA

NEIL B. VANTREES REGISTERED No. 10809092 STATE OF INDIANA PROFESSIONAL ENGINEER

CITY OF WESTFIELD, INDIANA

Neil B. Vantrees 4/1/13
DATE

FIGURE P-10

Know what's below. Call before you dig.
Within Indiana Call 811 or 800-382-5544
24 Hours a Day, 7 Days a Week.
PER INDIANA STATE LAW IC 8-1-26, IT IS AGAINST THE LAW TO EXCAVATE WITHOUT NOTIFYING THE UNDERGROUND LOCATION SERVICE TWO (2) WORKING DAYS BEFORE COMMENCING WORK.

WEIHE ENGINEERS
Land Surveying | Civil Engineering
Landscape Architecture
10505 N. College Avenue
Indianapolis, Indiana 46280
weihe.net
317 | 846 - 6611
800 | 452 - 6408
317 | 843 - 0546 fax
ALLAN H. WEIHE, P.E., L.S. - FOUNDER

REVISIONS AND NOTES	DATE	BY
SUBMITTED FOR COUNTY SURVEYOR REVIEW	10.16.2015	BJS
ISSUED FOR TAC REVIEW	01.29.2016	BJS

PROJECT NO. W15.0316
DWG. NAME w15031b-C201 site det.dwg
DESIGNED BY: RJW
DRAWN BY: RJW
CHECKED BY: BJS
DATE: 01.29.2016

STEVEN SCOTT RUCKER REGISTERED PROFESSIONAL ENGINEER PE 11300279 STATE OF INDIANA
I HEREBY CERTIFY THAT I AM A DULY REGISTERED PROFESSIONAL ENGINEER IN THE STATE OF INDIANA.

STEVEN SCOTT RUCKER P.E. 11300279

PREPARED FOR: Culver's of WESTFIELD
17651 SUN PARK DRIVE, WESTFIELD, IN 46074

SITE DETAILS
Part of SW/4, Section 36, Township 19 North, Range 3 East, Washington Township, Hamilton County, Indiana

SHEET NO. C202

PROJECT NO. W15.0316

LOCATION: H:\2015\w15031b\Engineering\design\constwl\w15031b-C201 site det.dwg
LAYOUT: C202
DATE/TIME: January 28, 2016 - 2:43pm
PLOTTED BY: bdoelfs

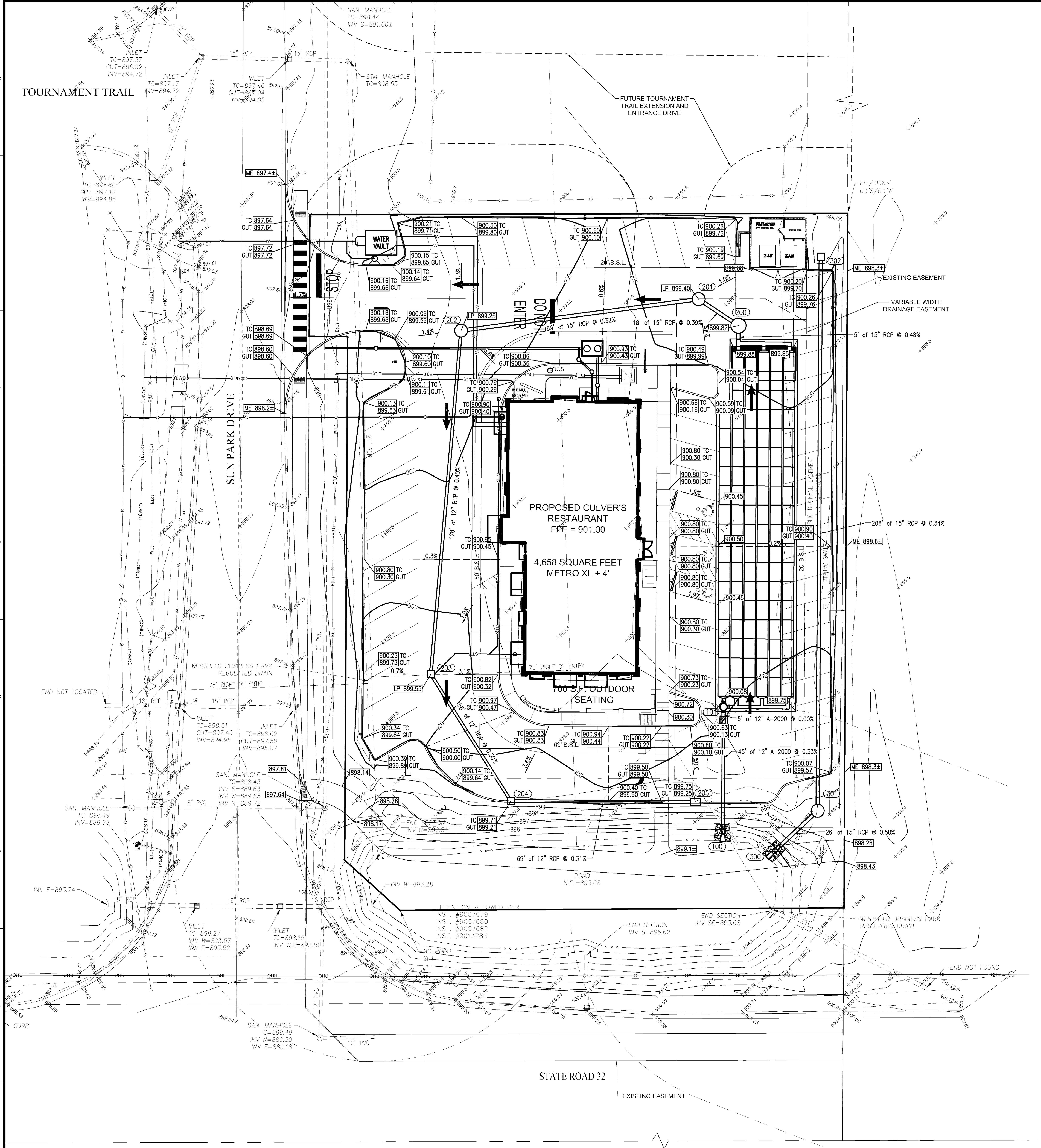

DRAINAGE DESIGN DATA

POST DEVELOPMENT RELEASE RATES
0.84 ACRES CONTROLLED DRAINAGE AREA
2YR THROUGH 10YR = 1.40 CFS
10YR, 25YR, & 100YR = 1.76 CFS

UNDERGROUND STORAGE BLOCK
10YR = 895.45
100YR = 896.70

*NOTE: MINIMUM REQUIRED GROUND SURFACE ELEVATION = 898.24 PER DEPTH REQUIREMENTS OF STORMTECH PRODUCT.

EXISTING AREAS

PERVIOUS = 1.10 AC.
IMPERVIOUS = 0.000 AC.

PROPOSED AREAS

PERVIOUS = 0.297 AC.
IMPERVIOUS = 0.813 AC.

ORIGINATING BENCHMARK

SOURCE BENCHMARK:

A STANDARD DISK STAMPED B112 1946 SET IN THE TOP OF A CONCRETE POST ALONG STATE ROAD 32 ABOUT 2.25 MILES WEST OF WASHINGTON HIGH SCHOOL AT WESTFIELD AND ABOUT 1 MILE EAST OF THE CROSS ROAD AT EAGLETOWN.
ELEVATION=924.24 (NAVD 88)

TBM:

MAG NAIL IN NORTH FACE OF POWER POLE AT THE NORTHEAST INTERSECTION OF STATE ROAD 32 AND WHEELER ROAD.
ELEVATION=900.18 (NAVD 88)

NOTE:

NO NEW MONUMENTS WERE SET DUE TO PLANNED DEVELOPMENTS IN THE VICINITY.

GENERAL GRADING NOTES

1. REFER TO THE INDIANA DEPARTMENT OF TRANSPORTATION (INDOT) STANDARD SPECIFICATIONS, 1995 EDITION, FOR BASIC MATERIALS AND CONSTRUCTION METHODS. THE SECTIONS BELOW FOR VARIOUS ITEMS ARE TO CLARIFY THE INTENT OF THE REQUIREMENTS FOR THIS PROJECT. PLEASE NOTE THAT OTHER SECTIONS OF THE INDOT STANDARD SPECIFICATIONS MAY ALSO BE APPLICABLE.
2. FILL MATERIAL SHALL CONSIST OF EARTH OBTAINED FROM CUT AREAS, BORROW PITS OR OTHER APPROVED SOURCES. EARTH SHALL BE FREE FROM ORGANIC MATTER AND OTHER DELETERIOUS SUBSTANCES AND LARGE ROCKS. THE FILL MATERIAL SHALL BE PLACED IN LAYERS NOT TO EXCEED SIX INCHES FOLLOWING COMPACTION, PROPER MOISTURE CONTENT OF FILL MATERIAL WILL BE SUCH TO ACHIEVE SPECIFIED COMPACTION DENSITY. ALL FILL BENEATH PAVED AREAS, FLOOR SLABS AND FUTURE BUILDINGS SHALL BE COMPACTED TO AT LEAST 95% OF THE MAXIMUM DRY DENSITY PER ASTM D-1557. FIELD COMPACTING TEST SHALL BE RUN ON EACH LIFT, IN FILL SECTIONS, AND THE REQUIRED COMPACTION ON EACH LIFT SHALL BE IN ACCORDANCE WITH INDOT SECTION 211.
3. MAXIMUM LAWN SLOPE IS 3:1.
4. THE CONTRACTOR SHALL CONTACT ALL UTILITY COMPANIES TO LOCATE MAINS, CONDUITS, SERVICE LINES, ETC. IN THE AFFECTED CONSTRUCTION AREA. EXISTING UTILITY STRUCTURES ARE SHOWN HERE IN ACCORDANCE WITH AVAILABLE INFORMATION. THE LOCATION AND PROTECTION OF UTILITY STRUCTURES, THEIR SUPPORT AND MAINTENANCE DURING CONSTRUCTION (IN COOPERATION WITH APPLICABLE UTILITY COMPANY) IS THE EXPRESSED RESPONSIBILITY OF THE CONTRACTOR.
5. ALL SPOT ELEVATIONS ARE TO FINISHED GRADE.
6. COMPACTED "B" BORROW BACK FILL REQ'D. OVER ALL UTILITIES IN PAVED AREAS.
7. ALL GRADES AT BOUNDARY SHALL MEET EXISTING.
8. ANY PART OF SANITARY OR STORM SEWER TRENCHES RUNNING UNDER OR WITHIN 5' OF PAVEMENT TO BE BACKFILLED WITH GRANULAR MATERIAL.
9. ALL CONSTRUCTION ON THIS SITE TO BE PERFORMED IN COMPLIANCE WITH O.S.H.A. STANDARDS FOR WORKER SAFETY.
10. THE CONTRACTOR SHALL CONFIRM ALL EARTHWORK QUANTITIES PRIOR TO THE START OF CONSTRUCTION. IF AN EXCESS OR SHORTAGE OF EARTH IS ENCOUNTERED, THE CONTRACTOR SHALL CONFIRM WITH THE OWNER AND ENGINEER THE REQUIREMENTS FOR STOCKPILING, REMOVAL OR IMPORTING OF EARTH.
11. PROVIDE POSITIVE DRAINAGE WITHOUT PONDING IN ALL AREAS AFTER INSTALLATION. CONTRACTOR TO TEST FOR AND CORRECT ANY PONDING CONDITIONS. ANY AREAS THAT HOLD WATER MORE THAN 1/8" DEEP SHALL BE CUT OUT AND CORRECTED TO POSITIVE DRAINAGE AT NO COST TO THE OWNER/ DEVELOPER/ OR ENGINEER.
12. VERTICAL CURVES, WITH A MINIMUM LENGTH OF 50', SHALL BE USED WHERE POSSIBLE BETWEEN VERTICAL CHANGES IN DIRECTION (SLOPE) TO ALLOW FOR POSITIVE DRAINAGE AND SMOOTH TRANSITIONS.
13. CONTRACTOR TO INSTALL CONCRETE CRADLES WHEN THE VERTICAL SEPARATION (AS MEASURED FROM THE EXTERIOR OF THE PIPES) BETWEEN SANITARY SEWER FACILITIES, WATER MAIN, AND STORM SEWERS IS 18" OR LESS.
14. THE SITE DOES NOT LIE IN A SPECIAL FLOOD HAZARD AREA AS ESTABLISHED BY THE FEDERAL EMERGENCY MANAGEMENT AGENCY - NATIONAL FLOOD INSURANCE PROGRAM, WHEN PLOTTED BY SCALE ON FLOOD INSURANCE RATE MAP #18057C0120 F, DATED FEBRUARY 19, 2003.
15. **SIDEWALK NOTE FOR ALL STREETS:**
THE SIDEWALK IS NOT TO EXCEED A 4% SLOPE FROM THE TOP OF CURB TO THE EDGE OF SIDEWALK ALONG ALL STREETS WITHIN THE CONSTRUCTION LIMITS. ALL SIDEWALKS ALONG DAY STREET, LAKE VILLAGE DRIVE, AND CAROUSEL LANE ARE TO COMPLY WITH WESTFIELD DETAIL G-01, WHICH SUPERCEDES ALL ELEVATIONS SHOWN WITHIN THESE CONSTRUCTION DRAWINGS. CONTRACTOR TO VERIFY ALL GRADES WITH THE WESTFIELD INSPECTOR PRIOR TO INSTALLING THE SIDEWALK.
16. NO EARTH DISTURBING ACTIVITY MAY TAKE PLACE WITHOUT AN APPROVED STORM WATER MANAGEMENT PERMIT

GENERAL NOTES

1. ALL HDPE PIPE SHALL BE DUAL WALLED, HANCOR HQ, ADS N-12 PIPE OR APPROVED EQUAL
2. ALL FITTINGS AND ACCESSORIES INCLUDING BUT NOT LIMITED TO END CAPS, CLEANOUTS, REDUCERS, ETC., SHALL BE OF HDPE MATERIAL COMPARABLE WITH STORAGE PIPES
3. PROVIDE BACKFILL WITH A MINIMUM OF 4" BEDDING MATERIAL OF #8 AGGREGATE COMPACTED IN 8" LIFTS TO 95% MAXIMUM DRY DENSITY
4. VERIFY EXISTING STORM INVERT ELEVATIONS PRIOR TO STARTING NEW STORM SEWER CONNECTION
5. THE SITE DOES NOT LIE IN A SPECIAL FLOOD HAZARD AREA AS ESTABLISHED BY THE FEDERAL EMERGENCY MANAGEMENT AGENCY - NATIONAL FLOOD INSURANCE PROGRAM, WHEN PLOTTED BY SCALE ON FLOOD INSURANCE RATE MAP #18057C0120 G, DATED NOVEMBER 19, 2014.

GRADING PLAN LEGEND

UTILITIES

- FIRE DEPT HOOKUP
- FIRE HYDRANT
- POST INDICATOR VALVE
- CHILLED WATER MANHOLE
- WATER MANHOLE
- WATER METER
- WATER VALVE
- GAS METER
- GAS VALVE
- ELECTRIC MANHOLE
- ELECTRIC OUTLET
- ELECTRIC METER
- ELECTRICAL RISER
- TRANSFORMER
- GUY ANCHOR
- ELECTRIC JUNCTION BOX
- UTILITY POLE
- UTILITY POLE W/ TRANSFORMER
- PARKING LOT LIGHT (1 HEAD)
- PARKING LOT LIGHT (2 HEAD)
- COMMUNICATIONS JUNCTION BOX
- COMMUNICATIONS MANHOLE
- COMMUNICATIONS PEDESTAL
- COMMUNICATIONS RISER
- TRAFFIC SIGNAL POLE
- TRAFFIC SIGNAL
- STORM CLEANOUT
- BEEHIVE INLET
- CURB INLET
- FLOOR DRAIN
- ROUND INLET
- SQUARE INLET
- STORM MANHOLE
- DOWN SPOUT
- SANITARY SEWER CLEANOUT
- SANITARY SEWER MANHOLE
- SANITARY STUB MARKER

OTHER

- SIGN
- BOLLARD
- PARKING WHEEL STOP
- HANDICAPPED SPACE
- CURB & GUTTER ELEVATION
- SPOT ELEVATION
- SPOT ELEVATION
- SPOT ELEVATION
- EMERGENCY FLOOD ROUTE

LINE TYPES

- RIGHT OF WAY LINE
- FENCE
- GUARD RAIL
- BOUNDARY LINE
- FLOW LINE
- INDEX CONTOUR
- INTERMEDIATE CONTOUR
- UNDERGROUND GAS
- UNDERGROUND WATER
- AERIAL ELECTRIC
- UNDERGROUND ELECTRIC
- UNDERGROUND COMMUNICATIONS
- AERIAL COMMUNICATIONS
- UNDERGROUND FIBER OPTIC
- OVERHEAD UTILITY
- FORCE MAIN
- SANITARY SEWER
- STORM SEWER

SCALE: 1" = 20'
0 10 20 40

Know what's **below.** **Call** before you dig.
Within Indiana Call
811 or 800-382-5544
24 Hours a Day, 7 Days a Week.
PER INDIANA STATE LAW IC 8-1-26. IT IS AGAINST THE LAW TO EXCAVATE WITHOUT NOTIFYING THE UNDERGROUND LOCATION SERVICE TWO (2) WORKING DAYS BEFORE COMMENCING WORK.

10505 N. College Avenue
Indianapolis, Indiana 46280
weihe.net
317 | 846 - 6611
800 | 452 - 6408
317 | 843 - 0546 *fax*
ALLAN H. WEIHE, P.E., L.S. - FOUNDER
WEIHE ENGINEERS
Land Surveying | Civil Engineering
Landscape Architecture

PROJECT NO.: W15.0316
DWG NAME: w150316-C300 grad.dwg
DESIGNED BY: RLW
DRAWN BY: RLW
CHECKED BY: BJS
DATE: 01.29.2016

REVISIONS AND ISSUES	DATE	BY
SUBMITTED FOR COUNTY SURVEYOR REVIEW	10.16.2015	BJS
ISSUED FOR TAC REVIEW	01.29.2016	BJS

STEVEN SCOTT RUCKER REGISTERED PE11300279 STATE OF INDIANA PROFESSIONAL ENGINEER
APPROVAL PENDING NOT FOR CONSTRUCTION
STEVEN SCOTT RUCKER P.E. 11300279

PREPARED FOR: Culver's of WESTFIELD
17651 SUN PARK DRIVE, WESTFIELD, IN 46074

GRADING PLAN
Part of SW/4, Section 36, Township 19 North, Range 3 East, Washington Township, Hamilton County, Indiana

SHEET NO. C300
PROJECT NO. W15.0316

LOCATION: H:\2015\w150316\Engineering\design\conset\w150316-C300 grad.dwg
LAYOUT: C300
DATE/TIME: January 28, 2016 - 2:43pm
PLOTTED BY: schoeffb

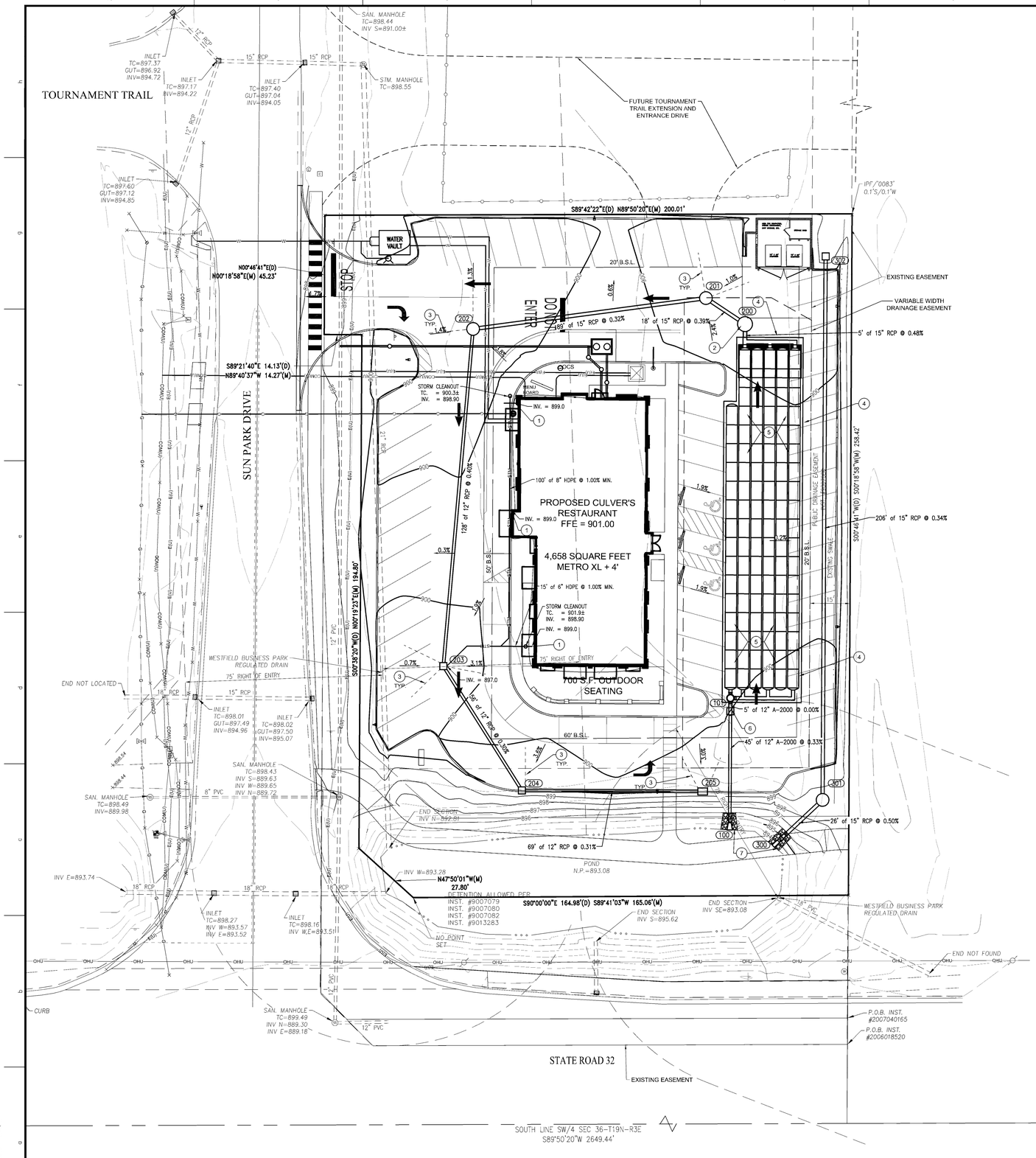

DRAINAGE PLAN NOTES

1. APPROXIMATE DOWN SPOUT LOCATION SEE ARCHITECTURAL PLANS FOR FINAL LOCATION TYP.INV.= 899.0 ±. CONNECT ROOF DRAIN DOWNSPOUT WITH 6" HDPE TO 8" SUBSURFACE HDPE DRAIN AND ROUTE TO STORM SEWER STRUCTURE.
2. INSTALL 6' DIAMETER FIRST DEFENSE WATER QUALITY UNIT (OR APPROVED EQUAL)***. SEE C604 FOR DETAILS.
3. INSTALL 15 FEET OF 4" HDPE PERFORATED UNDERDRAINS.
4. INSTALL 6" PERIMETER TILE AND CONNECT TO THE CONTROL STRUCTURE.
5. INSTALL SC-740 STORM CHAMBERS***. SEE DETAILS ON SHEET C603 AND C604.

   CHAMBER MANIFOLD INVERT (ELEVATIONS VARY. SEE DETAIL ON SHEET C603) = 893.85
   BOTTOM OF STONE = 893.15
   CHAMBER INVERT = 893.65
6. CONTROL STRUCTURE. SEE DETAIL ON SHEET C602.
7. RIPRAP PAD ON GEOTEXTILE FABRIC.

***SUBSTITUTION DESIGN AND APPROVAL COSTS SHALL BE BORNE BY THE CONTRACTOR.

GRADING PLAN LEGEND

UTILITIES

- FIRE HYDRANT
- CHILLED WATER MANHOLE
- WATER MANHOLE
- WATER METER
- WATER VALVE
- GAS METER
- GAS VALVE
- ELECTRIC MANHOLE
- ELECTRIC OUTLET
- ELECTRIC METER
- ELECTRICAL RISER
- TRANSFORMER
- GUY ANCHOR
- ELECTRIC JUNCTION BOX
- UTILITY POLE
- UTILITY POLE W/ TRANSFORMER
- PARKING LOT LIGHT (1 HEAD)
- PARKING LOT LIGHT (2 HEAD)
- COMMUNICATIONS JUNCTION BOX
- COMMUNICATIONS MANHOLE
- COMMUNICATIONS PEDESTAL
- COMMUNICATIONS RISER
- TRAFFIC SIGNAL POLE
- TRAFFIC SIGNAL
- STORM CLEANOUT
- BEEHIVE INLET
- CURB INLET
- FLOOR DRAIN
- ROUND INLET
- SQUARE INLET
- STORM MANHOLE
- DOWN SPOUT
- SANITARY SEWER CLEANOUT
- SANITARY SEWER MANHOLE
- DISTRIBUTION BOX

LINE TYPES

- RIGHT OF WAY LINE
- FENCE
- BOUNDARY LINE
- FLOW LINE
- 500 INDEX CONTOUR
- 501 INTERMEDIATE CONTOUR
- UNDERGROUND GAS
- UNDERGROUND WATER
- AERIAL ELECTRIC
- UNDERGROUND ELECTRIC
- UNDERGROUND COMMUNICATIONS
- AERIAL COMMUNICATIONS
- UNDERGROUND FIBER OPTIC
- OVERHEAD UTILITY
- FORCE MAIN
- SANITARY SEWER
- STORM SEWER

OTHER

- SIGN
- BOLLARD
- PARKING WHEEL STOP
- HANDICAPPED SPACE
- CURB & GUTTER ELEVATION
- SPOT ELEVATION
- SPOT ELEVATION
- SPOT ELEVATION
- EMERGENCY FLOOD ROUTE

N

W E

S

SCALE: 1" = 20'

0 10 20 40

Know what's **below.** **Call** before you dig.
Within Indiana Call 811 or 800-382-5544
24 Hours a Day, 7 Days a Week.
PER INDIANA STATE LAW IC 8-1-26, IT IS AGAINST THE LAW TO EXCAVATE WITHOUT NOTIFYING THE UNDERGROUND LOCATION SERVICE TWO (2) WORKING DAYS BEFORE COMMENCING WORK.

WEIHE ENGINEERS
Land Surveying | Civil Engineering
Landscape Architecture
10505 N. College Avenue
Indianapolis, Indiana 46280
weihe.net
317 | 846 - 6611
800 | 452 - 6408
317 | 843 - 0546 *fax*
ALLAN H. WEIHE, P.E., L.S. - FOUNDER

REVISIONS AND ISSUES	DATE	BY
SUBMITTED FOR COUNTY SURVEYOR REVIEW	12.15.2015	BJS
ISSUED FOR TAC REVIEW	01.29.2016	BJS

PROJECT NO.: W15.0316
DWG NAME: w15016-C600 drain.dwg
DESIGNED BY: RLW
DRAWN BY: RLW
CHECKED BY: BJS
DATE: 01.29.2016

STEVEN SCOTT RUCKER P.E. 11300279

PREPARED FOR: Culver's

of WESTFIELD
17651 SUN PARK DRIVE, WESTFIELD, IN 46074

DRAINAGE PLAN

Part of SW/4, Section 36, Township 19 North, Range 3 East, Washington Township, Hamilton County, Indiana

SHEET NO.
C600

PROJECT NO.
W15.0316

LOCATION: I:\Projects\2015\w15016\Engineering\Design\Layouts\w15016 - C600 drain.dwg
LAYOUT: C600
DATE/TIME: January 28, 2016 - 2:43pm
PLOTTED BY: schaefe

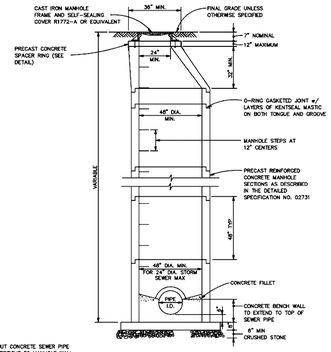

NOTE:
1. GROUT CONCRETE SEWER PIPE WATERTIGHT TO MANHOLE WALL.
2. INSTALL BUTYL RUBBER WATERSTOP FOR PIPE OTHER THAN CONCRETE SEWER PIPE.
3. SEE TYPE 1 STORM SEWER MANHOLE DETAIL FOR SEWERS LARGER THAN 24"

STANDARD STORM MANHOLE DETAIL

CITY OF WESTFIELD, INDIANA

11/7/13 DATE

FIGURE ST-1

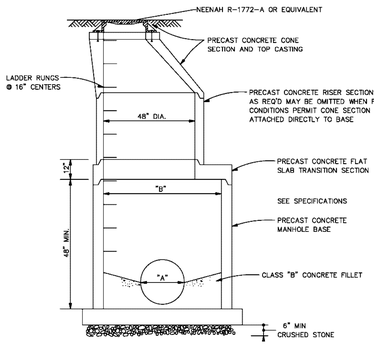

TYPE 1 MANHOLE STRUCTURE DATA		
PIPE DIA. "A"	INTERSECTING ANGLE	PIPE DIA. "B"
30"	0° TO 44°	30"
30"	44° TO 90°	30"
36"	0° TO 44°	36"
36"	44° TO 90°	36"

NOTES:
1. SEE STANDARD STORM SEWER MANHOLE DETAIL FOR OTHER DETAIL & DIMENSIONS
2. RISER & CONE SECTIONS SHALL BE AS SHOWN ON STANDARD STORM SEWER MANHOLE DETAIL

TYPE 1 STORM SEWER MANHOLE DETAIL

CITY OF WESTFIELD, INDIANA

4/1/13 DATE

FIGURE ST-2

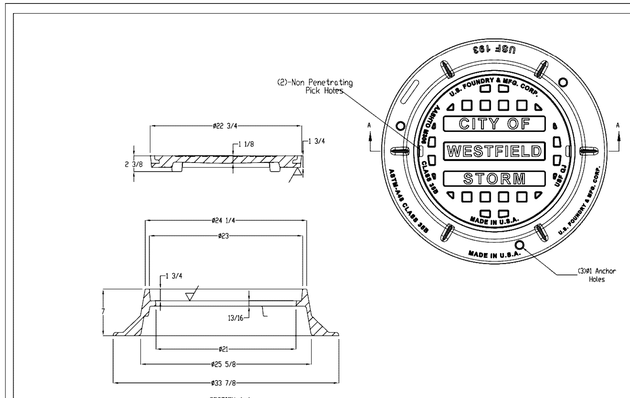

MANHOLE SOLID LID CASTING

CITY OF WESTFIELD, INDIANA

PHILLIP A. SUNDING REGISTERED No. PE11300022 STATE OF INDIANA PROFESSIONAL ENGINEER

1/22/15 DATE

FIGURE ST-7

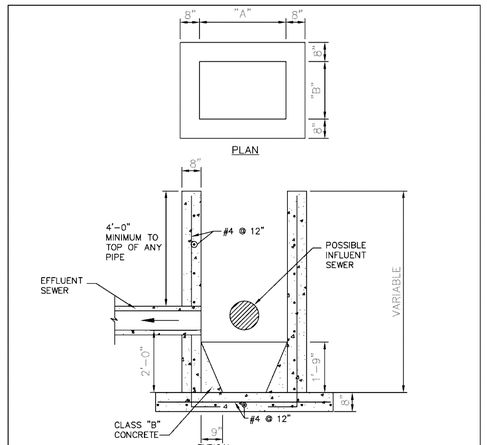

NOTE:
1. DIMENSION "A" SHALL BE 36" (0.91m) AND DIMENSION "B" SHALL BE 24" (0.61m) UNLESS OTHERWISE NOTED ON THE DRAWINGS.
2. PRECAST CATCH BASINS SHALL BE CONSIDERED AN ACCEPTABLE ALTERNATE IF APPROVED BY THE WESTFIELD PUBLC WORKS DEPARTMENT

TYPE "CA" CATCH BASIN DETAIL

CITY OF WESTFIELD, INDIANA

4/1/13 DATE

FIGURE ST-13

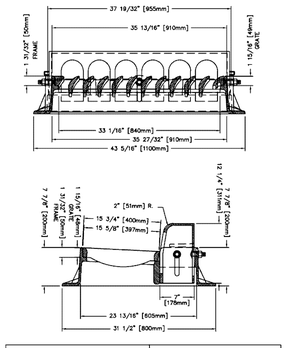

NEENAH	R-3287-10V
EAST JORDAN	7505 M1 & T2

* OR APROVED BY WESTFIELD PUBLIC WORKS DEPARTMENT
** STORM SEWER CASTINGS MANHOLE COVERS, BEEHIVE INLETS, CURB INLETS OR OTHER APPROVED CASTING SHALL HAVE THE FOLLOWING PHRASES CAST IN RECESSED LETTERS TWO (2) INCHES IN HEIGHT:
A. "STORM SEWER"
B. "DRAINS TO RIVER" OR "DRAINS TO WATERWAY"
C. "DUMP NO WASTE"
D. OTHER PHRASES SHALL REQUIRE APPROVAL OF THE WESTFIELD PUBLIC WORKS DEPARTMENT.

CHAIR BACK CURB INLET CASTING

CITY OF WESTFIELD, INDIANA

4/1/13 DATE

FIGURE ST-8

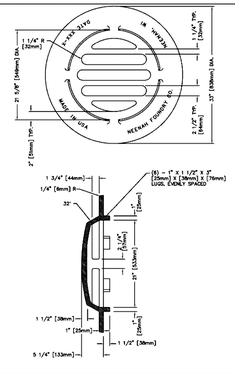

NEENAH	R-4342
EAST JORDAN	6489

* OR APROVED BY WESTFIELD PUBLIC WORKS DEPARTMENT
** STORM SEWER CASTINGS MANHOLE COVERS, BEEHIVE INLETS, CURB INLETS OR OTHER APPROVED CASTING SHALL HAVE THE FOLLOWING PHRASES CAST IN RECESSED LETTERS TWO (2) INCHES IN HEIGHT:
A. "STORM SEWER"
B. "DRAINS TO RIVER" OR "DRAINS TO WATERWAY"
C. "DUMP NO WASTE"
D. OTHER PHRASES SHALL REQUIRE APPROVAL OF THE WESTFIELD PUBLIC WORKS DEPARTMENT.

BEEHIVE CURB INLET CASTING

CITY OF WESTFIELD, INDIANA

4/1/13 DATE

FIGURE ST-10

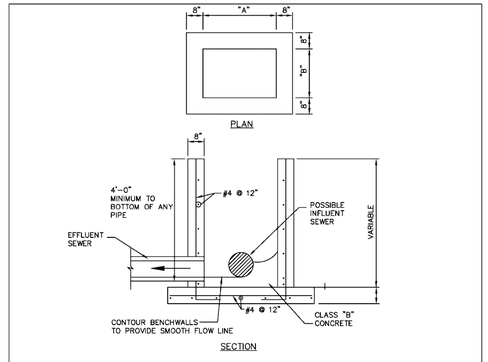

CAST	"A"	"B"
TYPE 1	36"(0.91m)	24"(0.61m)
TYPE 2	24"(0.61m)	22"(0.56m)
TYPE 3	22"(0.56m)	20"(0.51m)

NOTE:
1. THESE DIMENSIONS ARE ALSO APPLICABLE TO TYPE "CA" CATCH BASINS. (See figure ST-13)
2. PRECAST INLETS AND CATCH BASINS SHALL BE CONSIDERED AN ACCEPTABLE ALTERNATE IF APPROVED BY THE WESTFIELD PUBLIC WORKS DEPARTMENT

INLET STRUCTURE TYPE 1A

CITY OF WESTFIELD, INDIANA

4/1/14 DATE

FIGURE ST-11

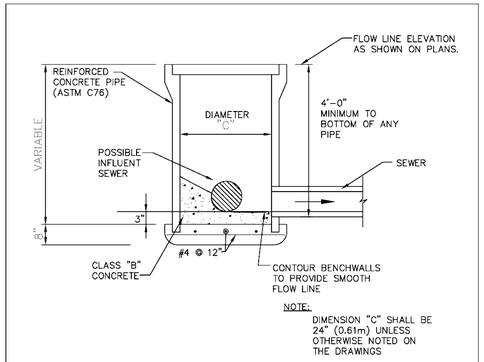

NOTE:
DIMENSION "C" SHALL BE 24" (0.61m) UNLESS OTHERWISE NOTED ON THE DRAWINGS

SECTION

CAST	"A"	"B"
TYPE 1	36" (0.91m)	24" (0.61m)
TYPE 2	24" (0.61m)	22" (0.56m)
TYPE 3	22" (0.56m)	20" (0.51m)

NOTES:
1. THESE DIMENSIONS ARE ALSO APPLICABLE TO TYPE CA CATCH BASINS.
2. PRECAST INLETS AND CATCH BASINS SHALL BE CONSIDERED AN ACCEPTABLE ALTERNATE IF APPROVED BY THE WESTFIELD PUBLIC WORKS DEPARTMENT.

INLET STRUCTURE TYPE 1

CITY OF WESTFIELD, INDIANA

4/1/13 DATE

FIGURE ST-12

WEIHE ENGINEERS
Land Surveying | Civil Engineering
Landscape Architecture
10505 N. College Avenue
Indianapolis, Indiana 46280
weihe.net
317 | 846 - 6611
800 | 452 - 6408
317 | 843 - 0546 fax
ALLAN H. WEIHE, P.E., L.S. - FOUNDER

REVISIONS, NOTES, ETC.	DATE	BY:
SUBMITTED FOR COUNTY SURVEYOR REVIEW	10.15.2015	BJS
ISSUED FOR TAC REVIEW	01.29.2016	BJS

PROJECT NO: W15.0316
DWG NAME: w15316 C602 drainage det.dwg
DESIGNED BY: RJW
DRAWN BY: RJW
CHECKED BY: BJS
DATE: 01.29.2016

STEVEN SCOTT RUCKER P.E. 11300279

PREPARED FOR: Cabot's

of WESTFIELD
17651 SUN PARK DRIVE, WESTFIELD, IN 46074

DRAINAGE DETAILS

Part of SW/4 Section 36, Township 19 North, Range 3 East, Washington Township, Hamilton County, Indiana

SHEET NO.
C601

PROJECT NO.
W15.0316

Know what's below. Call before you dig.
Within Indiana Call 811 or 800-382-5544
24 Hours a Day, 7 Days a Week.
PER INDIANA STATE LAW IC 8-1-26, IT IS AGAINST THE LAW TO EXCAVATE WITHOUT NOTIFYING THE UNDERGROUND LOCATION SERVICE TWO (2) WORKING DAYS BEFORE COMMENCING WORK.

LOCATION: I:\Projects\2015\w15316\Engineering\Design\Current\w15316 - C602 drainage det.dwg
LAST SAVED BY: schaefer
DATE/TIME: January 28, 2016 - 2:43pm
PLOTTED BY: schaefer

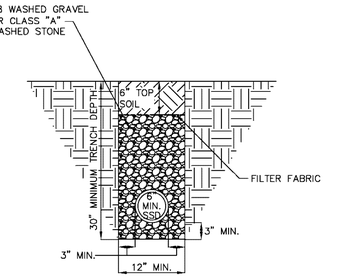

NOTE:
TILE SHALL BE DOUBLE WALL, SMOOTH WALL PERFORATED HDPE PIPE.

SUBSURFACE DRAIN (SSD) DETAIL NO SWALE

CITY OF WESTFIELD, INDIANA

NEIL B. VANTREES REGISTERED No. 10809092 STATE OF INDIANA PROFESSIONAL ENGINEER

4/1/13
DATE

FIGURE ST-40

PIPE SIZE (INCHES)	STRUCTURES LESS THAN 48" FROM T/C TO INVERT (INCHES)	STRUCTURES GREATER THAN 48" FROM T/C TO INVERT	ANGLE AND QUALITY OF PIPES WILL REQUIRE SPECIAL DESIGN	STEPS REQUIRED	CURB CASTING #5-3501N OR 7490	CASTING #3501 TL & TR OR 7495
12 TO 18	24 X 24	***	DESIGN APPROVAL	NO	YES	YES
12 TO 21	30 X 30	***	DESIGN APPROVAL	NO	YES	YES
18 TO 21		MH	DESIGN APPROVAL	YES	YES	YES
21 TO 27	24 X 36* OR 36 X 36	***	DESIGN APPROVAL	NO	NO	YES
12 TO 24	36 X 36	***	DESIGN APPROVAL	NO	YES	YES
24 OR LARGER	DESIGN APPROVAL	***	DESIGN APPROVAL	NO	NO	YES
24 OR LARGER		MH	DESIGN APPROVAL	YES**	YES	YES

* PIPES NO LARGER THAN 18" CAN BE USED IN THE 2' SIDE OF THIS BOX.

**INCOMING AND OUT GOING PIPES EFFECT STEPS IN THIS STRUCTURE.

***SPECIAL NOTE: STRUCTURES DEEPER THAN 48" FROM T/C TO INVERT WILL BE A M.H. WITH STEPS UNLESS SPECIAL DESIGN IS APPROVED

SPECIAL NOTE: STRUCTURES WILL BE DESIGNED FOR MAXIMUM FLOW IN PIPES.

SPECIAL NOTE: THE CITY MAY REQUIRE STEPS TO BE INSTALLED AFTER STRUCTURE IS SET, TO IMPROVE ACCESS.

STORM STRUCTURE SIZING TABLE

CITY OF WESTFIELD, INDIANA

NEIL B. VANTREES REGISTERED No. 10809092 STATE OF INDIANA PROFESSIONAL ENGINEER

4/1/13
DATE

FIGURE ST-15

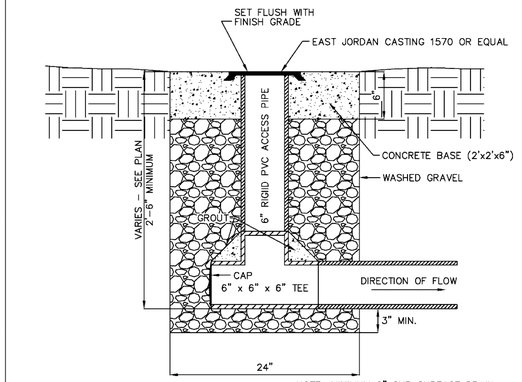

NOTE: MINIMUM 6" SUB SURFACE DRAIN D= PIPE DIAMETER

NOTE: TILE SHALL BE DOUBLE WALL SMOOTH WALL PERFORATED HDPE PIPE.

SUBSURFACE DRAIN (SSD) RISER DETAIL

CITY OF WESTFIELD, INDIANA

NEIL B. VANTREES REGISTERED No. 10809092 STATE OF INDIANA PROFESSIONAL ENGINEER

4/1/13
DATE

FIGURE ST-37

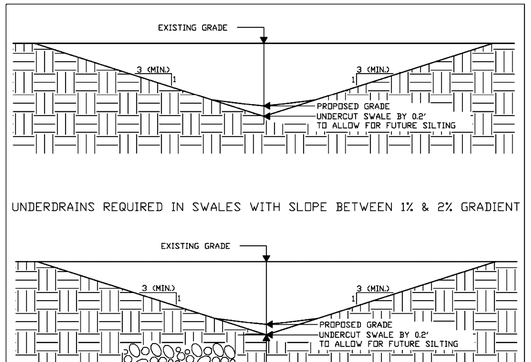

UNDERDRAINS REQUIRED IN SWALES WITH SLOPE BETWEEN 1% & 2% GRADIENT

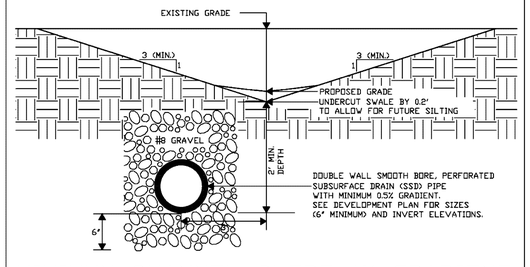

MINIMUM CHANNEL SLOPE 1% GRADIENT

TYPICAL SWALE DETAIL

CITY OF WESTFIELD, INDIANA

NEIL B. VANTREES REGISTERED No. 10809092 STATE OF INDIANA PROFESSIONAL ENGINEER

4/1/13
DATE

FIGURE ST-43

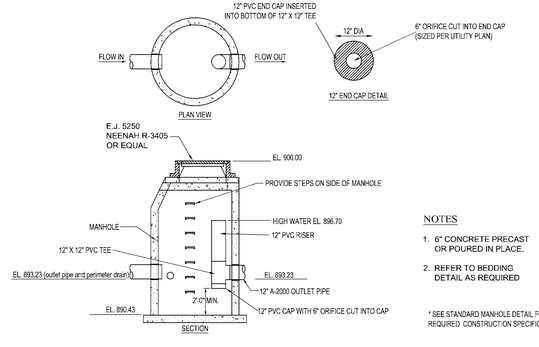

NOTES

1. 6" CONCRETE PRECAST OR POURED IN PLACE.
2. REFER TO BEDDING DETAIL AS REQUIRED

* SEE STANDARD MANHOLE DETAIL FOR REQUIRED CONSTRUCTION SPECIFICATIONS

OUTLET CONTROL STRUCTURE #101

NO SCALE

Know what's **below.** **Call** before you dig.
Within Indiana Call 811 or 800-382-5544
24 Hours a Day, 7 Days a Week.
PER INDIANA STATE LAW IC 8-1-26, IT IS AGAINST THE LAW TO EXCAVATE WITHOUT NOTIFYING THE UNDERGROUND LOCATION SERVICE TWO (2) WORKING DAYS BEFORE COMMENCING WORK.

10505 N. College Avenue
Indianapolis, Indiana 46280
weihe.net

317 | 846 - 6611
800 | 452 - 6408
317 | 843 - 0546 fax

ALLAN H. WEIHE, P.E., L.S. - FOUNDER

WEIHE ENGINEERS
Land Surveying | Civil Engineering
Landscape Architecture

REVISIONS AND NOTES	DATE	BY
SUBMITTED FOR COUNTY SURVEYOR REVIEW	12.15.2015	BJS
ISSUED FOR TAC REVIEW	01.29.2016	BJS

PROJECT NO.: W15.0316
DWG NAME: w15316-C602 drainage det.dwg
DESIGNED BY: RJW
DRAWN BY: RJW
CHECKED BY: BJS
DATE: 01.29.2016

STEVEN SCOTT RUCKER PE 11300279 STATE OF INDIANA PROFESSIONAL ENGINEER

STEVEN SCOTT RUCKER P.E. 11300279

PREPARED FOR: of WESTFIELD

17651 SUN PARK DRIVE, WESTFIELD, IN 46074

DRAINAGE DETAILS

Part of SW/4 Section 36, Township 19 North, Range 3 East, Washington Township, Hamilton County, Indiana

SHEET NO.
C602

PROJECT NO.
W15.0316

LOCATION: H:\2015\w15316\Engineering\Design\Consel\w15316-C602 drainage det.dwg
LAST MODIFIED: January 29, 2016 – 2:44pm
DATE/TIME: January 29, 2016 – 2:44pm
PLOTTED BY: schoelb

PROJECT INFORMATION	
ENGINEERED PRODUCT MANAGER:	JOE ROGERS 317-417-0385 JOE.ROGERS@ADS-PIPE.COM
ADS SALES REP:	JOHN ADAMS 317-506-1838 JOHN.ADAMS2@ADS-PIPE.COM
PROJECT NO:	118284

ADVANCED DRAINAGE SYSTEMS, INC.

CULVER,S

WESTFIELD, IN

STORMWATER CHAMBER SPECIFICATIONS

1. CHAMBERS SHALL BE STORMTECH SC-740, SC-310, OR APPROVED EQUAL.
2. CHAMBERS SHALL BE MANUFACTURED FROM VIRGIN POLYPROPYLENE OR POLYETHYLENE RESINS.
3. CHAMBER ROWS SHALL PROVIDE CONTINUOUS, UNOBSTRUCTED INTERNAL SPACE WITH NO INTERNAL SUPPORT PANELS THAT WOULD IMPEDE FLOW OR LIMIT ACCESS FOR INSPECTION.
4. THE STRUCTURAL DESIGN OF THE CHAMBERS, THE STRUCTURAL BACKFILL, AND THE INSTALLATION REQUIREMENTS SHALL ENSURE THAT THE LOAD FACTORS SPECIFIED IN THE AASHTO LRFD BRIDGE DESIGN SPECIFICATIONS, SECTION 12.12, ARE MET FOR: 1) LONG-DURATION DEAD LOADS AND 2) SHORT-DURATION LIVE LOADS, BASED ON THE AASHTO DESIGN TRUCK WITH CONSIDERATION FOR IMPACT AND MULTIPLE VEHICLE PRESENCES.
5. CHAMBERS SHALL MEET ASTM F2922 (POLYETHYLENE) OR ASTM F2418 (POLYPROPYLENE), "STANDARD SPECIFICATION FOR THERMOPLASTIC CORRUGATED WALL STORMWATER COLLECTION CHAMBERS".
6. CHAMBERS SHALL BE DESIGNED AND ALLOWABLE LOADS DETERMINED IN ACCORDANCE WITH ASTM F2787, "STANDARD PRACTICE FOR STRUCTURAL DESIGN OF THERMOPLASTIC CORRUGATED WALL STORMWATER COLLECTION CHAMBERS".
7. ONLY CHAMBERS THAT ARE APPROVED BY THE SITE DESIGN ENGINEER WILL BE ALLOWED. THE CHAMBER MANUFACTURER SHALL SUBMIT THE FOLLOWING UPON REQUEST TO THE SITE DESIGN ENGINEER FOR APPROVAL BEFORE DELIVERING CHAMBERS TO THE PROJECT SITE:
   a. A STRUCTURAL EVALUATION SEALED BY A REGISTERED PROFESSIONAL ENGINEER THAT DEMONSTRATES THAT THE SAFETY FACTORS ARE GREATER THAN OR EQUAL TO 1.95 FOR DEAD LOAD AND 1.75 FOR LIVE LOAD, THE MINIMUM REQUIRED BY ASTM F2787 AND BY AASHTO FOR THERMOPLASTIC PIPE.
   b. A STRUCTURAL EVALUATION SEALED BY A REGISTERED PROFESSIONAL ENGINEER THAT DEMONSTRATES THAT THE LOAD FACTORS SPECIFIED IN THE AASHTO LRFD BRIDGE DESIGN SPECIFICATIONS, SECTION 12.12, ARE MET. THE 50 YEAR CREEP MODULUS DATA SPECIFIED IN ASTM F2418 OR ASTM F2922 MUST BE USED AS PART OF THE AASHTO STRUCTURAL EVALUATION TO VERIFY LONG-TERM PERFORMANCE.
   c. STRUCTURAL CROSS SECTION DETAIL ON WHICH THE STRUCTURAL EVALUATION IS BASED.
8. CHAMBERS AND END CAPS SHALL BE PRODUCED AT AN ISO 9001 CERTIFIED MANUFACTURING FACILITY.

IMPORTANT - NOTES FOR THE BIDDING AND INSTALLATION OF THE SC-310/SC-740 SYSTEM

1. STORMTECH SC-310 & SC-740 CHAMBERS SHALL NOT BE INSTALLED UNTIL THE MANUFACTURER'S REPRESENTATIVE HAS COMPLETED A PRE-CONSTRUCTION MEETING WITH THE INSTALLERS.
2. STORMTECH SC-310 & SC-740 CHAMBERS SHALL BE INSTALLED IN ACCORDANCE WITH THE "STORMTECH SC-310/SC-740/SC-780 CONSTRUCTION GUIDE".
3. CHAMBERS ARE NOT TO BE BACKFILLED WITH A DOZER OR AN EXCAVATOR SITUATED OVER THE CHAMBERS. STORMTECH RECOMMENDS 3 BACKFILL METHODS:
   - STONESHOOTER LOCATED OFF THE CHAMBER BED.
   - BACKFILL AS ROWS ARE BUILT USING AN EXCAVATOR ON THE FOUNDATION STONE OR SUBGRADE.
   - BACKFILL FROM OUTSIDE THE EXCAVATION USING A LONG BOOM HOE OR EXCAVATOR.
4. THE FOUNDATION STONE SHALL BE LEVELED AND COMPACTED PRIOR TO PLACING CHAMBERS.
5. JOINTS BETWEEN CHAMBERS SHALL BE PROPERLY SEATED PRIOR TO PLACING STONE.
6. MAINTAIN MINIMUM - 6" (150 mm) SPACING BETWEEN THE CHAMBER ROWS.
7. EMBEDMENT STONE SURROUNDING CHAMBERS MUST BE A CLEAN, CRUSHED, ANGULAR STONE 3/4-2" (20-50 mm).
8. THE CONTRACTOR MUST REPORT ANY DISCREPANCIES WITH CHAMBER FOUNDATION MATERIALS BEARING CAPACITIES TO THE SITE DESIGN ENGINEER.
9. ADS RECOMMENDS THE USE OF "FLEXSTORM CATCH IT" INSERTS DURING CONSTRUCTION FOR ALL INLETS TO PROTECT THE SUBSURFACE STORMWATER MANAGEMENT SYSTEM FROM CONSTRUCTION SITE RUNOFF.

NOTES FOR CONSTRUCTION EQUIPMENT

1. STORMTECH SC-310 & SC-740 CHAMBERS SHALL BE INSTALLED IN ACCORDANCE WITH THE "STORMTECH SC-310/SC-740/DC-780 CONSTRUCTION GUIDE".
2. THE USE OF CONSTRUCTION EQUIPMENT OVER SC-310 & SC-740 CHAMBERS IS LIMITED:
   - NO EQUIPMENT IS ALLOWED ON BARE CHAMBERS.
   - NO RUBBER TIRED LOADERS, DUMP TRUCKS, OR EXCAVATORS ARE ALLOWED UNTIL PROPER FILL DEPTHS ARE REACHED IN ACCORDANCE WITH THE "STORMTECH SC-310/SC-740/DC-780 CONSTRUCTION GUIDE".
   - WEIGHT LIMITS FOR CONSTRUCTION EQUIPMENT CAN BE FOUND IN THE "STORMTECH SC-310/SC-740/DC-780 CONSTRUCTION GUIDE".
3. FULL 36" (900 mm) OF STABILIZED COVER MATERIALS OVER THE CHAMBERS IS REQUIRED FOR DUMP TRUCK TRAVEL OR DUMPING.

USE OF A DOZER TO PUSH EMBEDMENT STONE BETWEEN THE ROWS OF CHAMBERS MAY CAUSE DAMAGE TO THE CHAMBERS AND IS NOT AN ACCEPTABLE BACKFILL METHOD. ANY CHAMBERS DAMAGED BY THE "DUMP AND PUSH" METHOD ARE NOT COVERED UNDER THE STORMTECH STANDARD WARRANTY.

CONTACT STORMTECH AT 1-888-892-2694 WITH ANY QUESTIONS ON INSTALLATION REQUIREMENTS OR WEIGHT LIMITS FOR CONSTRUCTION EQUIPMENT.

©2013 ADS, INC

PROPOSED LAYOUT

(105) STORMTECH SC-740 CHAMBERS
(12) STORMTECH SC-740 END CAPS
INSTALLED WITH 6" COVER STONE, 6" BASE STONE, 40% STONE VOID
INSTALLED SYSTEM VOLUME: 8,549 CF (PERIMETER STONE INCLUDED)
AREA OF SYSTEM: 4,039 FT²
PERIMETER OF SYSTEM: 337 FT

PROPOSED ELEVATIONS

MAXIMUM ALLOWABLE GRADE (TOP OF PAVEMENT/UNPAVED):	904.25
MINIMUM ALLOWABLE GRADE (UNPAVED WITH TRAFFIC):	898.25
MINIMUM ALLOWABLE GRADE (UNPAVED NO TRAFFIC):	897.75
MINIMUM ALLOWABLE GRADE (BASE OF FLEXIBLE PAVEMENT):	897.75
MINIMUM ALLOWABLE GRADE (TOP OF RIGID CONCRETE PAVEMENT):	897.75
TOP OF STONE:	896.75
TOP OF CHAMBER:	896.25
15" BOTTOM MANIFOLD INVERT:	893.86
12" BOTTOM MANIFOLD INVERT:	893.85
BOTTOM OF CHAMBER:	893.75
BOTTOM OF STONE:	893.25

NOTES

- MANIFOLD SIZE TO BE DETERMINED BY SITE DESIGN ENGINEER. SEE TECH SHEET #7 FOR MANIFOLD SIZING GUIDANCE.
- DUE TO THE ADAPTATION OF THIS CHAMBER SYSTEM TO SPECIFIC SITE AND DESIGN CONSTRAINTS, IT MAY BE NECESSARY TO CUT AND COUPLE ADDITIONAL PIPE TO STANDARD MANIFOLD COMPONENTS IN THE FIELD.

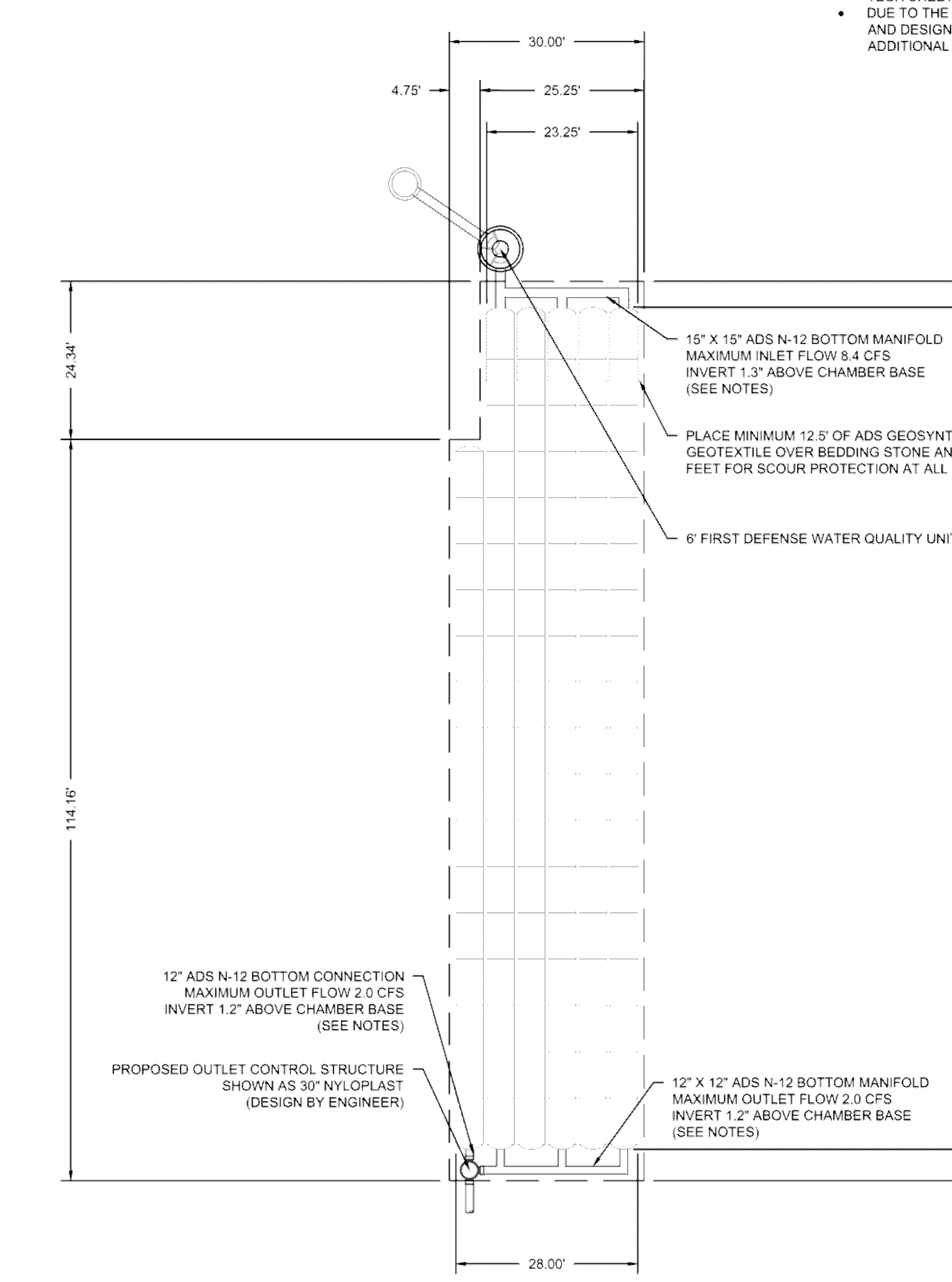

CULVERS'S WESTFIELD, IN — DATE: 10-08-15 — DRAWN: CA — PROJECT #: 118284 — CHECKED: GFI — REV / DRW / CHK / DESCRIPTION

StormTech — 70 INWOOD ROAD, SUITE 3 | ROCKY HILL | CT | 06067 — 860-529-8188 | 888-892-2694 | WWW.STORMTECH.COM

ADS — 4640 TRUEMAN BLVD, HILLIARD, OH 43026, 1-800-733-7473 — 0 20' 40'

THIS DRAWING HAS BEEN PREPARED BASED ON INFORMATION PROVIDED TO ADS UNDER THE DIRECTION OF THE SITE DESIGN ENGINEER OR OTHER PROJECT REPRESENTATIVE. THE SITE DESIGN ENGINEER SHALL REVIEW THIS DRAWING PRIOR TO CONSTRUCTION. IT IS THE ULTIMATE RESPONSIBILITY OF THE SITE DESIGN ENGINEER TO ENSURE THAT THE PRODUCT(S) DEPICTED AND ALL ASSOCIATED DETAILS MEET ALL APPLICABLE LAWS, REGULATIONS, AND PROJECT REQUIREMENTS.

SHEET 2 OF 4

ACCEPTABLE FILL MATERIALS: STORMTECH SC-740 CHAMBER SYSTEMS

MATERIAL LOCATION		DESCRIPTION	AASHTO MATERIAL CLASSIFICATIONS	COMPACTION / DENSITY REQUIREMENT
D	**FINAL FILL:** FILL MATERIAL FOR LAYER 'D' STARTS FROM THE TOP OF THE 'C' LAYER TO THE BOTTOM OF FLEXIBLE PAVEMENT OR UNPAVED FINISHED GRADE ABOVE. NOTE THAT PAVEMENT SUBBASE MAY BE PART OF THE 'D' LAYER	ANY SOIL/ROCK MATERIALS, NATIVE SOILS, OR PER ENGINEER'S PLANS. CHECK PLANS FOR PAVEMENT SUBGRADE REQUIREMENTS.	N/A	PREPARE PER SITE DESIGN ENGINEER'S PLANS. PAVED INSTALLATIONS MAY HAVE STRINGENT MATERIAL AND PREPARATION REQUIREMENTS.
C	**INITIAL FILL:** FILL MATERIAL FOR LAYER 'C' STARTS FROM THE TOP OF THE EMBEDMENT STONE ('B' LAYER) TO 18" (450 mm) ABOVE THE TOP OF THE CHAMBER. NOTE THAT PAVEMENT SUBBASE MAY BE A PART OF THE 'C' LAYER.	GRANULAR WELL-GRADED SOIL/AGGREGATE MIXTURES, <35% FINES OR PROCESSED AGGREGATE. MOST PAVEMENT SUBBASE MATERIALS CAN BE USED IN LIEU OF THIS LAYER.	AASHTO M145[1] A-1, A-2-4, A-3 OR AASHTO M43[1] 3, 357, 4, 467, 5, 56, 57, 6, 67, 68, 7, 78, 8, 89, 9, 10	BEGIN COMPACTIONS AFTER 12" (300 mm) OF MATERIAL OVER THE CHAMBERS IS REACHED. COMPACT ADDITIONAL LAYERS IN 6" (150 mm) MAX LIFTS TO A MIN. 95% PROCTOR DENSITY FOR WELL GRADED MATERIAL AND 95% RELATIVE DENSITY FOR PROCESSED AGGREGATE MATERIALS. ROLLER GROSS VEHICLE WEIGHT NOT TO EXCEED 12,000 lbs (53 kN). DYNAMIC FORCE NOT TO EXCEED 20,000 lbs (89 kN).
B	**EMBEDMENT STONE:** FILL SURROUNDING THE CHAMBERS FROM THE FOUNDATION STONE ('A' LAYER) TO THE 'C' LAYER ABOVE.	CLEAN, CRUSHED, ANGULAR STONE	AASHTO M43[1] 3, 357, 4, 467, 5, 56, 57	NO COMPACTION REQUIRED.
A	**FOUNDATION STONE:** FILL BELOW CHAMBERS FROM THE SUBGRADE UP TO THE FOOT (BOTTOM) OF THE CHAMBER.	CLEAN, CRUSHED, ANGULAR STONE	AASHTO M43[1] 3, 357, 4, 467, 5, 56, 57	PLATE COMPACT OR ROLL TO ACHIEVE A FLAT SURFACE. [2,3]

PLEASE NOTE:
1. THE LISTED AASHTO DESIGNATIONS ARE FOR GRADATIONS ONLY. THE STONE MUST ALSO BE CLEAN, CRUSHED, ANGULAR. FOR EXAMPLE, A SPECIFICATION FOR #4 STONE WOULD STATE: "CLEAN, CRUSHED, ANGULAR NO. 4 (AASHTO M43) STONE".
2. STORMTECH COMPACTION REQUIREMENTS ARE MET FOR 'A' LOCATION MATERIALS WHEN PLACED AND COMPACTED IN 6" (150 mm) (MAX) LIFTS USING TWO FULL COVERAGES WITH A VIBRATORY COMPACTOR.
3. WHERE INFILTRATION SURFACES MAY BE COMPROMISED BY COMPACTION, FOR STANDARD DESIGN LOAD CONDITIONS, A FLAT SURFACE MAY BE ACHIEVED BY RAKING OR DRAGGING WITHOUT COMPACTION EQUIPMENT. FOR SPECIAL LOAD DESIGNS, CONTACT STORMTECH FOR COMPACTION REQUIREMENTS.

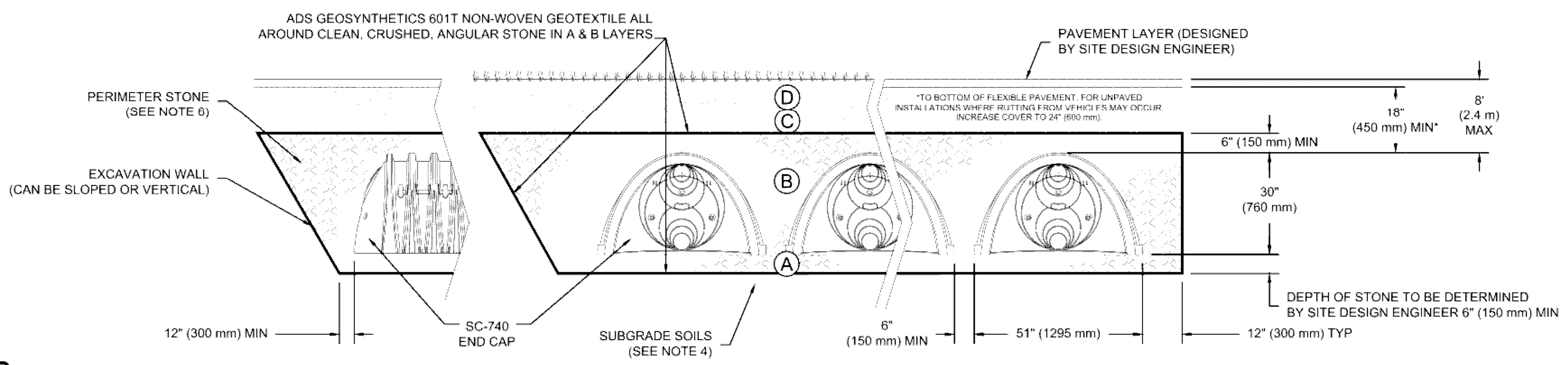

NOTES:

1. SC-740 CHAMBERS SHALL CONFORM TO THE REQUIREMENTS OF ASTM F2418 "STANDARD SPECIFICATION FOR POLYPROPYLENE (PP) CORRUGATED WALL STORMWATER COLLECTION CHAMBERS", OR ASTM F2922 "STANDARD SPECIFICATION FOR POLYETHYLENE (PE) CORRUGATED WALL STORMWATER COLLECTION CHAMBERS".
2. SC-740 CHAMBERS SHALL BE DESIGNED IN ACCORDANCE WITH ASTM F2787 "STANDARD PRACTICE FOR STRUCTURAL DESIGN OF THERMOPLASTIC CORRUGATED WALL STORMWATER COLLECTION CHAMBERS".
3. "ACCEPTABLE FILL MATERIALS" TABLE ABOVE PROVIDES MATERIAL LOCATIONS, DESCRIPTIONS, GRADATIONS, AND COMPACTION REQUIREMENTS FOR FOUNDATION, EMBEDMENT, AND FILL MATERIALS.
4. THE SITE DESIGN ENGINEER IS RESPONSIBLE FOR ASSESSING THE BEARING RESISTANCE (ALLOWABLE BEARING CAPACITY) OF THE SUBGRADE SOILS AND THE DEPTH OF FOUNDATION STONE WITH CONSIDERATION FOR THE RANGE OF EXPECTED SOIL MOISTURE CONDITIONS.
5. PERIMETER STONE MUST BE EXTENDED HORIZONTALLY TO THE EXCAVATION WALL FOR BOTH VERTICAL AND SLOPED EXCAVATION WALLS.
6. ONCE LAYER 'C' IS PLACED, ANY SOIL/MATERIAL CAN BE PLACED IN LAYER 'D' UP TO THE FINISHED GRADE. MOST PAVEMENT SUBBASE SOILS CAN BE USED TO REPLACE THE MATERIAL REQUIREMENTS OF LAYER 'C' OR 'D' AT THE SITE DESIGN ENGINEER'S DISCRETION.

CULVERS'S WESTFIELD, IN — DATE: 10-08-15 — DRAWN: CA — PROJECT #: 118284 — CHECKED: GFI

SHEET 3 OF 4

NYLOPLAST DRAIN BASIN

NTS

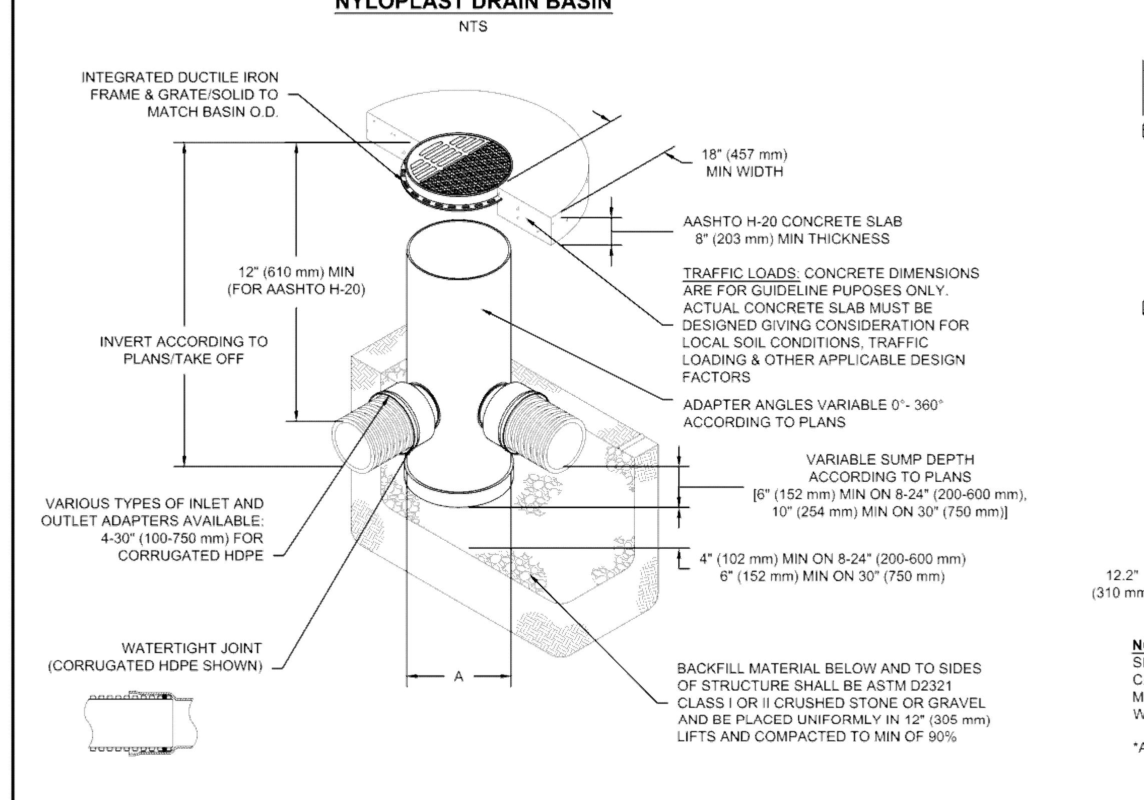

NOTES

1. 8-30" (200-750 mm) GRATES/SOLID COVERS SHALL BE DUCTILE IRON PER ASTM A536 GRADE 70-50-05
2. 12-30" (300-750 mm) FRAMES SHALL BE DUCTILE IRON PER ASTM A536 GRADE 70-50-05
3. DRAIN BASIN TO BE CUSTOM MANUFACTURED ACCORDING TO PLAN DETAILS
4. DRAINAGE CONNECTION STUB JOINT TIGHTNESS SHALL CONFORM TO ASTM D3212 FOR CORRUGATED HDPE (ADS & HANCOR DUAL WALL) & SDR 35 PVC
5. FOR COMPLETE DESIGN AND PRODUCT INFORMATION: **WWW.NYLOPLAST-US.COM**
6. TO ORDER CALL: **800-821-6710**

A	PART #	GRATE/SOLID COVER OPTIONS		
8" (200 mm)	2808AG	PEDESTRIAN LIGHT DUTY	STANDARD LIGHT DUTY	SOLID LIGHT DUTY
10" (250 mm)	2810AG	PEDESTRIAN LIGHT DUTY	STANDARD LIGHT DUTY	SOLID LIGHT DUTY
12" (300 mm)	2812AG	PEDESTRIAN AASHTO H-10	STANDARD AASHTO H-20	SOLID AASHTO H-20
15" (375 mm)	2815AG	PEDESTRIAN AASHTO H-10	STANDARD AASHTO H-20	SOLID AASHTO H-20
18" (450 mm)	2818AG	PEDESTRIAN AASHTO H-10	STANDARD AASHTO H-20	SOLID AASHTO H-20
24" (600 mm)	2824AG	PEDESTRIAN AASHTO H-10	STANDARD AASHTO H-20	SOLID AASHTO H-20
30" (750 mm)	2830AG	PEDESTRIAN AASHTO H-20	STANDARD AASHTO H-20	SOLID AASHTO H-20

SC-740 TECHNICAL SPECIFICATION

NTS

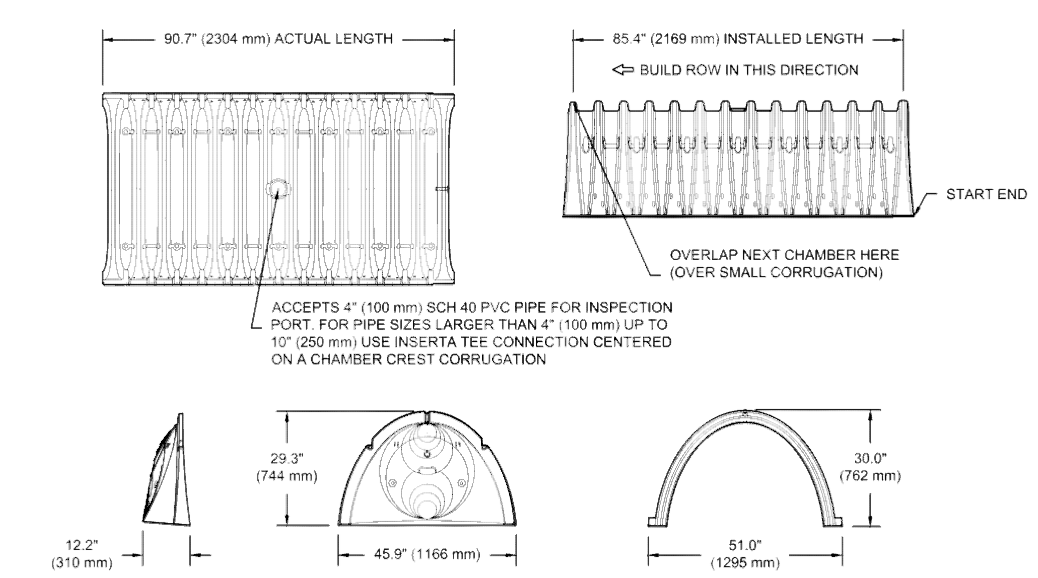

NOMINAL CHAMBER SPECIFICATIONS

SIZE (W X H X INSTALLED LENGTH)	51.0" X 30.0" X 85.4"	(1295 mm X 762 mm X 2169 mm)
CHAMBER STORAGE	45.9 CUBIC FEET	(1.30 m³)
MINIMUM INSTALLED STORAGE*	74.9 CUBIC FEET	(2.12 m³)
WEIGHT	75.0 lbs.	(33.6 kg)

*ASSUMES 6" (152 mm) STONE ABOVE, BELOW, AND BETWEEN CHAMBERS

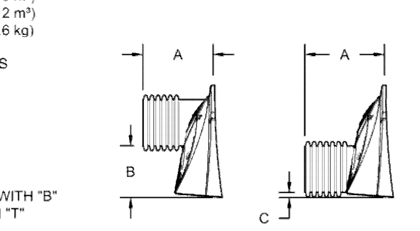

PRE-FAB STUBS AT BOTTOM OF END CAP FOR PART NUMBERS ENDING WITH "B"
PRE-FAB STUBS AT TOP OF END CAP FOR PART NUMBERS ENDING WITH "T"
PRE-CORED END CAPS END WITH "PC"

PART #	STUB	A	B	C
SC740EPE06T / SC740EPE06TPC	6" (150 mm)	10.9" (277 mm)	18.5" (470 mm)	---
SC740EPE06B / SC740EPE06BPC			---	0.5" (13 mm)
SC740EPE08T /SC740EPE08TPC	8" (200 mm)	12.2" (310 mm)	16.5" (419 mm)	---
SC740EPE08B / SC740EPE08BPC			---	0.6" (15 mm)
SC740EPE10T / SC740EPE10TPC	10" (250 mm)	13.4" (340 mm)	14.5" (368 mm)	---
SC740EPE10B / SC740EPE10BPC			---	0.7" (18 mm)
SC740EPE12T / SC740EPE12TPC	12" (300 mm)	14.7" (373 mm)	12.5" (318 mm)	---
SC740EPE12B / SC740EPE12BPC			---	1.2" (30 mm)
SC740EPE15T / SC740EPE15TPC	15" (375 mm)	18.4" (467 mm)	9.0" (229 mm)	---
SC740EPE15B / SC740EPE15BPC			---	1.3" (33 mm)
SC740EPE18T / SC740EPE18TPC	18" (450 mm)	19.7" (500 mm)	5.0" (127 mm)	---
SC740EPE18B / SC740EPE18BPC			---	1.6" (41 mm)
SC740EPE24B*	24" (600 mm)	18.5" (470 mm)	---	0.1" (3 mm)

ALL STUBS, EXCEPT FOR THE SC740EPE24B ARE PLACED AT BOTTOM OF END CAP SUCH THAT THE OUTSIDE DIAMETER OF THE STUB IS FLUSH WITH THE BOTTOM OF THE END CAP. FOR ADDITIONAL INFORMATION CONTACT STORMTECH AT 1-888-892-2694.

* FOR THE SC740EPE24B THE 24" (600 mm) STUB LIES BELOW THE BOTTOM OF THE END CAP APPROXIMATELY 1.75" (44 mm). BACKFILL MATERIAL SHOULD BE REMOVED FROM BELOW THE N-12 STUB SO THAT THE FITTING SITS LEVEL.

NOTE: ALL DIMENSIONS ARE NOMINAL

CULVERS'S WESTFIELD, IN — DATE: 10-08-15 — DRAWN: CA — PROJECT #: 118284 — CHECKED: GFI

Nyloplast — 3130 VERONA AVE, BUFORD, GA 30518, PHN (770) 932-2443, FAX (770) 932-2490, www.nyloplast-us.com

SHEET 4 OF 4

*** ALL PRODUCT DETAILS SHOWN ON THIS SHEET CAN BE TREATED AS AN "OR EQUAL" UPON ACCEPTANCE BY THE CITY OF WESTFIELD.**

10505 N. College Avenue
Indianapolis, Indiana 46280
weihe.net
317 | 846 - 6611
800 | 452 - 6408
317 | 843 - 0546 fax
ALLAN H. WEIHE, P.E., L.S. - FOUNDER

WEIHE ENGINEERS
Land Surveying | Civil Engineering
Landscape Architecture

PROJECT NO.:	W15.0316
DWG NAME:	w150316-C602 drainage det.dwg
DESIGNED BY:	RLW
DRAWN BY:	RLW
CHECKED BY:	BJS
DATE:	01.29.2016

REVISIONS AND ISSUES	DATE	BY
SUBMITTED FOR COUNTY SURVEYOR REVIEW	10.16.2015	BJS
ISSUED FOR TAC REVIEW	01.29.2016	BJS

STEVEN SCOTT RUCKER REGISTERED PE11300279 STATE OF INDIANA PROFESSIONAL ENGINEER — APPROVAL PENDING NOT FOR CONSTRUCTION

STEVEN SCOTT RUCKER P.E. 11300279

PREPARED FOR: Culver's of WESTFIELD

17651 SUN PARK DRIVE, WESTFIELD, IN 46074

DRAINAGE DETAILS

Part of SW/4, Section 36, Township 19 North, Range 3 East, Washington Township, Hamilton County, Indiana

SHEET NO. C603

PROJECT NO. W15.0316

LOCATION: H:\2015\w150316\Engineering\design\conset\w150316-C602 drainage det.dwg
LAYOUT: C603
DATE/TIME: January 28, 2016 - 2:44pm
PLOTTED BY: schoeffb

THIS DETAIL IS THE 5TH DETAIL ASSOCIATED WITH THE DETAILS ON SHEET C603.

PROJECT INFORMATION	
ENGINEERED PRODUCT MANAGER:	JOE ROGERS 317-417-0385 JOE.ROGERS@ADS-PIPE.COM
ADS SALES REP:	JOHN ADAMS 317-506-1838 JOHN.ADAMS@ADS-PIPE.COM
PROJECT NO:	118284

APPROVED BY:
SIGNED:
DATE:
COMPANY:
PHONE / EMAIL:

ADVANCED DRAINAGE SYSTEMS, INC.

Hydro International stormwater

THE DOWNSTREAM DEFENDER ® AND FIRST DEFENSE ® ARE DESIGNED, MANUFACTURED AND SUPPLIED BY HYDRO INTERNATIONAL PLC, AND ALL TRADEMARKS ARE THE PROPERTY OF HYDRO INTERNATIONAL PLC.

CULVERS

WESTFIELD, IN

CONTRACTOR PROVIDED DELIVERY SCHEDULE & SITE INFORMATION:

SCHEDULING INFORMATION									
SYSTEM DESIGNATION / SIZE									
SYSTEM DELIVERY DATE									

*ACTUAL DATE REQUIRED, ASAP IS NOT ACCEPTABLE AND A MINIMUM OF 4 WEEKS MUST BE PROVIDED UNLESS OTHERWISE DISCUSSED WITH A SALES REPRESENTATIVE.

DELIVERY INFORMATION			
JOB SITE STREET ADDRESS		CITY	
CONTACT		CONTACT PHONE	
ALTERNATE CONTACT		ALTERNATE PHONE	

DIRECTIONS TO JOB SITE FROM NEAREST INTERSTATE:
(PLEASE NO MAPS)

PARTS LIST : **6' FIRST DEFENSE**			
ITEM	SIZE (IN)	MATERIAL	DESCRIPTION
1	72	-	I.D. PRECAST MANHOLE
2	-	-	INLET CHUTE
3	-	-	OUTLET CHUTE
4	-	-	HIGH FLOW BYPASS
5	30		FRAME & COVER
6	15	HDPE	OUTLET PIPE (BY OTHERS)
7	15	HDPE	INLET PIPE (BY OTHERS)

NOTES:
ENGINEER / CONTRACTOR TO CONFIRM PIPE MATERIAL

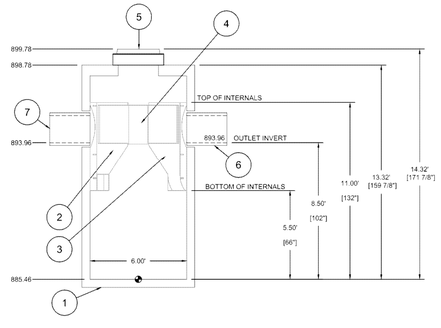

SECTION A-A
1/4" = 1.0'
(PIPE Ø NOT TO SCALE)

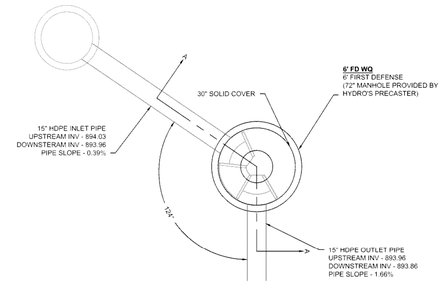

PLAN VIEW
1" = 5'

CAPACITIES
1. PEAK HYDRAULIC FLOW: 18.0 CFS (510 L/S)
2. PEAK TREATMENT FLOW: 2.2 CFS (62 L/S)
3. SEDIMENT STORAGE CAPACITY: 3.1 YD³ (2.37 m³)
4. OIL STORAGE CAPACITY: 420 GALLONS (1590 LITERS)

ADDITIONAL DESIGN INFORMATION
1. MAXIMUM INLET/OUTLET PIPE DIAMETERS: 24"
2. MAXIMUM NUMBER OF INLET PIPES: 2
3. MINIMUM ANGLE BETWEEN PIPES: 90°

ADS 4640 TRUEMAN BLVD. HILLIARD, OH. 43026 1-800-733-7473

CULVERS
WESTFIELD, IN
DATE: 10-06-15
PROJECT # 118284
DRAWN: CA
CHECKED: BL

REV	DRWN	CHK	DESCRIPTION

Hydro International stormwater

THE DOWNSTREAM DEFENDER ® AND FIRST DEFENSE ® ARE DESIGNED, MANUFACTURED AND SUPPLIED BY HYDRO INTERNATIONAL PLC, AND ALL TRADEMARKS ARE THE PROPERTY OF HYDRO INTERNATIONAL PLC.

AS NOTED

SHEET
2 OF 2

* ALL PRODUCT DETAILS SHOWN ON THIS SHEET CAN BE TREATED AS AN "OR EQUAL" UPON ACCEPTANCE BY THE CITY OF WESTFIELD.

WEIHE ENGINEERS
Land Surveying | Civil Engineering
Landscape Architecture
10505 N. College Avenue
Indianapolis, Indiana 46280
weihe.net
317 | 846 - 6611
800 | 452 - 6408
317 | 843 - 0546 *fax*
ALLAN H. WEIHE, P.E., L.S. - FOUNDER

PROJECT NO: W15.0316
DWG NAME: w15316 C602 drainage det.dwg
DESIGNED BY: RJW
DRAWN BY: RJW
CHECKED BY: BJS
DATE: 01.29.2016

REVISIONS, ADDITIONS, AND NOTES	DATE	BY
SUBMITTED FOR COUNTY SURVEYOR REVIEW	12.16.2015	BJS
ISSUED FOR TAC REVIEW	01.29.2016	BJS

STEVEN SCOTT RUCKER P.E. 11300279

PREPARED FOR: Culvers

of WESTFIELD

17651 SUN PARK DRIVE, WESTFIELD, IN 46074

DRAINAGE DETAILS

Part of SW4, Section 36, Township 19 North, Range 3 East, Washington Township, Hamilton County, Indiana

SHEET NO.
C604

PROJECT NO.
W15.0316

LOCATION: I:\2015\w15316\Engineering\Design\Constr\w15316 -C602 drainage det.dwg
LAYOUT: Layout1
DATE/TIME: January 28, 2016 - 2:44pm
PLOTTED BY: schoettp

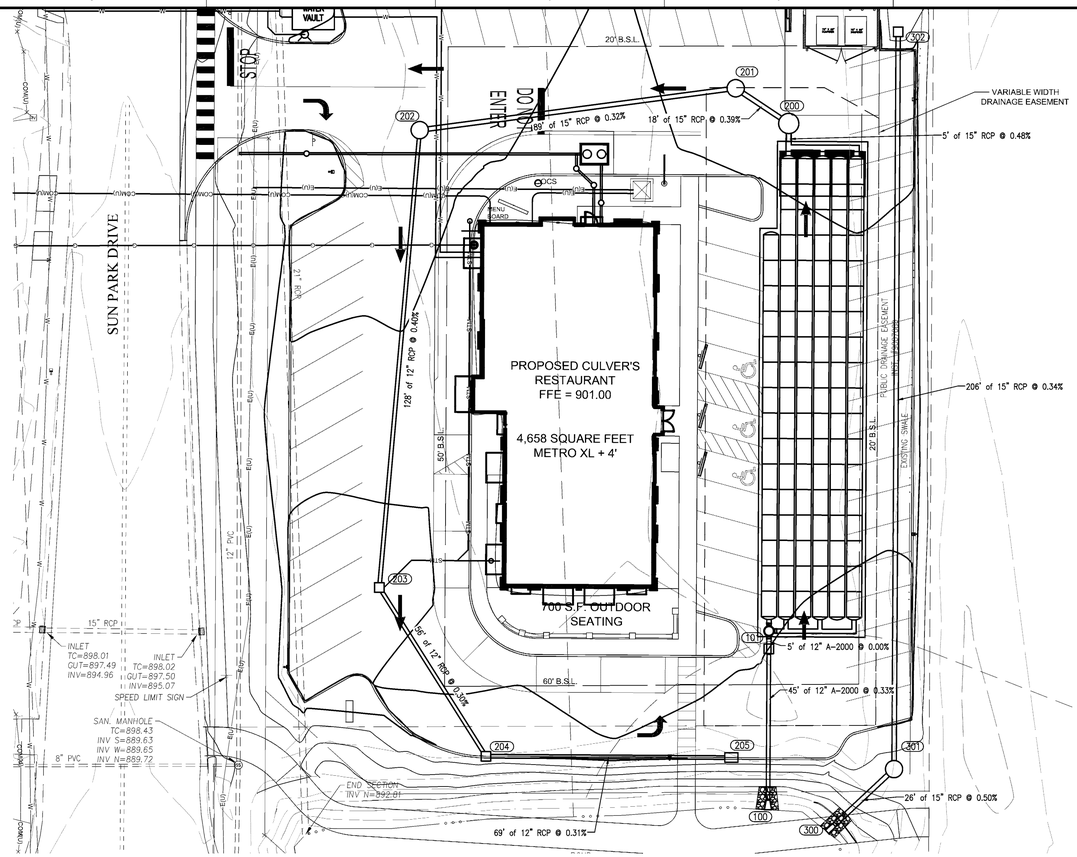

-NOTE-

RUN WATER LINE A MINIMUM OF 54" DEEP.
PROVIDE MINIMUM OF 10' HORIZONTAL & 2' VERTICAL CLEARANCE BETWEEN WATER & SANITARY LINE. SANITARY SEWER LINE IN PROXIMITY OF WATER LINE SHALL BE C900 WATER MAIN GRADE PVC.

GENERAL NOTES

1. STRUCTURES DEEPER THAN 4' MUST BE ACCESSIBLE WITH STEPS.
2. ALL STORM SEWER SHALL BE CLEANED AND TELEVISED AFTER ALL UNDERGROUND UTILITIES ARE INSTALLED.
3. ALL BEEHIVE CASTINGS ON 2'x2' BOX SHALL HAVE A SQUARE RISER WITH A ROUND HOLE.

N W E S

VERTICAL SCALE 1" = 2.0 1.0 0.0

HORIZONTAL SCALE: 1" = 20' 0 10 20 30 40

PROFILE LEGEND

- EXISTING GRADE
- FINISHED GRADE
- GRANULAR BACKFILL

STORM 200

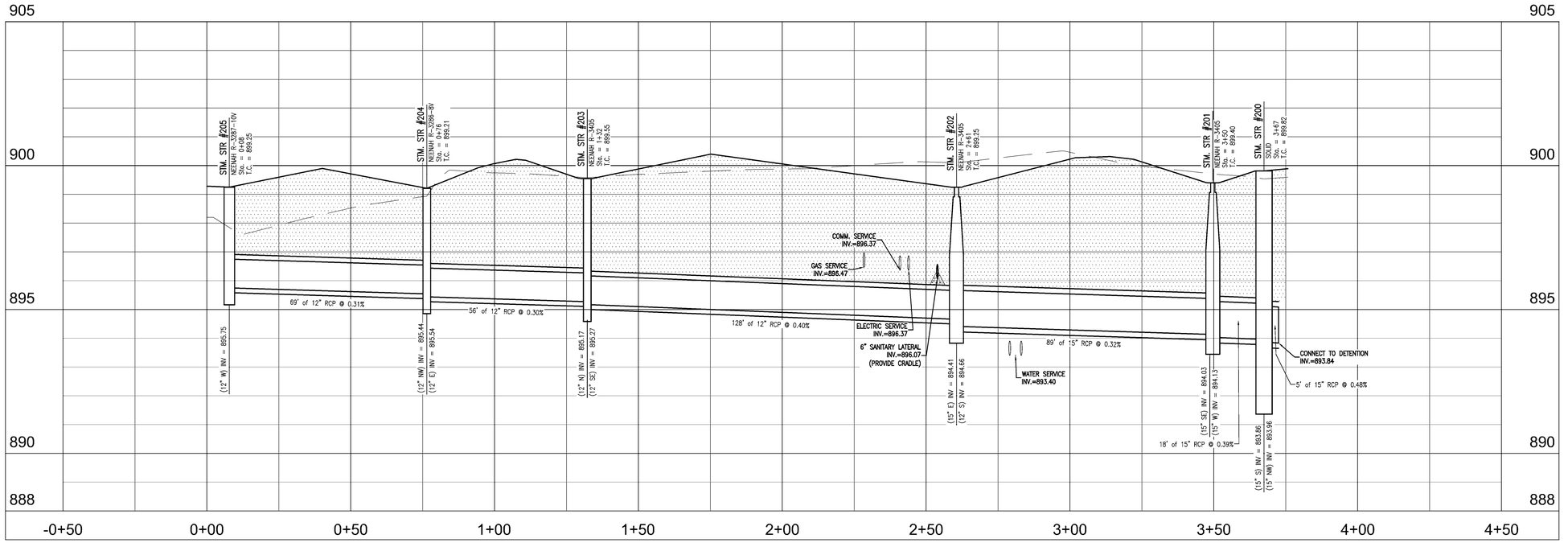

WEIHE ENGINEERS
Land Surveying | Civil Engineering
Landscape Architecture
10505 N. College Avenue
Indianapolis, Indiana 46280
weihe.net
317 | 846 - 6611
800 | 452 - 6408
317 | 843 - 0546 fax
ALLAN H. WEIHE, P.E., L.S. - FOUNDER

REVISIONS AND ISSUES	DATE	BY
SUBMITTED FOR COUNTY SURVEYOR REVIEW	10.15.2015	B.S
ISSUED FOR TAC REVIEW	01.29.2016	B.S

PROJECT NO.: W15.0316
DWG. NAME: w150316-C601 proj.dwg
DESIGNED BY: RJW
DRAWN BY: RJW
CHECKED BY: B.S
DATE: 01.29.2016

STEVEN SCOTT RUCKER P.E. 11300279

PREPARED FOR: Culver's of WESTFIELD

17651 SUN PARK DRIVE, WESTFIELD, IN 46074

STORM SEWER PLAN AND PROFILE

Part of SW/4 Section 36, Township 19 North, Range 3 East, Washington Township, Hamilton County, Indiana

SHEET NO.
C605

PROJECT NO.
W15.0316

Know what's below. Call before you dig.
Within Indiana Call 811 or 800-382-5544
24 hours a Day, 7 Days a Week.
PER INDIANA STATE LAW IC 8-1-26, IT IS AGAINST THE LAW TO EXCAVATE WITHOUT NOTIFYING THE UNDERGROUND LOCATION SERVICE TWO (2) WORKING DAYS BEFORE COMMENCING WORK.

LOCATION: H:\2015\w150316\Engineering\design\cosnet\w150316-C601 proj.dwg
LAYOUT: C605
DATE/TIME: January 28, 2016 - 2:45pm
PLOTTED BY: schoettb

STORM SEWER STRUCTURE DATA TABLE				
STRUCTURE NUMBER	STRUCTURE TYPE	TOP OF CASTING	CASTING TYPE	INVERT
100	END SECTION	894.26	END SECTION	INV IN = 893.08(N)
101	INLET TYPE A	900.00	CUSTOM GRATE	INV OUT = 893.23(S)

STORM SEWER PIPE DATA TABLE					
DOWNSTREAM STRUCTURE	UPSTREAM STRUCTURE	SIZE	MATERIAL	LENGTH	SLOPE
101	100	12"	A-2000	45'	0.33%

STORM SEWER STRUCTURE DATA TABLE				
STRUCTURE NUMBER	STRUCTURE TYPE	TOP OF CASTING	CASTING TYPE	INVERT
200	WQ	899.82	SOLID	INV IN = 893.96(NW) INV OUT = 893.86(S)
201	MANHOLE	899.40	NEENAH R-3405	INV IN = 894.13(W) INV OUT = 894.03(SE)
202	MANHOLE	899.25	NEENAH R-3405	INV IN = 894.66(S) INV OUT = 894.41(E)
203	INLET TYPE A	899.55	NEENAH R-3405	INV IN = 895.27(SE) INV OUT = 895.17(N)
204	INLET TYPE E	899.21	NEENAH R-3286-8V	INV IN = 895.54(E) INV OUT = 895.44(NW)
205	INLET TYPE J	899.25	NEENAH R-3287-10V	INV OUT = 895.75(W)

STORM SEWER PIPE DATA TABLE					
DOWNSTREAM STRUCTURE	UPSTREAM STRUCTURE	SIZE	MATERIAL	LENGTH	SLOPE
200		15"	RCP	5'	0.48%
201	200	15"	RCP	18'	0.39%
202	201	15"	RCP	89'	0.32%
203	202	12"	RCP	128'	0.40%
204	205	12"	RCP	69'	0.31%
204	203	12"	RCP	56'	0.30%

STORM SEWER STRUCTURE DATA TABLE				
STRUCTURE NUMBER	STRUCTURE TYPE	TOP OF CASTING	CASTING TYPE	INVERT
300	END SECTION	894.70	END SECTION	INV IN = 893.31(NE)
301	MANHOLE	898.35	NEENAH R-4342	INV IN = 893.54(N) INV OUT = 893.44(SW)
302	INLET TYPE A	898.01	NEENAH R-4342	INV OUT = 894.23(S)

STORM SEWER PIPE DATA TABLE					
DOWNSTREAM STRUCTURE	UPSTREAM STRUCTURE	SIZE	MATERIAL	LENGTH	SLOPE
300	301	15"	RCP	26'	0.50%
302	301	15"	RCP	206'	0.34%

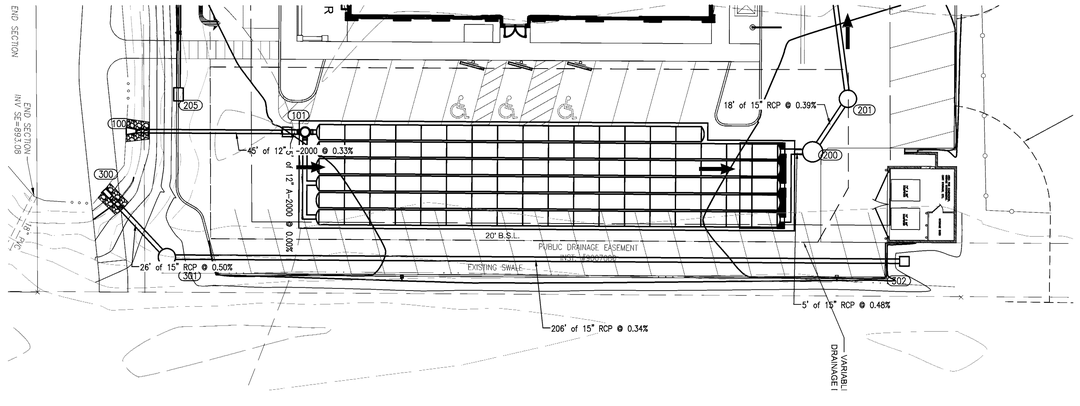

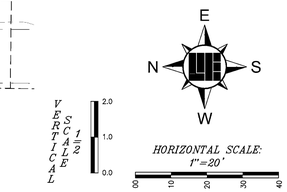

STORM 100

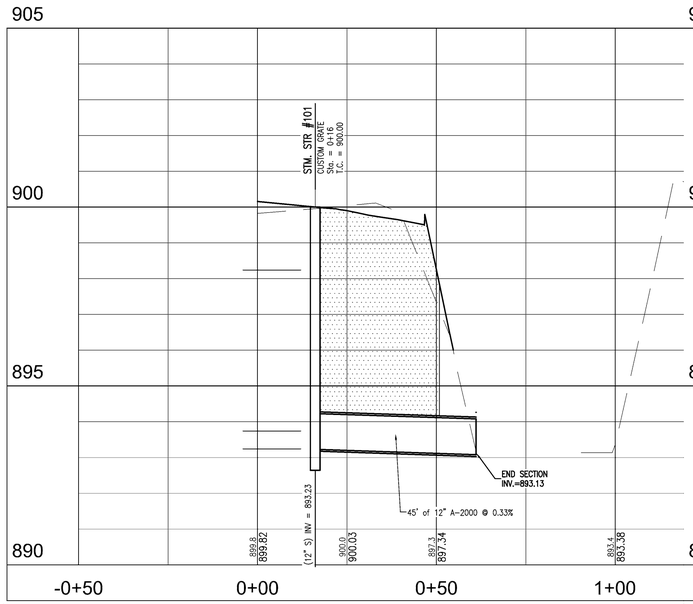

STORM 300

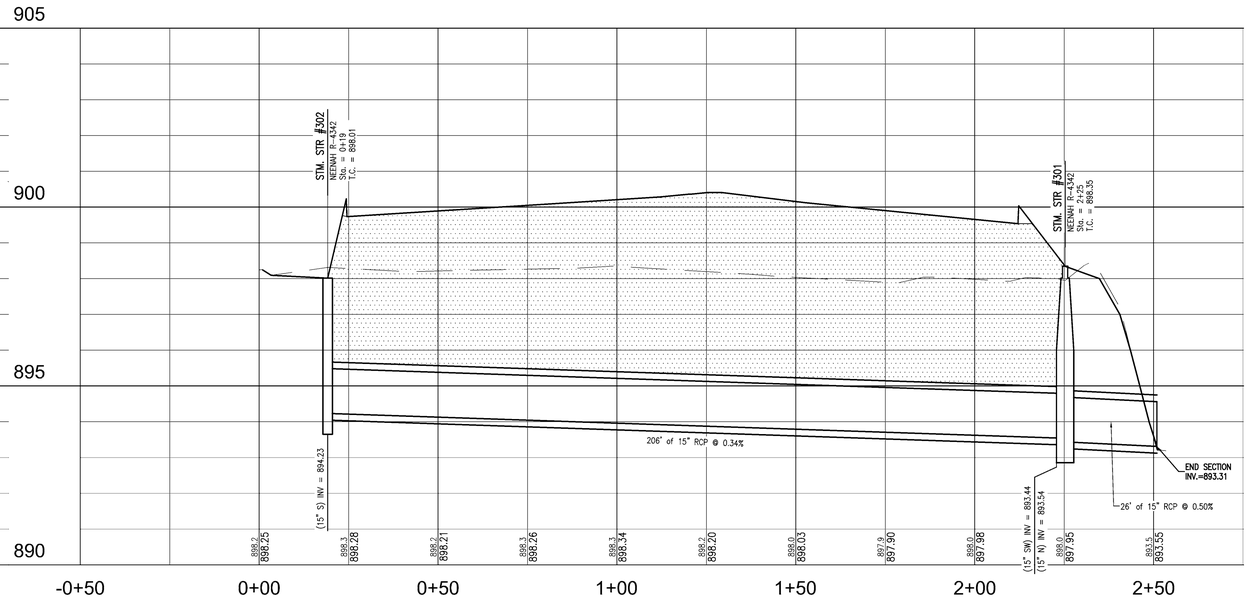

-NOTE-
RUN WATER LINE A MINIMUM OF 54" DEEP.
PROVIDE MINIMUM OF 10' HORIZONTAL & 2' VERTICAL CLEARANCE BETWEEN WATER & SANITARY LINE. SANITARY SEWER LINE IN PROXIMITY OF WATER LINE SHALL BE C900 WATER MAIN GRADE PVC.

GENERAL NOTES

1. STRUCTURES DEEPER THAN 4' MUST BE ACCESSIBLE WITH STEPS.
2. ALL STORM SEWER SHALL BE CLEANED AND TELEVISED AFTER ALL UNDERGROUND UTILITIES ARE INSTALLED.
3. ALL BEEHIVE CASTINGS ON 2'x2' BOX SHALL HAVE A SQUARE RISER WITH A ROUND HOLE.

PROFILE LEGEND
- EXISTING GRADE
- FINISHED GRADE
- GRANULAR BACKFILL

CONTRACTOR TO LOCATE THE BURIED DEPTHS OF THE EXISTING GAS AND WATER LINES AND CHECK FOR CROSSING CONFLICTS FOR THE INSTALLATION OF THE STORM SEWER. THE EXISTING UTILITIES MAY NEED RELOCATED TO ALLOW FOR THE STORM SEWER CONNECTION.

811 Know what's below. Call before you dig.
Within Indiana Call 811 or 800-382-5544
24 Hours a Day, 7 Days a Week.
PER INDIANA STATE LAW IC 8-1-26, IT IS AGAINST THE LAW TO EXCAVATE WITHOUT NOTIFYING THE UNDERGROUND LOCATION SERVICE TWO (2) WORKING DAYS BEFORE COMMENCING WORK.

WEIHE ENGINEERS
Land Surveying | Civil Engineering
Landscape Architecture
10505 N. College Avenue
Indianapolis, Indiana 46280
weihe.net
317 | 846 - 6611
800 | 452 - 6408
317 | 843 - 0546 fax
ALLAN H. WEIHE, P.E., L.S. - FOUNDER

REVISIONS AND NOTES	DATE	BY
SUBMITTED FOR COUNTY SURVEYOR REVIEW	12.15.2015	BJS
ISSUED FOR TAC REVIEW	01.29.2016	BJS

PROJECT NO.: W15.0316
DWG NAME: w15316-C601 proj.dwg
DESIGNED BY: RJW
DRAWN BY: RJW
CHECKED BY: BJS
DATE: 01.29.2016

STEVEN SCOTT RUCKER P.E. 11300279

PREPARED FOR: City of WESTFIELD
17651 SUN PARK DRIVE, WESTFIELD, IN 46074

STORM SEWER PLAN AND PROFILE
Part of SW/4, Section 36, Township 19 North, Range 3 East, Washington Township, Hamilton County, Indiana

SHEET NO.
C606
PROJECT NO.
W15.0316

LOCATION: H:\2015\w15316\Engineering\design\constr\w15316-C601 proj.dwg
LAYOUT: PROFILE
DATE/TIME: January 28, 2016 - 2:45pm
PLOTTED BY: schoettb

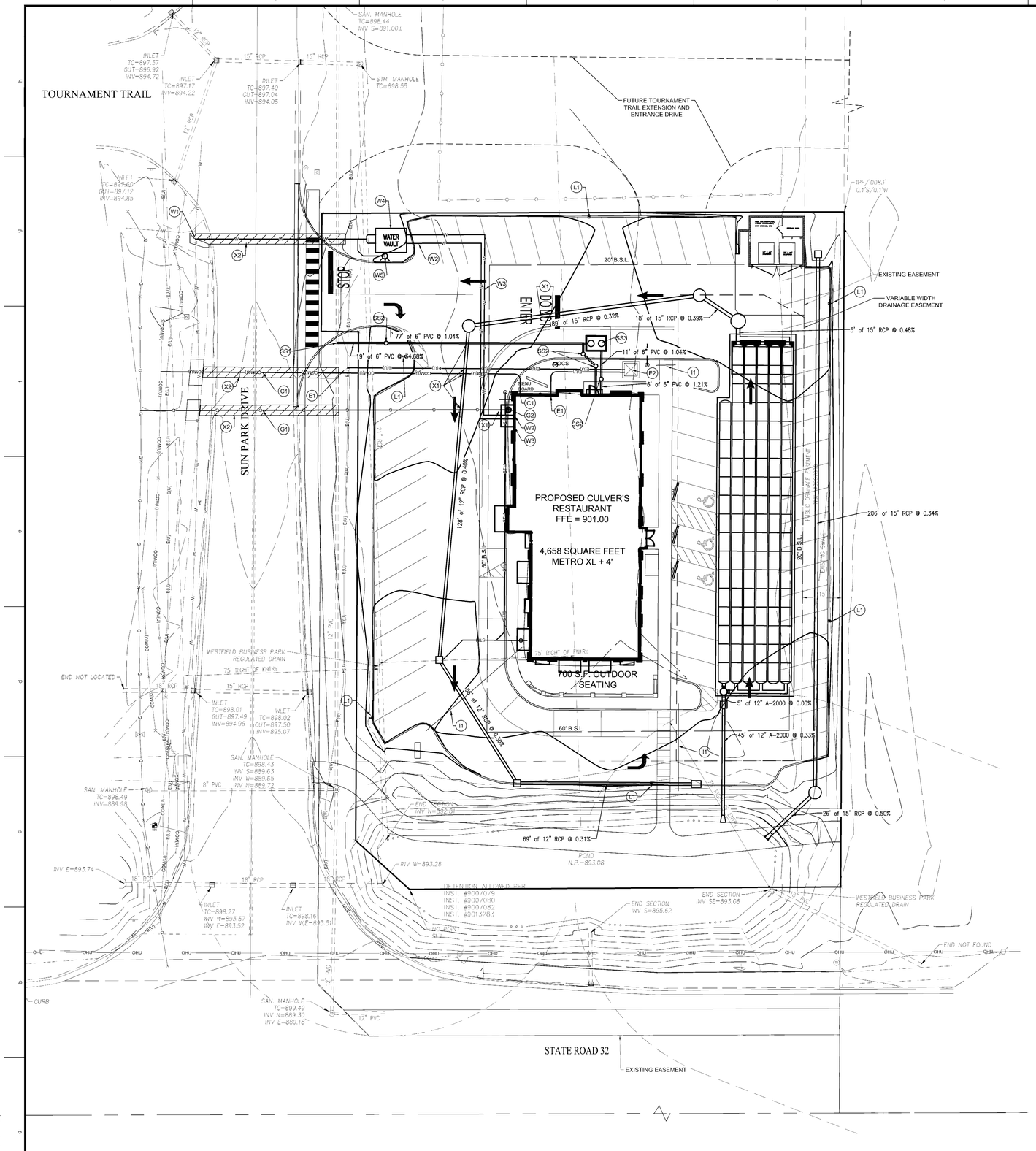

UTILITY PLAN NOTES

SANITARY SEWER NOTES

(SS1) CONNECT PROPOSED 6" PVC SDR 35 SANITARY SEWER LATERAL TO THE EXISTING 12" MAIN WITH A SADDLE TAP. COORDINATE BUILDING CONNECTION WITH MEP. PROVIDE CLEANOUTS AS REQUIRED/SHOWN. VERIFY INVERTS ON EXISTING LINE AND COORDINATE CONDITIONS WITH MEP. ADJUST AS REQUIRED

(SS2) PROPOSED TYPE I SANITARY LATERAL CLEANOUT. REFER TO DETAIL ON SHEET C802.

(SS3) GREASE INTERCEPTOR. REFER TO DETAIL ON SHEET C802.

WATER SERVICE NOTES:

(W1) COORDINATE AND CONNECT 6" WATER SERVICE LINE TO EXISTING 8" WATER MAIN WITH STAINLESS STEEL SADDLE TAP AND VALVE.

(W2) COORDINATE CONNECTION OF 2" PE DOMESTIC SERVICE LINE WITH PLUMBING DRAWINGS. DOMESTIC LINE SHALL HAVE LOCATE WIRE RUN THE ENTIRE LENGTH OF THE LINE.

(W3) 6" FIRE LINE TO BUILDING FOR SPRINKLER SYSTEM.

(W4) WATER VAULT. REFER TO WESTFIELD DETAIL ON SHEET C803

(W5) PROPOSED FIRE HYDRANT

ELECTRIC NOTES:

(E1) COORDINATE AND CONNECT BUILDING ELECTRICAL LINE TO ELECTRICAL TRANSFORMER. COORDINATE CONNECTION WITH POWER COMPANY AND ELECTRICAL DRAWINGS. ADJUST AS REQUIRED. 2-4" EC CONDUITS TO BE INSTALLED WITH PULL STRINGS.

(E2) 5'X8' TRANSFORMER PAD LOCATION. SHARED WITH ADJACENT MONON MARKETPLACE PROPERTY. COORDINATE WITH DUKE ENERGY FOR THE SERVICE CONNECTION TO THE TRANSFORMER, AND FROM THE TRANSFORMER TO THE BUILDING.

COMMUNICATION NOTES:

(C1) COORDINATE AND CONNECT BUILDING COMMUNICATION SERVICE LINE(S) TO CONNECTION POINT AS PROVIDED. COORDINATE CONNECTION WITH SITE DRAWINGS AND SERVICE PROVIDER FOR RELOCATION OF PEDESTAL. ADJUST AS REQUIRED. 4" PVC CONDUIT TO BE INSTALLED WITH PULL STRINGS. CONTRACTOR TO PROVIDE #6 GROUND WIRE AT THE D-MARC LOCATION. 7 LINES ANTICIPATED FOR SERVICE. (4 PHONE, 1 FO, 1 SECURITY AND 1 FAX/MODEM)

GAS SERVICE NOTES:

(G1) CONNECT PROPOSED GAS SERVICE TO EXISTING 2" GAS LINE ALONG SUNPARK DRIVE. REFER TO MEP / PLUMBING DRAWINGS AND COORDINATE WITH SERVICE PROVIDER.

(G2) PROPOSED GAS METER LOCATION.

LIGHTING NOTES:

(L1) SITE LIGHTING LOCATIONS. SEE VENDOR PLAN BY LSI FOR FURTHER DETAIL.

IRRIGATION NOTES:

(I1) PROVIDE (1) 4" CONDUIT UNDERNEATH THE PAVEMENT WHERE SHOWN FOR FUTURE IRRIGATION SERVICE. PLUG AND MARK FOR FUTURE USE.

CROSSING NOTE:

(X1) BE ADVISED OF UTILITY CROSSING. MAINTAIN 18" CLEARANCE OR PROVIDE CONCRETE CRADLE.

(X2) BORE UNDER ROAD FOR SPECIFIED UTILITY ROAD CROSSING. COORDINATE ROAD BORE WITH PROPOSED UTILITY PROVIDER.

GENERAL UTILITY NOTES

1. THE CONTRACTOR SHALL CONTACT ALL APPLICABLE UTILITIES AND VERIFY ANY AND ALL FEES ASSOCIATED WITH THE INSTALLATION OF ALL UTILITIES.
2. PROVIDE THRUST BLOCKS FOR ALL WATER LINE BENDS AND TEES, INCLUDING TAP CONNECTION.
3. CONTRACTOR SHALL COORDINATE WITH WATER COMPANY FOR DOMESTIC. CONNECT TO BUILDING DOMESTIC AND FIRE LINE. COORDINATE WITH PLUMBING DRAWINGS.
4. COORDINATE LOCATION OF ELECTRICAL AND TELEPHONE LINES WITH LOCAL UTILITIES.
5. COORDINATE LOCATION AND SIZE OF GAS SERVICE CONNECTION AND INSTALLATION OF SERVICE LINE AND METER WITH GAS COMPANY.
6. COORDINATE LOCATIONS AND CONNECTIONS OF BUILDING STORM LINES WITH PLUMBING DRAWINGS.
7. VERIFY EXISTING INVERT AND LOCATION OF SANITARY SEWER. ADJUST INVERTS AS REQUIRED. DOCUMENT ANY CHANGES.
8. MAINTAIN 10' HORIZONTAL AND 18" VERTICAL CLEARANCE BETWEEN STORM / SANITARY SEWER SYSTEMS AND DOMESTIC/FIRE LINE SERVICE.
9. FOLLOW ALL LOCAL AND STATE CODES IN REFERENCE TO DOMESTIC/FIRE LINE INSTALLATION AND STORM SEWER / SANITARY SEWER INSTALLATION.
10. COORDINATE LOCATION OF REQUIRED CONDUITS FOR LIGHT POLES, TELEPHONE SERVICE AND IRRIGATION SYSTEM.
11. COORDINATE UTILITY CONDUITS WITH SERVICE PROVIDERS.
12. SANITARY SEWER LATERAL, WATER SERVICE, & ELECTRICAL/TELEPHONE CONDUITS SHALL BE GRANULAR BACKFILL FOR ENTIRE RUN.
13. ALL WATER VALVES LOCATED WITHIN ASPHALT PAVEMENT SHALL HAVE A CONCRETE APRON AROUND THE VALVE COVER AND BE FORMED TO GRADE.
14. RUN WATER LINE A MINIMUM OF 54" DEEP. PROVIDE MINIMUM OF 10' HORIZONTAL & 2' VERTICAL CLEARANCE BETWEEN WATER & SANITARY LINE. SANITARY SEWER LINE IN PROXIMITY OF WATER LINE SHALL BE C900 WATER MAIN GRADE PVC.

WATER NOTES

1. POSI CAPS SHALL BE INSTALLED ON ALL VALVES.
2. MAIN SHALL BE SADDLE TAPPED AND BEDDED WITH SAND 6" BELOW AND 12" OVER THE PIPE WITH MARKING TAPE INSTALLED 2" ABOVE THE MAIN.
3. NUMBER TWELVE (#12) GUAGE LOCATING WIRE SHALL BE TAPED TO THE TOP OF THE MAIN AND PULLED THROUGH ALL VALVE BOXES (TO THE SURFACE) FOR LOCATING PURPOSES.

SANITARY NOTES

1. ALL SANITARY SEWER LATERALS SHALL HAVE LOCATE WIRE RUN WHEN INSTALLED.
2. CONTRACTOR SHALL INSTALL LATERAL NO GREATER THAN 6' BELOW PAD GRADE AT LATERAL END.
3. MINIMUM SLOPES PER TEN STATE STANDARDS SHALL PREVAIL IN ALL CASES.

TRANSFORMER DETAIL

A. Doors, Fire Escapes, or Fire Exits

Padmounted transformers shall not be located within a zone extending outward 20 feet and 10 feet to the side from any doorway, fire escape, or fire exit. See diagram below.

REFER TO THE COMPLETE DUKE ENERGY GUIDELINES AS PROVIDED IN THE SPECIFICATIONS.

UTILITY PLAN LEGEND

UTILITIES

- FIRE DEPT HOOKUP
- FIRE HYDRANT
- POST INDICATOR VALVE
- WATER MANHOLE
- SPRINKLER CONTROL BOX
- SPRINKLER CONTROL VALVE
- WATER METER
- WATER VALVE
- GAS METER
- GAS VALVE
- ELECTRIC MANHOLE
- ELECTRIC OUTLET
- ELECTRIC METER
- ELECTRICAL RISER
- TRANSFORMER
- GUY ANCHOR
- ELECTRIC JUNCTION BOX
- UTILITY POLE
- STREET LIGHT
- PARKING LOT LIGHT (1 HEAD)
- PARKING LOT LIGHT (2 HEAD)
- COMMUNICATIONS JUNCTION BOX
- COMMUNICATIONS MANHOLE
- COMMUNICATIONS PEDESTAL
- COMMUNICATIONS RISER
- TRAFFIC SIGNAL POLE
- STORM CLEANOUT
- BEEHIVE INLET
- CURB INLET
- ROUND INLET
- SQUARE INLET
- STORM MANHOLE
- SANITARY SEWER CLEANOUT
- SANITARY SEWER MANHOLE
- SANITARY STUB MARKER

LINE TYPES

- UNDERGROUND GAS
- UNDERGROUND WATER
- AERIAL ELECTRIC
- UNDERGROUND ELECTRIC
- UNDERGROUND COMMUNICATIONS
- AERIAL COMMUNICATIONS
- UNDERGROUND FIBER OPTIC
- OVERHEAD UTILITY
- FORCE MAIN
- SANITARY SEWER
- STORM SEWER
- RIGHT OF WAY LINE
- CHAIN LINK FENCE
- BOARD FENCE
- FARM FENCE
- BOUNDARY LINE
- SECTION LINE

ABBREVIATIONS

ROW	RIGHT OF WAY
BSL	BUILDING SETBACK LINE
ESMT	EASEMENT
D.&U.E.	DRAINAGE AND UTILITY EASEMENT
FFE	FINISH FLOOR ELEVATION
CMP	CORRUGATED METAL PIPE
RCP	REINFORCED CONCRETE PIPE
PVC	POLYVINYL CHLORIDE PIPE
VCP	VITRIFIED CLAY PIPE
HDPE	HIGH DENSITY POLYETHYLENE PIPE
DIP	DUCTILE IRON PIPE
FFE	FINISH FLOOR ELEVATION
INV	INVERT
TOC	TOP OF CASTING

N W E S

SCALE: 1" = 20'

0 10 20 40

Know what's **below.** **Call** before you dig.
Within Indiana Call 811 or 800-382-5544
24 Hours a Day, 7 Days a Week.
PER INDIANA STATE LAW IC 8-1-26, IT IS AGAINST THE LAW TO EXCAVATE WITHOUT NOTIFYING THE UNDERGROUND LOCATION SERVICE TWO (2) WORKING DAYS BEFORE COMMENCING WORK.

10505 N. College Avenue
Indianapolis, Indiana 46280
weihe.net
317 | 846 - 6611
800 | 452 - 6408
317 | 843 - 0546 *fax*
ALLAN H. WEIHE, P.E., L.S. - FOUNDER

WEIHE ENGINEERS
Land Surveying | Civil Engineering
Landscape Architecture

REVISIONS AND ISSUES	DATE	BY
SUBMITTED FOR COUNTY SURVEYOR REVIEW	10.16.2015	BJS
ISSUED FOR TAC REVIEW	01.29.2016	BJS

PROJECT NO.: W15.0316
DWG. NAME: w15316-c800 utl.dwg
DESIGNED BY: RJW
DRAWN BY: RJW
CHECKED BY: BJS
DATE: 01.29.2016

STEVEN SCOTT RUCKER P.E. 11300279

PREPARED FOR: Culver's

of WESTFIELD
17651 SUN PARK DRIVE, WESTFIELD, IN 46074

UTILITY PLAN
Part of SW/4, Section 36, Township 19 North, Range 3 East, Washington Township, Hamilton County, Indiana

SHEET NO.
C800

PROJECT NO.
W15.0316

LOCATION: H:_2015\w15316\Engineering\Design\Xcosse\w15316 - C800 utl.dwg
USER: schoettle
DATE/TIME: January 28, 2016 - 2:45pm
PLOTTED BY: schoettle

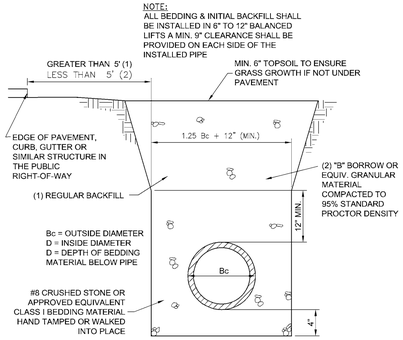

TYPICAL BEDDING SECTION - PVC & HDPE

(NO SCALE)

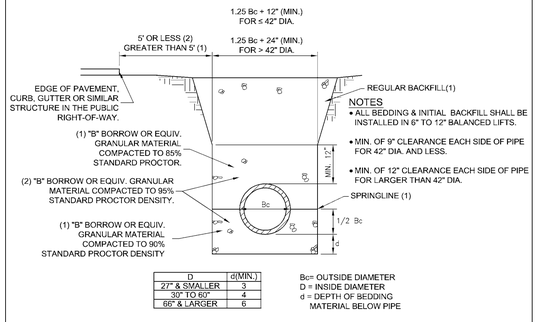

D	d(MIN.)
27" & SMALLER	3
30" TO 60"	4
66" & LARGER	6

Bc= OUTSIDE DIAMETER
D = INSIDE DIAMETER
d = DEPTH OF BEDDING MATERIAL BELOW PIPE

TYP. BEDDING SECTION - CMP

(NO SCALE)

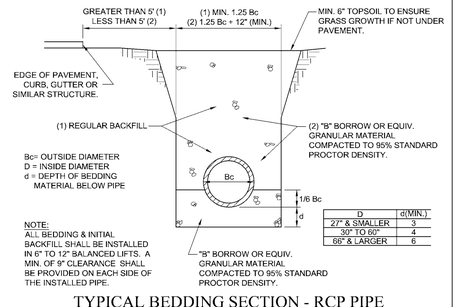

D	d(MIN.)
27" & SMALLER	3
30" TO 60"	4
66" & LARGER	6

TYPICAL BEDDING SECTION - RCP PIPE

(NO SCALE)

NOTE: TO BE USED WHEN CLEAR DISTANCE (FROM EXTERIOR PIPE DIAMETER TO EXTERIOR PIPE DIAMETER) BETWEEN SANITARY SEWER PIPING (MAINS, LATERALS, FORCE MAINS, ETC.) AND ALL OTHER PIPES IS 18" OR LESS, PER INSPECTOR'S DIRECTION, OR WHERE NOTED ON THE DRAWINGS. A MINIMUM CLEAR DISTANCE OF 3" MUST BE PROVIDED TO MAINTAIN STRUCTURAL INTEGRITY OF THE CONCRETE.

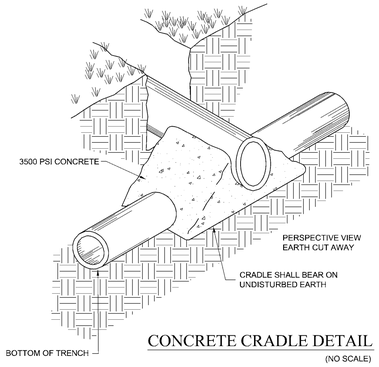

CONCRETE CRADLE DETAIL

(NO SCALE)

Know what's **below.**
Call before you dig.
Within Indiana Call
811 or 800-382-5544
24 Hours a Day, 7 Days a Week.

PER INDIANA STATE LAW IC 8-1-26, IT IS AGAINST THE LAW TO EXCAVATE WITHOUT NOTIFYING THE UNDERGROUND LOCATION SERVICE TWO (2) WORKING DAYS BEFORE COMMENCING WORK.

WEIHE ENGINEERS
Land Surveying | Civil Engineering
Landscape Architecture

10505 N. College Avenue
Indianapolis, Indiana 46280
weihe.net

317 | 846 - 6611
800 | 452 - 6408
317 | 843 - 0546 *fax*

ALLAN H. WEIHE, P.E., L.S. - FOUNDER

REVISIONS AND NOTES	DATE	BY
SUBMITTED FOR COUNTY SURVEYOR REVIEW	12.15.2015	BJS
ISSUED FOR TAC REVIEW	01.29.2016	BJS

PROJECT NO.: W15.0316
DWG. NAME: w15316-C801 utl det.dwg
DESIGNED BY: RJW
DRAWN BY: RJW
CHECKED BY: BJS
DATE: 01.29.2016

STEVEN SCOTT RUCKER P.E. 11300279

PREPARED FOR:
Calvert
of WESTFIELD
17651 SUN PARK DRIVE, WESTFIELD, IN 46074

UTILITY DETAILS
Part of SW/4 Section 36, Township 19 North, Range 3 East, Washington Township, Hamilton County, Indiana

SHEET NO.
C801

PROJECT NO.
W15.0316

LOCATION: H:\2015\w15316\Engineering\design\cosnet\w15316-C801 utl det.dwg
LAYOUT: C801
DATE/TIME: January 28, 2016 - 2:45pm
PLOTTED BY: schaefb

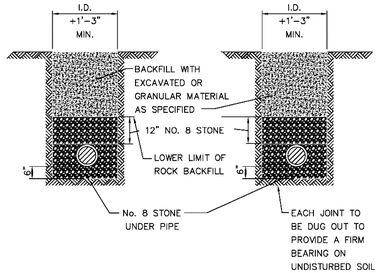

NOTES:
THIS DETAIL SHALL APPLY TO ALL SANITARY SEWER PIPE
ALL STONE TO BE INDOT CLASS 1 STONE

SEWER PIPE BEDDING DETAIL

CITY OF WESTFIELD, INDIANA

4/1/13
DATE

FIGURE S-5

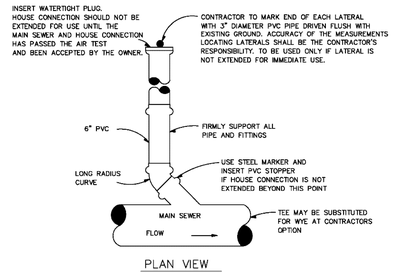

PLAN VIEW

NOTES:

1. WYE BRANCHES OR TEES SHALL BE INSTALLED WHERE INDICATED ON THE DRAWINGS. THEY SHALL BE EXTENDED TO PROPERTY LINE OF STREETS OR ALLEYS OR TO DISTANCES AS SHOWN ON THE DESIGN DRAWINGS AND SHALL BE OF 6" PVC SDR 35 UNLESS OTHERWISE SHOWN.
2. DEPTH AT PROPERTY LINE SHALL BE APPROXIMATELY 8'-0" UNLESS SEWER DEPTH IS LESS, IN WHICH EVENT A MINIMUM SLOPE OF 1/8" PER 1'-0" SHALL BE USED.
3. HOUSE SERVICE PIPE SHALL BE PVC SDR 35 CONFORMING TO ASTM D3034 WITH GASKETED JOINTS CONFORMING TO ASTM D3212 UNLESS OTHERWISE INDICATED.
4. HOUSE SERVICE PIPE SHALL BE INSTALLED PER SAME SPECIFICATIONS & DETAIL AS FOR MAIN LINE SEWER.

HOUSE/BUILDING SERVICE CONNECTION DETAIL 1

CITY OF WESTFIELD, INDIANA

4/1/13
DATE

FIGURE S-10

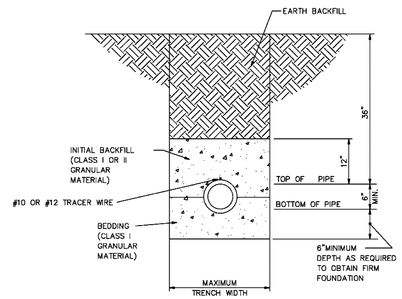

NOTES:

1. NOMINAL PIPE SIZE, (6" MIN.)
2. INSTALLATION OF FLEXIBLE PVC PIPE SHALL BE IN ACCORDANCE WITH SPECIFICATIONS CONTAINED IN ASTM D2321
3. CLASS I GRANULAR MATERIAL SHALL BE 1/4" TO 1 1/2" GRADED STONE, PER ASTM D2321 (#8 CRUSH STONE)
4. CLASS II GRANULAR MATERIAL SHALL BE COARSE SANDS AND GRAVELS MAX. PARTIAL SIZE OF 3/4"
5. SEE FIGURE S-5 FOR MAIN LINE SEWERS PIPE BEDDING DETAILS.
6. #10 OR #12 TRACER WIRE TO BE EXTENDED FROM SEWER MAIN TO 8" CLEAN OUT/CHECK VALVE RISER

HOUSE/BUILDING SERVICE BEDDING DETAILS

CITY OF WESTFIELD, INDIANA

4/1/13
DATE

FIGURE S-12

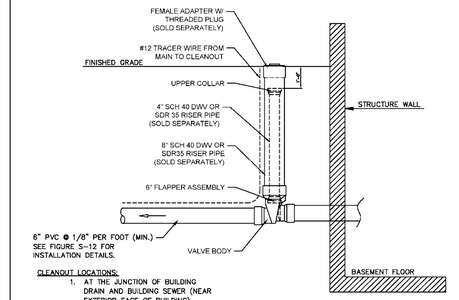

CLEANOUT LOCATIONS:

1. AT THE JUNCTION OF BUILDING DRAIN AND BUILDING SEWER (NEAR EXTERIOR FACE OF BUILDING)
2. IF BUILDING SEWER IS MORE THAN 100 FEET FROM MAIN LINE SEWER, CLEAN-OUTS SPACING SHALL NOT EXCEED 100 FEET.
3. A CLEANOUT IS REQUIRED AT EACH BEND THAT IS GREATER THAN 45 DEGREES.
4. THERE SHALL BE NO BASEMENT DRAINS CONNECTED TO SERVICE CONNECTION

GENERAL REQUIREMENTS

THE LOWEST FLOOR ELEVATION RECEIVING GRAVITY SERVICE MUST BE A MIN.THREE (3.0) FEET ABOVE TOP NEAREST MANHOLE RIM.

CHECK VALVE REQUIREMENTS

1. ALL HOUSES ARE REQUIRED TO HAVE A CHECK VALVE
2. NO CHECK VALVES ARE TO BE LOCATED IN THE BASEMENT
3. USE RECTORSEAL CANPLAS OR APPROVED EQUAL

HOUSE/BUILDING SERVICE CLEAN-OUT/CHECK VALVE DETAIL

CITY OF WESTFIELD, INDIANA

4/1/13
DATE

FIGURE S-13

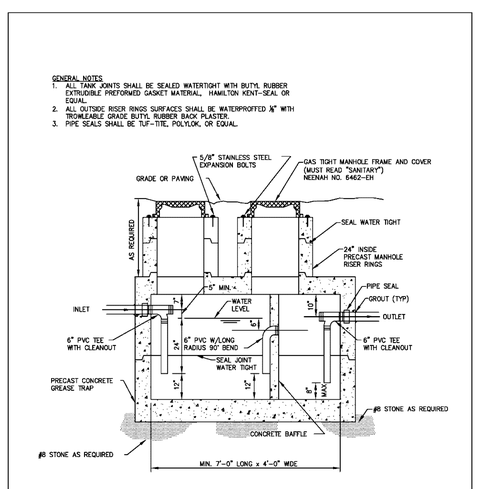

GREASE TRAP DETAIL

CITY OF WESTFIELD, INDIANA

4/1/14
DATE

FIGURE S-14

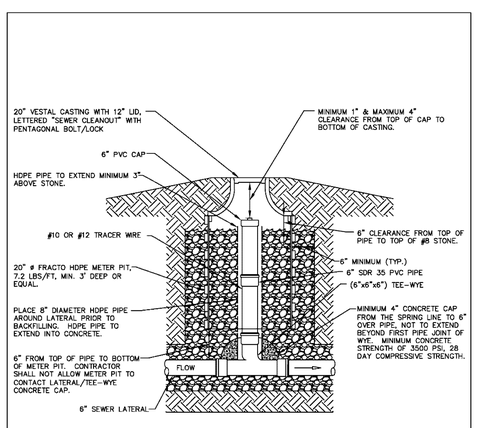

*WHEN REQUIRED BY WESTFIELD PUBLIC WORKS

DRAWING NOT TO SCALE

TYPE 2 CLEAN-OUT DETAIL

CITY OF WESTFIELD, INDIANA

4/1/14
DATE

FIGURE S-15

* ALL DETAILS SHOWN ON THIS SHEET WERE PROVIDED BY CITIZENS ENERGY GROUP

Know what's **below.** **Call** before you dig.
Within Indiana Call
811 or 800-382-5544
24 Hours a Day, 7 Days a Week.

PER INDIANA STATE LAW IC 8-1-26, IT IS AGAINST THE LAW TO EXCAVATE WITHOUT NOTIFYING THE UNDERGROUND LOCATION SERVICE TWO (2) WORKING DAYS BEFORE COMMENCING WORK.

WEIHE ENGINEERS
Land Surveying | Civil Engineering
Landscape Architecture
10505 N. College Avenue
Indianapolis, Indiana 46280
weihe.net
317 | 846 - 6611
800 | 452 - 6408
317 | 843 - 0546 *fax*
ALLAN H. WEIHE, P.E., L.S. - FOUNDER

REVISIONS AND ISSUES	DATE	BY
SUBMITTED FOR COUNTY SURVEYOR REVIEW	10.16.2015	BJS
ISSUED FOR TAC REVIEW	01.29.2016	BJS

PROJECT NO.: W15.0316
DWG. NAME: w15316-C801 utl det.dwg
DESIGNED BY: RJW
DRAWN BY: RJW
CHECKED BY: BJS
DATE: 01.29.2016

STEVEN SCOTT RUCKER P.E. 11300279

PREPARED FOR: Culver's of WESTFIELD

17651 SUN PARK DRIVE, WESTFIELD, IN 46074

UTILITY DETAILS

Part of SW/4 Section 36, Township 19 North, Range 3 East, Washington Township, Hamilton County, Indiana

SHEET NO.
C802

PROJECT NO.
W15.0316

LOCATION: W:\2015\w15316\Engineering\design\cons\w15316-C801 utl det.dwg
LAYOUT: C802
DATE/TIME: January 28, 2016 - 2:45pm
PLOTTED BY: schaefb

CITIZENS WATER
STANDARD PRACTICE **A**

REVISION DATE: 6/8/2009 ISSUE DATE: 6/8/2009

WATER AND SEWER MAIN SEPARATION DETAIL

NOTE:
WATER MAIN AND SANITARY SEWERS SHALL BE PLACED IN SEPARATE TRENCHES.

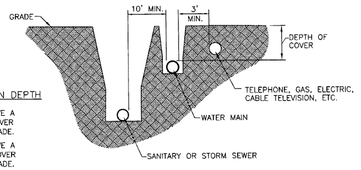

TYPICAL WATER MAIN DEPTH

1. ALL PIPE SHALL HAVE A MINIMUM OF 54" COVER BELOW FINISHED GRADE.
2. ALL PIPE SHALL HAVE A MAXIMUM OF 72" COVER BELOW FINISHED GRADE.

WATER MAIN LAYING PARALLEL TO SEWER
SECTION VIEW

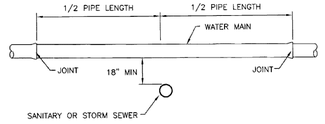

WATER MAIN CROSSING SEWER
SECTION VIEW

APPENDIX G-1

CITIZENS WATER
STANDARD PRACTICE **A.1**

REVISION DATE: ISSUE DATE: 7/17/2013

WATER MAIN AND SERVICE BACKFILL REQUIREMENTS

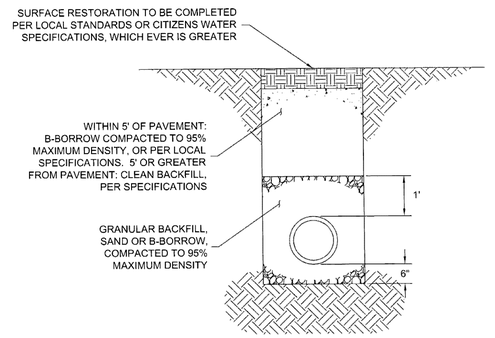

SCALE: NTS

NOTE:
COMPACTED BACKFILL IN LIFTS OF 12" MAXIMUM. TRENCH EXCAVATION SHALL CONFORM TO LOCAL STANDARDS.

APPENDIX G-2

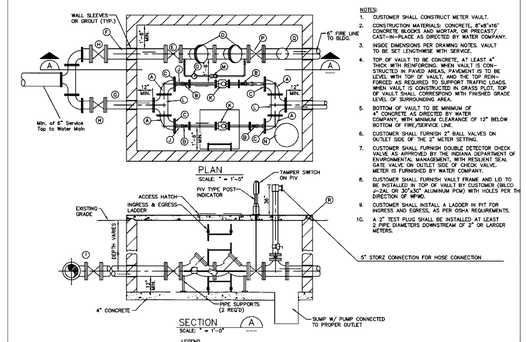

NOTES:
1. CUSTOMER SHALL CONSTRUCT METER VAULT.
2. CONSTRUCTION MATERIALS: CONCRETE, 8"x8"x16" CONCRETE BLOCKS AND MORTAR, OR PRECAST/ CAST-IN-PLACE AS DIRECTED BY WATER COMPANY.
3. INSIDE DIMENSIONS PER DRAWING NOTES. VAULT TO BE SET LENGTHWISE WITH SERVICE.
4. TOP OF VAULT TO BE CONCRETE, AT LEAST 4" THICK WITH REINFORCING. WHEN VAULT IS CON-STRUCTED IN PAVED AREA, TOP OF VAULT SHALL BE LEVEL WITH TOP OF VAULT, AND THE TOP REIN-FORCED AS REQUIRED TO SUPPORT TRAFFIC LOADS. WHEN VAULT IS CONSTRUCTED IN GRASS PLOT, TOP OF VAULT SHALL CORRESPOND WITH FINISHED GRADE LEVEL OF SURROUNDING AREA.
5. BOTTOM OF VAULT TO BE MINIMUM OF 12" BELOW BOTTOM OF METER, OR AS REQUIRED BY COMPANY, WITH MINIMUM CLEARANCE OF 12" BELOW BOTTOM OF FIRE/SERVICE LINE.
6. CUSTOMER SHALL FURNISH 2" BALL VALVES ON OUTLET SIDE OF THE 2" METER SETTING.
7. CUSTOMER SHALL FURNISH DOUBLE DETECTOR CHECK VALVE AS APPROVED BY THE INDIANA DEPARTMENT OF ENVIRONMENTAL MANAGEMENT, WITH RESILIENT SEAL GATE VALVE ON OUTLET SIDE OF CHECK VALVE. METER IS FURNISHED BY WATER COMPANY.
8. CUSTOMER SHALL FURNISH VAULT FRAME AND LID TO BE INSTALLED IN TOP OF VAULT BY CUSTOMER (SLIDE J-24L OR 30"x30" ALUMINUM PCW) WITH HOLES PER DIRECTION OF WPWD.
9. CUSTOMER SHALL INSTALL A LADDER IN PIT FOR INGRESS AND EGRESS, AS PER OSHA REQUIREMENTS.
10. A 2" TEST PLUG SHALL BE INSTALLED AT LEAST 2 PIPE DIAMETERS DOWNSTREAM OF 2" OR LARGER METERS.

LEGEND

A	90° FLANGED BEND	H	MECHANICAL JOINT GATE VALVE & BOX
B	BALL VALVE W/ FLANGED END	I	TAPPING SLEEVE W/ TAPPING VALVE & BOX
C	REDUCING FLANGE	J	LOK-I-PAK
D	DOUBLE DETECTOR CHECK VALVE ASSEMBLY	K	TURBINE METER – FLANGED BOTH ENDS (BY UTILITY)
E	FLANGED DS & Y VALVE	L	FLANGED TEE
F	FIRE LINE	M	DOUBLE CHECK VALVE
G	DOMESTIC SERVICE	N	SUMP WITH PUMP
		O	3/4" X 5/8" METER
		P	POST INDICATOR VALVE
		Q	FIRE DEPARTMENT CONNECTION
		R	O-RING GASKETED JOINT W/ LAYERS OF KENTSEAL MASTIC

STANDARD FIRE SERVICE & METER VAULT

CITY OF Westfield INDIANA

NEIL B. VANDERGRIFF REGISTERED NO. 10800092 STATE OF INDIANA PROFESSIONAL ENGINEER

TOWN OF WESTFIELD, INDIANA

7/15/08
DATE

FIGURE W-13

CITIZENS WATER
STANDARD PRACTICE **C**

REVISION DATE: 1/26/2015 ISSUE DATE: 6/8/2009

STANDARD HYDRANT SETTING FOR 6" & 8" WATER MAIN SIZES

NOTES:
1. FOR INSTALLATION ON 6" AND 8" DISTRIBUTION MAINS IN CITIZENS WATER TERRITORY.
2. HYDRANTS IN CITIZENS WESTFIELD TERRITORY SHALL HAVE A VALVE. SEE STANDARD PRACTICE B
3. ALL HYDRANTS SHALL BE RESTRAINED TO THE HYDRANT TEE WITH DUCTILE IRON BRANCH PIPING ENCASED IN POLYETHYLENE WRAP.
4. SWIVEL 90° BEND MAY BE USED TO INSTALL HYDRANT IN GRASS STRIP BETWEEN CURB & SIDEWALK
5. HYDRANTS WILL BE MARKED OUT OF SERVICE UNTIL THE INSPECTOR HAS PLACED THE MAIN IN SERVICE. HYDRANTS CAN BE MARKED OUT OF SERVICE USING A MANUFACTURED "OUT OF SERVICE" SIGN OR BY RENDERING THE HYDRANT INACCESSIBLE.

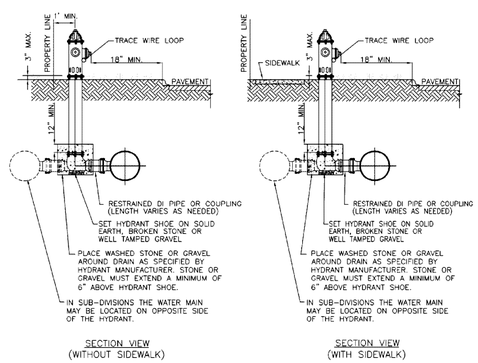

SECTION VIEW
(WITHOUT SIDEWALK)

SECTION VIEW
(WITH SIDEWALK)

APPENDIX C-4

CITIZENS WATER
STANDARD PRACTICE **F**

REVISION DATE: 4/17/2008 ISSUE DATE: 6/8/2009

TYPICAL VALVE PLACEMENT

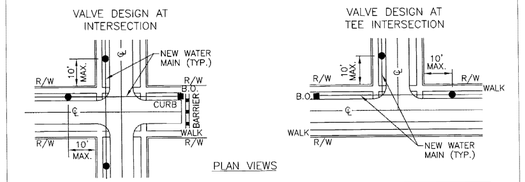

PLAN VIEWS

CONTINUOUS RUNS
VALVE SEPARATION: 6" THROUGH 12" VALVES, INSTALLATION EVERY 1000' TO 1200'
16" THROUGH 24" VALVES, INSTALLATION EVERY 1200' TO 1800'
30" OR LARGER VALVES, MAXIMUM 1800'
FOR LARGER MAINS THE VALVE SEPARATION MAY BE REDUCED WITHIN A DEVELOPMENT, AS APPROVED BY THE UTILITY.

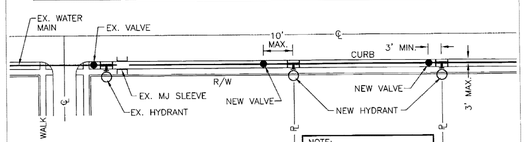

PLAN VIEW

NOTE:
ALL VALVES ARE TO BE INSTALLED WITHIN 10' OF AN INTERSECTION OR NEAR A FIRE HYDRANT.

NOTE:
SEE SEC. 2.03-C OF THE MAIN INSTALLATION STANDARDS FOR VALVE INSTALLATION INFORMATION.

ALL VALVES IN THE COMPANY'S DISTRIBUTION SYSTEM SHALL OPEN IN A CLOCKWISE ROTATION.

APPENDIX G-7

* ALL DETAILS SHOWN ON THIS SHEET WERE PROVIDED BY CITIZENS ENERGY GROUP

Know what's **below.** **Call** before you dig.
Within Indiana Call 811 or 800-382-5544
24 Hours a Day, 7 Days a Week.
PER INDIANA STATE LAW IC 8-1-26, IT IS AGAINST THE LAW TO EXCAVATE WITHOUT NOTIFYING THE UNDERGROUND LOCATION SERVICE TWO (2) WORKING DAYS BEFORE COMMENCING WORK.

10505 N. College Avenue
Indianapolis, Indiana 46280
weihe.net
317 | 846 - 6611
800 | 452 - 6408
317 | 843 - 0546 *fax*
ALLAN H. WEIHE, P.E., L.S. - FOUNDER

WEIHE ENGINEERS
Land Surveying | Civil Engineering
Landscape Architecture

PROJECT NO.	W15.0316
DWG. NAME	w15316-C801 utl det.dwg
DESIGNED BY:	RJW
DRAWN BY:	RJW
CHECKED BY:	BJS
DATE:	01.29.2016

REVISIONS / ISSUES	DATE	BY
SUBMITTED FOR COUNTY SURVEYOR REVIEW	10.15.2015	BJS
ISSUED FOR TAC REVIEW	01.29.2016	BJS

STEVEN SCOTT RUCKER P.E. 11300279

PREPARED FOR: Centuri

of WESTFIELD
17651 SUN PARK DRIVE, WESTFIELD, IN 46074

UTILITY DETAILS

Part of SW/4, Section 36, Township 19 North, Range 3 East, Washington Township, Hamilton County, Indiana

SHEET NO.
C803

PROJECT NO.
W15.0316

LOCATION: H:\2015\w15316\Engineering\design\current\w15316 - C801 utl det.dwg
USER: bschaefle
DATE/TIME: January 28, 2016 - 2:46pm
PLOTTED BY: bschaefle

WESTFIELD STANDARD – 2006
SECTION 01001 – GENERAL REQUIREMENTS

1.1 DEFINITIONS

A. Whenever used in these specifications the following terms have the meanings indicated which are applicable to both the singular and plural thereof:

1. Town – The Town of Westfield, represented by the Town Council.
2. Public Works Department – An agency of the Town which manages public infrastructure within its jurisdiction.
3. Owner – Person or firm having control of the development site, and management of the project.
4. Contractor – The person, firm or corporation with whom the developer has entered into an agreement for construction of the project.
5. Project – The total construction of which the work to be provided may be the whole or part.
6. Work – The entire completed construction or the various separately identified parts thereof required to be furnished.

1.2 WORK TO BE PERFORMED

Work to be performed shall be in accordance with drawings and specifications approved by the Town.

1.3 SAFETY AND HEALTH REGULATIONS FOR CONSTRUCTION

The Contractor shall be solely responsible for all obligations prescribed as employer obligations under Chapter XVII of Title 29, Code of Federal Regulations, Part 1926, otherwise known as "Safety and Health Regulations for Construction."

1.4 DISCOVERY OF HAZARDOUS MATERIAL

If, during the course of this work, the existence of hazardous material, including asbestos containing material, is observed in the work area, the Contractor shall immediately notify the Owner in writing. The Contractor shall not perform any work pertinent to the hazardous material prior to receipt of special instructions from the Owner and the Town of Westfield. Asbestos containing material includes transite pipe.

1.5 EASEMENTS

A. The Developer will obtain utility and/or drainage easements over and through certain private lands for the construction and rehabilitation. The width or limits of such rights-of-way will be defined by the Town before the work or construction shall begin. If the methods of construction employed by the Contractor are such as to require the use of land beyond the limits obtained, he shall make his own agreements with the property owners affected for the use of such additional land.

B. In all such utility and/or drainage easements, the Contractor shall be required to carefully remove the property owner's fences, or other obstacles to the construction procedure, and replace the same after the work is installed. The backfilling shall be to the grade of the existing ground level or to the grade as established by the property owner in the event the property owner permits the deposit of excess material upon such land.

C. The cost of all such restoration of property shall be included in this work.

1.6 OPERATIONS WITHIN RIGHT-OF-WAY

In public thoroughfares, all operations of the Contractor, including those of temporary nature, must be confined within the applicable right-of-way limits after having obtained approval of the Town or other Local Governing Entity. If the methods of the construction employed by the Contractor are such as to require the use of land beyond the public thoroughfares, he shall make his own agreements with the property owners affected for the use of such additional.

1.7 PERMITS

A. The Developer will obtain permits which relate to the completed facilities. Permits obtained by the Developer include permits from the following:

1. Town of Westfield
2. Department of Natural Resources
3. U.S. Army Corps of Engineers
4. Indiana Department of Fire Prevention & Building Safety
5. Indiana Department of Transportation
6. Railroads
7. Hamilton County Surveyor's Office
8. Hamilton County Highway Dept.

B. The Contractor shall obtain permits which relate to construction procedures.

1. All necessary permits or licenses required from the State, County, or Town or other Local Governing Entity in connection with construction procedures under or along existing highways shall be obtained by and at the expense of the Contractor. The construction shall be performed by the Contractor in full accordance with any and all requirements of the State Highway Commission, County Road Commission, WPWD, or other Local Governing Entity including those applying to barricades, watchmen, guarding, lighting, storage of supplies, equipment and excavated materials, method of backfilling, final grading, replacement of pavement or road surface, and all other conditions or requirements which may be stipulated by the State Highway Commission, County Road Commission, or WPWD, whether specifically shown on the drawings or mentioned in the specification.

1.8 MAINTAINING TRAFFIC

A. Before closing any thoroughfare, the Contractor shall notify and, if necessary, obtain a permit or permits from the duly constituted public authority having jurisdiction, state, county, city/town. The Contractor will be responsible for notifying the local school corporation, all public safety agencies and the Town. The Contractor shall provide the WPWD a detour route plan for review prior to road closure.

B. The Contractor shall notify the Town of his intention to close a particular street 72 hours in advance of the proposed closing. The Contractor shall place all proper detour signs and barricades prior to the actual street closing.

C. During the construction, the Contractor shall be responsible for maintaining and protecting the pedestrian and vehicular traffic at all times on all streets involved and providing access to all residential and commercial establishments adjacent to the construction area. The Contractor shall furnish and maintain signage, barricades, flares, etc., in accordance with Indiana Manual on Uniform Traffic Control Devices. The signage, barricades, etc., must be in good condition.

D. The Contractor shall conduct his work in such manner as not to unduly or unnecessarily restrict or impede normal traffic through the streets of the community. Insofar as it is practicable, do not locate excavated material and spoil banks in such manner as to obstruct traffic. Keep the traveled way of all street, roads, and alleys clear and unobstructed insofar as is possible. Do not use streets, roads, or alleys for the storage of construction materials, equipment supplies, or excavated earth, except when and where necessary. If required by duly constituted public authority, the Contractor shall, at his own expense, construct bridges or other temporary crossing structures over trenches so as not to unduly restrict traffic. Such structures shall be of adequate strength and proper construction and shall be maintained by the Contractor in such manner as not to constitute an undue traffic hazard. Private driveways shall not be closed, except when and where necessary, and then only upon due advance notice to the WPWD and homeowner for the shortest practicable period of time, consistent with efficient and expeditious construction. The Contractor shall be liable for any damage to persons or property resulting from his work.

E. Streets in which excavation has occurred shall be temporarily restored to receive traffic as soon as possible. Permission to close additional streets shall be denied the Contractor if, in the opinion of The Town or the Engineer, the restoration on streets where excavation has occurred has not progressed satisfactorily.

1.9 WALKS AND PASSAGEWAYS

The Contractor, when required, shall make provisions at cross streets for the free passage of vehicles and foot passengers, either by bridging or otherwise. Do not obstruct the sidewalks, gutters, or streets, or prevent in any manner the flow of water in streets. Use all proper and necessary means to permit the free passage of surface water along the gutters. The Contractor shall immediately cart away all offensive matter, exercising such precaution as may be directed by the Engineer. All material excavated shall be so disposed of as to inconvenience the public and adjacent tenants as little as possible and to prevent injury to trees, sidewalks, fences, and adjacent property of all kinds. The Contractor may be required to erect suitable barriers to prevent such inconvenience or injury.

1.10 WARNING LIGHTS AND ARROW BOARDS

The Contractor shall place sufficient warning lights and arrow boards on or near the work and keep them illuminated during periods of construction and reduced visibility (from twilight in the evening until sunrise) and shall be held responsible for any damages that any party or the Owner may sustain in consequences of neglecting the necessary precaution in prosecuting this work.

1.11 UTILITIES

A. Temporary Removal: All existing Town utility systems which conflict with the construction of the work herein which can be temporarily removed and replaced shall be accomplished at the expense of the Developer or Contractor with approval from the Westfield Public Works Department. Work shall be done by the WPWD unless the WPWD approves in writing that the work may be done by the Developer or Contractor.

B. Permanent Relocation of Utilities: Water mains, storm sewer inlets, gas lines, wire lines, service connections, water and gas meter boxes, water and gas valve boxes, light and traffic standards, cable ways, signals, and other utility appurtenances located in the public right-of-way which would permanently interfere with the proposed Town improvements will be moved by the utility involved and paid for by the Developer.

1.12 SUBMITTALS – CERTIFICATE OF COMPLIANCE

The Developer shall upon request of the Town Council or the Westfield Public Works Department, submit to the WPWD a Certificate of Compliance from the manufacturer and/or supplier of each and every specified material or manufactured equipment item. The Certificate shall state that the material or the item of equipment to be furnished has been manufactured with materials in accordance with the applicable sections of all required codes, specifications, and standards as required by the specifications.

1.13 MANUFACTURER'S SERVICE TIME

A. When a lift station or other equipment is to be furnished by the Developer or Contractor and maintained by the WPWD, service by the manufacturer is required to be furnished as part of the work and shall be at the Contractor's expense.

B. The service provided shall be by a qualified representative to check the completed installation, place the equipment in operation, and instruct the Town's operators in the operation and maintenance procedures.

C. The services shall further demonstrate to the Town's complete satisfaction that the equipment will satisfactorily perform the functions for which it has been installed.

1.14 RECORD DRAWINGS

The Developer will be responsible for preparation and submittal of digital as-builts/record drawings as required by the requirements set forth in the Town's Digital As-built requirements. A copy of the most recent requirements are available on the Town's website at http://www.westfield.in.gov/egov/docs/1157135335_990447.pdf. Additional information can also be received from the WPWD GIS Division.

END OF SECTION 01001

WESTFIELD STANDARD – 2006
SECTION 02101 – TEMPORARY EROSION AND DUST CONTROL

PART 1 – GENERAL

1.1 DESCRIPTION

PLEASE SEE CHAPTER 600 OF THE TOWN OF WESTFIELD STORMWATER MANUAL.

WESTFIELD STANDARD – 2006
SECTION 02222 – EARTHWORK FOR UTILITIES

PART 1 – GENERAL

1.1 DESCRIPTION

A. Scope: Specifications for the stripping of topsoil and vegetation, excavation, trenching, bedding, filling, backfilling, compaction, and related work in connection with the installation of water mains, gravity sanitary sewers, storm sewers, and force mains are included in this Section.

B. Definitions

1. Excavation: Removal of earth and rock to form a trench for the installation of a water main, gravity sanitary sewer, storm sewer, or force main.

2. Earth: Unconsolidated material in the crust of the Earth derived by weathering and erosion. Earth includes:

a. Materials of both inorganic and organic origin;
b. Boulders less than 1/3 cubic yard in volume, gravel, sand, silt, and clay;
c. Materials which can be excavated with a backhoe, trenching machine, drag line, clam shell, bulldozer, highlift, or similar excavating equipment without the use of explosives, rock rippers, rock hammers, or jack hammers.

3. Rock: A natural aggregate of mineral particles connected by strong and permanent cohesive forces. Rock includes:

a. Limestone, sandstone, dolomite, granite, marble, and lava;
b. Boulders 1/3 cubic yard or more in volume;
c. Materials which cannot be excavated by equipment which is used to remove earth overburden without the use of explosives, rock rippers, rock hammers, or jack hammers;
d. Materials which cannot be excavated with a backhoe, trenching machine, drag line, clam shell, bulldozer, highlift, or similar excavating equipment without the use of explosives, rock rippers, rock hammers, or jack hammers.

4. Undercutting: Excavation of rock and unsuitable earth below the bottom of the pipe or conduit to be installed in the trench.

5. Subgrade: Undisturbed bottom of a trench.

6. Bedding: Earth placed in trench to support pipe and conduit.

7. Backfill and Fill: Earth placed in trench from the top of bedding to finished grade, or to subbase of pavement.

8. Topsoil: Earth containing sufficient organic materials to support the growth of grass.

1.2 SITE CONDITIONS

Existing storm sewers, sanitary sewers, water mains, gas mains, electric ducts, telephone ducts, steam mains and other under-ground structures, lines, and their house connections are to been shown on the plans according to the best available information. The exact location and protection of these facilities and structures, their support and maintenance in operation during construction (in cooperation with the proper authorities), is the responsibility of the Contractor.

PART 2 – PRODUCTS

2.1 BEDDING

A. Class I bedding shall be angular 6 to 12 mm (1/4 to 1/2 inch) graded stone, coral, slag, cinders, crushed stone or crushed shells.

B. Class II bedding shall be coarse sands and gravels with maximum particle size of 20 mm (3/4 inch). Class II bedding includes variously graded sands and gravels containing small percentage of fines generally granular and non-cohesive, either wet or dry. Soil types GW (well-graded gravel), SW (well-graded sand), and SP (pea gravel and/or crushed stone mixed with sand) are included in this class.

2.2 BACKFILL

A. General: Backfill shall be earth of such gradation and moisture content that the soil will compact to the specified density and remain stable. Unsuitable materials shall not be used.

B. Cover Material: Pipe cover material shall consist of durable particles ranging in size from fine to coarse (No. 200 to 1 inch) in size in a substantially uniform combination. Unwashed bank run sand and crushed bank-run gravel will be considered generally acceptable. Bedding material may be used for cover material.

C. Granular Backfill – Special Backfill: Granular backfill, when indicated on the plans or as ordered by the Engineer, shall be used for backfilling providing it meets the following soils classified by the Unified Soils Classification System ASTM D-2487 or the Indiana State Highway Standard Specification Section 211 – Special Fill and Backfill ("B" Borrow).

Group Symbols	Typical Names
GW	Well-graded gravels and gravel-sand mixtures, little or no fines
GP	Poorly graded gravels and gravel-sand mixtures, little or no fines
SW	Well-graded sands and gravelly sands, little or no fines
SP	Poorly graded sands and gravelly sands, little or no fines

D. Suitable Excavated Materials as Backfill: Excavated material shall be used when earth backfill is specified on the plans or where granular backfill or flowable fill is not specifically specified, provided that such material consists of loam, clay, or other materials which, are suitable for backfilling. Unsuitable backfill or frozen backfill material shall not be used. Suitable backfill shall be the following soils, classified by the Unified Soil Classification System, ASTM D-2487:

Group Symbols	Typical Names
GW	Well-graded gravels and gravel-sand mixtures, little or no fines
GP	Poorly graded gravels and gravel-sand mixtures, little or no fines
GM	Silty gravels, gravel-sand-silt mixtures
GC	Clayey gravels, gravel-sand-clay mixtures
SW	Well-graded sands and gravelly sands, little or no fines
SP	Poorly graded sands and gravelly sands, little or no fines
SM	Silty sands, sand-silt mixtures
SC	Clayey sands, sand-clay mixtures
ML	Inorganic silts, very fine sands, rock flour, silty or clayey fine sands
CL	Inorganic clays of low to medium plasticity, gravelly clays, sandy clays, silty clays, lean clays

E. Unsuitable Materials: Materials which are unsuitable for backfill include stones greater than 8 inches in their largest dimension, pavement, rubbish, debris, wood, metal, plastic, and the following soils, classified by the Unified Soil Classification System, ASTM D-2487:

Group Symbols	Typical Names
OL	Organic silts and organic silty clays of low plasticity
MH	Inorganic silts, micaceous or diatomaceous fine sands or silts, elastic siltsties
CH	Inorganic clays of high plasticity, fat clays
OH	Organic clays of medium to high plasticity
PT	Peat, muck, and other highly organic soils

F. Concrete Backfill: Concrete used for backfill around sewers, water mains, or other utility piping shall be Class B concrete.

G. Cellular Concrete: Light weight Cellular concrete may be used for filling of abandoned sewers as a grouting mixture for filling voids and as a substitute for backfill concrete in tunnels or casing pipes. The cellular concrete shall be produced by blending preformed foam with cement-sand grout slurry to produce a concrete having a fresh weight per cubic foot of not less than 75 pounds.

H. Flowable Fill

1. Flowable fill shall be in accordance with INDOTSS Section 213 and as specified herein.
   a. Unconfined Compressive Strength (28 day): 50–150 psi
   b. Flow Test – Diameter of Spread: 8 inches ± 1 inch

2. Design: Mix design shall be required to be submitted and approved by the Town of Westfield Public Works Department or designated engineer. A trial batch demonstration may be required. The mix design shall include a list of all ingredients, the source of all materials, the gradation of all aggregates, the names of all admixtures and dosage rates, and the batch weights. Except for adjustments to compensate for routine moisture fluctuations, minor mix design changes after the trial batch verification shall be documented and justified prior to implementation by the Contractor. A change in the source of materials or addition or deletion of admixtures or cementitious materials will require the mix design to be re-submitted for approval. The Contractor shall be required to provide test data from a laboratory which shows that the proposed mix design is in accordance with the requirements listed in this specification.

PART 3 – EXECUTION

3.1 EXISTING UTILITIES, STRUCTURES, AND PROPERTY

A. All poles, fences, sewer, gas, water or other pipes, wires, conduits and manholes, railroad tracks, buildings, structures and property along the routes of water mains, force mains, and sewers shall be supported and protected from damage by the Contractor.

B. Movable items such as mail boxes may be temporarily relocated during construction. Place movable items in their original location immediately after backfilling is completed, unless otherwise shown on the drawings. Replace movable items which are damaged during construction.

C. The Contractor shall proceed with caution in the excavation and preparation of trenches so that the exact location of underground utilities and structures, both known and unknown, may be determined. The Contractor shall be responsible for the repair of utilities and structures when broken or otherwise damaged.

D. Whenever, in the opinion of the Westfield Public Works Department, it is necessary to explore and excavate to determine the location of underground structures, the Contractor shall make explorations and excavations for such purpose.

E. Wherever sewer, gas, water, or other pipes or conduits cross the trench, the Contractor shall support said pipes and conduits without damage to them. The manner of supporting such pipes, etc., shall be subject to the approval of the owner of the utility involved.

F. When utility lines that have to be removed or relocated are encountered within the areas of operations, the Contractor shall notify the Westfield Public Works Department or the owner of that utility in ample time for the necessary measure to be taken to prevent interruption of the service.

G. The Contractor shall so conduct the work that no equipment, material, or debris will be placed or allowed to fall upon private property in the vicinity of the work unless he shall have first obtained the property owner's written consent thereto and shall have shown said written consent to the Town.

H. All excavated material shall be piled in a manner that will avoid obstructing sidewalks and driveways. Hydrants under pressure, valve pit covers, valve boxes, curb stop boxes, fire and police call boxes, or other utility controls shall be left unobstructed and accessible until the work is completed. Gutters shall be kept clear or other satisfactory provisions made for street drainage, and natural watercourses shall not be obstructed.

I. All streets, alleys, pavements, parkways, and private property shall be thoroughly cleaned of all surplus materials, earth, and rubbish placed thereon by the Contractor.

3.2 CLEARING

A. Clear and remove logs, stumps, brush, vegetation, rubbish, and other perishable matter from the project site as required to perform work.

B. Do not remove or damage trees that do not interfere with the work. Completely remove trees required to be removed, including stumps and roots. Properly treat damaged trees which can be saved.

C. Debris from the tree removal, including trunk, branches, leaves, roots and stumps, shall not be buried or burned on the job site, but must be completely hauled away and disposed of at the Developer's or Contractor's expense.

D. Clear and remove trees, logs, stumps, brush, vegetation, rubbish, and other perishable matter from the existing and proposed right-of-way.

3.3 STRIPPING AND STOCKPILING OF TOPSOIL

A. Strip topsoil and vegetation from the excavated areas. Clean topsoil may be stockpiled for reuse as the upper 6 inches of the areas to be seeded.

3.4 PAVEMENT AND WALK REMOVAL

A. Remove existing pavement and walks from the excavated areas. Remove excavated asphaltic and concrete materials from the job site as these materials are excavated.

B. The width of pavement removed along the normal trench for the installation of pipe and structures shall not be less than two (2) feet on either side of the trench and be in accordance with Standard Detail P-18. Remove all existing pavement when excavation requires the removal of 75% or more of the total existing pavement width. If over 50% of one travel lane is disturbed, restoration must be extended to the centerline of the roadway.
C. Remove walks completely when excavation is along the length of a walk and requires the removal of part of the walk. Remove walks to existing joints in the walks when excavation crosses walks. If there are no joints in an existing walk, the width of walk removed shall not exceed the width of the trench by more than 12 inches on each side of the trench.

D. Use methods to remove pavement and walks that will assure the breaking or cutting of pavement and walks along straight lines. The face of the remaining pavement and walk surfaces shall be approximately vertical.

E. All concrete sidewalk andasphalt multiuse path removed must be replaced per the WPWD Standars Section 02500 and Standard Details P-10, P-11, and P-16. All restoration work is subject to inspection by WPWD.

3.5 EXCAVATING

A. General: After stripping of topsoil and vegetation, perform excavations of every description regardless of material encountered within the grading limits of the project to lines and grades as indicated on the drawings or as otherwise specified.

1. Materials removed below the depths indicated shall be replaced to the indicated excavation grade with satisfactory bedding materials placed and compacted.

B. Dewatering: Keep excavations free from water until the water mains, force mains, sewers, structures, and appurtenances to be constructed in the excavations are completed and will safely withstand forces from water. Provide sufficient dewatering equipment and make satisfactory arrangements for the disposal of the water without undue interference with other work, damage to property, or damage to the environment.

1. Operate dewatering equipment ahead of pipe laying and keep the water level below the pipe invert until the pipe is secured by backfill.

C. Trenching: Trees, boulders, and other surface encumbrances, located so as to create a hazard to employees involved in excavation work or in the vicinity thereof at any time during operations, shall be removed or made safe before excavating is begun.

1. Do not open more than 100 feet of trench in advance of the installed pipe, unless otherwise directed or permitted by the Westfield Public Works Department or designee. Excavate the trench within 6 inches of full depth for a distance of at least 30 feet in advance of the pipe laying, unless otherwise directed or permitted.

2. Contractor shall be responsible for the determination of the angle of repose of the soil in which the trenching is to be done. Excavate all slopes to at least the angle of repose except for areas where solid rock allows for line drilling or presplitting, or where shoring or trench box is to be used.

3. Sides, slopes, and faces of all excavations shall meet accepted engineering requirements by scaling, benching, barricading, rock bolting, wire meshing, or other equally effective means. Give special attention to slopes which may be adversely affected by weather or moisture content.

4. Flatten the trench sides when an excavation has water conditions, silty materials, loose boulders, and areas where erosion, deep frost action, and slide planes appear.

5. Shoring, sheeting, trench box, or other means shall be used to support sides of trenches in hard or compact soil when the trench is more than 5 feet in depth and 8 feet or more in length. Sides of trenches shall include embankments adjacent to trenches. In lieu of shoring, the sides of the trench above the 5-foot level may be sloped to preclude collapse, but shall not be steeper than a 1-foot rise to each 1/2-foot horizontal. Provide a bench of 4 feet minimum at the toe of the sloped portion of the trench wall when the outside diameter of the pipe to be installed is greater than 6 feet.

6. Use diversion ditches, dikes, or other suitable means to prevent surface water from entering an excavation and to provide adequate drainage of the area adjacent to the excavation. Do not allow water to accumulate in an excavation. If possible, the grade should be away from the excavation.

7. Excavations shall be inspected by a competent Contractor's representative after every rainstorm or other hazard-increasing occurrence, and the protection against slides and cave-ins shall be increased, if necessary.

8. Do not store excavated or other material nearer than 4 feet from the edge of any excavation. Store and retain materials as to prevent materials from falling or sliding back into the excavation. Install substantial stop log or barricades when mobile equipment is utilized or allowed adjacent to excavations.

9. The width of trenches in earth for water main pipe, sewers, basin connections, house connections, and other drains up to and including 33 inches in internal diameter shall provide a clearance of not less than 8 inches or more than 10 inches on each side of the pipe. Trenches for pipe larger than 33 inches in internal diameter shall provide a clearance of not less than 10 inches or more than 14 inches on each side of the pipe.

10. The maximum clear width of trenches in earth for manholes shall be the greatest external width of the structure plus the space necessary for the construction and removal of the forms and construction of masonry work.

11. The design of the water main, force main, and/or sewer pipe and structures is predicated upon the width of trench specified in this Article. The Contractor shall be responsible for the provision and installation, at his own expense, of such remedial measures as may be directed by the Westfield Public Works Department or designee; should the trench width limits specified in this Article be exceeded.

12. Test the air in excavations in locations where oxygen deficiency or gaseous conditions are possible. Establish controls to assure acceptable atmospheric conditions. Provide adequate ventilation and eliminate sources of ignition when flammable gases are present. Attended emergency rescue equipment, such as breathing apparatus, a safety harness and line, and basket stretcher, shall be readily available where adverse atmospheric conditions may exist or develop in an excavation.

13. Provide walkways or bridges with guardrails where employees or equipment are required or permitted to cross over excavations.

14. Provide ladders where employees are required to be in trenches 4 feet deep or more. Ladders shall extend from the floor of the trench to at least 3 feet above the top of the excavation. Locate ladders to provide means of exit without more than 25 feet of lateral travel.

15. Provide adequate barriers and physically protect all remotely located excavations. Barricade or cover all wells, pits, shafts, and similar excavations. Backfill temporary wells, pits, shafts, and similar excavations upon completion of exploration and similar operations.

D. Quicksand: Carry on the work with utmost vigor and proceed with the work expeditiously when running sand, quicksand, or other bad or treacherous ground is encountered. Install bedding to support the pipe as directed.

E. Blasting: Removal of rock from the excavation may be facilitated by the use of controlled explosives.

1. Blasting supervision and Blasting Monitoring and Control Programs shall meet the requirements of this Section.

2. Storage procedures for explosives shall be developed by the Contractor and submitted to the Engineer before explosives are brought to the job site.

3.6 SHEETING

A. The Contractor shall be responsible for construction means, methods, techniques, and procedures, and for providing a safe place for the performance of the work by the Contractor, Subcontractors, suppliers and their employees, and for access use, work, or occupancy by all authorized persons.

B. The Contractor shall be solely responsible for all obligations prescribed as employer obligations under Chapter XVII of Title 29, Code of Federal Regulations, Part 1926, otherwise known as "Safety and Health Regulations for Construction."

C. Adequate supporting systems, such as sheeting, shoring, piling, cribbing, and bracing shall be furnished and installed by the Contractor as required to protect existing buildings, utilities, and property from damage during the progress of the work.

3.7 STORAGE AND REMOVAL OF EXCAVATED MATERIAL

A. Suitable excavated material required for filling and backfilling operations may be stockpiled in on-site locations, at the discretion of the Westfield Public Works Department or designee, until the material is ready to be placed.

B. Remove unsuitable materials from the job site as unsuitable materials are excavated. Remove surplus suitable materials from the job site as trenches are backfilled.

3.8 TEMPORARY PLUGS

Prevent foreign matter from entering pipe while it is being installed. Do not place debris, tools, clothing, or other material in the pipe. Close the open ends of pipe by watertight plugs when pipe laying is not in progress. Remove any earth or other material that enters pipe, lateral pipe, or appurtenances through any open pipe end.

3.9 BACKFILLING WATER MAIN AND FORCE MAIN TRENCHES

A. Backfilling of water main and force main trenches shall meet the requirements of ANSI/AWWA C600, unless otherwise specified in this Section.

B. Do not backfill trenches and excavations until all utilities have been inspected by the Westfield Public Works Department or designee and until all underground utilities and piping systems are installed in accordance with the requirements of the specifications and the drawings. Required hydrostatic tests may be applied to the line either before or after the trench is backfilled, subject to approval of the Westfield Public Works Department or designee.

C. Place and tamp bedding and backfill in a manner which will not damage pipe coating, wrapping, or encasement.

D. Material from the trench subgrade to the centerline of the pipe shall be Class II bedding. Place bedding by hand or approved mechanical methods in layers of 8 inches loose depth. Compact bedding by hand tamping or with a power operated hand vibrating compactor. Deposit bedding in the trench for its full width on each side of the pipe simultaneously.

E. Place pipe cover material from the centerline of the pipe to 12 inches over the pipe. Compact pipe cover material to the density required to allow backfill over the pipe cover material to be compacted to the density specified in this Article.

3.11 MAINTAINING TRAFFIC

A. Before closing any thoroughfare, the Contractor shall notify and, if necessary, obtain a permit or permits from the duly constituted public authority having jurisdiction, state, county, or city/town, school corporation, and public safety agencies, which notice shall be given not less than 72 hours in advance of the time when it may be necessary in the process of construction to close such thoroughfare.

B. The Contractor shall notify the Town of his intention to close a particular street 72 hours in advance of hte proposed closing. The Contractor shall place all proper detour signs and barricades prior to the actual street closing.

C. During the construction, the Contractor shall be responsible for maintaining and protecting the pedestrian and vehicular traffic at all times on all streets involved and providing access to all residential and commercial establishments adjacent to the constuction area. The Contractor shall furnish and maintain signage, barricades, flares, etc., in accordance with the latest version of the Indiana Manual on Uniform Traffic Control Devices. The signage, barricades, etc., must be in good condition.

D. The Contractor shall conduct his work in such manner as not to unduly or unnecessarily restrict or impede normal traffic through the streets of the community. Insofar as it is practicable, excavated material and spoil banks shall not be located in such manner as to obstruct traffic; and the traveled way of all streets, roads, and alleys shall be kept clear and unobstructed insofar as is possible and shall not be used for the storage of construction materials, equipment, supplies, or excavated earth, except when and where necessary. If required by duly constituted public authority, the Contractor shall, at his own expense, construct bridges or other temporary crossing structures over trenches so as not to unduly restrict traffic. Such structures shall be of adequate strength and proper construction and shall be maintained by the Contractor in such manner as not to constitute an undue traffic hazard. Private driveways shall not be closed except when and where necessary, and then only upon due advance notice to the Engineer and for the shortest practicable period of time consistent with efficient and expeditious construction. The Contractor shall be liable for any damages to persons or property resulting from his work.

3.12 WALKS AND PASSAGEWAYS

The Contractor, when required, shall make provisions at cross streets for the free passage of vehicles and foot passengers, either by bridging or otherwise, and shall not obstruct the sidewalks, gutters, or streets, nor prevent in any manner the flow of water in the latter, but shall use all proper and necessary means to permit the free passage of surface water along the gutters. The Contractor shall immediately cart away all offensive matter, exercising such precaution as may be directed by Westfield Public Works Department or designee. All material excavated must be so disposed of as to inconvenience the public and adjacent tenants as little as possible and to prevent injury to trees, sidewalks, fences, and adjacent property of all kinds. The Contractor may be required to erect suitable barriers to prevent such inconvenience or injury.

3.13 WARNING LIGHTS

The Contractor shall place sufficient warning lights on or near the work and keep them illuminated during periods of reduced visibility (from twilight in the evening until sunrise) and will be held responsible for any damages that any party or the Town may sustain in consequences of neglecting the necessary precaution in prosecuting this work.

F. Do not use the following materials for backfill:

1. Unsuitable materials;
2. Frozen materials;
3. Materials which are too wet or too dry to be compacted to the densities specified in this Article.

G. Where the edge of the trench is within 5 feet of the existing roadway pavement, it shall be backfilled with Flowable Backfill. Where the trench is located within existing pavement or any trench specifically indicated on the drawings shall be backfilled with Flowable Backfill. Where the edge of the trench is within 5 feet or crosses a proposed roadway pavement, it shall be backfilled with Flowable Backfill. Place Flowable Backfill in lifts. In all areas, cuts and trenches shall be backfilled with Flowable backfill to within 1 ½" inches of the existing asphalt paved surface The remainder of the trench is to be filled with crushed stone and compacted in place, prior to opening the street to traffic. The Contractor shall add crushed stone and grade until sufficient settlement has taken place and final restoration is made.

3.10 BACKFILLING SANITARY SEWER AND STORM SEWER TRENCHES

A. Do not backfill trenches and excavations until all utilities have been inspected by the Westfield Public Works Department or designee and until all underground utilities and piping systems are installed in accordance with the requirements of the specifications and the drawings.

B. Place and tamp bedding and backfill in a manner which will not damage pipe coating, wrapping, or encasement.

C. Bedding procedures for sanitary sewers and storm sewers shall be as specified in manufacturers recommendation or WPWD specification. The more stringent specification shall apply.

D. If bedding does not cover the pipe, place pipe cover material from the top of bedding to 12 inches over the pipe. Compact pipe cover material to the density required to allow backfill over the pipe cover material to be compacted to the density specified in this Article.

E. Do not use the following materials for backfill:

1. Unsuitable materials;
2. Frozen materials;
3. Materials which are too wet or too dry to be compacted to the densities specified in this Article.

F. Where the edge of the trench is within 5 feet of or crosses the existing roadway pavement, it shall be backfilled with Flowable Backfill. Backfill any trench specifically indicated on the drawings with Flowable Backfill.

G. Trenches Not Requiring Special Backfill: Backfill trenches not requiring granular backfill with suitable excavated material. Place and compact backfill to produce an adequate foundation for the applicable paved or unpaved surface treatment. Fill and restore any settlement of the backfill. In paved areas, backfill shall be maintained to subbase elevation. In unpaved areas, backfill shall be mounded above finish grade to allow for settlement. Grade unpaved area to be restored 6 inches below finish grade after settlement of backfill and immediately before restoration of vegetated areas. Place 6 inches of topsoil over area to be restored.

H. Trenches in Traveled Pavements: All cuts and trenches in paved streets or other paved areas shall be backfilled with flowable fill material unless granular backfill is specifically approved by the Director of Public Works to within 12 inches of the street surface in grass areas or to the bottom of the pavement section.

3.14 CLEANUP AND MAINTENANCE

A. Cleanup the job site as backfilling is completed. Remove excess earth, rock, bedding, materials, and backfill materials. Remove unused piping materials, structure components, and appurtenances. Restore items moved, damaged, or destroyed during construction. Grade area to be restored. Leave backfill mounded over trenches which are not backfilled with Special Backfill. Cleanup and restoration specified in this paragraph shall be completed within 1,000 feet of excavation.

B. Restoration of grass, bushes, trees, and other plants shall be completed by Contractor to original condition or better condition.

C. Restoration of pavement and walks shall be specified in Section 02500, Paving and Surfacing. A temporary driving surface, such as crushed stone, shall be compacted in place in the trench area as backfilling is complete. Cold-mix asphalt patching material may be used as a temporary driving surface at the Contractor's option or when specifically called for in the plans or specifications. Temporary pavement shall not be more than 1,000 feet behind the excavation. When no existing pavement remains after excavation, a temporary compacted aggregate surfacing may be provided instead of the permanent pavement or a temporary cold-mix asphalt pavement.

D. Maintain the job site until the work has been completed and accepted. Fill trenches which settle when settlement is visible. Restore items damaged by construction or improper restoration. Keep dust conditions to minimum by the use of water.

END OF SECTION 02222
WESTFIELD STANDARD – 2006

WESTFIELD STANDARD – 2006
SECTION 02558 – IDENTIFICATION/LOCATION TAPE AND WIRE

PART 1 – GENERAL

1.1 SCOPE

A. Furnish and install identification and warning tape over the centerline of all buried piping. See Figure W-1 for detail.

B. Furnish and install location wire for all buried non-metallic piping. See Figure W-1 for detail.

PART 2 – PRODUCTS

2.1 IDENTIFICATION TAPE

A. Identification/Location Tape

1. Identification/location tape shall be manufactured of inert polyethylene so as to be highly resistant to alkalis, acids and other destructive agents found in soil, and shall have a minimum thickness of four mils. Tape width shall be a minimum of three inches and a maximum of six inches and shall have background color specified below, imprinted with black letters. Imprint shall be as specified below and shall repeat itself a minimum of once every two feet for entire length of tape.

2. Warning tape shall be as described above except no solid foil is required.

B. Tape background colors and imprints shall be as follows:

Imprint	Background Color
"Caution – Water Line Buried Below"	Blue
"Caution – Sanitary Force Main Buried Below"	Green

C. Identification tape shall be as follows:

1. For PVC Water Pipe: Terra Tape Sentry Line or approved equal.
2. For PVC Sanitary Force Main Pipe: Terre Tape Sentry Line or approved equal.

D. Products above are as manufactured by Reef Industries, Inc., Houston, Texas or equivalent manufacture.

2.2 LOCATOR WIRE

Locator wire shall be #10 solid copper wire.

PART 3 – EXECUTION

3.1 INSTALLATION OF IDENTIFICATION TAPE

A. Identification tape shall be installed over all buried piping in accordance with the manufacture's installation instructions and as specified herein.

B. Identification tape shall be installed one foot over centerline of pipe unless otherwise noted on plans.

C. Warning tape shall be installed two feet below final grade over centerline of pipe.

3.2 INSTALLATION OF LOCATOR WIRE FOR NON-METALLIC PIPE

A. Identification tape shall be installed over all buried piping in accordance with the manufacturer's installation instructions and as specified herein.

B. For sanitary force main, locator wire shall be installed along the top and taped to the pipe. Access points for the locator wire shall be placed every 400 feet. Access points shall be 4-ionch diameter PVC with threaded metallic caps painted green. Pipe shall be flush with greade. Wire shall be pulled to within 6-inches of the top of the pipe.

C. For open-cut trenches installlation, one locator wire should be used. For trenchless installations (jack and bore or directional drilling) two locator wires shall be used.

END OF SECTION 02558
WESTFIELD STANDARD – 2006

Know what's **below.**
Call before you dig.
Within Indiana Call
811 or 800-382-5544
24 Hours a Day, 7 Days a Week.
PER INDIANA STATE LAW IC 8-1-26. IT IS AGAINST THE LAW TO EXCAVATE WITHOUT NOTIFYING THE UNDERGROUND LOCATION SERVICE TWO (2) WORKING DAYS BEFORE COMMENCING WORK.

10505 N. College Avenue
Indianapolis, Indiana 46280
weihe.net
317 | 846 - 6611
800 | 452 - 6408
317 | 843 - 0546 *fax*
ALLAN H. WEIHE, P.E., L.S. - FOUNDER

WEIHE ENGINEERS
Land Surveying | Civil Engineering
Landscape Architecture

PROJECT NO.:	W15.0316
DWG NAME:	w150316-C900 spec.dwg
DESIGNED BY:	RLW
DRAWN BY:	RLW
CHECKED BY:	BJS
DATE:	01.29.2016

REVISIONS AND ISSUES	DATE	BY
SUBMITTED FOR COUNTY SURVEYOR REVIEW	10.16.2015	BJS
ISSUED FOR TAC REVIEW	01.29.2016	BJS

STEVEN SCOTT RUCKER REGISTERED PE11300279 STATE OF INDIANA PROFESSIONAL ENGINEER
APPROVAL PENDING NOT FOR CONSTRUCTION

STEVEN SCOTT RUCKER P.E. 11300279

PREPARED FOR:
Culver's of WESTFIELD
17651 SUN PARK DRIVE, WESTFIELD, IN 46074

WESTFIELD GENERAL SPECIFICATIONS
Part of SW/4, Section 36, Township 19 North, Range 3 East, Washington Township, Hamilton County, Indiana

SHEET NO.
C900

PROJECT NO.
W15.0316

LOCATION: H:\2015\w150316\Engineering\design\conset\w150316-C900 spec.dwg
LAYOUT: C900
DATE/TIME: January 28, 2016 - 2:46pm
PLOTTED BY: schoeffb

CHAPTER 400 STORM SEWER PIPES AND OPEN CULVERT MATERIALS
SECTION 401 GENERAL

401.01
Introduction

This section covers all work necessary for the construction of the storm sewer piping systems and related items complete, including catch basins and inlet drains, manholes, junction chambers, diversion chambers, outfall structures, and miscellaneous structures.

This specification covers the following types of materials for storm sewers, culverts, underdrains, inlet drains, conduits, and miscellaneous applications:

1. Reinforced Concrete Pipe and Fittings
2. Polyvinyl Chloride Pipe (PVC)
3. Corrugated Metal Pipe
4. Structural Plate Arches
5. Aluminum or Aluminized Steel Pipe and Structural Plate
6. Multi-Plate Pipe and Pipe Arches
7. PVC Composite Pipe
8. Corrugated Polyethylene Pipe- SSD (Perforated and Non-Perforated)

All lots shall have access to a subsurface or storm drain or open ditch. Storm sewer systems shall have a minimum of four hundred (400) feet between structures.
This specification requires project plans and construction specifications to be submitted to and approved by all appropriate regulatory agencies prior to beginning any work. Before construction and preferably before fabrication, the Contractor shall submit to the Town of Westfield Public Works Department for approval calculations on the thickness or strength class and drawings showing pipe lengths, joints, and other construction and installation details.

Pipe Marking

Each length of pipe shall bear the name or trademark of the manufacturer, the location of the plant, and the date of manufacture. Each length shall likewise be marked to designate the class or strength of the pipe. The marking shall be made on the exterior or interior of the pipe barrel near the bell or groove end and shall be plainly visible.

401.02
Minimum Size for Storm Sewers

The minimum diameter of all storm sewers shall be 12 inches. When the minimum 12-inch diameter pipe will not limit the rate of release to the required amount, the rate of release for detention storage shall be controlled by an orifice plate or other device, subject to acceptance of the Town of Westfield Public Works Department.

401.03
Materials

Manholes, Inlets, and Other Structures
Storm sewer manholes and inlets shall be constructed of precast reinforced concrete. Material and construction shall conform to the latest edition of the Indiana Department of Transportation (INDOT) "Standard Specifications", Sections 702 and 720.
Materials for manholes, junction chambers, diversion chambers, and miscellaneous concrete structures shall comply with the following:

1. Cement shall be Portland cement and shall meet the requirements of ASTM Specification C150, ACI 301, and ACI 318. Concrete for precast manhole sections shall be 3000 psi concrete. Monolithic manholes shall use 4000 psi concrete. Ready-mix concrete shall conform to ASTM C94, Alternate 2. Maximum size of aggregate shall be 3/4 inch.
Slump shall be between 2 and 5 inches.

2. Forms for chamber and structures shall be plywood or other approved material. Steel forms shall be used for the inside face of monolithic concrete manholes.

3. Reinforcing steel shall conform to ASTM A615, Grade 60 deformed bars, or ASTM A616 Grade 60 deformed bars.

4. Mortar Materials:

a. Sand - ASTM Designation C144, passing a No. 8 sieve.
b. Cement - ASTM Designation C150, Type 1.
c. Water - shall be potable.

The manufacturer shall provide openings for sewers entering and leaving the manhole. Any additional openings needed to be made in the field shall be made by drilling holes at least 1/2 inch in diameter with a maximum spacing of 3 inches.
Manhole steps shall be made from a steel reinforcing rod encapsulated in a copolymer polypropylene resin. The manhole steps shall equal or exceed OSHA requirements.
Any other special manholes, junction chambers, diversion chambers, and miscellaneous concrete structures shall be constructed as detailed on the drawings.
Manhole bases shall be set on a minimum of six (6) inches of # 8 aggregate.
Concrete ends sections shall have a minimum of a twenty-four (24) inch toe plate, either poured in place or precast, bolted to the end section per Standard Detail (ST-30). Corrugated end sections with toe plates shall require Westfield Public Works approval.

Catch Basins

During construction, precautionary measures such as adequate screening of grates shall be maintained to deter earth and other materials from entering the drains.
Catch Basins, for sediment control, locations to be determined by a Professional Engineer, and approved by the Town of Westfield Public Works Department. Catch Basins shall be located within easily accessible dedicated easements or right of way of sufficient size to facilitate the required maintenance of these structures
Catch basins and curb inlet structures which are two (2) feet by two (2) feet in size shall not have a depth deeper than four (4) feet from the invert of the lowest pipe to the lowest part of the rim elevation of the casting. All structures which do not meet this criteria shall be a manhole type,which is forty-eight (48) inches in diameter.

Castings

Cast iron or ductile iron frames and gratings for catch basins and drain inlets shall be as shown on the drawings. Bearing surfaces shall be clean and shall provide uniform contact. Castings shall be tough, close-grained gray iron, sound, smooth, clean, free from blisters, blow holes, shrinkage, cold shuts, and all defects and shall conform to ASTM A48 Class No. 30-B.
During construction, precautionary measures such as adequate screening of grates shall be maintained to deter earth and other materials from entering the drains.
The following castings types are required:
1. Manholes - Neenah R 1772 A or equivalent
2. Beehive Inlets - Neenah R 4342 or equivalent
3. "Roll Curb" Inlets - Neenah 3501 - TR or TL or equivalent
4. "Chair Back" Curb Inlet - Neenah 3287 - 10V or equivalent
5. Other types shall require approval of the Westfield Public Works Department.

Curb inlets castings which possess open backs or have grate bars parallel to traffic flow (are not "bicycle safe) will not be accepted by the Westfield Public Works Department.
Storm sewer castings manhole covers, beehive inlets, curb inlets or other approved casting shall have the following phrases cast in recessed letters two (2) inches in height:
1. "Storm Sewer"
2. "Drains to River" or "Drains To Waterway"
3. "Dump No Waste"
4. Other phrases shall require approval of the Westfield Public Works Department.
All castings frames shall have a horizontal bearing surface around the entire perimeter of the frame in order to support the cover or grate.

Bench Walls

Bench walls shall be shaped and formed for a clean transition with proper hydraulics to allow the smooth conveyance of flows through the structure. The bench wall shall form a defined channel, to a minimum height of the spring line of the pipe. Bench walls shall be formed using full depth Class "A" concrete. Solid concrete block, stone or sand shall not be permitted as a base or filler for the construction of the bench wall.

Reinforced Concrete Pipe and Fittings

Reinforced concrete pipe and fittings shall conform to ASTM C76, latest revision, for circular pipe and ASTM C507 for elliptical pipe.

Reinforced concrete pipe and fittings for normal conditions shall be reinforced in accordance with ASTM C76, Class III, IV or V, Wall B (minimum). Acceptance shall be on the basis ofSubsection 4.1.1 of ASTM C76.
Circumferential reinforcing in circular pipe shall be required. Only with approval from the Westfield Public Works Department will elliptical reinforcing or combination of elliptical and circumferential reinforcing or part circular reinforcing shall be permitted, in circular pipe.
Concrete pipe shall be steam cured and shall not be shipped from point of manufacture for at least five days after having been cast.
Joints shall conform to the requirements of ASTM C443. Gaskets shall be of an oil resistant type having a maximum swell of 90% when tested in accordance with ASTM D471. Lubricant for jointing shall be approved by gasket manufacturer.
All rubber gaskets similar to and equal to "Press-Seal" or "Tylox" conforming to ASTM Designation C443, latest revision. The gasket shall be attached to the spigot of the pipe and shall be the sole element depended upon to make the joint flexible and practically watertight.
Butyl mastic joint sealant in rope or trowel applied form specifically made for permanently sealing joints in tongue and groove concrete sewer pipe. The material shall adhere tightly to the pipe surface and form a tight, flexible joint. The material shall have been in use for at least five years. Test results and material specifications shall be submitted to the Westfield Public Works Department and shall have been approved prior to use on the project.

Polyvinyl Chloride Pipe and Fittings

Polyvinyl chloride (PVC) pipe and fittings shall comply with ASTM D 3034.

Corrugated Metal Pipe and Pipe Arches

The following specifications shall govern the manufacture of the corrugated steel pipe and pipe arches.

1. Specifications for Zinc Coated (galvanized) Steel Sheets (ASTM A444).
2. Manufacture of Corrugated Steel Culverts and Underdrains (AASHTO M-36).
3. Structural Plate for Pipe, Pipe Arches, and Arches (AASHTO M-167.
4. Bituminous Coated Corrugated Steel Pipe and Arches (AASHTO M-190).
5. Sheet Material (ASTM A525).

Bituminous Coated Welded Seam Helically Corrugated Steel Pipe

The pipe shall be fabricated from flat coils. The base metal, spelter coating, and fabrication shall meet the applicable requirements of AASHTO M-36. Corrugations shall be 2-2/3-inch pitch by 1/2-inch depth. Each pipe shall have two annular corrugations rolled in each end. After the ends are rolled, the pipe shall be coated with bituminous material, inside and outside, to a minimum thickness of 0.05 inch as required by AASHTO M-190 for Type A coating.

Bituminous Coated and Paved Invert Welded Se Corrugated Steel Pipam Helicallye

The pipe shall be fabricated from flat coils. The base metal, spelter coating, and fabrication shall meet the applicable requirements of AASHTO M-36. Corrugations shall be 2-2/3-inch pitch by 1/2-inch depth. Each pipe shall have two annular corrugations rolled in each end.
After the ends are rolled, the pipe shall be coated with bituminous material, inside and outside, to a minimum thickness of 0.05 inch. In addition, bituminous material shall be applied to form a smooth pavement in the bottom 25% of pipe and in the bottom 40% of pipe arch as required by AASHTO M-190 for Type C coating.

Smooth Lined Welded Seam Helically Corrugated Steel Pipe

The pipe shall be fabricated from flat coils. The base metal, spelter coating, and fabrication shall meet the applicable requirements of AASHTO M-36. Corrugations shall be 2-2/3-inch pitch by 1/2-inch depth. Each pipe shall have two annular corrugations rolled in each end. Each pipe shall have two lifting lugs welded to the outside of the pipe.
After the ends have been rolled, the pipe shall be coated with bituminous material, inside and outside, to a minimum thickness of 0.05 inch as required by AASHTO M-190 for Type A coating. The pipe shall be centrifugally lined on the inside with bituminous material to form a smooth surface which fills the corrugations to a minimum thickness of 1/8 inch above the crests of the corrugations. The bituminous lining material shall meet the requirements of AASHTO M-190.

Bituminous Coated Pipe Couplings

Coupling bands shall be the same base metal and spelter coating as the pipe. Bands shall be 0.064-inch thick and 10-1/2 inches wide. Bands shall be bituminous coated and shall have two corrugations 7-5/8 inches center to center. Bands 12-inch diameter through 30-inch diameter shall be one-piece, and 36-inch diameter through 96-inch diameter shall be two-piece. Band laps 12-inch diameter through 48-inch diameter shall be joined by one galvanized bar, bolt, and strap connector. Band laps 54-inch diameter through 96-inch diameter shall be joined by two galvanized bar, bolt, and strap connectors.

Aluminum Alloy Structural Plate

Aluminum alloy plates and fasteners intended for use in the construction of structural plate pipe and pipe arch for storm sewers shall meet the applicable requirements of AASHTO M-219. The plate shall be fabricated from aluminum alloy 5052 H141. The chemical composition of the plates shall conform to ASTM B209 alloy 5052.
The corrugations shall have a pitch of 9 inches plus or minus 3/8 inch and depth of 2-1/2 inches plus or minus 1/8 inch. The inside crown radius of the corrugations shall be not less than 2 inches.
The structural plate pipe or arches shall be assembled in accordance with the manufacturer's erection instructions and in accordance with the drawings.

Aluminized Steel Pipe and Arches

Aluminized coated corrugated steel pipe and pipe arch intended for use in the construction of storm sewers shall meet the applicable requirements of AASHTO M-36. Sheet material shall meet the latest revision of ASTM A525 and AASHTO M-274. The coils from which the pipe isproduced shall be coated with 1.0 ounce per square foot of commercially pure aluminum.
Pipe shall be furnished circular or as a pipe-arch shape as required and shall be fabricated with helical corrugations and a continuous welded seam extending from end to end of each length of pipe.
Each end of each pipe with the welded seam shall have two annular corrugations reformed to permit joining with hugger bands.
Coupling bands shall be hugger bands.

Multi-plate Pipe and Pipe Arches

Multi-plate pipe and pipe arch structures shall be in accordance with AASHTO M-167. They shall be made with steel sections with corrugations 6 inches wide by 2 inches deep running at right angles to the section.
Bolts and nuts shall be special heat-treated galvanized 3/4-inch diameter bolts in accordance with ASTM specifications.
Multi-plate pipes and pipe arches shall be designed in accordance with the manufacturer's design criteria and in accordance with the drawings.
Detailed instructions regarding erection shall be furnished by the manufacturer.

PVC Composite Pipe and Fittings

ABS or PVC composite pipe and fittings shall conform to ASTM D 2680, Latest Revision.

Corrugated Polyethylene Pipe and Fittings

Corrugated polyethylene pipe shall comply with the requirements fore materials, test methods, dimensions, and marking in accordance with AASHTO M-252 for pipe diameters 6" - 10", AASHTO M-294 for pipe diameters of 12" - 48", and AASHTO MP7 for 54" and 60".
The resin material shall meet ASTM D3350 cell classification 335400C.
The pipe lengths shall be connected using a gasketed, bell and spigot joint. This joint shall consist of a factory installed, gasketed double bell polyethylene coupling, a factory welded bell or integral bell. The spigot end of the pipe shall be furnished with a factory installed elastomeric profile "Oring" rubber gasket that meets ASTM F-477.
The pipe shall be shipped with a removable wrap to protect the gasket. Provide lubrication to the joint prior to pushing together. At least two (2) corrugations of the spigot end must insert into the bell end.
All HDPE pipe shall be certified through the Plastic Pipe Institute (PPI) Third Party Certification Program. All HDPE pipe delivered and installed shall bear the Third Party Administered PPI Seal.

Subsurface Drain Tiles

Double wall smooth bore corrugated polyethylene tile, manufactured under specification ASTM F 667, shall be required for all subsurface drain tile installed in swales. Single wall corrugated polyethylene drain tile shall be required for curb sub-grade drainage.
Polyethylene tile shall possess male and female pipe ends, which allow the construction of overlapping, gasket pipe joints, in conformance with the requirements of ASTM D 3212. The gasket material shall conform to all requirements of ASTM F 477. As an alternative, pipe joints utilizing external couplings bands will be accepted, provided the minimum AASHTO requirements for satisfying soil tightness are also achieved.
Storm sewer pipe shall be of the size shown on the drawings and shall meet all requirements of these specifications. Subsurface drains (SSD) shall have a minimum of four hundred (400) feet between structures. Subsurface drains shall have clean-outs installed every 400 feet or at changes in direction.

CHAPTER 500 INSTALLATION OF STORMWATER FACILITIES
SECTION 501 GENERAL

501.01
Pipe Cover, Grade, and Separation from Sanitary Sewers

Pipe

Pipe grade shall be such that, in general, a minimum of 2.0 feet of cover is maintained over the top of the pipe. If the pipe is to be placed under pavement, then the minimum pipe cover shall be 2.5 feet from top of pavement to top of pipe. Uniform slopes shall be maintained between inlets, manholes and inlets to manholes. Final grade shall be set with full consideration of the capacity required, sedimentation problems, and other design parameters. Minimum and maximum allowable slopes shall be those capable of producing velocities of between 2.5 and 10 feet per second, respectively, when the sewer is flowing full. Maximum permissible velocities for various storm sewer materials are listed in Table 501-1. A minimum of 2.0 feet of vertical separation between storm sewers and sanitary sewers shall be required. When this is not possible, the sanitary sewer must be encased in concrete or ductile iron within 5 feet, each side, of the crossing centerline.

Rear Yard Swale

Rear yard swales shall have a minimum slope of 2% gradient. Swales less than a 2% gradient are required to have double-wall perforated drain tile installed two (2) feet below the invert of the swale. Minimum swale slope shall be greater than 1% gradient. Subsurface drains shall have a minimum slope of .5% gradient.
Proposed road grades will be required to be graded within two (2) inches of the proposed subgrade prior to installation of SSD. Trench width for SSD shall be a minimum of three (3) inches on both sides of the SSD, with a minimum trench width of twelve (12) inches.

501.02
Alignment

Storm sewers shall be straight between manholes and/or inlets.

501.03
Manholes/Inlets

All Manholes and Inlets must be pre-stamped with an appropriate message per the Town of Westfield Public Works Department Standards. Manholes and/or inlets shall be installed to provide human access to continuous underground storm sewers for the purpose of inspection and maintenance. The casting access minimum inside diameter shall be no less than 22 inches or a rectangular opening of no less than 22 inches by 22 inches. Manholes shall be provided at the following locations:

1. Where two or more storm sewers converge.
2. Where pipe size or the pipe material changes.
3. Where a change in horizontal alignment occurs.
4. Where a change in pipe slope occurs.
5. At intervals in straight sections of sewer, not to exceed the maximum allowed. The maximum distance between storm sewer manholes shall be as shown in Table 501-2.

In addition to the above requirements, a minimum drop of 0.1 foot through manholes and inlet structures should be provided. Pipe slope should not be so steep that inlets surcharge (i.e. hydraulic grade line should remain below rim elevation).
Manhole/inlet inside sizing shall be according to the Town of Westfield Public Works Department Standards. Note that the Town of Westfield Public Works Department may require the applicant to provide pre-treatment BMPs prior to discharge of the storm sewer line into a pond.

501.04
Installation and Workmanship

Bedding and backfill materials around storm sewer pipes, sub-drains, and the associated structures shall be according to the Town of Westfield Public Works Department Standards. The specifications for the construction of storm sewers and sub-drains, including backfill requirements, shall not be less stringent than those set forth in the latest edition of the "INDOT Standard Specifications".
Additionally, ductile iron pipe shall be laid in accordance with American Water Works Association (AWWA) C-600 and clay pipe shall be laid in accordance with either American Society of Testing Materials (ASTM) C-12 or the appropriate American Association of State Highway and Transportation Officials (AASHTO) specifications. Dips/sags on newly installed storm systems will not be allowed. Also, infiltration from cracks, missing pieces, and joints shall not be allowed. Variations from these standards must be justified and receive written acceptance from the Town of Westfield Public Works Department. All structures shall require inspection prior to backfill.

501.05
Special Hydraulic Structures

Special hydraulic structures required to control the flow of water in storm runoff drainage systems include junction chambers, drop manholes, stilling basins, and other special structures. The use of these structures shall be limited to those locations justified by prudent planning and by careful and thorough hydraulic engineering analysis. Certification of special structures by a certified Structural Engineer may also be required.
The use of stormwater lift stations will not be permitted under any circumstances.

501.06
Connections to Storm Sewer System

Unless otherwise approved, perforated subsurface drain tiles, footer drains, or sump pumps lines shall connect to a storm structure. Storm sewer connections shall be provided by either precast or drilled holes, which are to be a minimum of two (2) inches larger the O.D. of the connecting tile. Drain tile connections shall be made with either "Tee" or "Wye" method.
Blind connections to storm sewer pipes shall not be allowed.
Subsurface tile as specified herein may be used to convey water collected in sump pits and footer drains to an acceptable storm sewer outlet, provided these drain tiles are properly sized to accept these flows.
Gutter or building drains shall not be allowed to outlet directly into storm sewer systems.
To allow any connections to the storm sewer system, provisions for the connections shall be shown in the drainage calculations for the system. Specific language shall be provided in the protective covenants, on the record plat, or with the parcel deed of record, noting the ability or inability of the system to accommodate any permitted connections, for example, sump pumps and footing drains.

1. Sump pumps installed to receive and discharge groundwater or other stormwater shall be connected only into "T" subsurface drain (SSD) lateral connection if provided. When connection to the SSD is not possible, discharge pipe must daylight. Sump pumps installed to receive and discharge floor drain flow or other sanitary sewage shall be connected to the sanitary sewers. A sump pump shall be used for one function only, either the discharge of stormwater or the discharge of sanitary sewage, each being connected to the respective receiving system only.
2. Footing drains and perimeter drains shall be connected only into "T" subsurface drain (SSD) lateral connection if provided. When connection to the SSD is not possible, discharge pipe must daylight.
3. All roof downspouts, roof drains, or roof drainage piping shall discharge onto the ground and shall not be directly connected to the storm drainage system. Variation from this requirement may be requested and granted by the Town of Westfield Public Works Department in special circumstances. No downspouts or roof drains shall be connected to the sanitary sewers.
4. Garage and Basement floor drains and water softener discharge shall not be connected to the storm sewers.
5. Swimming Pool drains shall not be connected to the storm sewers unless the water is dechlorinated prior to being connected to the storm sewer.

501.07
Inspection and Rejection of Pipe

The quality of all materials, the process of manufacture, and the finished pipe shall be subject to inspection and approval by the Westfield Public Works Department or designee. Such inspection may be made at the place of manufacture or on the work after delivery, or at both places; and the pipe shall be subject to rejection at any time on account of failure to meet any of the specifications' requirements even though sample pipes may have been accepted as satisfactory at the place of manufacture.
Prior to being lowered into the trench, each pipe shall be carefully inspected and those not meeting the specifications shall be rejected and at once removed from the work.

The Westfield Public Works Department shall have the right to cut cores from such pieces of the concrete pipe as he desires for such inspection and tests as he may wish to apply. The Developer/Contractor shall pay for the samples of an Independent Laboratory Testing.
Holes left by the removal of cores shall be filled in an approved manner by and at the expense of the manufacturer of the pipe.
The Westfield Public Works Department shall also have the right to take samples of concrete after it has been mixed, or as it is being placed in the forms or molds, and to make such inspection and tests thereof as he may wish.
Any pipe which has been damaged after delivery will be rejected and replaced solely at the Contractor's expense.

501.08
Handling Pipe

Each pipe section shall be handled into its position in the trench only in such manner and by such means as the Westfield Public Works Department or designee approves as satisfactory. As far as practicable, the Contractor will be required to furnish slings, straps, and other approved devices to permit satisfactory support of all parts of the pipe when it is lifted.

501.09
Notice to Westfield Public Works Department

The Westfield Public Works Department or designee shall be notified when the pipes are to be laid in the trench. At least 15 feet of the pipe shall, under ordinary circumstances, be laid before covering begins.

501.10
Laying Pipe

All pipes shall be reinspected for soundness and damage due to handling immediately before being lowered into the trench. Any pipe found to be unsound or damaged will be rejected and shall be removed immediately from the site of the work..
No portion of a Storm Sewer pipe, open culvert, manhole, inlet, or subsurface tile system shall be installed directly or indirectly onto frozen ground or with frozen backfill materials.
Where ground water is encounter, the contractor shall make every effort necessary to secure a dry trench bottom prior to installation of the storm water system. The contractor shall be required to maintain the groundwater level below the base of the excavation. The Town, nor the Westfield Public Works Department, will not assume any liability for the actions of the Developer or Contractor in the performance of the required dewatering operation. If trench conditions outlined in this section cannot be achieved, the Westfield Public Works Department or designee may terminate installation until such efforts can be achieved.
All pipes shall be laid accurately to the required line and grade as shown on the drawings, and in the manner prescribed by the pipe manufacturer and appropriate ASTM Specifications, to form a close, concentric joint with the adjoining pipe and to bring the invert of each section to the required grade. The supporting of pipe on block will not be permitted.
Pipe lying shall precede upgrade, beginning at the lower end of the sewer. Practically watertight work is required, and the Contractor shall construct the sewers with the type of joint specified.
Joints between precast structures shall be sealed with (1) An approved rubber gasket manufactured and installed in accordance with ASTM C 443, latest version, (2) A ½ inch diameter non-asphaltic mastic (Kent Seal or approved equal) conforming to AADHTO M-198 and Federal Specifications SS 521-A, or 4 (3) mortar or butyl rubber sealed on the outside and (4) mortar sealed on the inside and brushed smooth.
The annular space between the pipe and precast structure walls shall be filled inside and outside with a grout mixture composed of 2 parts of fine aggregate and one part of Portland Cement or Class "A" Concrete.
All pipes shall be laid to the line and grade as shown on the drawings. Variations from a uniform line and grade as shown on the drawings shall be cause for the line to be rejected.
The ends of the pipe shall be satisfactorily cleaned just before laying, and the joint shall be made in a satisfactory manner in accordance with the recommendations of the manufacturer on particular type of joint. All joint work shall be done by experienced workmen.
All pipes shall be bedded as described in this specification under Pipe Bedding. Bell holes shall be excavated in advance of pipe laying so the entire pipe barrel will bear uniformly on the prepared subgrade.
Each length of pipe shall be mechanically pulled "home" with a winch or come-along against the section previously laid and held in place until the trench and bedding are prepared for the next pipe section. Care shall be taken in laying the pipe so not to damage the bell or the spigot end of the pipe. Mechanical means consisting of a cable placed inside the pipe with a winch, jack, or come-along shall be considered to pull the pipe home where pushing the pipe will not result in ajoint going completely home and staying in place. The Contractor shall use laser beam equipment, surveying instruments, or other proven techniquesto maintain accurate alignment and grade.
Open excavation shall be satisfactorily protected at all times. At the end of each day's work, the open ends of all pipes shall be protected against the entrance of animals, children, earth, or debris by bulkheads or stoppers. The bulkheads or stoppers shall be perforated to allow passage of water into the installed pipe line to prevent flotation of the pipe line. Any earth or other material thatmay find entrance into the main sewer or into any lateral sewer through any such open end of unplugged branch must be removed at the Contractor's expense. The cost of all such plugs, and the labor connected therewith, must be included in the regular bid for the sewers.
Storm sewer which outlets into a Hamilton County Regulated Drain shall be approved, inspected, and constructed per the latest standards of the Hamilton County Surveyor's Office Standards.

501.11
Pipe Bedding and Haunching

Each pipe section shall be laid in a firm foundation of bedding material and haunched and backfilled with care.
Prior to pipe installation, carefully bring bedding material to grade along the entire length of pipe to be installed. To provide adequate support for the pipe, the following bedding procedures are recommended.
When Angular 60 to 12 mm (1/4 to 1/2-inch) clean graded stone, slag, or crushed stone material is used for bedding, little or no compaction is necessary due to the nature of the angular particles. A depth of 4 to 6 inches is generally sufficient to provide uniform bedding. If Class I material isused for bedding, it must also be utilized for haunching up to or higher than the spring line of thepipe to avoid loss of side support through migration of Class II haunching material into the bedding.

1. Take care with coarse sands and gravels and maximum size 20 mm (3/4-inch) materials, to provide uniformly compacted bedding. Excavate the bedding material or place it to apoint above the pipe bottom, determining such point by the depth of loose material resulting in the preparation of the bedding and the amount of compaction that will berequired to bring the material to grade. Use hand or mechanical tamping to compact the bedding material to a minimum 85% Standard Proctor Density.
2. Slightly damp material will generally result in maximum compaction with a minimum of effort. If water is added to improve compaction or if water exists in the trench, take care to avoid saturation of Class II material, which could result in additional stability problems. Check grade of bedding after compaction.

Bedding material shall have a minimum thickness beneath the pipe of 4 inches (100 mm) or oneeighth of the outside diameter of the pipe, whichever is greater, and shall extend up the sides of the pipe one-sixth of the outside diameter of the pipe.
The rigid pipe, such as concrete or ductile iron, backfill between the bedding material and a plane 12 inches (300 mm) over the top of the pipe shall be hand-placed finely divided earth, free from debris and stones, or granular backfill if required.
For flexible pipe, corrugated metal pipe, the placement of embedment material or haunching around the pipe must be done with care. The ability of the pipe to withstand loading in a trench depends a large part on the method employed in its installation. If crushed stone, pea gravel, or graded gravel or sand is used to backfill between the bedding material and a plane 12 inches (300mm) over the top of the pipe, it shall be hand placed. If fine sand, silt, or clayey gravels are used for initial backfilling over the pipe, the material shall be hand placed in 6- to 8-inch layers and hand compacted on both sides of the pipe to an elevation 12 inches (300 mm) over the top of the pipe. Care should be taken so not to compact directly over the pipe.

In yielding subsoils, the trench bottom shall be undercut to the depth necessary and backfilled with graded, crushed stone to form a firm foundation.
Where excavation occurs in rock or hard shale, the trench bottom shall be undercut and a minimum of 6 inches (150 mm) crushed stone bedding placed prior to pipe installation.

501.12
Concrete Cradle (Class "A" Bedding)

Concrete cradles shall be constructed of Class "B" concrete and of the design shown on the detailed drawings.

501.13
Manholes and Other Structures

Manholes and other structures are to be constructed at locations shown on the drawings and in accordance with the following specifications:
Precast concrete manhole sections shall conform to ASTM Designation C478, except as modified herein:

1. The joint design of the precast sections shall consist of a bell or groove on one end of the unit of pipe and a spigot or tongue on the adjacent end of the joining section.
2. The joint shall consist of a flat rubber gasket attached to the spigot end of the precast manhole section and shall conform to Sections 6.1.6, 6.1.7 and 9 of ASTM Designation 443, latest revision.

Openings in manhole sections for sewer connections shall be cut at the point of manufacture and shall be circular or horseshoe shaped with grooved or roughened surfaces to improve mortar bond.
Manhole bases shall be cast-in-place concrete, reinforced as shown on the Standard Detail Sheet.
Manhole bases shall be cast on a minimum of 6 inches of compacted crushed stone.
Manhole channels or inverts (flow lines) shall be preformed and poured with Class "B" concrete to the spring line of the connecting pipe. The finished invert shall be a semi-circular shaped smooth channel directing the flow to the downstream sewer.
Manhole frames and lids shall be of good quality cast iron, conforming to ASTM Designation A48 and as shown on Detail #2 on the Standard Detail Sheet (See Section 2-11 C-1). Unless specifically designated otherwise, manhole castings shall be the non-locking type. The joint between the casting frame and cone section shall be fully mortared or gasketed and coated with butyl rubber or a coal tar epoxy coating upon reaching its final set to become a watertight joint.
Manhole steps shall be made from a steel reinforcing rod encapsulated in a copolymer polypropylene resin. Steps shall be placed as shown on the drawings.

TABLE 501-1		
Typical Values of Manning's "n"		
Material	Manning's "n"	MaximumVelocities (feet/second)
Closed Conduits		
Concrete	0.013	10
Vitrified Clay	0.013	10
HDPE	0.012	10
PVC	0.011	10
Circular CMP, Annular Corrugations, 2 2/3 x ½ inch		
Unpaved	0.024	7
25% Paved	0.021	7
50% Paved	0.018	7
100% Paved	0.013	7
Concrete Culverts	0.013	10
HDPE or PVC	0.012	10
Open Channels		
Concrete, Trowel Finish	0.013	10
Concrete, Broom Finish	0.015	10
Gunite	0.018	10
Riprap Placed	0.030	10
Riprap Dumped	0.035	10
Gabion	0.028	10
New Earth (1)	0.025	4
Existing Earth (2)	0.030	4
Dense Growth of Weeds	0.040	4
Dense Weeds and Brush	0.040	4
Swale with Grass	0.035	4

Source of manning "n" values: HERPICC Stormwater Drainage Manual, July 1995.
(1) New earth (uniform, sodded, clay soil)
(2) Existing earth (fairly uniform, with some weeds).

TABLE 501-2	
Maximum Distance Between Manholes	
Size of Pipe (Inches) (Feet)	Maximum Distance
All sizes	400

Know what's below.
Call before you dig.
Within Indiana Call
811 or 800-382-5544
24 Hours a Day, 7 Days a Week.
PER INDIANA STATE LAW IC 8-1-26. IT IS AGAINST THE LAW TO EXCAVATE WITHOUT NOTIFYING THE UNDERGROUND LOCATION SERVICE TWO (2) WORKING DAYS BEFORE COMMENCING WORK.

10505 N. College Avenue
Indianapolis, Indiana 46280
weihe.net
317 | 846 - 6611
800 | 452 - 6408
317 | 843 - 0546 fax
ALLAN H. WEIHE, P.E., L.S. - FOUNDER
WEIHE ENGINEERS
Land Surveying | Civil Engineering
Landscape Architecture

PROJECT NO.:	W15.0316
DWG NAME:	w150316-C900 spec.dwg
DESIGNED BY:	RLW
DRAWN BY:	RLW
CHECKED BY:	BJS
DATE:	01.29.2016

REVISIONS AND ISSUES	DATE	BY
SUBMITTED FOR COUNTY SURVEYOR REVIEW	10.16.2015	BJS
ISSUED FOR TAC REVIEW	01.29.2016	BJS

STEVEN SCOTT RUCKER REGISTERED PE11300279 STATE OF INDIANA PROFESSIONAL ENGINEER
APPROVAL PENDING NOT FOR CONSTRUCTION
STEVEN SCOTT RUCKER P.E. 11300279

PREPARED FOR:
Culver's of WESTFIELD
17651 SUN PARK DRIVE, WESTFIELD, IN 46074

WESTFIELD STORM SEWER SPECIFICATIONS
Part of SW/4, Section 36, Township 19 North, Range 3 East, Washington Township, Hamilton County, Indiana

SHEET NO.
C901
PROJECT NO.
W15.0316

LOCATION: H:\2015\w150316\Engineering\design\conset\w150316-C900 spec.dwg
LAYOUT: C903
DATE/TIME: January 28, 2016 - 2:46pm
PLOTTED BY: schoeffb

C. Support

The trench shall be excavated to provide a uniform and continuous bearing of support for the pipe barrel and joints.

D. Bedding and Backfill

Backfilling shall be initiated as soon as possible after the placement of pipe in the trench and performed in a manner so as not to damage the pipe or pipe coating. The Utility has the right to alter the backfill procedure, so as to give maximum protection to the pipe and coating. All tap excavations are required to be backfilled with granular fill to the point 2' above the water main. For the utility backfill requirements, reference CW Standard Practice Drawing "A.1"– Water Main and Service Backfill Requirements.

No trash, e.g., sticks, welding rod, stumps or refuse material of any kind, shall be buried within the trench. After the pipe has been properly installed and the trench has been properly backfilled by the Contractor/Developer, excess excavated material shall be removed from the construction site and properly disposed in accordance with all Federal, State, and Local regulations by theContractor/Developer.

All backfill in public right–of–way shall conform to the rules and regulations of the prevailing governmental authority. All backfill shall conform to the pipe manufacturers specifications, and shall be clean, non–corrosive, compactable, and free of rock.

E. Sewer and Drainage Flow Maintenance

Adequate provisions shall be made for the continuous flow and operations of sewers, drains and watercourses encountered during construction. Structures that may have been disturbed shall be satisfactorily restored to avoid contamination of the water main at the expense of the Contractor/Developer.

9.06 Erosion Control

The Contractor/Developer shall be responsible to ensure that each applicable construction site shall be in compliance with all the applicable sections of 327 Indiana Administrative Code (IAC) 15–5 (Rule 5). http://www.in.gov/idem/4902.htm

9.07 Contaminated Soils

A. General

Contaminated soils encountered during construction of the water main facilities shall require immediate cessation of construction and notification to the Utility. The Contractor/Developer shall comply with all Local, State and Federal regulations including notification of authorities regarding the contaminated materials.

B. Water Main and Service Line Material Requirements

Only DI pipe, inert gasket material and fittings shall be used in areas in close proximity of contaminated soils. The pipe must be double–wrapped and secured appropriately at the joints with cross–laminated polyethylene wrap.

C. Testing

The Contractor/Developer shall be responsible for all corresponding fees related to contaminated soil (e.g., sampling, testing, permits, disposal, etc.).

D. Disposal of Contaminated Soil

Contractor/Developer shall dispose of contaminated soils in accordance with all Local, State and Federal regulations. Contractor/Developer shall be listed solely as the waste generator.

The Contractor/Developer shall notify the Utility of all projects involving contaminated soils including all supporting documentation.

9.08 Service Taps

Tap placement shall be a minimum of 3' from any existing fitting or tap. Any deviation from 3' must be approved by the Utility.

No "back side" taps are allowed on any size water main, unless approved by the Utility.

All 1–1/2" and 2" taps require installation of a swing joint between the tap and curb stop. See CW Standard Practice Drawing 'N' – 1–1/2" & 2" Service Line Swing Joint.

9.09 Pipe Installation

A. General

1. Materials Inspection

Before lowering any materials into the trench for assembly, the pipe, fitting, valve or fire hydrant shall be thoroughly inspected by the Contractor/Developer. Any defective, damaged or unsound material shall not be installed and shall be immediately removed from the job site.

2. Materials Cleanliness

When the pipe is installed, it shall be free of all foreign matter and the interior cleaned by swabbing before it is placed in the trench. No debris of any kind shall be left in the bell and/or spigot.

The pipe swabbing shall be performed by using pipe swab brushes

comprised of Tampico brush material.

3. Pipe Closures

When necessary, the open ends of the installed pipe shall be closed by approved means and at no time shall trench water be permitted to enter the pipe.

4. Pipe Cutting

When cutting pipe for inserting valves, fittings or closure pieces, it shall be performed in a neat and workmanlike manner without damage to the pipe.

PVC or DI pipe to be inserted into a push–on joint bell end shall have the cut end beveled in accordance with the manufacturer's instructions so as to prevent the edge of the pipe from cutting or tearing the gasket as the spigot end is inserted into the bell of the adjoining pipe or fitting.

PVC pipe inserted into a fitting, valve or other appurtenance with a MJ connection shall have the factory tapered or beveled end removed from the end of the pipe to make the pipe end square.

When cutting HDPE pipe, the cut end of the pipe shall be squared as much as possible prior to facing. Field cutting of HDPE pipe 8" in diameter or less can be accomplished without damaging the pipe ends due to melting by using a pipe saw. To cut HDPE pipe with a diameter larger than 8", a chain saw with a glycerin based lubricant shall be used.

5. Concrete Thrust Blocking

Blocking shall be installed as shown on the plan drawings and as specified in Section 9.15, "Thrust Blocking".

6. Charging, Flushing, Air Removal and Hydrostatic Testing Any charging, flushing, air removal and hydrostatic testing shall be conducted as specified in Section 9.19, "Charging, Flushing, Air Removal and Hydrostatic Testing" and Appendix E–Construction Testing Methods.

B. Polyvinyl Chloride (PVC) Pipe

1. Installing Pipe

After placing a length of PVC pipe in the trench, the spigot for the joints shall be properly positioned and the gasket lubricated in accordance with manufacturer's requirements. The spigot end shall then be centered in the bell, the pipe forced to the marks on the pipe and brought into true alignment.

No more than two (2) joints shall be exposed at any one time.

2. Deflection of Pipe Joints

The deflection of pipe joints shall not be allowed.

3. Mechanical Pipe Joints

After the preparation of the pipe ends for a mechanical joint connection, the retainer gland shall be installed such that the bolts may be tightened in accordance with the manufacturer's recommendations. The gasket shall be lubricated per the manufacturer's instructions and inserted in the bell by drawing the gland toward the bell. The bolts shall be drawn up uniformly on opposite sides of the mechanical joint fitting per the manufacturer's torque and specification procedures.

4. Pipe Joint Restraints

Pipe joint restraints shall be installed as specified in Section 9.16, "Pipe Joint Restraint Devices." See CW Standard Practice Drawing "O"– Installation of Restraints.

5. Tracing Wire and Identification Ribbon

The tracing wire and identification ribbon shall be installed as specified in Section 9.17, "Installation of Tracing Wire and Identification Ribbon"

C. Ductile Iron (DI) Pipe and Fittings

1. Installing Pipe

Following the placement of a length of DI pipe in the trench, the gasket material for the joint shall be properly positioned and lubricated in accordance with the manufacturer's recommendations. The spigot end shall then be centered in the bell, the pipe forced to the marks on the pipe and brought into true alignment.

2. Permissible Deflection of Pipe Joints

The degree of deflection shall not exceed the manufacturer's specifications.

3. Preparation of Pipe Ends

Before installing the pipes, all lumps, blisters, and excess coal tar coating and other foreign material shall be removed from the inside of the bell and outside of the spigot ends of each pipe. The pipe surfaces shall then be wiped until clean and dry.

4. Mechanical Joint Fittings

After the preparation of the pipe ends for a mechanical joint connection, the retainer gland shall be installed such that the bolts may be tightened in accordance with the fitting and gland manufacturer's recommendations. The gasket shall be lubricated per the manufacturer's instructions and inserted in the bell by drawing the gland toward the bell. The bolts shall be drawn up uniformly on opposite sides of the mechanical joint fitting per the manufacturer's torque and specification procedures.

5. Pipe Joint Restraints

Joint restraints shall be installed in accordance with the manufacturer's guidelines as needed to provide a continuous secure pipe that is not affected by the resultant thrust forces of the distribution system, as specified in CW Standard Practice Drawing "O"–Installation of Restraints.

6. Restrained Joint Pipe

Restrained joint pipe shall be installed in accordance with the manufacturer's specifications.

7. Polyethylene Wrap

Cross laminated poly wrap shall be required.

8. Tracing Wire and Identification Ribbon

The tracing wire and identification ribbon shall be installed as specified in Section 9.16, "Installation of Tracing Wire and Identification Ribbon".

D. Polyethylene (HDPE) Pipe

1. Materials Inspection

Before lowering any materials into the trench for assembly, the HDPE pipe, fitting, valve assembly or hydrant assembly shall be thoroughly inspected by the Contractor/Developer so as to determine any defects, damage or unsoundness of the material. Any defective, damaged, or unsound pipe or appurtenance shall be rejected. At any point along the polyethylene pipeline where 10% of the wall thickness has been penetrated or removed by way of marring, gouging or abrasion, that damaged section of pipe shall be deemed unsound and shall be removed and replaced with a new, clean section of polyethylene pipe.

2. Water Stop/Thrust Restraints

To help minimize the effects of thermal contraction and expansion for HDPE pipe, water stops shall be installed as shown on CW Standard Practice Drawing "U"–Minimum Requirements for Water Stop Installation. Water stops shall be required at every change in materials.

Minimum Soil Bearing Surface Area Required for Water Stop Installation in

Undisturbed Material (Assuming 3,000 psi Soil Bearing Capacity)	
Pipe Size	Minimum Bearing Surface (ft2)
6" through 12"	8
16"	15
20"	24
24"	36

3. Allowable Deflection of HDPE Pipe

The maximum allowable deflection of HDPE pipe shall not exceed the manufacturer's recommendations. Where the maximum allowable deflection is insufficient to achieve the required change in direction, a molded or fabricated butt–fused bend or MJ fitting with MJ adapter shall be used. Deflection of HDPE pipe shall not be permitted at any in–line, butt–fused, fabricated or molded fitting.

4. Tracing Wire and Identification Ribbon

The tracing wire and identification ribbon shall be installed as specified in Section 9.17, "Installation of Tracing Wire and Identification Ribbon".

5. River Weights

Where HDPE pipe is installed at stream crossings by means of open cutting the streambed, river weights shall be used to prevent the HDPE pipe from floating during installation. The weights shall be composed of concrete.

6. Joining of HDPE Pipe to HDPE Pipe or HDPE Fittings

HDPE pipe shall be joined to successive lengths of HDPE pipe or HDPE fittings by means of butt–fusion or sidewall fusion.

On all poly pipe fusions it will be required to provide a quality control report that includes records of the profile of every poly fusion with all information recorded from the Datalogger. No poly pipe will be charged until these documents have been presented and verified for accuracy. All joints will be required to be numbered and will require measurements.

The Contractor shall furnish the Utility evidence, at the pre construction meeting, that workers performing the fusion of HDPE materials have been trained in the procedure being used in accordance with the recommendations of the pipe manufacturer and the equipment manufacturer. Where sidewall fusion is to be employed, a HDPE sidewall outlet shall be used. Mechanical type taps shall not be permitted on HDPE pipe.

The use of rollers during transport of HDPE pipe during installation is required by the Utility.

7. Joining of HDPE Pipe to Mechanical Joint Valves and Fittings

An MJ adapter and back–up ring shall be used to connect HDPE pipe to valves.

When butterfly valves are used, care shall be taken to ensure the full operational range of the valve disk.

When HDPE pipe is to be joined to a mechanical joint fitting, it shall be accomplished by means of a mechanical joint adapter fused to the pipe.

10. Joining of HDPE Tubing to Compression Fittings

When connecting HDPE tubing to compression fittings, the use of a stainless steel insert shall be used to prevent toe–in of the tubing.

9.10 Casing Pipe

A. General Requirement

The installation of casing pipe shall conform to these Standards and any Federal, State, Local or applicable railroad requirements, as specified in CW Standard Practice Drawing "I"–Typical Boring Casing Pipe.

Nominal Diameter of Main	Nominal Diameter of Casing Pipe
4"	10" HDPE
6"	12" HDPE
8"	16" HDPE
10"	
12"	24" STEEL
16"	30" STEEL
20"	36" STEEL
24"	36" STEEL
30"	42" STEEL
36"	48" STEEL
48"	60" STEEL

B. Carrier Pipes

PVC, polyethylene and ductile iron are allowed. All PVC and DI joints shall be restrained, with spacers, tracing wire and all ends sealed.

C. Casing Spacers

For 4" and larger pipe, casing spacers are required every 10' or three (3) per section (one (1) at each end and one (1) in the middle).

D. Limits of Casing (from the main to the end of casing)

1. 4' separation from edge of main to end of casing (3/4" – 1 1/4").
2. 6' separation from edge of main to end of casing (1 1/2" – 2").
3. 8' separation from edge of main to end of casing (4" and larger).

E. Tracing Stations

Tracing stations shall be installed at both ends of casing pipe and as shown in CW Standard Practice Drawing "R"–Tracing Station.

F. Isolation of Water Main in Casing pipe

1. Valves shall be provided as designed by the Utility.
2. Access points shall be installed within the limits of the valves to relieve possible pressure (e.g., air–relief valve, blow–off, flushing hydrant, etc.).

9.11 Stream Crossing

A. General Requirement

All stream crossing installations shall be in compliance with all sections of 327 Indiana Administrative Code (IAC) 8–3.2–10 Water mains near surface water bodies. http://www.in.gov/legislative/iac/T03270/A00080.PDF In addition, the Utility has additional requirements as specified in CW Standard Practice Drawing "H"–Typical Channel Crossing. All stream crossing installations require a minimum of 36" of cover. Valves shall be provided at both ends of each crossing, unless directed by the Utility. River crossing pipe may be required by the Utility under certain conditions. Marker and posts shall be provided at both ends of crossing. Only HDPE, DI or pre–stressed concrete pipe shall be used. All joints shall be restrained.

Meter pit and permanent taps shall follow CW Standard Practice Drawing "T.1"–Standard Service Line Installation and Setting for 5/8", 3/4", and 1" Meter in Single Pit. Meter pit installation shall be adjacent to water main, perpendicular to valve, unless directed by the Utility.

In the event that 10' of horizontal separation between the outside edge of the water main and/or service line and the edge of the typical water line of a water body is unattainable, the installation of the water main shall conform to the guidelines set for installation of a water main under a body of water, unless directed by the Utility.

B. Installation Method

The installation of the stream crossing shall conform to the requirements of the permitting agency, be constructed in such a manner as to protect the water main from erosion and restore the stream banks and bottom to their original condition.

C. Erosion Control

The Contractor/Developer shall be responsible to ensure that each applicable construction site shall be in compliance with all the applicable sections of 327 Indiana Administrative Code (IAC) 15–5 (Rule 5). http://www.in.gov/idem/4902.htm

9.12 Valves, Valve Boxes, Fittings and Blow–offs

A. Valves

Gate valves and pipe fittings shall be set and joined to new pipe in the manner specified for cleaning, laying and joining pipe herein. All 16" and larger butterfly valves must be operated to determine the number of total rounds. The number counted, as well as, the valve serial number must be documented accordingly.

B. Valve Boxes

Cast iron valve boxes shall be firmly supported, maintained centered and plumb over the operating nut of the valve, with the box cover flush with the surface of the finished grade or at such other level as may be directed by the Utility. The valve box, if necessary, shall be supported by means of three (3) "S"–hooks hung from the top of the riser pipe to prevent the box from sliding down the riser, as specified in CW Standard Practice Drawing "G"–Standard 8" Valve Box and Cover. Westfield – Refer to Standard Drawing for Westfield Gate Valve and Box.

C. Valve Box Riser

A solid ribbed 8" diameter PVC riser shall be required and shall be centered over the valve. If the valve is 6' deep or greater, a valve nut extension shall be provided in order to bring the operating nut to a depth, 4' below finished grade. The key nut extension shall have a centering mechanism. Westfield – Refer to Standard Drawing for Westfield Gate Valve and Box.

D. Valves shall be supported with proper backfill and blocking so that pipe shall not be required to support the valve's weight. Valves shall be installed so that the operating stem is in a true vertical position.

9.13 Setting Meter Pits, Vaults and Hot Boxes

A. General

Meter pits, vaults and hot boxes shall be set to finished grade as specified in CW Standard Practice Drawing "S"–Standard Installation for Multiple Meter Settings, CW Standard Practice Drawing "T"–Standard Service Line Installation and Setting for 5/8", 3/4" and 1" Meter in Single Pit, and CW Standard Practice Drawing "T.1"–Standard Service Line Installation and Setting for Two (2) 5/8" Meters in Single Pit.

Westfield – Refer to Standard Drawings for Water Meter and Pit.

B. Location

Meter pits, vaults and insulated/heated enclosures shall be in an easily accessible location. Meter pits and vaults shall not be installed in a traffic area or driveway unless appropriate means of protection are provided, such as concrete filled bollards. Pits, vaults and insulated and heated enclosures shall not be installed in drainage ditches or areas prone to flooding.

C. Meter Pit Lid, Ring and Riser

The top of the meter pit lid shall be flush with finished grade.

D. Vaults

All vaults shall be equipped with a sump pit or drain opening. Vaults shall be set at finished grade. Vaults shall be installed on an 8" thick minimum granular bed of stone or gravel only. Lids shall open in the direction from the outside to the center of the vault. The lid shall be aligned to center above of the steps or ladder.

9.14 Hydrants

A. General Location

Fire hydrants shall be placed in the field as shown on the approved plans, as specified and in CW Standard Practice Drawing "D"–Cul–de–Sac Water Main and Hydrant Installation and CW Standard Practice Drawing "E"–Cul–de–Sac Water Main with Hydrant at Intersection. Hydrants shall be installed consistent with CW Standard Practice Drawing "B"–Standard Hydrant Setting for 12" and Larger Water Main and CW Standard Practice Drawing "C"–Standard Hydrant Setting for 6" and 8" Water Main. Hydrants shall not be placed on the street side of the water main unless approved by the Utility.

B. Drainage at Hydrant

#8 washed stone or equivalent shall be placed below and around the base of the hydrant as shown in with CW Standard Practice Drawing "B"–Standard Hydrant Setting for 10" and Larger Water Main and CW Standard Practice Drawing "C"– Standard Hydrant Setting for 6" and 8" Water Main. Sand shall not be used for this purpose.

C. Branch Valves

Branch valves shall be provided on every hydrant on main sizes 12" and larger and all hydrants for Westfield.

D. Alignment

Hydrants shall be aligned vertically plumb. Blocking shall be installed to ensure the hydrant is not misaligned. The break–ring shall be installed within 3" of finished grade.

E. Bollards

Where hydrant protection is necessary, bollards shall be installed in accordance with the Indiana Fire Code, Section 312. http://www.archive.org/stream/gov.in.fire/in_fire_djvu.txt

9.15 Thrust Blocking

A. Design

Concrete kicker blocks and thrust blocks shall be sized for the internal static water pressure of 150 psi plus 100 psi water hammer. The thrust blocks shall be designed to allow the thrust forces in the pipeline to be borne by the adjacent soils without allowing a failure in the pipeline. For design purposes, all soils are assumed to be classified as Type C soil as defined in ASTM D2488.

B. Construction

The thrust block shall be constructed against the vertical face of undisturbed earth or sheeting left in–place. The concrete shall not encase joints or bolts in the piping.

The thrust block shall be constructed to allow the hydrant to drain.

The required surface bearing area is provided below

Minimum Soil Bearing Surface Area (ft2) (Assuming 3,000 psi Soil Bearing Capacity)				
Pipe Size	Horizontal Bends			Tee or Dead End
	22–1/2°	45°	90°	
6"		6	8	6
8"		6	8	6
12"	4	6	11	8
16"	6	11	22	15
20"	9	18	36	24
24"	13	27	50	36
30"	20	45	76	57
36"	31	59	115	80

9.16 Pipe Joint Restraint Devices

Joint restraint devices shall be used at all bends and fittings in–place of thrust blocks as specified in CW Standard Practice Drawing "O"–Installation of Restraints. Joint restraint devices shall be required for the following installations:

A. Fire Hydrants

B. Bends

C. Reducers

D. Line Valves

E. Fittings

F. Blowoffs

G. Dead–ends

9.17 Installation of Tracing Wire and Identification Ribbon

Contractor shall install tracing wire along all pipe installations. Contractor shall install identification ribbon along all pipe installations.

A. #10 gauge solid copper tracing wire shall be laid directly on top of the water main. The wire shall be attached to the pipe at a maximum of 20' intervals.

C. The Contractor shall ensure that the tracing wire attached to the main is functional. The results of continuity test shall be documented and forwarded to the Utility. All said activities shall be conducted after the main installation has been completed and prior to final connection. If additional continuity testing is required, the Developer shall be required to pay all related costs on a time and material basis. The project will not be released for service connection until continuity testing has been properly demonstrated and documented to the Utility.

D. At each valve and hydrant, the tracing wire shall be brought to the point as specified herein. At hydrants, the tracing wire shall be connected to the below the 4 1/2" nozzle. The tracing wire shall be taped to the hydrant barrel as it is brought to ground level. At valves, the tracing wire shall be brought to 18" below grade on the outside of the riser. A 1/2" diameter hole shall be cut in the side of the riser and the tracing wire looped and knotted on the inside of the riser to keep the tracing wire at this elevation. A minimum 24" loop of tracing wire shall be left inside of the valve box riser. The tracing wire shall continue down the valve box in a continuous run to the pipe on the opposite side of the valve.

E. A tracing station shall be provided at all changes from metallic to non–metallic (including concrete) pipe where there is not a hydrant or valve adjacent to the transition, as specified in CW Standard Practice Drawing "R"–Tracing Station.

F. The tracing wire shall be made continuous by use of connections. These connections shall be made with a standard solder connect with a waterproof seal, or equivalent. Where all coupling connections are made in the tracing wire, an overhand loop knot shall be made to prevent the coupling from being pulled apart. The connections shall be taped with electrical moisture sealant patches.

G. If the trench is less than 2' wide, the Contractor shall install an identification ribbon to the side of the ditch wall with staples at 10 foot intervals, 1' to 2' below grade.

H. If the trench is wider than 2' wide, the Contractor shall install an identification ribbon directly over the water main at a depth of 24 below finished grade and maintain location during backfilling procedures.

I. In paved areas, the ribbon shall be installed directly under the pavement base.

9.18 Polyethylene Wrap

Polyethylene wrap shall be installed in accordance with AWWA C105.

A. Cross–laminated 4 mil polyethylene wrap for DI main installation shall be cut 2' longer than a standard length of pipe. The tube shall be slipped over the pipe, and centered to allow 1' of overlap on each adjacent pipe section. After the lap is made, the slack in the tubing shall be taken up for a snug fit, and the overlay shall be secured with a polyethylene tape, as described in Section 7.15, "Polyethylene Encasement".

B. All metallic appurtenances shall be encased in polyethylene and all seams and joints shall be secured with polyethylene tape.

C. The Contractor shall repair and/or replace the polyethylene wrap, whenever any modifications are made to the main.

9.19 Charging, Flushing, Air Removal and Hydrostatic Testing

The water main shall be charged with water from an existing Utility facility, as directed by the Utility. The Contractor shall conduct the flushing, air removal and hydrostatic testing as specified in Appendix E–Construction Testing Methods.

9.20 Disinfection of Water Mains and Service Lines

A. Disinfection

All pipe installed by a contractor shall be disinfected in accordance with AWWA C651 and all applicable Federal, State and Local requirements. The disinfection process shall be conducted as specified in Appendix E–Construction Testing Methods. If required, the trench/point(s) of access shall be prepared in such a manner as to comply with all applicable OSHA regulations and as directed by the Utility.

The chlorination point and supply shall be accessible above grade.

B. Bacteriological Samples

The Utility will collect water samples for bacteriological testing. The main will not be approved for final connection to the existing distribution system until sampling results are obtained and approved by the Utility.

Sampling requirements for service lines 2" and larger shall be conducted consistent with AWWA C651.

9.21 Connection with Existing Distribution System

A. General Information

The Contractor shall connect the water main(s) and/or service line(s) to the existing distribution system as directed by the Utility, in order to flush the new main. The final connection shall be performed in the presence of the Utility.

Any existing appurtenances (e.g., valves, blow–off assemblies, etc.) shall be operated by the Utility only. If final connection has not been completed within 60 days after sterilization, the main shall be disinfected, as described herein before final connection will be authorized by the Utility – If Applicable.

B. Removing Existing Plugs for Connections

To assure that all the pressure is off the main, the Utility will open the closest hydrant, blow–off assembly or service line. If there is no means of checking for pressure, a 3/4" tap shall be installed by the Contractor on the top of the main adjacent to the plug to be removed.

C. Main Connection

The dewatering of the main connection shall be properly completed to avoid contamination of new and existing mains.

The main connections shall be completed within a 12–hour period, without interruption.

D. Customer Notification

All customers potentially affected by a temporary interruption of water service shall receive a notification of the pending interruption as described in Section 9.01.C.

E. Connection with Existing Services

The contractor may not connect a new service line to any existing pipe unless directed by the Utility. The contractor shall schedule the service connection at a minimum of 24–hour advance notice. The service connection shall not be backfilled without being inspected and approved by the Utility.

Westfield shall utilize the following website for scheduling service connections. http://www.citizensenergygroup.com/Citizens–Westfield#Permits

9.22 Restoration

A. General Requirement

Refer to Appendix K – "Restoration"

B. Maintenance

Upon completion of the project, the Contractor/Developer shall maintain the surfaces of curbs and gutters, paved surfaces, sidewalks, and grass areas for a period of three (3) years thereafter, or for such greater period as may be required by Federal, State or Local authorities.

In unpaved areas, the Contractor shall maintain the surface of the disturbed trench area for a minimum of three (3) years after completion of the project. Any settling of the trench below the grade of the adjacent undisturbed areas shall be corrected by bringing additional topsoil in to raise the trench surface to the same level as the adjacent ground. Reseeding of these raised areas shall be performed in order to provide a uniform finished surface.

9.23 Additional Items

A. All water used on a project shall be metered. Only hydrant wrenches shall be used for opening and closing fire hydrants. In no case shall pipe wrenches be used for this purpose.

B. The Condition of the jobsite is the responsibility of the Contractor/Developer. Debris and rubbish material shall become the property of the Contractor/Developer and it shall be the Contractor/Developer's responsibility to dispose of such material.

C. The Contractor/Developer shall be responsible for scheduling all hydrostatic tests, initial connections and final connections. Should the Contractor/Developer cancel and reschedule these procedures and cause additional costs to the Utility in doing so, the Developer shall be responsible for all corresponding costs.

9.24 Construction Record Measurements

Construction records of all water main installations and appurtenances shall be made during and after construction of the project and provided to the Utility. Construction record measurements shall be made according to the following criteria:

Offset measurements shall be made to all fittings, valves, blow–off assemblies, hydrants and other appurtenances. The first measurement shall be made from the centerline of the nearest street running parallel to the installed water main, thence perpendicular to the centerline of the appurtenance on that water main. The second or cross–measurement shall be made from the nearest centerline of a street running in a perpendicular or near perpendicular direction to the water main, thence perpendicular to the centerline of the appurtenance Should a nearby street not be available for reference measurement, a permanent structure may be used and referenced to another permanent structure or street intersection or centerline.

A. All installed pipe sizes shall be listed and the length measured along the centerline of the pipe.

B. All materials manufacturer information shall be listed.

C. All easement locations, types, and dimensions shall be included.

D. Projects utilizing fusing, all Datalogger information in the correct format.

E. For GPS–related information, refer to Appendix B–Water Distribution Plans.

F. All records to be submitted to: Citizens Water, 2150 Dr. Martin Luther King Jr. Street, Indianapolis, IN 46202.

9.25 Dry Main Installation

The installation of a dry main shall adhere to all applicable subsections of Section 9.0– Construction Methods for Water Main Installation including the following requirements;

A. A dry main installation project shall require a separate contract and maintenance bond.

B. All dry mains shall be subject to all applicable inspection fees.

C. Dry mains shall be constructed with the same material designed for the rest of project.

D. The start and ending points shall be closed using a mechanical joint plug or fusible mechanical joint connection (commonly referred to as a "Harvey Connection") if installing HDPE pipe.

E. An access point shall be installed at the starting and ending points of the dry main to relieve possible pressure and for accessing of tracing wire (e.g., blow–off, flushing hydrant, etc.)

F. All connections to a dry main shall be inspected by the Utility during the construction of the connection.

9.26 Service Line Repairs on Warranted Work

A. Materials

The contractor shall be responsible for repairing or replacing failed materials for a period of three (3) years after the in–service date.

B. Workmanship

The contractor shall be responsible for the repair of service line failures due to faulty workmanship. There shall be no time constraint for repairs due to faulty workmanship. When a customer is out–of–service due to a failure, the contractor shall supply the customer with temporary water service until repairs are complete. The repairs shall be completed within a 24–hour period, unless approved by Utility. If the necessary repairs are not completed within 72 hours, the Utility shall make the repairs at the contractor's cost.

9.27 Service Line Safety Issues

The contractor shall be required to comply with all applicable safety standards.

A. Traffic Control

The contractor shall provide traffic control as required by Federal, State or Local authorities.

B. Support of Existing Utilities and Structures

The contractor shall protect, support and adequately maintain all existing utilities, structures, drains, sewers and other obstructions encountered during project installation. The contractor shall furnish these items at their own expense.

The contractor shall immediately notify the owner of any damage made to their facilities. Such damage shall be repaired in accordance with the directive, and to the satisfaction, of the directing owner. All repairs shall be at the contractor's expense.

C. Hazardous Atmosphere

It shall be the responsibility of the contractor to comply with all Federal, State and Local requirements when working in environments that may expose them to hazardous atmospheres.

D. Safety Chains and Backhoe Hooks

All safety chains and backhoe hooks shall be OSHA approved.

E. Competent Person On–Site

The contractor shall be responsible for having a competent person on–site for the duration of the work being performed.

F. The Utility will not perform any required work, until all applicable safety conditions are met. The Utility shall be reimbursed for all costs corresponding to any additional work.

NOTE:
WATER SPECIFICATIONS, AS LISTED, ARE PER:
CITIZENS ENERGY GROUP
1220 WATERWAY BOULEVARD
P.O. BOX 1220
INDIANAPOLIS, IN 46206

10505 N. College Avenue
Indianapolis, Indiana 46280
weihe.net
317 | 846 - 6611
800 | 452 - 6408
317 | 843 - 0546 *fax*
ALLAN H. WEIHE, P.E., L.S. - FOUNDER
WEIHE ENGINEERS
Land Surveying | Civil Engineering
Landscape Architecture

PROJECT NO.: W15.0316
DWG NAME:
DESIGNED BY: RLW
DRAWN BY: RLW
CHECKED BY: BJS
DATE: 01.29.2016

REVISIONS AND ISSUES	DATE	BY
SUBMITTED FOR COUNTY SURVEYOR REVIEW	10.16.2015	BJS
ISSUED FOR TAC REVIEW	01.29.2016	BJS

STEVEN SCOTT RUCKER REGISTERED PE 11300279 STATE OF INDIANA PROFESSIONAL ENGINEER
APPROVAL PENDING NOT FOR CONSTRUCTION

STEVEN SCOTT RUCKER P.E. 11300279

PREPARED FOR:
Culver's of WESTFIELD
17651 SUN PARK DRIVE, WESTFIELD, IN 46074

CITIZENS - WATER SPECIFICATIONS
Part of SW/4, Section 36, Township 19 North, Range 3 East, Washington Township, Hamilton County, Indiana

SHEET NO.
C902

PROJECT NO.
W15.0316

LOCATION: H:\2015\w150316\Engineering\design\conset\w150316-C902 water specs.dwg
LAYOUT: C902
DATE/TIME: January 28, 2016 - 2:46pm
PLOTTED BY: schoeffb

SECTION 7.0

MATERIAL REQUIREMENTS FOR WATER MAINS

7.01 General

The Developer and/or Contractor shall furnish all pipeline materials necessary for the complete installation and associated construction of all Developer installed water mains and appurtenances. All materials shall be new or in a condition that complies with the Standards.

The Utility shall review and consider changes to the material type and suppliers and manufacturers on an as needed basis. All materials shall be tested and verified that they meet all applicable American Water Works Association (AWWA), American National Standards Institute (ANSI), American Society of Testing and Materials (ASTM), Underwriters Laboratories (U/L) and National Sanitation Foundation (NSF) Standards, as well as all applicable Local, State and Federal laws.

7.02 Polyvinyl Chloride (PVC) Pipe (6" and 8" Diameter)

All PVC pipe shall be of a blue tint and conform to the latest edition of ANSI/AWWA C900. The pipe shall have the same outside diameter as ductile iron pipe. Materials from which the pipe was manufactured shall have been tested and approved for conveying potable water by the NSF and U/L. All PVC pipe shall be marked with the U/L logo. Where fittings are required, DI fittings shall be used (refer to Section 7.03 – Ductile Iron Pipe and Fittings", Subpart B-D & F, Joints).

A. Wall Thickness, Small Pipe

Pipe wall thickness for 6" and 8" pipe shall be as required to provide a minimum wall thickness of DR 18 for Pressure Class 150, as defined by ANSI/AWWA C900.

B. Joints

Joints for PVC pipe shall be slip-on type with integral bell and spigot. Gasket lubricant shall be as specified by the pipe manufacturer.

C. Use of PVC 12" and larger shall require approval by the Utility.

7.03 Ductile Iron Pipe and Fittings

A. Ductile Iron (DI) Pipe

Unless indicated otherwise on the construction plans, all 6" through 12" diameter pipe shall be Class 350; 16" through 24" diameter pipe shall be Class 250; complete with all accessories specified in Section 7.03 Ductile Iron Pipe and Fittings and conforming to ANSI/AWWA C151/A21.51 with polyethylene encasement (refer to Section 7.15, "Polyethylene Encasement"). The joint shall Section 7.0 – Material Requirements for Water Main Installation be of the push joint (PJ) type conforming to ANSI/AWWA C111/A21.11. Gaskets shall be Tyton Type and conform to ANSI/AWWA C111/A21.11. Gasket lubricant shall conform to ANSI/AWWA C111/A21.11. The pipe shall be cement mortar lined in accordance with ANSI/AWWA C104/A21.4 and shall be coated outside with a bituminous coating.

B. Ductile Iron Fittings

Ductile iron fittings shall be complete with all accessories (refer to Section 7.03.D) and shall conform to ANSI/AWWA C110/A21.10, 350 pounds per square inch (psi) pressure rating requirements.

All fittings shall be cement mortar lined conforming to ANSI/AWWA C104/A21.4 and shall be coated outside with a bituminous coating or fusion-bonded epoxy.

Fittings shall have distinctly cast into the pipe exterior the pressure rating and letters "DI" or "DUCTILE". All DI fittings acceptable to the Utility shall be rated at a minimum of 70-50-05 (ksi tensile strength-ksi yield strength-percent elongation), in accordance with ANSI/AWWA C110 standards regarding strength of materials.

Fitting joints shall be of the standard mechanical joint (MJ) type conforming to ANSI/AWWA C111/A21.11 or push joint (PJ) type conforming to ANSI/AWWA C111/A21.11.

All T-head bolts shall be in accordance with AWWA C111/A21.11.

C. Compact Ductile Iron Fittings

Lightweight DI, MJ, or PJ type fittings shall conform to ANSI/AWWA C153/A21.53 and may be used at the Contractor's option. Fitting wall thickness shall meet or exceed ductile iron Class 53 and shall have a working pressure rating of 350 psi.

All fittings shall be cement mortar lined conforming to ANSI/AWWA C104/A21.4, and shall be coated outside with a bituminous or fusion bounded epoxy coating.

All T-head bolts shall be in accordance with AWWA C111/A21.11.

D. Mechanical Joint Fitting Accessories

MJ fitting accessories shall consist of gaskets, glands and T-head bolts with nuts.

MJ fitting accessories shall conform to ANSI/AWWA C111 A21.11.

E. Special Gasket Material for Ductile Iron Pipe

In construction areas where contaminated soils exist or existing steam utility lines are installed, ductile iron pipe shall be required for installation with Viton gaskets in the pipe as approved by the Utility. Gasket lubricant shall be as specified by the pipe manufacturer.

7.04 Polyethylene (HDPE) Pipe and Fittings (3" through 24" Diameter)

A. Polyethylene Pipe

Polyethylene pipe shall conform to ANSI/AWWA C901 and ANSI/AWWA C906. Material used in the manufacture of HDPE pipe shall conform to the PE Standard Code PE 3408. All HDPE pipe shall have the same outside diameter as DI pipe with the exception of 3" pipe, where iron pipe size shall be used.

All distribution network HDPE pipe shall have a blue shell or a minimum of six (6) longitudinal blue stripes, the AWWA specification stamp embedment or permanent blue-line print.

All well line HDPE pipe shall have a purple shell or a minimum of six (6) longitudinal purple stripes, the AWWA specification stamp embedment or permanent purple-line print.

B. Wall Thickness

Distribution network piping minimum pipe wall thickness shall be Standard Dimension Ratio (SDR) 13.5 for pipe 6" through 24" in diameter and SDR 11 for pipe 3" in diameter.

Well line piping shall be a minimum of SDR 17 or as required by the design and

approved by the Utility.

C. Polyethylene Fittings

HDPE fittings shall utilize the same DR as the pipe being installed.

D. Mechanical Joint Adapters for use on Polyethylene Pipe

All polyethylene mechanical joint adapters:

- Shall consist of one (1) piece construction from solid billet polyethylene.
- Shall include a stainless steel integrated stiffener for sizes 16 through 24 .
- Shall utilize the same DR as the pipe being installed and ductile iron pipe size (DIPS)
- Shall be of ductile iron pipe outside diameter.
- Shall allow sufficient clearance for full swing of butterfly valve action of disc.
- Shall include complete mechanical joint (MJ) accessory kit including:
  - o C110 full body, MJ heavy gland or machined steel gland of equal thickness.
  - o Sufficient number and length MJ T-head bolts and nuts.
  - o Standard MJ gasket.

7.05 Valves

Gate Valves

A. See Table 7.05.1 below for opening orientation by Territory Area

B. Manufacturer(s) (Model) or CEG Approved Equal
Mueller (Resilient Wedge Model)

Tapping Valves

A. See Table 7.05.1 below for opening orientation by Territory Area

B. Manufacturer(s) (Model) or CEG Approved Equal
Mueller (Resilient Wedge Model)

Butterfly Valves

A. See Table 7.05.1 below for opening orientation by Territory Area

B. Manufacturer(s) (Model) or CEG Approved Equal
Mueller (Pratt)

Table 7.05.1: Valve Opening Orientation

CW Territory				
Marion County & Surrounding Areas	Noblesville	East Morgan County	Southern Madison	Westfield
Valve Orientation	Open Right (Clockwise)	Open Right (Clockwise)	Open Left (Counterclockwise)	Open Left (Counterclockwise)

7.06 Tapping Sleeves

A. Tapping Sleeves (Stainless Steel)

1. All taps on PVC, ductile iron, and cast iron pipe shall utilize stainless steel tapping sleeves.
2. The sleeve body shall be manufactured entirely of stainless steel for total corrosion control. All welds shall be fully passivated to restore stainless characteristics.
3. The gasket shall be gridded, virgin GPR compounded for water service. The gasket shall be of SBR per ASTM D 2000 MBA710 glued into the face of the flange. The full gasket shall give 360 degrees pipe coverage.
4. The flange shall conform to ANSI/AWWA C207 Class D, 150 lb. drilling. The flange shall be stainless steel with recess to accept standard tapping valves.
5. The bolts and nuts shall be stainless steel with non-corrosive (NC) threads. The hex nuts shall be fluorocarbon coated with plastic lubricating washers.
6. All flanged joint fitting accessories shall conform to Section 7.06 "Tapping Valves", Subpart D "Flanged Joint Fitting Accessories," and all bolts and nuts shall be in accordance with ANSI Type 304 or 316 stainless steel.
7. A hydrostatic test of 150 PSI for a minimum of 10 minutes shall be performed between the sleeve and valve before tapping pipe.
8. All tapping sleeves and metallic pipe are to be wrapped with polyethylene encasement as specified in Section 7.15, "Polyethylene Encasement".

B. Manufacturer(s) (Model) or CEG Approved Equal

Ford (FAST), JCM Industries (Model 432), & Smith Blair through 12'' main size (Model 663)

7.07 Hydrants

A. Specifications

Table 7.07.1: Fire Hydrant Specifications:

	CW Territor				
	Marion County & Surrounding Areas	Noblesville	East Morgan County	Southern Madison	Westfield
Operating Threads	Isolated from Potentially Corrosive Environments and lubricated with Food Grade Lubricant				
Operating Nuts	National Standard Pentagon				
Hydrant Orientation	Open Right (Clockwise)	Open Right (Clockwise)	Open Right (Clockwise)	Open Left (Counterclockwise)	Open Left (Counterclockwise)
Valve Opening	5-1/4"				
Steamer Nozzle	4-1/2" ID x 5.375" OD x 6 Threads per	Storz	4-1/2" ID x 5.375" OD x 6 6 Threads per	Storz	Storz
Hose Nozzles	(2) 2-1/2" (7-1/2 National Standard Threads per Inch)				
Steamer Nozzle	(1) 4-1/2"				
Nozzles out	Screwed or Locked into Upper Section, Sealed with O-Ring, & a pin or screw to prevent backing				
Upper Valve					
Plate Main Valve	Bronze				
Seat	Bronze to Bronze Threads				
Mechanical Stop	Yes				
Weep/Drain Holes	Yes				
Epoxy Coat	Lower Valve plate & Interior Parts of Hydrant Shoe				
Bury Depth	5' Bury Depth on all Mains 12" and Smaller				
Barrel	6' Bury Depth on all Mains 16" and Larger				
Extensions	No, Unless Approved by the Utility				
Lower Barrel	Ductile Iron				
Tracing Wire Connection	Yes, Loop Ring				
Approved Utility Hydrant Color (7-8 Mil Thickness)	Blue/Green w/ Reflective White Paint on Bonnet Flange	Yellow	Red	Silver	Red
Approved PrivateE Hydrant Color*	Red or Yellow				
Hydrant Cap Chains	Remove from Hydrant				
Storz Connections	Per Municipal or Fire Department Requirements				

* Upon Final Approval by the Utility

B. Manufacturer(s) (Model) or CEG Approved Equal
Mueller (Super Centurion 250 Model)

7.08 Valve Box, Lid and Riser

A. Cast Iron Valve Box and Lid

Special Utility CI valve box and lid shall be installed for each valve and blow-off assembly with a plastic riser, as specified in Standard Practice Drawing "G"- Standard 8" Valve Box and Cover.

Westfield – CI, 2 piece, valve box per ASTM A48, Class 30B with "Water" embossed on CI lid.

B. Valve Box Riser

A solid ribbed 8" diameter PVC riser shall be required and shall be centered over the valve. If the valve is 6' deep or greater, a valve nut extension shall be provided to bring the operating nut to a depth 4' below finished grade.

Westfield – 5 ¼" diameter screw type shafts.

C. Manufacturer(s) (Model) or CEG Approved Equal

Star Pipe Products (8"– VBIWCT (Frame) and VBIWCLID (Lid))

Sigma Corporation (5-1/4"– VB-2684B (Frame) and VB-2684L (Lid))

Westfield-Star Pipe Products (5-1/4"– VB564S (Full Body), VBLIDW (Lid))

7.09 Blow-off Assembly (3" through 24" Water Mains)

A. The blow-off assembly (refer to Standard Practice Drawing "J"-2" Blow-Off Assembly for 3" through 8" Main and Standard Practice Drawing "K"-2" Blow-Off Assembly for 12", 16", 20", and 24" Main) shall be of an automatic freeze-proof design with a drain/weep hole drilled within a 2" ball valve. Valve shall be 600-lb. WOG bronze body with chrome plated brass ball with Teflon seals and stainless steel bolts.
Westfield – Shall utilize temporary hydrants as blow-offs.

Cul-de-sac: blow-off's shall be allowed if the distance is less than 300' of 3" pipe. All other applications shall require flushing hydrants.

B. Manufacturer(s) (Model) or CEG Approved Equal

- Gil Industries

7.10 Blow-off Assembly (30" and Larger Water Mains)

A. As specified in the Utility approved project construction detail drawing.
Westfield – Shall utilize temporary hydrants as blow-offs.

B. Manufacturer(s) (Model) or CEG Approved Equal

- Main sizes above 24'' will be determined during preliminary design

7.11 Air Release Valves (16", 20", and 24" Water Mains)

Details and requirements of these fabricated assemblies are specified in Standard Practice Drawing "M"-Air Relief Apparatus for Polyethylene Water Main Standard Practice Drawing "N"-Air Relief Apparatus for PVC and Ductile Iron Water Main.

A. All air release valves shall have cast iron bodies with stainless steel floats.

B. Manufacturer(s) (Model) or CEG Approved Equal

- Valmatic Model 15A.3SV

7.12 Mechanical Joint Restraint Devices

A. Joint restraint devices shall be used at all bends and fittings as well as thrust blocks (refer to Standard Practice Drawing "O"-Installation of Restraints). Joint ends shall be PJ type or MJ.

B. Manufacturer(s) (Model) or CEG Approved Equal

- Ebaa Iron

7.13 Ductile Iron Bell Joint Restraint Devices

A. Ductile Iron Bell Joint restraint devices shall be used at all bell and spigot joints and shall consist of one (1) wedge actuated restraint and (1) split ductile iron ring (refer to Standard Practice Drawing O -Installation of Restraints).

B. Manufacturer(s) (Model) or CEG Approved Equal

- Ebaa Iron (1700 Series)

7.14 PVC Bell Joint Restraint Devices

A. PVC Bell Joint restraint devices shall be used at all bell and spigot joints and shall consist of two (2) split, serrated restrainers (refer to Standard Practice Drawing "O"-Installation of Restraints).

B. Manufacturer(s) (Model) or CEG Approved Equal

- Ebaa Iron (1900 Series), Star (1100 Series), Ford (1390 Series)

7.15 Polyethylene Encasement

A. Cross-Laminated Polyethylene Encasement

High density cross-laminated polyethylene encasement materials shall be used for ductile iron pipe and fittings. The high density cross-laminated polyethylene tube material shall conform to ANSI/AWWA C105 with a minimum thickness of 4 mils.

B. Tube Diameter

The minimum tube size for each pipe diameter shall be as follows:

Nominal Diameter	Polyethylene Flat Tube Width
3"– 8"	20"
12"– 14"	30"
16"– 20"	41"
24"	54"
30"	67"
36"	81"

C. A 2" wide polyethylene tape shall be used for repairs and circumferential joints. The polyethylene tape shall have a minimum thickness of 12 mil.

D. Limits of Casing (from the Utility's main to the end of casing)

8' separation from edge of main to end of casing (4 and larger)

7.16 Service Saddles and Corporation Stops

A. Service Saddles

1. Saddle casting shall be DI per ASTM A536 covered by a black nylon fusion coat or polyethylene coat a minimum of 10 mils thick.
2. Band shall be double strap stainless steel per ASTM A240 type 304, 1 1/2 minimum total band width to spread out clamping forces on pipe.
3. All bolts shall be Type 304 stainless steel per ASTM A192. Threads shall be Teflon coated to reduce friction.
4. Nuts shall be heavy hex, stainless steel per ASTM A193 Type 304.
5. All gaskets shall be virgin WBR per ASTM MBC 610.

B. Corporation Stop (Tap) – 3/4 through 2"

1. Tap shall be easy turning, O-ring sealed, balanced pressure plug valve having a round, full-open, unobstructed flow way.
2. Body shall be one (1) piece with integral wrench slats.
3. Operating head shall be large enough to provide adequate wrench gripping area.
4. O-rings on top and bottom shall be provided to seal the valve.
5. Threads shall be AWWA taper on inlet.
6. Outlet shall be a compression connection, except 1 1/2" and 2" where FIP shall be provided.
7. Shall be plug style valves.
8. Shall be quarter-turn operation.

7.17 Tracing Wire

A. In open trench installations, #10-guage solid copper tracing wire, blue in color, shall be attached directly on top of the water main.

B. When tracing wire is required during directional bore installations, for lines 4" or larger, a minimum of (2)#10 gauge solid copper tracing wire, blue in color, shall be required. The wire and HDPE line shall be attached to the main at 10 foot intervals.

C. Tracing wire shall meet the following specifications:

- Direct Burial, 21% Conductivity Clad Steel Conductor, Soft Drawn High Strength Tracer Wire
- 600# Average Tensile Break Load
- Surface Legend Print On Insulating Jacket Printed At A Minimum Of Every 2 Linear Feet
- 30 Mm, Blue, High Molecular Weight-High Density Polyethylene Jacket Per ASTM D1248
- 30 V Rating

7.18 Identification Ribbon

A. The marking tape shall be, non-detectable, blue in color and state, in permanent black letters, Caution Buried Water Line Below . The tape shall be a minimum of 3" wide and be placed 24" below finished grade.

7.19 Casing Pipe

Details and requirements of these fabricated assemblies are shown on Standard Practice Drawing "I"-Typical Boring Casing Pipe.

A. General

The inside diameter (ID) of the casing pipe shall be at least 12" greater than the

outside diameter (OD) of the carrier pipe joints or couplings.

B. Steel Casing Pipe

Steel casing pipe shall be bare-wall, spiral-welded steel pipe meeting ANSI/AWWA C206 with a minimum yield strength of 35,000 psi. Minimum wall thickness shall be as listed in the following table:

Casing Outside Diameter	State Highway Crossings Casing Wall Thickness	Railroad Crossing Casing Wall Thickness
24"	0.312"	0.406"
30"	0.375"	0.469"
36"	0.500"	0.532"
42"	0.500"	0.563"
48"	0.625"	0.625"
54"	0.625"	0.688"
60"	0.625"	0.750"

Casing pipe for other applications shall comply with all local governmental standards and regulations. A minimum wall thickness of 3/8" shall be required.

Jack pipe shall be constructed as to prevent leakage of a substance from the pipe throughout the entire length. Pipe casing shall be beveled by square end.C.

C. Polyethylene Casing Pipe

HDPE casing pipe shall be SDR-13.5, PE3408 per AWWA C906, where approved by the Utility. Per INDOT standards, HDPE pipe shall only be utilized as casing pipe up to 24'' unless otherwise approved by the Utility.

7.20 Vaults

A. Manufacturer(s) (Model) or CEG Approved Equal

Hartford Concrete Products Inc. and McCreary Concrete Products Inc.

SECTION 8.0

MATERIAL REQUIREMENTS FOR SERVICE LINES

8.01 General

The Contractor/Plumber shall furnish all materials necessary for the complete installation and associated construction of the service lines and all related appurtenances, except for corporation stops, tapping sleeves, tapping valves and the meter connection when connecting to Utility owned mains. The Contractor/Plumber shall furnish corporation stops, tapping sleeves, and tapping valves when connecting to a private main. The Utility will supply the meter connection for all service lines. All materials shall comply with the Standards.

The Utility will review and consider additions/deletions and changes to these material requirements on an as needed basis. All service line material for PVC water mains must be of like material. All materials shall be tested and verified that they meet all applicable AWWA/ANSI/ASTM/NSF standards, as well as all applicable Local, State and Federal laws.

8.02 Polyvinyl Chloride (PVC) Pipe (4" through 8" Diameter)

All PVC pipe shall be of a blue tint and conform to the latest edition of ANSI/AWWAC900. The pipe shall have the same outside diameter as ductile iron pipe. Materials from which the pipe is manufactured shall have been tested and approved for conveying potable water by the NSF and the U/L. All PVC pipe shall be marked with the U/L logo. Where fittings are required, DI fittings shall be used as specified in Section 8.03 "Ductile Iron Pipe and Fittings". All service lines above 8" shall be DI or HDPE.

A. Wall Thickness, Small Pipe

Pipe wall thickness for 4", 6" and 8" pipe shall be as required to provide a minimum wall thickness of DR 18 for Pressure Class 150, as defined by ANSI/AWWA C900.

B. Joints

Joints for PVC pipe shall be slip-on type with integral bell and spigot. Gasket lubricant shall be as specified by the pipe manufacturer.

8.03 Ductile Iron Pipe and Fittings

A. Ductile Iron (DI) Pipe

Unless indicated otherwise on the construction plans, all 6" through 12" diameter pipe and larger shall be Class 350, 16" through 24" diameter pipe and larger shall be Class 250; complete with all accessories and conforming to ANSI/AWWA C151/A21.51 with polyethylene encasement (refer to Section 7.15, "Polyethylene Encasement"). The joint shall be of the push joint (PJ) type conforming to ANSI/AWWA C111/A21.11. Gasket lubricant shall conform to ANSI/AWWA C111/A21.11. The pipe shall be cement mortar lined in accordance with ANSI/AWWA C104/A21.4 and shall be coated outside with a bituminous coating.

B. Ductile Iron Fittings

Ductile iron fittings shall be complete with all accessories and shall conform to ANSI/AWWA C110/A21.10, 350 pounds per square inch (psi) pressure rating requirements.

All fittings shall be cement mortar lined conforming to ANSI/AWWA C104/A21.4 and shall be coated outside with a bituminous coating or fusion-bonded epoxy.

Fittings shall have distinctly cast into the pipe exterior the pressure rating and letters "DI" or "DUCTILE". All DI fittings acceptable to the Utility shall be rated at a minimum of 70-50-05 (ksi tensile strength-ksi yield strength-percent elongation), in accordance with ANSI/AWWA C110 standards regarding strength of materials.

Fitting joints shall be of the standard mechanical joint (MJ) type conforming to ANSI/AWWA C111/A21.11 or push joint (PJ) type conforming to ANSI/AWWA C111/A21.11.

All T-head bolts shall be in accordance with AWWA C111/A21.11.

C. Compact Ductile Iron Fittings

Lightweight DI MJ or PJ type fittings shall conform to ANSI/AWWA C153/A21.53 and may be used at the Contractor's option. Fitting wall thickness shall meet or exceed ductile iron Class 53 and shall have a working pressure rating of 350 psi.

All fittings shall be cement mortar lined conforming to ANSI/AWWA C104/A21.4, and shall be coated outside with a bituminous or fusion bounded epoxy coating.

All T-head bolts shall be in accordance with AWWA C111/A21.11.

D. Mechanical Joint Fitting Accessories

MJ fitting accessories shall consist of gaskets, glands and T-head bolts with nuts.

MJ fitting accessories shall conform to ANSI/AWWA C111 A21.11.

E. Special Gasket Material for Ductile Iron Pipe

In construction areas where contaminated soils exist or existing steam utility line may be installed, ductile iron pipe shall be required for installation with special gaskets in the pipe as approved by the Utility. Gasket lubricant shall be as specified by the pipe manufacturer.

8.04 Polyethylene (HDPE) Pipe and Fittings (3/4" through 2" Diameter)

A. Polyethylene Pipe

Polyethylene pipe shall conform to the latest edition of ANSI/AWWA C901 and ANSI/AWWA C906. Material used in the manufacture of HDPE pipe shall conform to the PE Standard Code PE 3408. All HDPE pipe –" through 2" shall have the same outside diameter as copper tubing.

All HDPE pipe shall either be a blue shell with the AWWA specification stamp embedment or black shell with permanent blue-line print.

B. Wall Thickness

3/4" and 1-1/4" minimum pipe wall thickness shall be SDR 9.

1 ½" through 2" minimum pipe wall thickness shall be SDR 11.

C. Joint Adapters for use on Polyethylene Pipe

Shall consist of one (1) piece construction from solid billet polyethylene

All mechanical joint adapters shall be compression stop fittings to conform to AWWA C800.

Shall include a solid stainless steel stiffener for all sizes

8.05 Polyethylene (HDPE) Pipe and Fittings (3" through 12" Diameter)

A. Polyethylene Pipe

Polyethylene pipe shall conform to the latest edition of ANSI/AWWA C901 and ANSI/AWWA C906. Material used in the manufacture of HDPE pipe shall conform to the PE Standard Code PE 3408. All HDPE pipe shall have the same outside diameter as DI pipe with the exception of 3 pipe, where iron pipe size shall be used.

All distribution network HDPE pipe shall have a blue shell or a minimum of six (6) longitudinal blue stripes, the AWWA specification stamp embedment or permanent blue-line print.

All well line HDPE pipe shall have a purple shell or a minimum of six (6) longitudinal purple stripes, the AWWA specification stamp embedment or permanent purple-line print.

B. Wall Thickness

Distribution network piping minimum pipe wall thickness shall be Standard Dimension Ratio (SDR) 13.5 for pipe 6 through 24 in diameter and SDR 11 for pipe 3" in diameter.

Well line piping shall be a minimum of SDR 17 or as required in the design

C. Polyethylene Fittings

All HDPE fittings shall be SDR 11 for pipe 6" through 24" in diameter. SDR 9 shall be used for 3" pipe diameter fittings.

D. Mechanical Joint Adapters for use on Polyethylene Pipe (ductile iron pipe size (DIPS) Dimension Ratio (DR) 13.5 & 11)

All polyethylene mechanical joint adapters:

- Shall consist of one (1) piece construction from solid billet polyethylene.
- Shall include a stainless steel integrated stiffener for sizes 16" through 24" (do not have to include stainless steel stiffener on sizes 6" through 12").
- Shall be rated at a DR11 and DR9 pressure rating (one (1) grade higher than pipe, DR of 13.5 and 11 respectively).
- Shall be of ductile iron pipe outside diameter, unless specified differently.
- Shall allow sufficient clearance for full swing of butterfly valve action of disc.
- Shall include complete mechanical joint (MJ) accessory kit including:
  - Ø C110 full body, MJ heavy gland or machined steel gland of equal thickness.
  - Ø Sufficient number and length MJ T-head bolts and nuts.
  - Ø Standard MJ gasket.

8.06 Copper Tubing and Fittings

A. Copper Tubing

All services installed within a one (1) square mile surrounding the City of Indianapolis, Indiana, in close proximity to steam lines or petroleum transport lines shall be copper. Particular attention shall be given to the Mile Square section of the City, the downtown area bounded by North, East, South and West Streets. The boundaries, as described above, shall be the only area copper tubing is permitted unless approved by the Utility. All other areas within the CW territory shall be polyethylene pipe/tubing. Copper tubing shall conform to the latest addition of ANSI/AWWA C800. Material used in the manufacture of copper tubing shall conform to the ASTM B 88 for Type K copper tubing. Copper tubing Type K shall be permanently marked (incised) in accordance with its governing specifications to show tube type, the name or trademark of the manufacturer, and the country of origin.

Westfield – Copper tubing shall be prohibited in Westfield unless otherwise approved by the Utility.

B. Copper Fittings

All copper fittings shall be compression stop fittings to conform to AWWA C800.

8.07 Galvanized Pipe and Nipples

Galvanized pipe and nipples shall not be used.

8.08 Brass Nipples and Fittings

All brass nipples and fittings shall be manufactured in accordance with ANSI/AWWA C800. All brass nipples and fittings shall be certified by an ANSI accredited test lab per ANSI/NSF Standard 61, Drinking Water Components-Health Effects and shall comply with the Safe Drinking Water Act, and the United States Environmental Protection Agency.

8.09 Gaskets

Special Gasket Material for Ductile Iron Pipe – in construction areas where contaminated soils exist or existing steam utility lines may be installed, ductile iron pipe shall be required for installation with special gaskets in the pipe as approved by the Utility. Gasket lubricant shall be as specified by the pipe manufacturer.

8.10 Dielectric Bushings

Dielectric bushings shall: be used when joining dissimilar metals to prevent galvanic action and corrosion; be suitable for the required working pressure; comply with the Safe Drinking Water Act, and the U.S. Environmental Protection Agency. Specifically, dielectric bushings shall be used when joining a metallic service line to ductile iron, or other metallic pipe, or water main.

8.11 Valves

Gate Valves

A. All 1 ½" and 2" gate valves shall be 200 psi, rising stem gate valves and shall conform to the requirements of ANSI/AWWA C509 or ANSI/AWWA C515. These valves are approved for buried and non-buried applications. All 4" and larger gate valves shall be 200 psi, ductile iron body, resilient-seated, tight closure gate valves with non-rising stems in accordance with all applicable requirements of ANSI/AWWA C509 or ANSI/AWWA C515. Non-rising stem gate valves are approved for direct bury applications only. Rising stem gate valves are not approved for buried applications.

Valve Ends

All 1 ½" and 2" gate valve ends shall be of the female iron pipe threads. All 4" and larger gate valve ends shall be of mechanical joint or flanged face type and shall conform to ANSI/AWWA C111/A21.11.

B. See Table 8.11.1 below for opening orientation by Territory Area

C. Acceptable Manufacturers

All manufacturers shall be approved by the Utility, as listed in Appendix L – 'Approved Manufacturers for Water Main Materials'.

Tapping Valves

A. See Table 8.11.1 below for opening orientation by Territory Area

B. Acceptable Manufacturers

All manufacturers shall be approved by the Utility, as listed in Appendix L – 'Approved Manufacturers for Water Main Materials'.

Table 8.11.1: Valve Opening Orientation

	CW Territory				
	Marion County & Surrounding Areas	Noblesville	East Morgan Copunty	Southern Madison	Westfield
Valve Orientation	Open Right (Clockwise)	Open Right (Clockwise)	Open Right (Clockwise)	Open Left (Counterclockwise)	Open Left (Counterclockwise)

8.13 Inlet and Outlet Valves

Inlet and outlet connections shall be 3/4" for 5/8" meter settings, 1" in size for 3/4" meter settings, 1 ¼" for 1" meter settings. The inlet sizes shall be a minimum of one (1) pipe size larger than the meter size for all other larger services.

A. Inlet Connections

1. Angle valves shall only be used on the inlet side of the water meter on service lines 3/4" to 1 ¼".
2. The angle valve shall be designed and manufactured as specified in ANSI/AWWA C800 regarding thread types and diameters. The valve shall be certified to be capable of withstanding a minimum working pressure of 150 psi with a pad-locked wing, a 90-degree rotating valve that opens counter clockwise (left).
3. All manufacturers shall be approved by the Utility.

B. Outlet Connections

1. Angle valve on the outlet side of the water meter shall be equipped with a shut-off handle.
2. The angle valve shall be designed and manufactured in accordance with the AWWA Standard C800 regarding thread types and diameters. The valve shall be certified to be capable of withstanding a minimum working pressure of 150 psi with a 90-degree rotating valve that opens counter clockwise (left).

Westfield – Refer to Appendix G for Westfield Standard Drawings for valve types.

8.14 Valve Box, Lid and Riser (>4" valves installed within public right-of-way or easements)

C. Cast Iron Valve Box and Lid

Special Utility CI valve box and lid shall be installed for each valve and blow-off assembly with a plastic riser as specified in CW Standard Practice Drawing "G"- Standard 8" Valve Box and Cover.

Westfield valve boxes see section 7.08.

D. Valve Box Riser

A solid ribbed 8 diameter PVC riser shall be required and shall be centered over the valve. If the valve is 6' deep or greater, a valve nut extension shall be provided to bring the operating nut to a depth 4' below finished grade.

Westfield valve boxes see section 7.08.

8.15 Valve Box, Lid and Riser (1 1/2" and 2" Curb Stops)

A. Cast Iron Valve Box and Lid

A Special Utility 5-1/4" CI valve box, lid, and plastic riser shall be installed for each 1 ½" and 2" curb stop

B. Valve Box Riser

A solid 4" diameter PVC riser will be required and shall be centered over the valve.

8.16 Blow-off Assembly (3" through 12" Service Lines)

A. The blow-off assembly (refer to CW Standard Practice Drawing "J"-2" and CW Standard Practice Drawing "K"-2") shall be of an automatic freeze-proof design with a drain/weep hole drilled within a 2" ball valve. Valve shall be 600-lb. WOG bronze body with chrome plated brass ball with Teflon seals and stainless steel bolts.

Westfield – Temporary hydrants shall be utilized for blow-offs.

8.17 Joint Restraint Devices

A. Joint restraint devices shall be used at all bends and fittings as well as thrust (refer to CW Standard Practice Drawing" "O"-Installation of Restraints). Joint ends shall be PJ type or MJ.

B. Cross-Laminated Polyethylene Encasement

High density cross-laminated polyethylene encasement materials shall be used for ductile iron pipe and fittings. The high density cross-laminated polyethylene tube material shall conform to ANSI/AWWA C105 with a minimum thickness of 4 mils.

Tube Diameter

The minimum tube size for each pipe diameter shall be as follows:

Nominal Diameter	Polyethylene Flat Tube Width
3" – 4"	20"
8"– 12"	30"

C. A 2" wide polyethylene tape shall be used for repairs and circumferential joints. The polyethylene tape shall have a minimum thickness of 12 mils.

8.18 Service Saddles and Corporation Stop

A. Service Saddles This section describes the use of JCM fabricated service saddle type, with the stainless steel double straps. CEG, and now Westfield are being requiring the use of the Ford bronze style saddles. This is a change that has just taken place.

1. Cast iron pipe sizes up to 20" diameter will require a service saddles. All PVC sizes will require a service saddle.
2. Saddle casting shall be DI per ASTM A536 covered by a black nylon fusion coat or polyethylene coat 10-12 mils thick.
3. Band shall be double strap stainless steel per ASTM A240 type 304, 1 ½" minimum total band width to spread out clamping forces on pipe.
4. All bolts shall be Type 304 stainless steel per ASTM A192. Threads shall be Teflon coated to reduce friction.
5. Nuts shall be heavy hex, stainless steel per ASTM A193 Type 304.
6. All gaskets shall be virgin WBR per ASTM MBC 610.
7. All manufacturers shall be approved by the Utility.

B. Corporation Stop (Tap) – 3/4" through 2"

1. Tap shall be easy turning, O-ring sealed, balanced pressure plug valve having a round, full-open, unobstructed flow way.
2. Body shall be one (1) piece with integral wrench slats.
3. Operating head shall be large enough to provide adequate wrench gripping area.
4. O-rings on top and bottom shall be provided to seal the valve.
5. Threads shall be AWWA taper on inlet.
6. Outlet shall be a compression connection, except 1 ½" and 2" where FIP shall be provided.
7. Shall be plug style valves.
8. Shall be quarter-turn.
9. All manufacturers shall be approved by the Utility.

8.19 Tracing Wire

In open trench installations, #10-guage solid copper tracing wire, blue in color, shall be attached directly on top of the water main.

When tracing wire is required during directional bore installations, for lines 4" or larger, a minimum of (2)#10 gauge solid copper tracing wire, blue in color, shall be required. The wire and HDPE line shall be attached to the main at 10 foot intervals.

All manufacturers shall be approved by the Utility, as listed in Appendix L-'Approved

Manufacturers for Water Main Materials'.

8.20 Identification Ribbon

The marking tape shall be blue in color and state "Caution Buried Water Line Below". The tape shall be a minimum of 3" wide and be placed 24" below finished grade.

8.21 Casing Pipe

Details and requirements of these fabricated assemblies are shown on CW Standard Practice Drawings "I"-Typical Boring Casing Pipe.

A. General

The inside diameter (ID) of the casing pipe shall be at least 12" greater than the

outside diameter (OD) of the carrier pipe joints or couplings.

B. Steel Casing Pipe

Steel casing pipe shall be bare-wall, spiral-welded steel pipe meeting ANSI/AWWA C206 with a minimum yield strength of 35,000 psi. Minimum wall thickness shall be as listed in the following table:

Casing Outside Diameter	State Highway Crossings Casing Wall Thickness	Railroad Crossing Casing Wall Thickness
24"	0.312"	0.406"

Jack pipe shall be constructed as to prevent leakage of a substance from the

pipe throughout the entire length.

Pipe casing shall be beveled by square end.

C. Polyethylene Casing Pipe

Casing pipe 2"– 4" in diameter shall be PE3408 Polyethylene with a minimum SDR 21 wall thickness. Casing pipe 8"– 24" in diameter shall be either PE3408 Polyethylene with a minimum SDR 21, or spiral welded steel pipe meeting AWWA C206 with a minimum wall thickness 3/8", or PVC pipe with a minimum SDR 35 wall thickness.

Casing pipe for other applications shall comply with all local governmental standards and regulations. A minimum wall thickness of 3/8" is required.

HDPE casing pipe shall be SDR-13.5, PE3408 per AWWA C906, where approved by the Utility.

D. Limits of Casing (from the Utility's main to the end of casing):

- 4' separation from edge of main to end of casing (3/4"– 1 ¼")
- 6' separation from edge of main to end of casing (1 ½"– 2")
- 8' separation from edge of main to end of casing (4" and larger)

8.22 Vaults

A. General

Vault Size	Standard Practice Drawing
6' x 6' x 6'	V
8'-6'' x 5'-6'' x 7'	W
8' x 4' 7'	X
10' x 6' x 7'	Y
Westfield – Varies	See drawing

Citizens Water Meter Vault on all metered services lines 2" in diameter or larger. Vaults may be used for non-metered fire services 2" in diameter or larger for housing double-check assemblies only.

B. Material

Vaults shall be pre-fabricated or cast-in-place concrete. Concrete shall be a minimum of 4,000 psi. Concrete wall thicknesses shall be specified by the Professional Engineer and submitted to the utility for review. Soils and site specific conditions shall be taken into account when designing the wall thicknesses for the vaults.

C. Vault Lids

For 1 ½" and 2" meters, manway openings for vaults shall be a Ford #10 ring and lid or equal. Manway openings for meters larger than 2 shall be a Bilco Access Door and Frame type J-2 or equal.

D. Steps

All vaults shall be equipped with non-slip type steps and shall be Neenah R- 1980C pre-cast steps or equal. Steps shall be set in concrete or masonry spaced horizontally 1' on center.

E. Hoist Ring

All vaults housing meters 4" in diameter or larger shall be equipped with a hoistring.

8.23 Meter Pits

A. General

All meter pits shall adhere to CW Standard Practice Drawing "T1"-Standard Service Line Installation and Setting For 5/8", 3/4", and 1" Meter in Single Pit, CW Standard Practice Drawing "T2"-Standard Service Line Installation and Setting For Two (2) 5/8" Meters in Single Pit, CW Standard Practice Drawing "V"-6' x 6' x 6' Citizens Water Meter Vault, CW Standard Practice Drawing "W"-8' 6" x 5' 6" x 7' Citizens Water Meter Vault, CW Standard Practice Drawing "X"-8' x 4' x 7' Citizens Water Meter Vault, CW Standard Practice Drawing "Y"-10' x 6' x 7' Citizens Water Meter Vault, Standard Practice Drawing Z.1 – Polyethylene Service Line Meter Support (Single Meter Set), and Standard Practice Drawing Z.2 – Polyethylene Service Line Meter Support (Double Meter Set).

Westfield – Refer to Standard Drawings for Westfield Meter Pits.

B. Meter Pit Lid and Ring

For 5/8" and 3/4" meters, the pit lid and ring shall be a Ford Meter Box Co. Type X #3 or equal single lid. For 1" meters, the pit lid and ring shall be a Ford Meter Box Co. Type X #43 or equal single lid with adapter lid for a 24" riser.

C. Meter Pit Riser

For 5/8" and 3/4" meters, the meter pit shall consist of a 20" in diameter riser or equal. For 1" meters, the meter pit shall consist of a 24" in diameter riser or equal. All risers shall be 48" in depth.

8.24 Insulated Enclosures

Insulated enclosures shall be installed on a minimum 4" thick concrete pad and shall be wired to comply with the National Electrical Code and all Local and State requirements.

8.25 Backflow Protection Devices

A. Backflow protection shall be provided as required by the Indiana Administrative Code, Title 327.

B. Acceptable Devices

Only the devices identified as approved by the Indiana Administrative Code, Title 327 are acceptable for use at the point of connection to the Utility's water distribution system.

SECTION 9.0

INSTALLATION REQUIREMENTS FOR WATER MAINS AND SERVICE LINES

9.01 General

All water main and service line installation and restoration shall conform to the Standards and be performed in accordance with all State, Federal, Local codes and regulations. All methods shall adhere to the best practices of the water utility industry and the American Water Works Association.

All water main pipe materials and appurtenances shall comply with Section 7.0, "Material Requirements for Water Main Installation", of these "Standards".

All service line pipe materials and appurtenances shall comply with Section 8.0 "Material Requirements for Service Lines", of these "Standards".

The Contractor/Developer shall be responsible for obtaining all permits prior to the performance of the required work.

Additional requirements are as follows:

A. Prior to installing a water main(s), a pre-construction meeting shall be held between the Contractor/Developer and the Utility's representative for each project. The Contractor/Developer shall be responsible for contacting the Utility's representative to schedule this meeting.

All materials necessary to complete the water main(s) installation shall be on-site at the time of the pre-construction meeting for inspection and approval by the Utility prior to installation.

All required permits shall be available for review at the time of the pre-construction meeting.

B. Construction shall commence within sixty (60) days after release for construction by the Utility. If construction of the water main installation is halted for more than 60 days, plans shall be resubmitted for review and approval by the Utility.

If a construction delay of ten (10) days or more should occur on a project, a written notification shall be submitted to the Utility, a minimum of three (3) working days before construction can resume.

C. If an existing customer may experience a disruption of service, the Contractor/Developer shall notify the Utility a minimum of three (3) working days prior to the outage. The Contractor/Developer may not disrupt existing service without the approval of the Utility.

If the Developer/Contractor cancels the work, the Contractor/Developer's shall be responsible for all associated costs involved in the re-notification of customers. Any existing appurtenances (e.g., valves, blow-off assemblies, etc.) shall be operated by the Utility only.

D. The main extension and/or service line construction site shall be accurately surveyed and staked in accordance with the approved plans.

E. The Utility will examine all pipeline materials prior to and during the construction phase, as well as confirm that work performed complies with the Standards and the main extension contract. The Contractor/Developer shall furnish all reasonable assistance as required during the inspection and shall abide by directives and instructions from the Utility.

Service lines 1¼" in diameter and smaller are inspected at the time of the service connection ("tap").

F. Any damage made to the Utility's system by the Contractor/Developer or their affiliates shall be immediately repaired to the satisfaction and direction of the Utility. All such repairs shall be at the Contractor/Developer's expense.

G. Should the Contractor/Developer propose to deviate from the approved plans, a revised set of plans shall be submitted to the Utility for approval. A stop work order will be immediately issued to the Contractor until such alternative is approved.

H. No work shall be performed under conditions that could, in the opinion of the Utility, adversely affect the quality of the finished project.

I. The Contractor/Developer shall conduct the work, so as not to interfere with the present operation of the existing Utility's plant or facilities. If any work interference is encountered between the Utility and the Contractor/Developer, the Utility shall receive priority in scheduling.

J. Water mains and service lines shall be disinfected and hydrostatically tested in accordance with Appendix E-Construction Testing Methods.

K. The Contractor/Developer shall be responsible to adjust all meter pits, valve boxes, curb boxes and fire hydrants to finished grade, as specified in CW Standard Practice Drawings "B"-Standard Hydrant Setting for 12" and Larger Water Main, "C" Standard Hydrant Setting for 6" and 8" Water Main, CW Standard Practice Drawing "S"-Standard Installation for Multiple Meter Settings, CW Standard Practice Drawing "T"-Standard Service Line Installation and Setting for 5/8", 3/4" and 1" Meter in Single Pit, CW Standard Practice Drawing "T.1"- Standard Service Line Installation and Setting for Two (2) 5/8" Meters in Single Pit, CW Standard Practice Drawing "Z.1"-Polyethylene Service Line Meter Support (Single Meter Set) and CW Standard Practice Drawing "Z.2"- Polyethylene Service Line Meter Support (Double Meter Set

WESTFIELD – Refer to the Westfield Standard Drawings in the Appendix. These details shall be utilized in Westfield service territory otherwise Standard Practice Drawings are to be utilized.

L. The Utility shall receive a submittal of all final documents prior to authorizing service from the existing water mains to the newly installed water mains.

M. The Contractor/Developer shall conduct an inspection annually from the in service date and shall be documented as specified in Appendix K-Water Main and Service Line Close-Out Checklist.

N. The Utility will perform an inspection prior to the expiration of the Maintenance Bond and notify the Contractor/Developer of any necessary corrections. If corrections are not made prior to the release of the Maintenance Bond, the Utility will make necessary repairs and shall be reimbursed for all costs by the Contractor/Developer.

O. If additional testing (e.g., sterilization, flushing, sampling, leak survey, continuity testing, hydrostatic testing, etc.) is required, the Developer shall be required to pay all related costs on a time and material basis. The project will not be released for service connection until all described testing has been properly demonstrated, documented and approved by the Utility.

P. The Developer shall be responsible for all costs resulting from any corresponding damages related to the Section 9.0-Installation Requirements for Water Main.

Q. All "trenchless" installations (e.g. directional bores, casing bores, etc.) shall be completed prior to receiving the service connection ("tap").

9.02 Material Handling and Storage

All materials furnished by the Contractor/Developer, including pipe, fittings, valves, hydrants and other accessories, shall at all times be handled with care to avoid damage. During loading and unloading, a hoist shall be used to lift all materials in such a manner as to avoid shock. Under no circumstances shall materials be dropped, rolled or dumped.

During loading, unloading, moving, and/or setting of pipes, valves, fittings, hydrants, and appurtenances, hooks shall not be permitted to come into contact with joint surfaces. Chains or cables shall be used for these purposes for ductile iron material. A nylon or another fabric-type sling shall be used for PVC or HDPE material.

The Contractor/Developer shall ensure that all materials are protected from adverse and/or hazardous conditions while on the project site until installation is completed.

9.03 Public Utilities

The Contractor/Developer installing a water main(s) shall provide "Record Drawing" plans that illustrate all information available on existing and proposed improvements including, but not limited to: sewers, culverts, gas lines, ducts, conduits, cables, pipes, etc.

The Contractor/Developer shall notify all utilities in accordance with applicable State standards, ordinances or other Local provisions.

Temporary support, adequate protection and maintenance of all underground and surface utility structures, drains, sewers and other obstructions encountered during project progression shall be furnished by the Contractor/Developer at their own expense.

The Contractor/Developer shall immediately contact the appropriate utility should any damage be made to their facilities. Such damage shall be repaired in accordance with the directive and to the satisfaction of the affected utility. All repairs shall be at the Contractor/Developer's expense.

9.04 Alignment and Grade

All storm and sanitary sewers shall be installed prior to the installation of the water mains.

Water mains and service lines shall be installed such that the minimum horizontal and vertical separation distance from all sewers is in accordance with Indiana Administrative Code, Title 327 and as specified in CW Standard Practice Drawing "A"-Water and Main Separation Detail.

A rough grade shall be established within 6 of proposed final grade prior to water main installation.

Piping alignment and depth shall be installed, consistent with the approved plans and in accordance with the Standards and the Indiana Administrative Code, Title 327. No deviation shall be made from the horizontal and/or vertical alignment or grade prior to the approval of the Utility.

Changes in piping direction may only be accomplished by the use of manufactured bend fittings and the allowable deflection of pipe materials as recommended by the pipe manufacturer. Whenever it's necessary to deflect ductile iron pipe from a straight line to avoid obstructions, either in the vertical or horizontal plane, to plumb valve operating stems or for other reasons, the degree of deflection shall be approved by the Utility as recommended by the pipe manufacturers identified in Appendix L – 'Approved Manufacturers for Water Main Materials'

Mandatory pipe cover shall be 54" below finished grade or as required by the Indiana Administrative Code, Title 327. Depth of bury greater than 54" shall be approved by the Utility prior to installation. The Contractor/Developer shall use survey instruments when necessary to avoid potential conflicts and/or maintain alignment and grade.

9.05 Trench Excavation, Preparation and Backfill Surrounding the Pipe

A. Description

The trench shall be dug to the alignment and depth required by these Standards and the approved plans,but only so far in advance of pipe laying and/or tapping as the work permits. Tap excavation need to be shored in accordance with the current OSHA Standards. Consideration shall be given to any proposed and foreseeable future grade changes. The trench shall be so braced and drained such that workers may perform their duties therein to avoid potential contamination of the water main during installation. Water from trench dewatering shall not be allowed to enter the pipe.

B. Width

The trench width may vary depending upon the depth of trench and the nature of the excavated material encountered. However, the trench shall be the necessary width to facilitate proper installation. Per the AWWA Principles and Practices of Water Supply Operation, "Trench width below the top of the pipe should generally be no more than 1 to 2 ft greater than the outside diameter of the pipe." Excessive trench widths for smaller diameter pipe should be avoided if at all possible. Maintaining a narrow trench width in all areas, if possible, shall be considered. Refer to table 1 and 2 provided below for recommended trench widths per AWWA Principles and Practices of Water Supply Operation.

Table 1: Trench Widths for Ductile Iron Pipe

Nominal Pipe Size In.	Recommended Trench Widths In.
4	28
6	30
8	32
10	34
12	36
16	40
20	44
24	48
30	54
36	60
48	72
54	78

Table 2: Trench Widths for PVC Pipe

Nominal Pipe Size	Recommended Trench Widths	
	In. Minimum	In. Maximum
4	18	29
6	18	31
8	21	33
10 and Greater	24	36

NOTE:
WATER SPECIFICATIONS, AS LISTED, ARE PER:
CITIZENS ENERGY GROUP
1220 WATERWAY BOULEVARD
P.O. BOX 1220
INDIANAPOLIS, IN 46206

10505 N. College Avenue
Indianapolis, Indiana 46280
weihe.net
317 | 846 - 6611
800 | 452 - 6408
317 | 843 - 0546 fax
ALLAN H. WEIHE, P.E., L.S. - FOUNDER
WEIHE ENGINEERS
Land Surveying | Civil Engineering
Landscape Architecture

REVISIONS AND ISSUES	DATE	BY
SUBMITTED FOR COUNTY SURVEYOR REVIEW	10.16.2015	BJS
ISSUED FOR TAC REVIEW	01.29.2016	BJS

PROJECT NO.: W15.0316
DWG NAME:
DESIGNED BY: RLW
DRAWN BY: RLW
CHECKED BY: BJS
DATE: 01.29.2016

STEVEN SCOTT RUCKER REGISTERED PE11300279 STATE OF INDIANA PROFESSIONAL ENGINEER
NOT FOR CONSTRUCTION APPROVAL PENDING

STEVEN SCOTT RUCKER P.E. 11300279

PREPARED FOR:
Culver's of WESTFIELD
17651 SUN PARK DRIVE, WESTFIELD, IN 46074

CITIZENS - WATER SPECIFICATIONS
Part of SW/4, Section 36, Township 19 North, Range 3 East, Washington Township, Hamilton County, Indiana

SHEET NO.
C903

PROJECT NO.
W15.0316

LOCATION: H:\2015\w150316\Engineering\design\conset\w150316-C902 water specs.dwg
LAYOUT: C903
DATE/TIME: January 28, 2016 – 2:46pm
PLOTTED BY: schoeffb

SECTION 301
General

301.01 Introduction

This Chapter contains the minimum material requirements for construction of sanitary sewer facilities within the Indianapolis Sanitary District and Westfield.

301.02 General for all Materials

The materials used in the construction shall be in full conformance with those guidelines set forth below and according to the applicable ASTM, AWWA, and ANSI specifications.

These material requirements are minimum requirements and are in part restatements of requirements set forth within the referenced standards, with noted exceptions. The Engineer shall be ultimately responsible for designing and selecting the appropriate material for each specific application. Information from the referenced specifications has been included within this Chapter for the convenience of the reader. However, the engineer, contractor, and manufacturer must also assume the responsibility of familiarizing themselves with these requirements. The City will not assume responsibility for noncompliance with the referenced specifications as a result of information not provided in this Manual.

301.03 Material Markings

Each length of pipe and each manhole or other structure shall be marked per the requirements of each respective ASTM, AWWA and/or ANSI Standard referenced within this Chapter.

301.04 Certification of Materials

The Division or Department reserves the right to require material certification from the manufacturer prior to construction to ensure the material supplied conforms to the prescribed requirements.

Upon request, the Contractor shall furnish a certificate of conformance to the required ASTM, AWWA, and/or ANSI Standards, this Manual, and other conformance certifications in the form of affidavits of conformance, test results, and/or copies of test reports.

Provisions for obtaining this certification shall be the responsibility of the Applicant.

The City of Indianapolis does not assume the responsibility for the expense of obtaining material certification.

301.05 Handling, Storage, and Color

The handling, storage and color requirements for pipe material are as follows:

1. Handling and Storage

   The manufacturer shall package the pipe in a manner designed to deliver the pipe to the project site nearly, intact, and without physical damage. The transportation carrier shall use an appropriate method to ensure the pipe is properly supported, stacked, and restrained during transport. On-site, the pipe shall be stored on clean, level ground to prevent undue scratching or gouging.

2. Color

   The interior of the pipe shall be light colored to facilitate CCTV inspection. The pipe exterior may be colored per the manufacturer's standard color scheme with the exception of blue. Blue pipe shall not be used to avoid confusion with water pipes.

SECTION 302
Sanitary Sewer Pipe Material

302.01 Introduction

This Section applies to materials to be used for the construction of gravity sewers.

For materials to be used for laterals refer to Section 303.

For materials to be used for force mains refer to Section 304.

For materials to be used for manholes refer to Section 305.

302.02 Allowable Pipe Materials

The following pipe materials are the only materials that may be used for gravity sanitary sewer installations:

Material	Designation	Max. Depth, ft	Sizes (Nominal Diameter, in.) Minimum	Maximum
Polyvinyl Chloride Pipe (PVC)	ASTM D 3034 ASTM F 679 ASTM D 2241 AWWA C900 AWWA C905	25 25 40 40 40	8 18 8 8 14	15 48 96 12 36
Reinforced Concrete Pipe (RCP)	ASTM C 76 ASTM C 655	25'	24	144
Ductile Iron Pipe (DIP)	ASTM A 746 AWWA C151	40	8	60
Closed Profile Large Diameter PVC Pipe	ASTM F 1803	25	18	54
Centrifugally Cast Fiberglass Reinforced Polymer Mortar Pipe	ASTM D 3262	40	18	60
Prestressed Concrete Cylinder Pipe (PCCP)	AWWA C301	40	30	144

' – The maximum depth is a guideline. Due to the variability of site conditions, the Engineer is ultimately responsible for certifying the pipe selected is acceptable for the depths listed and the specific project application.

– The depth can be increase to forty (40) feet provided the joints and gaskets are designed per ASTM C 361. See Section 302.66.3 for specific requirements.

The individual requirements and specifications for the above pipe materials are listed in the remainder of this Section.

Vitrified Clay Pipe (VCP) for gravity sewer construction is not allowed.

302.03 Polyvinyl Chloride Pipe (PVC)

The minimum requirements for PVC are as follows:

1. Size

   Maximum size – Forty-eight (48) inches

2. Material

   a. Pipe installations up to twenty-five (25) feet deep

      Polyvinyl Chloride (PVC) sanitary sewer pipe and fittings eight (8) inches through fifteen (15) inches in diameter shall be the integral wall bell and spigot type with elastomeric seal joints and smooth walls conforming to ASTM D 3034 and a minimum of SDR 35.

      PVC sanitary sewer pipe and fittings eighteen (18) inches in diameter and larger shall be smooth wall conforming to ASTM F 679.

      All fittings shall be heavy walled fittings.

      Pipe shall have a minimum pipe stiffness of 46 psi when measured at 5% vertical ring deflection and tested in accordance with ASTM D 2412 and a minimum tensile strength of 34.50 MPa.

   b. Pipe installations over twenty-five (25) feet deep

      PVC pipe materials shall be ASTM D 2241 (SDR 26 minimum) with minimum cell classification of 12454, AWWA C900 (DR 25 min), or AWWA C905 (DR 25 min).

      When pipe conforming to AWWA Standards is used, all fittings shall also be made of PVC.

3. Joints and Gaskets

   a. Joints

      i. Flexible gasketed joints shall be compression type so that when assembled, the gasket inside the bell will be compressed radially on the pipe spigot to form a watertight seal.

      ii. Joints shall be as follows:

      - For pipe conforming to ASTM D 3034 and F 679, the joint shall meet the requirements of ASTM D 3212.
      - For pipe conforming to ASTM D 2241, AWWA C900, and AWWA C905, the joint shall meet the requirements of ASTM D 3139.

      iii. The assembly of joints shall be in accordance with the pipe manufacturer's recommendations.

   b. Gaskets

      All gaskets shall meet the requirements of ASTM F 477.

Solvent welded joints and coupling joints are not acceptable.

4. Field Cutting of Pipe

   All field-cutting of pipe shall be done in a neat, trim manner using a hand or power saw, and the cut end shall be beveled using a file or wheel to produce a smooth bevel of approximately 15° and be a minimum depth of one-third (1/3) the pipe wall thickness or beveled as specifically recommended by the pipe manufacturer. Field cut pipe will only be allowed to be installed at manholes, at prefabricated tees and wyes, and at the connection of new sanitary sewer to existing sanitary sewer.

5. Rejection of Damaged Pipe

   PVC pipe possessing the following defects may be rejected for installation: variation from straight centerline; elliptical shape; illegible markings as required; deep or excessive gouges or scratches of the pipe wall; fractures, punctures, or cracks passing through the pipe wall; and damaged ends where such damage would prevent making a satisfactory joint.

6. Pipe Markings

   For PVC pipe, each length of pipe must be marked per ASTM and AWWA requirements, and at a minimum with the following: name of manufacturer, tradename or trademark, nominal pipe size, production/extrusion code, material and cell class designation, ASTM designation, and SDR number.

   In addition, the plain end of each pipe length shall have rings painted around the pipe at the proper location to allow field checking of the correct setting depth of the pipe in the bell.

7. Manufacturer and Construction

   a. Pipes

      Pipes shall be manufactured and tested in accordance with appropriate ASTM and AWWA standards to result in a solid wall pipe.

   b. Fittings

      Tees, wyes, and other fittings shall be heavy-walled and capable of withstanding the same stresses as the pipe to which they are connected. All fittings shall be fabricated from pipe meeting the requirements of these standards.

302.04 Closed Profile Large Diameter PVC

The minimum requirements for Closed Profile PVC pipe are as follows:

1. Size

   Maximum Size – Fifty-four (54) inches

2. Materials

   Pipe and fittings shall be made from polyvinyl chloride compounds which comply with the requirements as specified by ASTM F 1803 with a minimum cell classification of 12364. Minimum pipe stiffness shall be 46 psi when tested in accordance with ASTM D 2412.

   The actual inside and outside diameter of the pipes shall be in accordance with current manufacturer's literature, unless otherwise agreed to by the Department. Pipe shall be supplied in nominal lengths of fourteen (14) feet unless special sections are needed for construction in which case shorter or longer lengths may be used. Actual laying length shall be nominal plus or minus two (±2) inches.

3. Joints and Gaskets

   All pipe joints shall be of the bell and spigot type with elastomeric seals and conform to the requirements of ASTM D 3212.

   Gaskets shall be factory-installed and chemically bonded to the bell end of the pipe. Gasket material shall conform to the requirements of ASTM F 477.

4. Rejection of Damaged Pipe

   Pipe possessing the following defects may be rejected for installation: variation from straight centerline; elliptical shape; illegible markings as required herein; deep or excessive gouges or scratches of the pipe wall; fractures, punctures, or cracks passing through the pipe wall or wall profile; damaged ends where such damage would prevent making a satisfactory joint; voids in the pipe walls, or other noticeable defects in pipe manufacture.

5. Marking

   Each PVC closed profile wall pipe length and fitting shall be clearly marked per ASTM F 1803 and at a minimum with the following: manufacturer's name, nominal pipe size, cell classification, pipe stiffness - 46 PSI, and certification.

6. Manufacture and Construction

   a. Pipes

      Manufacture pipe by the I-beam profile construction process to result in a non-porous, corrosion-resistant, consistent structure.

   b. Fittings

      Flanges, elbows, reducers, tees, wyes, laterals and other fittings shall be capable of withstanding the same stresses as the pipe to which they are connected. All fittings shall be fabricated from pipe meeting the requirements of these standards. Fabricated miter joints shall be reinforced by fusion heat welding.

Closed Profile Large Diameter PVC Gravity Sewer shall be Lamson Vylon Pipe or an approved equal.

302.05 Centrifugally Cast Fiberglass Reinforced Polymer Mortar Pipe

The specifications herein shall be considered as the minimum requirements for Centrifugally Cast Fiberglass Reinforced Polymer Mortar Pipe. Due to the differing manufacturing processes and strength characteristics between the different manufacturers, the pipe shall be designed for site specific conditions.

The minimum requirements for Centrifugally Cast Fiberglass Reinforced Polymer Mortar Pipe are as follows:

1. Size

   Maximum size – Sixty (60) inches

2. Materials

   Pipe shall be manufactured per ASTM D 3262.

   The actual inside and outside diameter of the pipes shall be in accordance with current manufacturer's literature, unless otherwise agreed to by the Department.

Pipe shall be supplied in nominal lengths of twenty (20) feet unless special sections are needed for construction in which case shorter or longer lengths may be used. Actual laying length shall be nominal ± two (2) inches.

Minimum pipe stiffness shall be 46 psi when tested in accordance with ASTM D 2412.

Applications which are to be directly jacked into place or micro-tunneled shall utilize pipe configurations specifically designed for jacking or tunneling applications with no protrusions for the joint coupling.

a. Resin Systems

   The manufacturer shall use vinylester resin systems for greater chemical resistance. Polyester resin systems with a proven history of performance in resisting sanitary sewerage may only be used with prior written approval from the Department and then only after the Engineer determines the greater chemical resistance is not needed.

b. Glass Reinforcements

   The reinforcing glass fibers used to manufacture the components shall be of commercial grade E-glass filaments with binder and sizing compatible with impregnating resins.

c. Silica Sand

   Sand shall be minimum 98% silica with a maximum moisture content of 0.2%.

d. Additives

   Resin additives, such as curing agents, pigments, dyes, fillers, thixotropic agents, etc., when used, shall not detrimentally affect the performance of the product.

3. Joints and Gaskets

   Fiberglass sleeve couplings that utilize elastomeric sealing gaskets of an appropriate profile shall be the sole means to maintain joint water tightness. The joints must meet the performance requirements of ASTM D 4161. All joints shall be certified by the pipe manufacturer to perform at fifty (50) feet of hydrostatic head at 5% deflection.

   The gaskets shall be made of EDPM elastomeric membrane and shall be resistant to sewage, industrial wastes, and groundwater.

4. Rejection of Damaged Pipe

   Pipe possessing the following defects may be rejected for installation: variation from straight centerline; elliptical shape; illegible markings as required herein; deep or excessive gouges or scratches of the pipe wall or liner; fractures, punctures, or cracks passing through the pipe wall; damaged ends where such damage would prevent making a satisfactory joint; voids in the pipe walls, delamination, cracking and crazing of liner or pipe wall, or other noticeable defects in pipe manufacture.

5. Marking

   Each length of pipe shall be clearly marked per ASTM D 3262 and at a minimum with the following: manufacturer's name, tradename or trademark, nominal pipe size, pipe stiffness, production code, and ASTM number.

6. Manufacture and Construction

   a. Pipes

      Manufacture pipe by the centrifugal casting process to result in a dense, non-porous, corrosion-resistant, consistent composite structure. Pipes shall be tested in accordance with ASTM D 3262. MANDREL PROCESSES TO BUILD UP THE PIPE WALL ARE NOT ALLOWED.

   b. Fittings

      Flanges, elbows, reducers, tees, wyes, laterals, and other fittings shall be capable of withstanding the same stresses as the pipe to which they are connected. They may be contact molded or manufactured from mitered sections of pipe joined by glass-fiber-reinforced overlays. Properly protected standard ductile iron, fusion-bonded epoxy coated steel and stainless steel fittings may also be used.

Centrifugally Cast Fiberglass Reinforced Polymer Mortar Pipe shall be Hobas pipe or an approved equal.

302.06 Reinforced Concrete Pipe (RCP)

The minimum requirements for Reinforced Concrete Pipe are as follows:

1. Size

   Minimum – Twenty-four (24) inches

   Maximum – One hundred forty-four (144) inches

2. Material

   a. Reinforced Concrete:

      Reinforced concrete pipe shall be in accordance with ASTM C 76. Pipe wall thickness shall be either Wall B or Wall C as appropriate for the size and installation. When deep burial depths are greater than twenty-five (25) feet require an improved joint to resist higher test conditions, joint sections manufactured in accordance with ASTM C 361 with a joint rating of at least fifty (50) feet shall be incorporated.

      When special conditions exist and are authorized by the Department reinforced concrete pipe manufactured in accordance with ASTM C 655 may be used. The minimum D-load design for ASTM C 655 pipe shall be 1000 and the minimum increment of D-load shall be at least 200, if multiple pipe designs are proposed on a single project.

      For pipe designed in accordance with ASTM C 76 or C 655, factors of safety shall be 1.5 for D-loads of 2000 and less, 1.25 for D-loads of 3000 and higher and uniformly decreasing between 1.5 and 1.25 for D-loads between 2000 and 3000. The wall thickness shall not be less than the wall thickness used to verify the D-load strength.

   b. Steel Reinforcement

      Steel reinforcement shall be in accordance with and placed to the requirements of the applicable tables in ASTM C 76, ASTM C 361, or per the approved D-load design. Longitudinal reinforcement shall be continuous and all reinforcement shall have a minimum concrete cover of 1 inch. Minimum cover requirements do not apply to the mating surfaces of the joint, gasket seat, or end of longitudinals. Elliptical reinforcement shall not be permitted.

   c. Lift Holes

      Lift holes are not allowed.

   d. Lining

      All reinforced concrete pipe for sanitary sewers shall be factory lined with one of the following materials: T-Lock PVC by Ameron, GSE Studliner by Grundle/SLT Environmental, Agru Sure Grip by Agru America, or approved equal.

      i. Liners shall be completed with heat welded joints at all pipe joints where the liner is discontinuous across the joint. Liner sheets with adhesive backing or other non-heat welded joint overlays are not permitted.

      ii. Liner shall be embedded in concrete to withstand a test pull of at least 100 pounds per linear inch, applied perpendicularly to the concrete surface for a period of one minute, without rupture of the locking extensions or withdrawal from embedment. This test shall be made at a temperature of 70-80 degrees Fahrenheit inclusive.

      iii. Lining material shall have good impact resistance, shall be flexible, and shall have an elongation sufficient to bridge up to one-quarter (¼) inch setting cracks, which may occur in the joint after installation, without damage to the lining.

      iv. The lining shall be repairable at any time during the life of the pipe or structure by heat welding additional materials to the liner.

      v. The lining materials shall be resistant to municipal sewage.

3. Joints and Gaskets

   All joints for pipes in accordance with ASTM C 76 and ASTM C 655 shall comply with the requirements of ASTM C 443.

   Joints and gaskets designated to be in excess of twenty-five (25) feet of head shall be designed in accordance with ASTM C 361.

   Only one style of joint system or configuration shall be permitted between adjacent manholes.

4. Rejection of Damaged Pipe

   Pipe possessing the following defects may be rejected for installation: variation from straight centerline; elliptical shape; illegible markings; fractures in excess of 0.01 inch or cracks passing through the pipe wall; damaged ends where such damage would prevent making a satisfactory joint; voids and/or honeycombing in the pipe walls, delamination of pipe liner, cracking and crazing of liner, or other noticeable defects in pipe or liner manufacture.

5. Marking

   All markings required by the appropriate ASTM specification shall be legibly marked on each section of pipe.

6. Manufacturer and Construction

   Manufacture and test pipe sections in accordance with ASTM C 76, C 361, or C 655 as appropriate for the strength, class, size, and joint design utilized.

7. Special Shaped Pipe

   Special shaped pipe shall conform to the specifications for straight pipe insofar as applicable. Special designs or construction necessary for specials shall be subject to approval by the Department on a case-by-case basis.

302.07 Ductile Iron Pipe (DIP)

The minimum requirements for Ductile Iron Pipe (DIP) are as follows.

1. Size

   Maximum – Sixty (60) inches

2. Materials

   Ductile Iron Pipe shall be centrifugally cast and shall conform to ANSI/AWWA A21.51/C151 and ASTM A 746. Thickness or pressure class requirements of ductile iron pipe may be used for design in the conveyance of sanitary sewage by gravity. The minimum pipe wall thickness allowed shall be Class 250. Weights of pipe fittings shall conform strictly to the requirements of Specifications. The minimum laying lengths shall be eighteen (18) feet.

3. Coatings and Linings

   a. Coatings

      The outside surfaces of the pipe and fittings shall be bituminous-coated complying with ANSI/AWWA A21.51/C151 and ANSI/AWWA A21.10/C110.

   b. Linings

      The inside surfaces of all pipe, fittings, and adapters shall be lined with factory applied Protecto 401™ ceramic epoxy lining, or approved equal.

4. Joints

   Mechanical, push on or restrained joints shall be provided. Flanged joints are not allowed for buried applications.

   a. Mechanical joints and accessories shall conform to AWWA C111/ ANSI A21.11. The bolts and nuts shall be corrosion resistant high strength alloy steel.

   b. Ductile iron pipe push-on type joints shall conform to ANSI A21.11/AWWA C111. Fittings shall be ductile iron and shall comply with ANSI Specification A21.10/AWWA C110.

   c. Restrained joints shall be manufactured in accordance with pipe manufacturers' requirements. Locking rings, tabs, inserts, or gaskets with mart steel grips may all be used for gravity sanitary sewer applications.

5. Fittings

   Fittings shall be standardized for the type of pipe and joint specified, and shall comply with ANSI A21.10/AWWA C110.

6. Rejection of Damaged Pipe

   Pipe possessing the following defects may be rejected for installation: variation from straight centerline; elliptical shape; illegible markings as required herein; deep or excessive gouges or scratches of the pipe wall or lining; fractures or cracks in the pipe wall or lining; damaged ends where such damage would prevent making a satisfactory joint; delamination of linings, cracking and crazing of liner, or other noticeable defects in pipe manufacture.

7. Markings

   Each pipe length shall be marked per ASTM A 746 and at a minimum the following: nominal size and class designations for the various classes of pipe and fittings shall be cast onto fittings in raised numerals, and cast or stamped on the outside of each section of pipe. Weights shall be plainly and conspicuously painted in white on the outside of each section of pipe and each fitting after the exterior coating has hardened.

8. Manufacturer and Construction

   Manufacture and test completed pipe sections in accordance with ANSI/AWWA A21.4/C104, ANSI/AWWA A21.51/C151, ANSI/AWWA A21.10/C110 and AWWA C111 (ANSI A-21.11) as appropriate.

302.08 Prestressed Concrete Cylinder Pipe (PCCP)

The minimum requirements for pre-stressed concrete cylinder pipe for gravity applications are as follows.

1. Size

   Minimum Size – thirty (30) inches

   Maximum Size – One hundred forty-four (144) inches

2. Material

   The pipe shall conform to the requirements of AWWA C301. C301 pipe shall be designed in accordance with AWWA Standard C304. The pipe design shall be based on the working pressures, surge pressures, earth cover, and live load criteria provided in the contract documents. The external load design shall be suitable for the installation conditions shown in the project plans.

3. Lining

   All PCCP pipe shall be factory lined with one of the following materials: T-Lock PVC by Ameron, GSE Studliner by Grundle/SLT Environmental, Agru Sure Grip by Agru America, or approved equal.

   a. Liners shall be completed with heat welded joints at all pipe joints where the liner is discontinuous across the joint. Liner sheets with adhesive backing or other non-heat welded joint overlays are not permitted.

   b. Liner shall be embedded in concrete to withstand a test pull of at least 100 pounds per linear inch, applied perpendicularly to the concrete surface for a period of one minute, without rupture of the locking extensions or withdrawal from embedment. This test shall be made at a temperature of 70-80° Fahrenheit inclusive.

   c. Lining material shall have good impact resistance, shall be flexible, and shall have an elongation sufficient to bridge up to one-quarter (¼) inch setting cracks, which may occur in the joint after installation, without damage to the lining.

   d. The lining shall be repairable at any time during the life of the pipe or structure by heat welding additional materials to the liner.

   e. The lining materials shall be resistant to municipal sewage.

4. Joints

   Steel and rubber gaskets shall conform to AWWA C301.

5. Fittings and Special Sections

   Fittings and special pipe sections shall be designed and fabricated to the requirements of the appropriate AWWA standards and AWWA Manual M9 Chapter 8, as applicable.

   All required flanges shall conform to AWWA C207 Class D requirements for standard steel flanges corresponding to the pipe working pressures.

   The PVC lining in fittings and special sections shall be attached to the mortar lining using methods acceptable to the manufacturer of the lining material.

6. Rejection of Damaged Pipe

   Pipe possessing the following defects may be rejected for installation: variation from straight centerline; elliptical shape; illegible markings; fractures in excess of 0.01 inch, cracks passing through the pipe wall, damaged ends where such damage would prevent making a satisfactory joint, voids and/or honeycombing in the pipe walls, or other noticeable defects in pipe manufacture.

7. Marking of Pipe

   The inside of each pipe section, fitting, or special pipe section shall be plainly marked with the pipe diameter and pressure class for which the section or fitting is designed. In addition, all fittings and special pipe sections shall be marked with an identifying number or station corresponding to that shown on the layout schedule. All fittings or special sections requiring special field orientation during installation shall be properly marked.

SECTION 303
Laterals

303.01 Introduction

This Section applies to the materials to be used for the construction of laterals.

For materials to be used for gravity sewers refer to Section 302.

For materials to be used for force mains refer to Section 304.

For materials to be used for manholes refer to Section 305.

303.02 Lateral Materials

The minimum requirements for laterals shall conform to the following:

1. Allowable Pipe Materials

   The following are the only materials that shall be used for laterals.

Material	Designation	Classification	
PVC	ASTM D 3034	SDR 35	Cell Class 12454 or 12364
PVC	ASTM D 2241	SDR 32.5	Cell Class 12454
PVC	ASTM D 2466	Schedule 40	Cell Class 12454
PVC	ASTM D 2467	Schedule 80	Cell Class 12454
HDPE*	ASTM F 714	DR 17	Hydrostatic Design Basis of 1600 psi

*HDPE is only allowed for pipe bursting applications, shall utilize DIPS pipe sizing, and shall have a light reflective interior. Standard black interior lined pipe shall not be accepted.

Vitrified Clay Pipe (VCP) for lateral construction is not allowed.

2. Joints

   a. For four (4) inch and six (6) inch laterals, only six (6) inch laterals will be allowed in Westfield.

      Joints shall be solvent cement type for PVC or butt fused type for HDPE.

   b. For eight (8) inch and larger laterals

      Joints shall be either flexible gasket push-on type or solvent cement type for PVC or butt fused type for HDPE.

   Joints shall be installed in accordance with the manufacturer's recommendations.

3. Backwater Prevention Valves (Westfield Only)

   a. A backwater prevention valve shall be provided for each sanitary sewer lateral. The backwater prevention valve shall be located outside the structure and right-of-way. The backwater valve shall be a clean-out/check valve.

303.03 Controlled Settlement (Slip) Joints

The controlled settlement joint shall be a double gasketed joint made specifically for the purpose of allowing axial movement of the riser pipe for forces from 500 lb/ft to 1,970 lbf/ft.

The allowable movement within the joint shall be five and one-half (5½) inches.

The controlled settlement joint shall be as manufactured by Plasto Trends Inc., or approved equal.

SECTION 304
Force Main Material

304.01 Introduction

This Section applies to materials to be used for the construction of force mains.

For materials to be used for gravity sewers refer to Section 302.

For materials to be used for laterals refer to Section 303.

For materials to be used for manholes refer to Section 305.

304.02 Allowable Force Main Material

The following pipe materials are the only materials that may be used for sanitary sewer force main installations:

Material	Designation	
	ASTM	AWWA
Polyvinyl Chloride Pipe (PVC)	D 2241	C900 C905
High Density Polyethylene Pipe (HDPE)	F 714	C906
Ductile Iron Pipe (DIP)	A 746	C151
Prestressed Concrete Cylinder Pipe	.....	C301

304.03 Polyvinyl Chloride (PVC) Pipe

The minimum requirements for PVC pipe for force mains are as follows:

1. Material

   PVC force main pipe shall conform to ASTM D 2241, AWWA C900 or AWWA C905.

   For ASTM D 2241, the material shall conform to ASTM D 1784, Cell Class 12454 and a hydrostatic design stress of 2000 psi. The minimum pressure class/SDR rating shall be Class 200/SDR 21.

   For AWWA C900 the material shall conform to ASTM D 1784 for cell class 12454 and a hydrostatic design basis of 4000 psi. The minimum pressure class/DR rating shall be Class 200/DR 14.

   For AWWA C 905 the material shall conform to ASTM D 1784 for cell class 12454 and a hydrostatic design basis of 4000 psi. The minimum pressure class/DR rating acceptable shall be Class 200/DR 25.

2. Joints

   Joints shall be a bell and coupling push on type with joint restraints as needed.

   Joint restraints shall be Megalug® style mechanical joints for PVC pipe as manufactured by EBAA IRON or approved equal.

   The push on joint and gaskets shall meet the requirements for ASTM D 3139 and F 477.

3. Fittings

   Fittings shall be restrained joint ductile iron fittings conforming to ANSI A21.10/AWWA C110 and ANSI A21.11/AWWA C111. Restrained joints shall be Megalug® style for PVC as manufactured by EBAA Iron, or approved equal.

4. Rejection of Damaged Pipe

   Pipe possessing the following defects may be rejected for installation: variation from straight centerline; elliptical shape; illegible markings as required herein; deep or excessive gouges or scratches of the pipe wall; fractures, punctures, or cracks passing through the pipe wall; damaged ends where such damage would prevent making a satisfactory joint.

5. Markings

   Each length of pipe must be marked per ASTM and AWWA and at a minimum with the following information: name of manufacturer, tradename or trademark, nominal pipe size, production/extrusion code, material and cell class designation, and ASTM designation.

304.04 High Density Polyethylene (HDPE) Pipe

The minimum requirements for HDPE pipe for force main applications are as follows.

1. Material

   Materials used for the manufacture of HDPE pipe shall be extra high molecular weight, high density ethylene/hexane copolymer PE 3408 polyethylene resin meeting the requirements of ASTM D 3350 with a cell classification of PE345434C for materials in accordance with ASTM F 714, DR11 or PE345443C for materials in accordance with AWWA C906, DR14. Pipe shall be sized in accordance with DIPS. All material shall have a hydrostatic design basis of 1600 psi.

   The pipe shall contain no recycled compound except that generated in the manufacturer's own plant from resin of the same specification from the same raw material. All material shall be listed by the Plastic Pipe Industry in the name of the pipe manufacturer and shall be based on ASTM D 2837 and PPI TR-3 testing and validation for samples of the pipe manufacturer's production pipe.

2. Joints

   HDPE pipe shall be joined into continuous lengths on the job site above ground. The joining method shall be the butt fusion method and shall be performed in strict accordance with the pipe manufacturer's recommendations. Electrofusion shall not be used except as needed to connect adjacent directionally drilled sections which are to be connected in the trench bottom. Mechanical joint adapters are required to mechanically connect the HDPE pipe to the main line.

   Joint restraint to prevent axial separation shall be incorporated into the design of the sleeve or coupling used to connect HDPE pipe plain ends. Internal pipe wall stiffeners must be used when restraining HDPE. The restrained coupling system shall be Series 4800 manufactured by EBAA Iron, Inc. or an approved equal.

3. Fittings

   Fittings shall be either HDPE or ductile iron.

   HDPE fittings shall be manufactured in accordance with ASTM D 3261 by injection molding, a combination of extrusion and machining or fabricated from HPDE pipe conforming to this Standard. Fittings shall be fully pressure rated and provide a working pressure equal to the adjacent pipe with an included two (2) to one (1) safety factor.

   Ductile iron fittings shall be restrained joint ductile iron fittings conforming to ANSI A21.10/AWWA C110 and ANSI A21.11/AWWA C111 with MJ Adapters.

4. Rejection of Damaged Pipe

   Pipe possessing the following defects may be rejected for installation: variation from straight centerline; elliptical shape; illegible markings as required herein; deep or excessive gouges or scratches of the pipe wall or lining, fractures or cracks in the pipe wall or lining, damaged ends where such damage would prevent making a satisfactory joint; delamination of linings, cracking and crazing of liner, or other noticeable defects in pipe manufacture.

5. Markings

   During the extrusion production, the HDPE pipe shall be continuously marked per ASTM and AWWA with durable printing with at a minimum the following: nominal pipe size, dimension ratio, pressure rating, trade name, material classification, certification bases, and date.

6. Handling and Storage

   In addition to the requirements in Section 301.05, when moving fused sections of pipe, chains or cable type chokers shall be avoided; nylon slings are preferred. Care must be exercised to avoid cutting or gouging the pipe.

304.05 Ductile Iron Pipe (DIP)

The minimum requirements for ductile iron pipe for force main applications are as follows.

1. Material

   Pipe shall be centrifugally cast in metal or sandlined molds and shall conform to ANSI A21.51/AWWA C151. The minimum pipe wall thickness allowed shall be Class 250 for all sizes.

2. Fittings

   Fittings shall be push on or mechanical joint, iron or ductile iron conforming to ANSI A21.10/AWWA C110.

3. Coatings

   Outside surfaces of the pipe and fittings shall be bituminous-coated complying with ANSI/AWWA A21.51/C151 and ANSI/AWWA A21.10/C110.

4. Joints and Gaskets

   Pipe joints shall be push-on type or mechanical-type complying with ANSI A21.11/AWWA C111 unless otherwise noted on the drawings.

   Restrained joints shall be Megalug® by EBAA Iron, Flex-Ring or Lok-Ring by American Pipe, TR-Flex and Field Lok by US Pipe, Snap-Lok or Bolt-Lok by Griffin Pipe, or other similar manufacturer supplied systems.

   Gaskets for mechanical joints, push on joints, and restrained joints shall conform to ANSI A21.11/AWWA C111.

5. Rejection of Damaged Pipe

   Pipe possessing the following defects may be rejected for installation: variation from straight centerline; elliptical shape; illegible markings as required herein; deep or excessive gouges or scratches of the pipe wall or lining, fractures or cracks in the pipe wall or lining, damaged ends where such damage would prevent making a satisfactory joint; delamination of linings, cracking and crazing of liner, or other noticeable defects in pipe manufacture.

WEIHE ENGINEERS
Land Surveying | Civil Engineering
Landscape Architecture
10505 N. College Avenue
Indianapolis, Indiana 46280
weihe.net
317 846 - 6611
800 452 - 6408
317 843 - 0546 fax
ALLAN H. WEIHE, P.E., L.S. - FOUNDER

REVISIONS AND ISSUES	DATE	BY
SUBMITTED FOR COUNTY SURVEYOR REVIEW	10.16.2015	BJS
ISSUED FOR TAC REVIEW	01.29.2016	BJS

PROJECT NO. W15.0316
DWG. NAME v150316-C904 SS spec.dwg
DESIGNED BY: RJW
DRAWN BY: RJW
CHECKED BY: BJS
DATE: 01.29.2016

STEVEN SCOTT RUCKER P.E. 11300279

PREPARED FOR: of WESTFIELD
17651 SUN PARK DRIVE, WESTFIELD, IN 46074

CITIZENS - SANITARY SEWER SPECIFICATIONS
Part of SW-4 Section 3B, Township 19 North, Range 3 East, Washington Township, Hamilton County, Indiana

SHEET NO. C904

PROJECT NO. W15.0316

LOCATION: H:\2015\w150316\Engineering\design\consel\w150316-C904 SS spec.dwg
DATE/TIME: January 28, 2016 - 2:47pm
PLOTTED BY: schoeb

6. Markings

The size and class designations for the various classes of pipe and fittings shall be cast onto fittings in raised numerals, and cast or stamped on the outside of each section of pipe. Weights shall be plainly and conspicuously painted in white on the outside of each section of pipe and each fitting after the exterior coating has hardened.

304.06 Prestressed Concrete Cylinder Pipe (PCCP)

The minimum requirements for pre-stressed concrete cylinder pipe for force main applications are as follows:

1. Material

The pipe shall conform to the requirements of AWWA C301 or C303. C301 pipe shall be designed in accordance with AWWA Standard C304. C303 pipe shall be designed in accordance with the procedures shown in AWWA Manual M9, Chapter 7. The pipe design shall be based on the working pressures, surge pressures, earth cover, and live load criteria provided in the contract documents. The external load design shall be suitable for the installation conditions shown in the project plans.

2. Joints

Steel and rubber gaskets shall conform to AWWA C-301 or AWWA C-303 as appropriate.

3. Fittings and Special Sections

Fittings and special pipe sections shall be designed and fabricated to the requirements of the appropriate AWWA standards and AWWA Manual M9 Chapter 8, as applicable.

All required flanges shall conform to AWWA C207 requirements for standard steel flanges corresponding to the pipe working pressures.

4. Rejection of Damaged Pipe

Pipe possessing the following defects may be rejected for installation: variation from straight centerline; elliptical shape; illegible markings; fractures in excess of 0.01 inch, cracks passing through the pipe wall; damaged ends where such damage would prevent making a satisfactory joint, voids and/or honeycombing in the pipe walls, or other noticeable defects in pipe manufacture.

5. Marking of Pipe

The inside of each pipe section, fitting, or special pipe section shall be plainly marked with the pipe diameter and pressure class for which the section or fitting is designed. In addition, all fittings and special pipe sections shall be marked with an identifying number or station corresponding to that shown on the layout schedule. All fittings or special sections requiring special field orientation during installation shall be properly marked.

SECTION 305
Manhole Materials and Appurtenances

305.01 Introduction

This Section applies to the materials and specifications for manholes, wetwells, valve vaults, meter vaults and appurtenant structures.

305.02 Precast Sanitary Manholes

Precast manholes, including drop manholes, shall be per Figures 300.01 through 300.06 and the following:

1. Material

Precast reinforced concrete manholes shall be manufactured, tested, and marked in accordance to ASTM C 478. Manhole sections shall not be installed until at least five (5) days after having been cast unless permitted in writing by the Department.

2. Joints

All joints between precast manhole elements (excluding adjusting rings) shall have a rubber gasket per ASTM C 443, and one-half (½) inch diameter butyl rubber rope sealant per ASTM C 990.

3. Lift Holes

No "see through" lift holes shall be allowed on precast concrete manholes.

4. Rejection of Damaged Manholes

Manholes possessing any of the following defects shall be subject to rejection.

a. Fractures or cracks passing through the shell, except for a single end crack that does not exceed the depth of the joint;

b. Defects that indicate imperfect proportioning, mixing and molding;

c. Surface defects indicating honeycombed or open profile; damaged ends, when such damage would prevent making a satisfactory joint;

d. The internal diameter of the manhole section shall not vary more than 1% from the nominal diameter;

e. Deviations more than one-quarter (¼) inch from the straight edge at any point across the top of the manhole cone section or riser ring;

f. Visible steel bars along the inside or outside surface of the manhole except for reinforcement stirrups or spacers used to position the cage during manufacture, and reinforcement bars visible at the manhole structure end, provided these reinforcement bar ends are properly grouted in conformance with applicable ASTM specifications, and/or

g. Illegible or unmarked manhole sections not clearly marked with date of manufacture, Tradename, size designation part number, or ASTM number.

5. Other Requirements

Precast manhole cones shall be as follows:

a. Eccentric offset type;

b. The top internal portion of the cone shall have a minimum four (4) inch uniform circumference to accept an internal chimney seal as shown in Figures 300.01 through 300.06; and

c. The top of the cone shall be cast to accept the one of the precast adjusting rings as shown in Figure 300.08.

305.03 Drop Manholes

Inside or outside drop manholes shall be constructed consistent with the requirements of Section 305.02.

305.04 Monolithic (Cast-In-Place) Sanitary Sewer Structures

Monolithic pour structures will be approved on a case-by-case basis provided plans and specifications identifying the concrete mix, steel reinforcement details, pipe connections, and manhole dimensions are submitted and approved prior to construction. Substantial field changes of the approved construction drawings shall be certified by the Engineer, and receive approval of the Division prior to completion of the proposed work.

305.05 Concrete Bases

Base sections for forty-eight (48) and sixty (60) inch diameter precast manholes shall be constructed with the base and first riser section as one complete integral (monolithic) precast unit.

The concrete base shall be as follows: a minimum of six (6) inch thickness for forty-eight (48) inch diameter structures and a minimum of eight (8) inch thickness for larger diameter structures.

Monolithic pour or precast manholes shall be constructed of Class A concrete having a compressive strength of 4000 psi.

Precast manholes seventy-two (72) inches in diameter and larger with separate base sections shall utilize a gasketed joint between the base section and first riser section.

305.06 Flow Channels and Bench Walls

The channels shall be shaped and formed for a clean transition with proper hydraulics to allow the smooth conveyance of flow through the manholes. The bench wall shall be formed from the invert to a minimum height of 80% of the inside diameter of the inlet and outlet pipes to form a "U" shaped channel. The bench top shall be constructed at a one-half (½) inch per foot slope from the manhole wall. Refer to Figure 300.07 for typical details of flow channels in manholes.

Where a flow channel is constructed as an integral part of the precast base, it shall be shaped and formed as described above, with the exception that the bottom of the flow channel may be formed from the bottom of inlet and outlet pipes if the pipe wall thickness is not greater than one (1) inch.

For cast-in-place flow channels, the bottom invert of all pipes entering a manhole shall be at least three (3) inches above the top of the base slab to the outlet invert so the finished sewer channel may be installed and shaped.

For connections to existing sanitary sewer structures, flow channels shall be shaped as if it were a new manhole.

305.07 Manhole Adjusting Rings

Only concrete adjusting rings are allowed.

Concrete adjusting rings shall conform to ASTM C 478 and be free from voids, cracks, and other defects. The adjusting ring shall be from the same manufacturer as the manhole cone section to assure compatibility and a watertight seal per Figure 300.08.

The minimum thickness of the concrete adjusting ring shall be four (4) inches.

305.08 Steps

Steps shall conform to the requirements of ASTM C 478 and be manufactured using steel rods encased in polypropylene plastic. Steps shall be factory installed when the manhole is manufactured.

305.09 Sewer to Manhole Connectors

Sewer pipe connections to manholes shall be made with resilient rubber connectors manufactured in accordance with ASTM C 923.

Connectors shall be secured to the manhole by either being cast-in or connected with an expandable stainless steel band. Connector shall be secured to the pipe with a stainless steel band. The stainless steel elements of the connector shall be totally non-magnetic, Series 305 stainless steel.

The connector shall be the sole element relied upon to assure a flexible, watertight seal from the sewer to the manhole.

The connectors shall be as manufactured by Kor-N-Seal, Press Seal, A-Lok, or approved equal.

305.10 Manhole Chimney Seal

Internal Manhole Chimney Seals shall consist of a flexible internal rubber sleeve, interlocking extensions, and stainless steel compression bands conforming to ASTM C 923.

The seal shall remain flexible throughout a 25-year design life, allowing repeated vertical movement of the frame of not less than two (2) inches and repeated horizontal movement of the frame of not less than one-half (½) inch. The sleeve portion of the seal shall be a minimum double pleated with a minimum unexpanded vertical height of 8, 10, or 13 inches, respectively. The sleeve and extension shall have a minimum thickness of three-sixteenths (3/16) inches and shall be made from a high quality rubber compound conforming to the applicable requirements of ASTM C 923, with a minimum 1500 psi tensile strength, a maximum 18% compression set, and a hardness (durometer) of 48 ± 5.

The area of the seal that compresses against the manhole frame/casting and the chimney/cone shall provide a watertight seal.

The bands shall be fabricated from 16 gauge stainless steel with no welded attachments and shall have a minimum adjustment range of two (2) diameter inches. Any screws, bolts, or nuts used to lock the band in place shall be stainless steel.

The internal seals shall be as manufactured by Cretex Specialty Products, NPC Specialty Products, or an approved equal.

305.11 Casting, Frames and Covers

Castings shall be as follows:

1. Catalog Number

The frame and cover shall be as follows:

a. Neenah R-1713-B-SP, or

b. East Jordan Iron Works Model 1022-1AGSMD.

All castings shall have a machined bearing surface with Type F concealed pickholes.

2. Markings

Sanitary sewer manhole covers shall be a solid lid casting as detailed in Figure 300.09. The words "Sanitary Sewer" and "City of Indianapolis" must be cast in recess letters two (2) inches in height onto solid lid covers.
Westfield - The words "Sanitary Sewer" must be cast in recess letters two (2) inches in height on solid lid covers.

3. Requirements

Castings shall be manufactured in accordance with ASTM A 48 - Class 35B,

and have a minimum tensile strength of 35,000 psi.

Boltdown castings shall be provided in Special Flood Hazard Areas.

Casting shall be of uniform quality, free from blow holes, porosity, hard spots, shrinkage, distortion, or other defects. They shall be smooth and well-cleaned by shot blasting or other approved method.

All castings shall be manufactured true to pattern; component parts shall fit together in a satisfactory manner. Round frames and covers shall be of non-rocking design or shall have machined horizontal bearing surfaces to prevent rocking and rattling under traffic. All castings shall be fully interchangeable.

CHAPTER 400

INSTALLATION

SECTION 401
Installation Requirements Applicable to Sanitary Sewers, Force Mains, and Laterals

401.01 Introduction

This Section provides the minimum installation requirements common to sanitary sewers, force mains, and laterals.

For specific installation requirements for laterals refer to Section 402.

For specific installation requirements for manholes, wetwells, valve vaults, and other appurtenant structures refer to Section 403.

For trenchless installation requirements refer to Section 404.

401.02 Workmanship

The minimum workmanship requirements during construction are as follows:

1. Establishment of Line and Grade

The Contractor, Engineer, and/or Land Surveyor shall furnish and set all line and grade stakes (HUB).

A Professional Engineer or Land Surveyor registered in the State of Indiana will be required to set, or oversee the setting of, all bench mark stakes necessary for the installation of any sanitary sewer facility being constructed. Bench marks shall be set in strategic locations within the project to facilitate the installation of grade stakes. Horizontal and vertical control will be required to be provided with record drawings to be submitted to the Division upon completion of the project.

The method of establishing and following line and grade in conformance with the approved construction plans may be determined by the Contractor.

2. Material Handling

Suitable tools and equipment shall be used for the safe and convenient handling of all materials and for the installation of all sanitary sewer facilities. All material shall be unloaded with care. Care shall be taken to prevent pipe coatings, encasements or wrappings from being damaged.

Each section of pipe shall be carefully examined for cracks and other defects prior to installation. Pipe or fittings found to be cracked, broken, or otherwise defective either before, during, or after installation, shall be removed and replaced with material free from defects.

All pipes, gaskets, and other fittings shall be thoroughly cleaned prior to installation and shall be kept clean during construction.

3. Point of Commencement and Direction of Laying Pipe

The point of commencement for laying pipe should be the lowest point in the proposed line. Provisions for beginning construction at other than the lowest point in the proposed line shall be approved by the RPR. All bell and spigot pipe shall be laid with the bell end, or with the receiving groove end of tongue and groove pipe pointing upgrade or toward the lift station end of force mains.

Each pipe shall be laid on an even firm bed, as required in Section 401.06 throughout its length, so that no uneven strain will come to any single portion of the pipe. Particular care shall be taken to prevent the total load from bearing on the pipe sockets. All bells of bell and spigot pipes shall be carefully placed into a receiving hole excavated into the pipe bedding material.

All pipes shall be properly joined utilizing the manufacturer's assembly marks. Adequate pressure shall be applied to the center of each tongue and groove pipe to ensure the proper joint seal is achieved.

4. Construction Bulkheads

Before extending a sanitary sewer, the Contractor shall provide a watertight bulkhead or seal, in the existing sewer immediately downstream of the point of connection or the most practical location as determined by the RPR. This bulkhead shall be left in place until the new sanitary sewer has been cleaned of all accumulated water and debris and accepted by the Division.

During all work stoppages in construction of the sanitary sewer, the open face of the last pipe laid shall be plugged with a watertight seal to prevent sand, water, earth, or other materials from entering the pipe.

Whenever pipe and special castings are required to be cut, the cutting shall be done by skilled workers in such manner as to leave a smooth end at right angles to the axis of the pipe without damage to the pipe casting or lining. CUTTING TORCHES SHALL NOT BE USED.

5. Minimum Construction Cover

Until such time as a minimum of four (4) feet of compacted fill material has been placed over the installed sanitary sewer, lateral, or force main, the Contractor shall not use heavy equipment in such a way as to cause damage to these pipelines or structures.

6. Laying of Pipe in Cold Weather

The Division or Department reserves the right to order pipe installation discontinued whenever, in their opinion, there is danger of the quality of work being impaired because of cold weather. The Contractor shall be responsible for heating the pipe and jointing material so as to prevent freezing of joints. No flexible or semi-rigid pipe shall be laid when the air temperature is less than 32° F unless proper precautions, per the manufacturer's recommendations, are taken by the Contractor and the method is approved by the Engineer and the Division or Department.

When pipes with rubber gaskets or resilient type joints are to be laid in cold weather, sufficiently warm the gasket or joint material to facilitate making a proper joint.

No portion of a sanitary sewer facility shall be installed directly onto frozen ground or backfilled with frozen material.

7. Construction Activities within the Public Right-of-Way

All construction activities within the public right-of-way, including but not limited to surface removal, backfilling, and restoration, shall be per the latest version of the Department of Metropolitan Developments "Regulations for Cuts within the Public Right-of-Way" and the City of Westfield Construction Standards and Specifications or other applicable requirements or the Westfield Standards of Roadway Construction."

401.03 Trench Box and Sheeting

When required by the Occupational Safety and Health Act (OSHA) or any other entity having jurisdiction to protect life, property, or the work, sufficient protective measures shall be utilized in accordance with 29 CFR Part 1926 or any other applicable regulation.

Upon completion of the work, all temporary forms, shores, and bracing, other than as specified herein, shall be removed. The minimum required density of structural backfill shall not be reduced due to trench box pulling. All voids left by the removal of sheeting shall be carefully filled with properly compacted bedding material.

The Contractor shall employ adequate safeguards to prevent movement of the pipe joint. If movement should occur, the Contractor shall reinstall the pipe.

Any damage to pavement or other structures due to sheeting, shoring, or bracing shall be repaired by the Contractor at his own expense.

Sheeting and bracing which is to remain in place after construction shall be cut off three (3) feet below the finished grade elevation.

The City of Indianapolis or Citizens Wastewater of Westfield, LLC will not assume any liability for the actions of the Owner, Contractor, or their agent(s), in the performance of the required sheeting, shoring, and bracing operations.

401.04 Trench Dewatering

Where groundwater is encountered, the Contractor shall make every practical effort necessary to secure a dry trench bottom prior to laying pipe and/or the installation of the sanitary sewer facility. The Contractor shall provide, install, and operate sufficient trenches, sumps, pumps, hoses, piping, wellpoints or other means necessary to depress and maintain the groundwater level below the base of the excavation. In addition, the dewatering shall be sufficient to stop weeping and running water from displacing soil and entering the trench through the trench walls.

If unable to remove the standing water in the trench, the Contractor shall over-excavate the proposed bottom grade of the sewer bedding, and place not less than six (6) inches of either No. 2 crushed stone, No. 8 crushed stone, or No. 8 fractured faced aggregate in the over-excavated area.

The Contractor shall be responsible for diverting or removing surface runoff and other accumulations of surface water from excavations in compliance with all applicable rules and regulations.

The City will not assume any liability for the actions of the Owner, or their agent(s), in the performance of the required dewatering operations.

The Division or Department shall reserve the right to cease installation activities when trench conditions are not in conformance with this Manual.

Under no circumstances shall surface water and/or groundwater be discharged to, disposed of, or allowed to flow into the City of Indianapolis or Westfield sanitary sewer system except as provided in an Industrial Discharge Pretreatment Permit.

401.05 Trench Installations

The minimum requirements for trench installations are as follows:

1. Trench Width

The minimum width of the trench at and below the top of the sanitary sewer, lateral, or force main shall be only as wide as necessary for proper installation and backfilling.

The minimum trench width for sanitary sewers, laterals, and force mains shall not be less than the greater of the following:

Minimum Width = Pipe O.D. + 16 inches

or

Minimum Width = (Pipe O.D. x 1.25) + 12 inches

Under no circumstances shall the distance from the trench wall to the outside edge of the pipe be less than six (6) inches for pipes six (6) inches and less, and eight (8) inches for pipes eight (8) inches and larger.

For flexible conduits, the lateral resistance of in-situ soils shall be of sufficient stiffness to provide the required pipe support. Where unstable trench sidewall

conditions exist, or where trench depth dictates the use of a moveable trench box, the Engineer shall determine the width of compacted bedding and backfill material necessary to provide adequate pipe side support.

The minimum and maximum trench widths above the top of the sanitary sewer, lateral, and force main shall be determined by the Contractor and shall be in conformance with all applicable safety regulations including, but not limited to, those promulgated by OSHA.

2. General Trenching Requirements

Whenever pipe trenches are inadvertently excavated below the designed bedding bottom, the Contractor shall fill the over-excavated area with compacted No. 8 crushed stone or No. 8 fractured face aggregate and shaped to form a firm, uniform trench base.

In cases where a firm foundation is not encountered at the required grade, the Contractor shall remove the unstable material to a sufficient depth not less than six (6) inches and replaced with either No. 2 crushed stone, No. 8 crushed stone, or No. 8 fractured faced aggregate. When compacted and properly shaped, the fill material shall produce a uniform and stable foundation along the entire length of the pipe. If more than one (1) foot of unstable material is encountered, the Contractor shall take additional measures to ensure that additional stabilization is provided, such as geotextile fabric wrapping of the trench section or as approved by the Department.

All rocks, boulders and stones six (6) inches in diameter and larger shall be removed. Boulders or rocks are not to be used for any portion of the trench backfill.

The pipe trench shall not be excavated more than one hundred (100) feet in advance of pipe laying unless approved by the RPR or Department.

In cases where material is deposited along open trenches, the material shall be placed and protected so that no damage will result to the work or adjacent property as a result of rain or surface wash.

401.06 Bedding and Backfill Requirements

Bedding, haunching, initial backfill, and final backfill requirements are the same for sanitary sewers, laterals, and force mains.

The minimum requirements are shown in Figures 400.01 through 400.03 and are as follows:

1. Bedding, Haunching, and Initial Backfill.

The requirements are determined by the type and size of pipe being installed and are as follows:

a. Flexible Pipe – PVC, HDPE, Centrifugally Cast Fiberglass Reinforced Polymer Mortar, and Closed Profile Large Diameter PVC

Bedding, Haunching, and Initial Backfill – No.8 crushed stone or No. 8 fractured-faced aggregate. The minimum depths shall be as follows:

Pipe Size, inches	Depth Below Barrel, inches	Depth Above Top of Pipe, inches
6 or less	4	4
8 to 15	4	12
18 and larger	8	12

b. Semi-Rigid Pipe – Ductile Iron Pipe (DIP)

Bedding, Haunching, and Initial Backfill – No. 8 crushed stone or No. 8 fractured-faced aggregate. The minimum depths shall be as follows:

Pipe Size, inches	Depth Below Barrel, inches	Depth Above Top of Pipe, inches
8 to 16	4	6
18 and larger	8	6

c. Rigid Pipe – Reinforced Concrete Pipe (RCP) and Prestressed Concrete Cylinder Pipe (PCCP)

i. Bedding and Haunching - No. 8 crushed stone or No. 8 fractured faced aggregate a minimum of eight (8) inches below the pipe barrel to the springline (1/2 the outside diameter) of the pipe.

ii. Initial Backfill - Clean fill material free of rocks larger than six (6) inches in diameter, frozen lumps of soil, wood, or other extraneous material unless the construction is within five (5) feet of pavement then Section 401.06.2.b.i. shall apply.

For all installations, the bedding material shall be placed in the trench bottom and compacted prior to laying the pipe.

The bell holes shall be excavated for bell and spigot pipe so the entire pipe barrel rests on the bedding. The bedding shall be such that after the pipe has been placed to line and grade, there remains a four (4) inch minimum depth of material below the pipe barrel and a minimum of three (3) inches below the bell.

For all installations, the haunching material shall be shovel sliced or otherwise carefully placed and "walked" or hand tamped to the springline (1/2 the outside diameter) to ensure compaction of the haunch area and complete filling of all voids. The initial backfill shall be added in six (6) inch lifts "walked" in for compaction.

2. Final Backfill

Final backfill requirements are determined by the location of the excavation and are as follows:

a. Excavations within existing roadways or public right-of-ways.

Final backfill requirements shall be per the latest revision of the Department of Metropolitan Developments "Regulations For Cuts Within The Public Right-of-Way" and the City of Westfield Construction Standards and Specifications or other applicable requirements.

b. For all other installations.

Final backfill requirements are as follows:

i. Within five (5) feet of the edge of pavement, curbs, gutters, or similar structures:

Trenches shall be backfilled with structural "B-Borrow" for structural installations per INDOT Standard Specifications - Section 211. Backfill shall be compacted to achieve not less than 95% Standard Proctor Dry Density per INDOT Standard Specifications Section 203.23. The Contractor shall use in-house or independent testing to verify proper compaction. The Division or Department may require

independent testing to verify Contractor results at any time during the duration of the project.

Backfill shall be added and compacted in twelve (12) inch balanced lifts by means of mechanical tampers. If the Contractor can demonstrate, through testing, the compaction requirements can be met with lifts greater than twelve (12) inches, it may be approved on a case-by-case basis. The maximum compaction depth shall not exceed six (6) feet.

Flowable fill may be used as a substitute for structural "B-Borrow."

Westfield – Sanitary Sewers shall be covered with at least twelve (12) inches of bedding material and thirty six (36) inches of approved backfill.

ii. Outside five (5) feet of the edge of pavement, curbs, gutters, or similar structures:

Trench shall be backfilled with clean fill material free of rocks larger than six (6) inches in diameter, frozen lumps of soil, wood, or other extraneous material.

Jetting or flooding of the backfill shall not be used to meet the compaction requirements.

401.07 Locating (Tracer) Wire

For all force main and lateral installations, a 10-gauge solid copper insulated locating (tracer) wire shall be installed as follows:

1. Force Mains

Wire shall be installed on top of the initial backfill in one continuous length between the lift station valve vault and the force main discharge manhole.

The wire shall be brought up to ground level every four hundred (400) feet through a vinyl-coated aluminum riser pipe with a cap.

If any appurtenant structure, such as an air release valve, is required as part of the force main installation, the wire shall be cut with each end entering the structure under the casting frame.

2. Laterals

Wire shall be installed (taped) on the top of the pipe along the entire length of the lateral from the sewer to the cleanout. The lateral may be installed in either one or two phases. The requirements for each phase are as follows:

a. One phase

When the entire lateral is to be constructed in one phase (from the sanitary sewer to the cleanout), the wire shall be installed in one continuous length along the entire length of the lateral. The wire shall be exposed at the cleanout for access.

b. Two phases

When the lateral is installed in two phases, the first as part of the sewer construction to the edge of the right-of-way (lateral stub) and the second as part of the building construction from the lateral stub to the cleanout, the wire shall be installed as follows:

i. Lateral as part of the sanitary sewer installation from the sewer to the right-of-way (lateral stub).

Wire shall be installed along the length of lateral beginning at the

sanitary sewer and terminating at the stub or locating rod. The wire shall be easily accessible for future extension to the cleanout.

ii. Lateral as part of the building construction from the lateral stub to the cleanout:

Wire shall be connected to the wire at the lateral stub and installed along the remaining length of lateral terminating at the cleanout. The wire shall be exposed at the cleanout for access.

All wire-to-wire connections, such as those for laterals installed in two phases, shall be joined using a DBR Direct Burial Splice Kit as manufactured by 3M Electrical Products Division or a Department approved equal.

401.08 Abandoning Sanitary Sewer Facilities

Sanitary Sewer Facilities shall be abandoned as follows:

1. Combined Sewers, Sanitary Sewers, and Force Mains

Combined sewers, sanitary sewers, or force mains to be abandoned shall be bulkheaded with mortar and an eight (8) inch thick concrete brick wall. The facility being abandoned shall be filled with sand or cellular concrete and plugged, unless an alternate plan is approved by the Division or Department.

Service shall be maintained within sanitary and combined sewers until the Division orders bulkheads placed.

No timber bulkheads shall be allowed.

2. Laterals

Numerous existing buildings use common or shared laterals. The Contractor shall determine if the lateral is common/shared prior to construction.

The requirements to abandon laterals, shown in Figure 400.04, are as follows:

a. If the lateral serves one building and is NOT part of a common/shared lateral:

The end of the lateral shall be sealed with a manufactured watertight cap/stopper made specifically for the purpose of sealing/capping the end of a sanitary sewer. The cap/stopper shall be installed per manufacturer's recommendation and in such a way to prevent any source of water from entering the sanitary sewer system. Any device or material that may slide into the lateral and potentially cause a blockage or obstruction in the mainline sewer will not be allowed.

The cap/stopper shall be installed on a defect free portion of the lateral at the right-of-way line on the building side of the street, or at the edge of the sanitary easement if located in the rear yard. If defects are found, the Contractor shall excavate toward the mainline sanitary sewer until an acceptable segment of lateral is found.

At the cap/stopper, a one-half (1/2) inch cast iron locator rod or magnetic locator tape shall be installed to within three (3) feet of the ground surface to provide for ease of location of the stub.

b. If the lateral serves more than one building and IS part of a common/shared lateral:

i. If at least one service from the common lateral is intended to remain, the connecting fitting for the laterals shall be removed and replaced with an elbow of sufficient angle to provide a smooth transition between the existing portions of the lateral. Elbow shall be a manufactured fitting and shall be installed per manufacturer's

recommendation to assure a watertight seal.

ii. If all services from the common lateral are to be abandoned, requirements per Section 401.08.2.a shall apply.

When connections are made between non-similar pipe materials, a non-shear flexible coupling shall be used such as manufactured by Mission, Fernco, or approved equal.

Bedding and backfill requirements for abandoning any lateral shall be per Section 401.06.

3. Structures

Unless otherwise specified, all structures to be abandoned shall be removed to a depth of three (3) feet below the proposed ground elevation, or existing street grade, whichever is lower. The portions of the structure which are abandoned and left in place shall have holes drilled in a sufficient number to allow groundwater to enter and exit. The structure shall be backfilled with sand or B-Borrow and compacted to 95% Standard Proctor Dry Density. The Division or Department may modify the requirements if deemed necessary.

All existing pipe, equipment, or any other material is the property of the City of Indianapolis or Citizens Wastewater of Westfield, LLC. When abandoning any sanitary sewer facility, the contractor shall contact the Department to determine if any of the abandoned material is to be salvaged. The determination will be at the sole discretion of the Department. The Contractor shall deliver all salvageable material and/or equipment to a location within the Indianapolis Sanitary District as determined by the Department. The Contractor shall be responsible for disposal of all material not being salvaged.

401.09 Embankment Installations

For embankment installations, a minimum width of properly compacted bedding and backfill material is required to ensure that adequate stiffness of the pipe envelope is developed.

The Engineer shall determine the minimum embedment width, utilizing those bedding and backfill materials specified herein, in full conformance with those minimum standards set forth by the American Association for State Highway and Transportation Officials Standard Specifications for Highway Bridges, latest revision. Such factors as pipe stiffness, embedment stiffness, nature of in-situ soil, and anticipated construction and service loading shall be evaluated.

SECTION 402
Installation Requirements Specific to Laterals

402.01 Introduction

This Section provides the minimum installation requirements specific to laterals.

For installation requirements common to sanitary sewers, force mains, and laterals refer to Section 401.

For specific installation requirements for manholes, wetwells, valve vaults, and other appurtenant structures refer to Section 403.

For trenchless installation requirements refer to Section 404.

402.02 General Requirements

Unless specifically stated in this Section, all other installation requirements for laterals shall be per Section 401.

Laterals shall be installed under the same or similar requirements and guidelines as sanitary sewers. Several critical clarifications for certain requirements, not intending to be all inclusive, are as follows:

1. Trench installation requirements, including but not limited to trench widths, shall be the same as for sanitary sewers per Section 401.05.

2. Bedding and backfill requirements shall be the same as for sanitary sewers per Section 401.06.

3. Only materials listed in Section 303.02 shall be used for laterals.

4. Connections to sanitary sewers shall be made per Section 201.05.

5. Locating wire shall be installed per Section 401.07.

Typical Lateral Connections are shown in Figures 400.05 and 400.06.

402.03 Lateral Stubs

Laterals are often installed in two phases: the first as part of the sanitary sewer installation, the lateral stub, and the second as part of the lateral installation when the building is constructed.

When installing the portion of the lateral as part of the sanitary sewer installation (the lateral stub), the Contractor shall terminate the lateral at the right-of-way line or easement, and plug the end with a manufactured watertight plug. A one-half (1/2) inch metal locator rod and copper tracer wire per Section 401.07 shall be installed at the end of the plugged line to within three (3) feet of finished grade to provide for ease of location of the stub.

Westfield – Backflow Preventers shall be utilized per the Standard Drawing.

402.04 Controlled Settlement Joint

A Controlled Settlement Joint, or "Slip Joint", shall be installed per manufacturer's recommendation on all lateral riser pipes exceeding five (5) feet in vertical length. Figures 400.06 and 400.07 show a typical installation of the Controlled Settlement Joint and the maximum angle in which the joint should be installed.

Refer to Section 303.03 for the Controlled Settlement Joint material standard.

The riser pipe and fittings shall be bedded per Section 401.06.

402.05 Saddle Connections to Sewers

Saddle connections are only allowed if a manufactured fitting is not available and the sewer is not vitrified clay pipe (VCP).

Saddle connections shall be as follows:

1. The connections shall be a seated saddle that will not allow the lateral to protrude into the mainline sewer.

2. The saddle shall have at least two (2) stainless steel bands connecting around the existing sewer.

3. The cut into the existing sewer shall be core drilled. Saw cuts and hammer taps are not allowed.

When a manufactured fitting is not available when connecting to a VCP sewer, the connection shall be made by installing a new PVC manufactured wye fitting. Non-shear couplings shall be used to connect the new manufactured fitting to the existing sewer.

402.06 Connections to Brick Sewers

Connections to brick sewers will be evaluated on a case-by-case basis.

If the connection is allowed, a concrete collar shall be installed to provide reinforcement to the brick sewer as shown in Figure 400.08. The connection shall be core-drilled after the collar has been installed.

A rubber connector with a stainless steel clamp meeting the requirements of ASTM C 923 shall be used for the connection. The connector shall be a Kor-N-Tee or approved equal.

If connections to the brick sewer can be avoided, the Division or Department may require the lateral to be connected to an alternate connection point.

402.07 Connections to Pressure-rated PVC Pipe

When connecting laterals to gravity sewers that use pressure-rated PVC pipe (ASTM D 2241, AWWA C 900, or AWWA C905), adapters may be required to assure proper connection to the sewer.

The adapters shall meet the same requirements as the pressure-rated pipe.

10505 N. College Avenue
Indianapolis, Indiana 46280
weihe.net
317 | 846 - 6611
800 | 452 - 6408
317 | 843 - 0546 fax
ALLAN H. WEIHE, P.E., L.S. - FOUNDER

WEIHE ENGINEERS
Land Surveying | Civil Engineering
Landscape Architecture

PROJECT NO.: W15.0316
DWG NAME: w150316-C904 SS spec.dwg
DESIGNED BY: RLW
DRAWN BY: RLW
CHECKED BY: BJS
DATE: 01.29.2016

DATE	BY	REVISIONS AND ISSUES
10.16.2015	BJS	SUBMITTED FOR COUNTY SURVEYOR REVIEW
01.29.2016	BJS	ISSUED FOR TAC REVIEW

STEVEN SCOTT RUCKER REGISTERED PE11300279 STATE OF INDIANA PROFESSIONAL ENGINEER
APPROVAL PENDING NOT FOR CONSTRUCTION

STEVEN SCOTT RUCKER P.E. 11300279

PREPARED FOR: Culver's of WESTFIELD
17651 SUN PARK DRIVE, WESTFIELD, IN 46074

CITIZENS - SANITARY SEWER SPECIFICATIONS
Part of SW/4, Section 36, Township 19 North, Range 3 East, Washington Township, Hamilton County, Indiana

SHEET NO. C905
PROJECT NO. W15.0316

LOCATION: H:\2015\w150316\Engineering\design\conset\w150316-C904 SS spec.dwg
LAYOUT: C905
DATE/TIME: January 28, 2016 - 2:47pm
PLOTTED BY: schoeffb

SECTION 403
Installation of Precast Manholes, Wet wells, Valve Vaults, or other Appurtenant Structures

403.01 Introduction

This Section provides the minimum installation requirements for manholes, wet wells, valve vaults, and other appurtenant structures.

For clarity, only manholes are referenced throughout this Section. Unless noted, all other structures are to be installed in accordance with the same requirements.

The minimum requirements are show in Figures 300.01 through 300.06.

403.02 Bedding

The bedding for all manholes shall be a minimum of six (6) inches of No. 8 crushed stone or No. 8 fractured-face aggregate.

The stone and/or aggregate shall be placed to form a stable base.

Where poor or unstable soil conditions exist, or over excavation has occurred, additional No. 8 crushed stone, No. 8 fractured faced aggregate, No. 2 stone, or Class B concrete shall be used to form a stable base.

403.03 Backfilling

Manhole backfilling and compaction requirements shall comply with the minimum requirements for the adjacent sanitary sewer pipe as stated in Section 401.06.

403.04 Placement of Manhole Sections

Precast manhole sections shall be placed and aligned to provide vertical sides. The completed manhole shall be rigid, true to dimensions, and watertight.

The joints between manhole sections shall be properly sealed utilizing an approved rubber gasket and butyl rubber rope.

403.05 Placement of Adjusting Rings

Where one (1) solid riser or barrel section cannot be used, final adjustments in elevation of the casting frame and cover shall be accomplished by the use of precast concrete adjusting rings of a minimum thickness of four (4) inches per Section 305.07 and as shown in Figure 300.08. The total number of adjusting rings shall not exceed three (3) and the total height of adjusting rings shall not exceed twelve (12) inches.

Concrete adjustment rings less than four (4) inches thick are not allowed.

A water tight seal shall be provided between the cone section of the manhole and adjusting ring, each adjoining adjusting ring, and between the adjusting ring and casting by the use of two (2) rows of one-half (1/2) inch diameter cords of extrudable preformed gasket material, non-asphaltic mastic, or trowelable grade butyl rubber, as shown on Figure 300.08. This material shall be placed in joints and keyways and be of sufficient quantity to completely fill the joint cavity.

The use of brick or block in lieu of adjustment rings is not allowed.

403.06 Butyl Rubber Backplaster

A trowelable grade butyl rubber base exterior backplaster material one-quarter (1/4) inch minimum thickness, when dry, shall be installed on the outside of the manhole at each joint, extending six (6) inches above and below the joint. It shall also be placed on the chimney section from two (2) inches below the bottom adjustment ring on the cone section to, and covering, the base of the casting.

403.07 Internal Manhole Chimney Seal

Internal Chimney Seals per Section 305.10 shall be installed on the joints of all manholes between the casting frame and the cone section per manufacturer's recommendation.

403.08 Connections To Manholes

Sanitary sewer connections to existing manholes shall be core-drilled and made using a flexible rubber connector per Section 305.09.

Saw cutting and hammer taps are prohibited.

All connections shall provide for a watertight seal between the pipe and the manhole. The connector shall be the sole element relied upon to assure a flexible water tight seal of the pipe to the manhole.

When connecting new pipe to existing manholes, a flow channel and bench walls shall be installed per Section 305.06.

403.09 Groundwater Monitoring Points

An air pressure test is required for all sanitary sewers. When performing the test, an adjustment to the starting air pressure is required to compensate for groundwater above the top of pipe.

The measurement of groundwater is optional. However, this Section provides a recommendation on the number of groundwater monitoring points and their locations.

If the Contractor chooses not to install the groundwater monitoring point(s), the air pressure adjustment shall be the maximum required per Section 602.03 (2.0 psi adjustment, starting air pressure 6.0 psi).

If groundwater monitoring points are installed as part of the project, then one (1) or more monitoring points shall be installed adjacent the manhole(s). The monitoring points may be a three (3) inch diameter PVC pipe, slotted at the bottom with a well screen, located adjacent to the manhole. The elevation of the bottom of the PVC pipe shall be at approximately the same elevation as the top of the highest adjacent sanitary sewer pipe.

The number of monitoring points shall be as follows:

1. If groundwater is not present during pipe installation, one (1) monitoring point is required.
2. If groundwater is present during pipe installation, the number of monitoring points shall be as follows:

Number of Manholes	Number of Monitoring Points
1 - 10	1
11 – 20	2
21 – 30	3
31 – 40	4
41 – 50	5
51 or More	6

The monitoring points shall be installed adjacent to selected manholes and spaced as evenly as possible throughout the project. The Contractor shall submit the locations to the RPR for approval.

If dewatering wells are used during construction to draw down the groundwater elevation, the site shall be considered to have groundwater present.

In both instances, one (1) of the monitoring points shall be installed at the furthest downstream manhole installed as part of the project unless directed otherwise by the RPR. If the development has more than one connection point to existing sewers, the manhole with the lowest invert elevation shall be selected.

SECTION 404
Trenchless Installation

404.01 Introduction

This Section provides the minimum requirements for the allowable trenchless methods for construction in the Indianapolis Sanitary District.

404.02 General Requirements

The following three trenchless methods, with their specific applications, are allowed:

1. Auger Boring and Pipe Jacking (Section 404.03) - All installations.
2. Horizontal Directional Drilling (Section 404.04) – Force main installations.
3. Pipe Bursting (Section 404.05) – Existing lateral rehabilitation.

The use of an alternate method for site specific conditions will be evaluated on a case-by-case basis. At a minimum, the alternate method will be reviewed through the variance process as contained in Section 102.12. At the discretion of the Department, the alternate method may be required to undergo a thorough evaluation by the Department's "New Products Committee" before any deviations will be considered. The applicant shall be responsible for all variance and product review fees.

404.03 Auger Boring and Pipe Jacking

The following are the minimum requirements when using boring and jacking installation methods.

1. General

   Boring and jacking will be allowed for the installation of force mains, gravity sanitary sewers, and laterals.

   The casing pipe or jacked pipe shall extend beyond a minimum of a 1:1 slope extending downward and outward from the edge of pavement plus four (4) feet on each end of the bore and jack alignment.

   The Engineer or Applicant shall be responsible for obtaining the necessary agency permits for boring and jacking under highways and railroads.

2. Specific requirements for Carrier, Casing, and Jacking pipes are as follows:

   a. Carrier Pipe

   Carrier pipe for insertion within casing pipe shall conform to the requirements of Chapter 300 of these Standards and the following requirements:

   i. Provisions shall be made to prevent over-homing of joints in all acceptable carrier pipe materials to prevent damage during insertion into the casing pipe. RCP, PCCP, and HDPE do not require such provisions;

   ii. All force main pipe shall have restrained joints.

   b. Casing Pipe

   Casing pipe for installation by jacking and augering shall be steel pipe per ASTM A 139 Grade B and shall have a smooth exterior wall. Additional requirements are as follows:

   i. Joints - Pipe joints shall be butt welded with a continuous circumferential weld.

   ii. Size - The inside diameter of the casing pipe shall be a minimum of six (6) inches greater than the largest outside diameter of the carrier pipe, bells, or fittings which are placed inside of the casing pipe.

   iii. Pipe wall thickness - Minimum pipe wall thicknesses are as follows:

Minimum Wall Thicknesses for Steel Casing Pipe

Casing Pipe		Highway Crossing	Railroad Crossing
Nominal Size, in.	Actual O.D., in.	Bare	Bare
8	8 5/8	0.250	0.250
10	10 3/4	0.250	0.250
12	12 3/4	0.250	0.250
14	14	0.281	0.250
16	16	0.281	0.281
18	18	0.312	0.312
20	20	0.312	0.344
24	24	0.312	0.375
30	30	0.375	0.469
36	36	0.469	0.532
42	42	0.500	0.625
48	48	0.500	0.688
54	54	0.500	0.781
60	60	0.563	0.844
66	66	0.625	0.938
72	72	0.688	1.000

NOTE: The Contractor shall conform to the requirements of agencies having jurisdiction over the work, such as INDOT or railroads, where such requirements are greater than those shown above.

   c. Jacking Pipe

   Jacking pipe shall be used in a one pass method where the jacked pipe acts as the carrier pipe.

   Only reinforced concrete pipe (RCP) and centrifugally cast fiberglass reinforced mortar pipe are acceptable for pipe jacking.

   RCP and centrifugally cast fiberglass reinforced mortar pipe for jacking shall meet the requirements of Chapter 300 of these Standards and the following:

   i. Size - Pipe shall be thirty-six (36) inches in diameter or larger;

   ii. RCP shall be Class III or greater and centrifugally cast fiberglass reinforced mortar pipe shall be specifically manufactured for jacking;

   iii. RCP and centrifugally cast fiberglass reinforced mortar pipe shall have a constant outside diameter (no bell or joint protrusions);

   iv. For RCP pipe, steel reinforcement shall be concentric with the pipe wall, and where required, additional reinforcement shall be provided at the ends of the pipe.

3. Auger Boring and Pipe Jacking Equipment and Construction

   The holes shall be bored from the low or downstream end, unless site conditions dictate otherwise.

   The Contractor shall provide boring equipment which is capable of advancing the bore hole within the required limits of accuracy and can be adjusted during installation to return to the planned alignment if deviations are discovered.

   Installations shall have a bored hole essentially the same diameter as the outside of the installed pipe. If voids develop or if the bored diameter is greater than the outside diameter of the pipe by more than one (1) inch, grouting shall be used to fill such voids.

   Provisions for removal of boulders or other large obstructions shall be included without retracting the casing pipe.

   When boring in loose, granular, or running soils, the cutting head shall be retracted inside the casing an adequate amount to prevent voiding. For crossings performed in granular materials under the water table, adequate dewatering shall be installed to lower the water table to below the invert of the casing.

   All cutting heads shall be removable without retracting the casing pipe.

   Following installation, the casing pipe shall be carefully inspected to ensure the carrier pipe can be properly placed.

   During placement of the carrier pipe in the casing, the carrier pipe shall be blocked or otherwise supported with casing pipe spacers or wood blocking to secure the proper flow line elevations throughout its full length and to ensure backfilling around the pipe can be done without any displacement or floating.

   The annular space between the carrier pipe and the casing pipe shall be completely filled with grout and/or cellular grout with minimum compression strength of 150 psi. Details on the material to be used to fill the void and the method of construction shall be submitted to the RPR.

4. Pipe Jacking Equipment and Construction

   Pipe jacking equipment shall meet all the requirements for boring equipment under No. 3 above.

   Excavation may be performed by handmilling or with the utilization of a tunnel boring machine (TBM).

   When utilizing RCP or centrifugally cast fiberglass reinforced mortar pipe, wood cushion rings or other resilient materials which do not affect joint integrity shall be placed between the joints and at the thrust rings to prevent point loading of the joints.

   The jacked pipe shall be constructed to prevent leakage of the pipe throughout its length.

   Soil, earth, and other material removal methods shall be installed, operated, and removed in such a manner that prevents damage to interior linings of jacked pipe. Auger removal of materials is not allowed on lined RCP or centrifugally cast fiberglass reinforced mortar pipe.

5. Unforeseen Obstructions

   If an obstruction stops progress of the pipe during installation, the installation method shall be modified to best suit the conditions encountered, except that line and grade may not be changed. Before proceeding, the Contractor shall notify the RPR in writing of the difficulty, diagnosis and proposed procedural modification. If the Contractor proposes abandonment of in-place piping and initiation of a new attempt at an alternate location, such a proposal will be considered only under the following conditions:

   a. The Contractor assures the RPR, in writing, that he will perform all proposed work in compliance with applicable laws, regulations, requirements of agencies having jurisdiction, and this Manual.

   b. In-place pipe shall be left in place and filled with grout with a minimum compression strength of 150 psi.

Note: The contractor may use ASCE, Manuals and Reports on Engineering Practice No. 106, "Horizontal Auger Boring Projects" as a reference.

404.04 Horizontal Directional Drilling (HDD)

The following are the minimum requirements when using the Horizontal Directional Drilling (HDD) installation method.

1. General

   HDD is only allowed for force main construction and only after a detailed review by the Department and Division of the specific pumping and force main design and installation conditions associated with the project. The Department's concerns are related to the potential for creating unknown high points in the force main as part of the directional drilling process, which may then accumulate air, and the sensitivity of centrifugal pumps to such air accumulations. To assure unknown high points are minimized, the minimum allowable slope for HDD installations is 1.5% per Section 502.15.

   All HDPE pipe shall be cut, fabricated, and installed in strict conformance with the pipe manufacturer's recommendations, or these Standards, whichever is more stringent. Joining, laying, and pulling of HDPE pipe shall be accomplished by personnel experienced in working with HDPE pipe. The pipe supplier shall certify in writing that the Contractor is qualified to join, lay, and pull the pipe.

2. Utility Locations

   All buried crossing or parallel utilities, including laterals, within ten (10) feet of the proposed alignment shall be accurately located and marked in plan and elevation. If sufficient information is not available from surface techniques, the Contractor shall excavate as required to establish with certainty the location of the utility.

3. Pipe Material

   Only smooth-walled HDPE pipe (minimum DR 11) is acceptable per Section 304.04.

   All piping system components shall be the products of one manufacturer and shall conform to this Manual and the following:

   a. Mechanical connections of the HDPE pipe to auxiliary equipment (pipe or structures) shall be through flanged connections which shall consist of the following:

   i. A polyethylene "stub end" shall be thermally butt-fused to the ends of the pipe.

   ii. Provide ASTM A 240, Type 304 stainless steel backing flange, 125-pound, ANSI B16.1 standard, and gaskets as required by the manufacturer.

   iii. Stainless Steel bolts and nuts of sufficient length to show a minimum of three complete threads when the joint is made and tightened to the manufacturer's standard.

   MJ Adapters may be used when joining HDPE pipe to pipe of other materials.

   b. Connections to manholes or other structures shall be restrained from movement by special fittings at each connection point specifically designed to prevent pullout, or extension into the structures as a result of thermal or other forces.

4. Drilling Fluid

   Bentonite, used in the drilling process, shall be environmentally safe.

5. Installation

   HDD shall consist of the drilling of a small diameter pilot bore from one end of the alignment to the other, followed by enlarging the hole diameter for the pipeline insertion. It is recommended the pipeline shall be assembled, supported, and pretested prior to installation in the directional drill tunnel. The Contractor shall be required to remove and reinstall the pipeline if the test fails after the inspection.

   The pipe shall be joined using the thermal butt fusion method per Section 304.04. The required piping shall be assembled in a manner that does not obstruct adjacent roadways or public activities.

   Prior to commencement of drilling operations, drill path shall be surveyed for any surface geo-magnetic variations or anomalies.

   Directional drilling machines shall consist of a hydraulically powered system to rotate and push hollow drilling pipe into the ground at a variable angle while delivering a pressurized fluid mixture to a guidable drill (bore) head. The drill pipe shall be a diameter sufficient for the torque and longitudinal loads and fluid capacities required for the work.

   A smoothly drilled pilot bore shall follow the design centerline of the pipe profile and alignment described on the construction drawings. The X, Y and Z axis locations relative to the planned alignment and planned elevations shall be monitored along the course of the pilot bore. An electronic guidance system capable of continuously monitoring the location of the drilling head and providing a readout of the inclination and azimuth on the drilling head to an accuracy of 1% incline and 1° bearing shall be available and utilized. The indicated pipe elevation from location readings shall be accurate to within 2% of the depth vertically at all depths up to fifty (50) feet in any soil condition including hard rock. Pipe elevation may not be based on the depth below the indicated surface grade on the profile drawings but shall be shown based on surveyed USGS elevations.

   The position shall be determined a minimum of once every twenty (20) feet by personnel trained and experienced with electronic guidance systems. All data and readouts pertaining to the position of the bore head and the fluid pressures and flows shall be accessible to the Department, Division and the RPR at all times. The pilot bore location shall be compared to the designed location to determine the deviation. This information shall be submitted to the RPR for approval prior to pipe installation. Refer to Section 404.04.9, Testing and Inspection, for guidelines on acceptable deviations.

   Reaming operations shall be conducted to enlarge the pilot after acceptance of the pilot bore location. The number and size of such reaming operations shall be conducted as the operation dictates but in no case shall the size of the reaming operations result in a hole greater than 150% of the O.D. of the installed pipe. Note: For crossings under INDOT right-of-way, INDOT Specification Section 716 where this method is limited to a maximum reamer size of twenty-four (24) inches unless otherwise approved by INDOT.

   The maximum allowable pull exerted on the HDPE pipelines shall be measured continuously and limited to 75% of the maximum allowed by the pipe manufacturer so the pipe or joints are not over stressed. If necessary, the pipelines shall be adequately supported by rollers, skids, slings, or other low friction devices to prevent over stressing, over bending, excessive tensile forces, or buckling during the pullback operation. The method of pipe support shall be part of the Installation Plan which shall be made available to the RPR or Department upon request.

   The HDPE pipe shall at all times be handled in a manner that does not over stress the pipe. Vertical and horizontal curves shall be limited so that wall stresses do not exceed 50% of yield stress for flexural bending of the HDPE pipe. If the pipe is buckled or otherwise damaged, the damaged section shall be removed and replaced. Appropriate steps shall be taken during pullback to ensure that the HDPE pipe will be installed without damage.

   When adjacent sections of directionally drilled pipe are to be connected together, the Contractor shall excavate a sufficiently large area at the planned grade to assure the adjoining sections of pipe can be installed without sags or humps. Joining of the pipe shall be performed utilizing butt fused mechanical joint fittings or electrofusion couplings.

6. Locating (Tracer) Wire

   All lines installed by HDD shall be provided with a minimum two (2) continuous type TW insulated #8 solid copper tracer wires. The wire shall be installed along the pipe, fastened securely to the pipe at five (5) foot intervals, and terminated above ground with the lead taped around each structure.

   The wire shall be brought up to ground level every four hundred (400) feet through a vinyl coated aluminum riser pipe with cap and/or at all line valve boxes. The tracer wires shall be connected using DBR Direct Burial Splice Kit manufactured by 3M Electrical Products Division, Austin, TX or equal. The riser pipe and cap shall not be placed in areas subject to vehicular traffic.

   The tracer wire shall be capable of, and demonstrated to have, continuous transmission of tracing signal along the full length of the installed pipe.

7. Environmental Provisions

   The Contractor shall be responsible for additional environmental provisions associated with the HDD operation beyond those covered by Section 405.03. The HDD operation is to be operated in a manner to prevent the discharge of water, drilling mud, and cuttings to adjacent creeks or land areas involved during the construction process. Equipment and procedures to maximize the recirculation or reuse of drilling mud to minimize waste may be provided. All excavated pits used in the drilling operation shall be constructed to completely contain the drill fluid and prevent its escape to waterways and/or groundwater.

   The Contractor shall be responsible for submitting to the RPR the proposed plan for erosion control/environmental protection. At a minimum the Contractor shall have on site in sufficient quantity equipment (graders, shovels, etc.) and materials (such as groundsheets, hay bales, booms, and absorbent pads) for cleanup and contingencies for use in the event of inadvertent leaks, seeps or spills. Waste drilling mud and cuttings shall be disposed by the Contractor to an approved offsite location.

8. Pipe Relaxation

   After the pipe has been installed, allow pipe manufacturer's recommended amount of time, but not less than four (4) hours, for cooling and relaxation due to tensile stressing prior to hydrostatic testing.

9. Testing and Inspection

   The pipe is ONLY required to be hydrostatically tested one (1) time, after the complete installation.

   However, to identify any defects prior to installation, the Department recommends the pipe be hydrostatically tested a total of three (3) times: after joining into continuous pullback sections prior to installation, after installation of each pullback section, and again when all the pullback sections are joined together end-to-end. Hydrostatic testing shall be performed in accordance with Section 603. Any material not passing the hydrostatic testing shall be replaced.

   A horizontal tolerance of up to three (3) feet left or right of the planned alignment will be permitted at any point on the alignment provided the pipeline is still within the easement or right-of-way where it was planned.

   Tolerances for vertical alignment compared to planned alignment will be judged on a case-by-case basis depending on the location relative to surrounding utilities, creation of new high or low points, required relocation of air/vacuum valves, and the effect on the pumping system curves.

   There shall be no allowance for length. The alignment of each pilot bore must be approved by the RPR before pipe can be pulled. If the pilot bore fails to conform to the above tolerances, the RPR may require a new pilot boring to be made.

404.05 Pipe Bursting (Lateral Rehabilitation Only)

Pipe bursting shall only be used for lateral rehabilitation/replacement and shall conform to the latest editions of the UPC (IAPMO IS 26-2003) and the following requirements.

1. General

   The Contractor shall be certified by the particular pipe-bursting system manufacturer and personnel shall be certified as fusion technicians by a manufacturer of HDPE pipe. Certifications shall be submitted with the lateral application.

   The Contractor shall perform a pre-construction Closed Circuit Television (CCTV) inspection to evaluate the condition of the existing pipe and determine whether the pipe-bursting method is a valid alternative for repair. Inspection video shall be made available to the Division or Department upon request.

2. Materials

   Only HDPE and butt fusion joints per Section 303.02 or 304.04 shall be used for lateral pipe bursting applications.

3. Construction – General

   At a minimum, the Contractor shall adhere to the following requirements during construction:

   a. Defects and Obstructions

   Contractor shall perform all necessary point repairs and remove all obstructions when pre-construction CCTV inspection reveal heavy solids, offset joints, sags in the pipe, or collapsed pipe that will prevent the completion of the pipe bursting process.

   If preconstruction CCTV inspection reveals a sag in the lateral that is greater than one half (1/2) the diameter of the existing pipe, Contractor shall excavate and replace those sections of pipe to result in acceptable grade without the sag.

   b. Utility Location and Required Clearances

   A minimum of one foot of clearance (vertical or horizontal) from the outside edge of the lateral to the outside edge of the utility pipe, wire or structure is required. Contractor shall confirm this clearance exists based on above-ground evidence including utility location marks or as-built drawings.

   Due to the hazards associated with pipe-bursting near natural gas lines, all natural gas lines, including but not limited to distribution mains, transmission mains, and service lines, marked within four (4) feet of the existing lateral shall be uncovered (pot-holed) to confirm the required clearance exists. If the existing gas line is installed parallel and within four (4) feet horizontally to the existing lateral, the gas line shall be uncovered a minimum of once every one hundred (100) feet along the length of the lateral.

   c. Pipe Relaxation

   After the pipe has been installed, allow pipe manufacturer's recommended amount of time, but not less than four (4) hours, for cooling and relaxation due to tensile stressing prior to reconnecting to the lateral or sewer.

   d. Reconnections to Existing Laterals

   Connections to existing laterals shall be made with a watertight non-shear coupling such as manufactured by Mission, Fernco, or approved equal.

   e. Bedding and Backfill Requirements

   Bedding and backfill for all point repairs or connections to the existing lateral shall be per Section 401.06.

4. Post-Construction CCTV Inspection

   Contractor shall perform a post-construction CCTV inspection to verify the repair was successful and acceptable. Contractor shall repair any sections of pipe that do not meet the requirements of this Section. The inspection video shall be made available to the Division or Department upon request.

SECTION 405
Erosion Control, Site Restoration, and Safety

405.01 Introduction

This Section provides the minimum erosion control requirements, site restoration requirements, and safety guidelines for the construction of all sanitary sewer facilities.

This Section is not intended to replace any applicable safety requirements such as, but not limited, to OSHA requirements.

405.02 General Requirements

The Contractor and Owner are responsible for ensuring safe working conditions and safety procedures are being followed at the work site.

The City, or any authorized representative of the City, is NOT responsible for policing the Contractor's safety program.

A Stop Work order may be issued per Section 102.11 of this Manual if work is, in the opinion of the Division, Department, or RPR, proceeding in an unsafe manner.

405.03 Erosion Control

Erosion control requirements shall be per the latest edition of "Chapter 600 Erosion and Sediment Control" of the City of Indianapolis Stormwater Specifications Manual or the City of Westfield Construction Standards and Specifications. .

405.04 Site Restoration

Site restoration for all disturbed areas within the project shall be as follows:

1. For off-site areas

   a. All areas shall be restored to the original or better condition.

   b. Paved areas within the public right-of-way shall be restored per the latest revision of the Department of Metropolitan Development's "Regulations of Cuts Within the Public Right-of-Way" and the City of Westfield Construction Standards and Specifications or other applicable requirements

2. For on-site areas

   The area shall be restored per approved construction plans.

405.05 Final Cleanup

When construction is complete, the Contractor shall remove all surplus material, trash, and debris from the site.

Contractor shall be responsible for repairs of all unsatisfactory work.

405.06 Traffic Control

The Contractor shall maintain vehicular and pedestrian traffic during all operations as required by all the permits issued by the Division. It is the responsibility of the Contractor to apply for and obtain all necessary permits.

Protection of vehicular and pedestrian traffic shall be the sole responsibility of the Contractor.

The Contractor shall comply with the latest edition of the "Indiana Manual on Uniform Traffic Control Devices for Streets and Highways" during work operations and for the duration of the project.

405.07 Trench Safety Systems

The Contractor shall be responsible for the design, installation, and maintenance, of any required trench safety system in compliance with OSHA Part 1926, of the Code of Federal Regulations, and all other applicable Federal, State, and Local regulations and requirements.

CHAPTER 500

LIFT STATIONS AND LOW PRESSURE SYSTEMS

SECTION 501
Requirements Common to both Lift Stations and Low Pressure Systems

501.01 Introduction

This Section provides the planning, design, and submittal requirements common to both lift stations and low pressure sewer systems.

For requirements specific to lift stations refer to Section 502 and 503.

For requirements specific to low pressure sewer systems refer to Section 504.

501.02 General

When possible, gravity sewers shall be extended to the proposed development. Lift Stations will be allowed if ALL the following conditions are met:

1. The proposed lift station or low pressure system is justified per Section 501.03;
2. The force main is designed per Section 502.15; and
3. Existing Service Area boundaries are not crossed.

   Sanitary Sewer Service Area boundaries shall not be crossed to avoid extending gravity sanitary sewers.

When an existing lift station requires a capacity upgrade for a proposed development, the entire lift station system will be evaluated to determine the necessary upgrades. The requirements shall be determined on a case-by-case basis and shall be at the discretion of the Department. The intent is to upgrade the existing lift station to the Standards set forth in this Manual.

501.03 Justification

Lift stations and low pressure systems shall be justified and will only be approved if the installation of a gravity sanitary sewer alternative exceeds the 50-year life cycle cost for the proposed system AND the criteria in Section 501.02 are met.

An accurate cost estimate to construct a gravity sanitary sewer alternative and a 50-year life cycle cost estimate for the proposed lift station shall be submitted prior to Approval.

The Department, at its sole discretion, may choose to estimate the 50-year life cycle cost for the proposed lift station.

SECTION 502
Lift Station Design

502.01 Introduction

This Section provides the planning, design, and submittal requirements for lift stations with pumping capacities of 1,000 gpm or less.

Requirements for lift stations with capacities greater than 1,000 gpm will be determined by the Department on a case-by-case basis.

502.02 General

Due to the variability of site conditions, each site and proposed lift station will be evaluated on a case-by-case basis. If deemed necessary, the Department may make additional requirements not covered in this Manual.

To avoid unnecessary delays in the Permitting process, a pre-submittal meeting with the Division and Department during the planning stages of the project is recommended.

502.03 Submittal Requirements for Approval and Construction Permit

When submitting for an Approval and a Construction Permit, the following are required:

1. Lift Station Service Area – Per Section 502.04
2. Lift Station Justification – Per Section 501.03.
   a. 50-year life cycle analysis.
   b. Gravity sewer alternative cost estimate.
3. Lift Station Calculations
   a. Pumping Capacity – Per Section 502.07.
   b. Total Dynamic Head (TDH) Calculations – Per Section 502.09
   c. Pump and System Head Curves – Per Section 502.10.
4. Standard Lift Station Details

   The most recent version of the Standard Lift Station Detail Sheets, as furnished by the Department, shall be submitted for lift stations.
5. Pre-Construction Submittal Requirements - Per Section 503.04.
6. Any other information the Division and/or Department deems necessary to review and evaluate the proposed pumping system.

502.04 Lift Station Service Area

The Applicant shall prepare a Lift Station Service Area Study in accordance with all the requirements in Section 202.03.

In addition to the requirements of Section 202.03, if it determined an existing lift station can be abandoned and connected to the proposed sanitary sewer system, the area served by the existing lift station shall be included in the proposed Lift Station Service Area.

502.05 Lift Station Location

Lift station locations will be evaluated by the Department on a case-by-case basis. At a minimum, the lift station shall be located to assure the following:

1. SCADA Connectivity.

   The lift station shall be located within the proposed development to assure connectivity to the ISD's SCADA wireless monitoring and control network.

   Connectivity shall be verified prior to Approval.

   To verify connectivity, the location of the lift station shall staked by the Engineer. Connectivity will be verified by a radio path test done by the Department, or a representative of the Department, and paid for by the Applicant. If the location does not provide adequate connectivity, an alternate location shall be chosen.

   To assure future connectivity, the development shall be configured in such a way to provide for a thirty (30) feet wide by seven hundred (700) feet long "clear zone" between the antenna at the lift station and the designated receiving radio tower. The clear zone is not required to be extended onto adjacent properties. However, if site conditions allow, the Department may require an alternate location for the proposed lift station to have the entire clear zone, or as much as practical, located within the project boundaries.

   If possible, the clear zone shall be located in obstruction-free areas that cannot be built upon such as, but not limited to, right-of-ways, easements, common areas, flood hazard areas, or detention areas.

   If any of the above conditions cannot be met, the Department will evaluate alternatives, including building height restrictions, on a case-by-case basis.

   The clear zone shall be shown on the plans.

2. Adequate Access

   The lift station shall be located to assure adequate access is available for operation and maintenance activities. Clearance requirements are as follows:

   a. Concrete Pad

   i. To adjacent property lines – twenty (20) feet minimum;

   ii. To public right-of-way – thirty (30) feet maximum;

   iii. To private paved streets or paved areas – twenty (20) feet minimum and thirty (30) feet maximum; and

   iv. To structures or buildings – thirty (30) feet minimum.

   b. Access Drive

   To adjacent property lines – ten (10) feet minimum.

   Lift stations shall not be located in areas the Department determines to be inaccessible such as, but not limited to, rear yards.

502.06 Lift Station Type

Only submersible duplex lift stations will be allowed.

The configuration shall be per the Department's most recent version of the Standard Lift Station Detail Sheets.

502.07 Pumping Capacity

The pumping capacity shall be calculated as follows:

$$Q = \textbf{Design Flow} / 1440$$

where:

Q = Pumping rate, gpm

Design Flow = Flow as determined per Section 202.04, gpd

1440 = Conversion from gpd to gpm

Each pump in a duplex station shall have a pumping capacity of Q. The second pump shall act as a backup in the event one (1) pump is out-of-service.

Q shall be rounded up in increments of 10 gpm (i.e. 233 gpm shall be rounded up to 240 gpm).

The Department may require the pumping capacity to be increased or decreased, if deemed necessary.

The minimum pumping capacity shall be 100 gpm.

502.08 Initial Pumping Capacity

Because proposed developments may only be a portion of the overall Lift Station Service Area, the Department may allow or require the pumping capacity to be reduced for the proposed development if the following conditions are met:

1. The area of the proposed development is less than 50% of the Lift Station Service Area.
2. The required Pumping Capacity for the proposed development is less than 50% of the required Pumping Capacity for the Lift Station Service Area.

At a minimum, each pump shall be sized to accommodate the Design Flow of the proposed development plus 20%.

Meeting the above criteria does not guarantee a reduction will be allowed.

The specific equipment requirements and allowable reductions will be at the discretion of the Department and will be evaluated on a case-by-case basis. Only the pumps, motors, and relevant control panel equipment will be considered for allowable reductions. The wet well, valve and meter vaults, piping, valves, and force main shall be sized for the overall Lift Station Service Area.

502.09 Total Dynamic Head Calculations

The Total Dynamic Head (TDH) shall be calculated for the pumping capacity of the lift station.

The TDH is the sum of the static head and friction losses for a given pumping rate in a defined pumping system. TDH shall be calculated as follows:

$$TDH = \textbf{Static Head} + h_f + h_m$$

where:

TDH = Total Dynamic Head, feet

Static Head = Elevation difference between the force main discharge elevation and the pump off elevation, feet

10505 N. College Avenue
Indianapolis, Indiana 46280
weihe.net

317 | 846 - 6611
800 | 452 - 6408
317 | 843 - 0546 *fax*

ALLAN H. WEIHE, P.E., L.S. - FOUNDER

WEIHE ENGINEERS
Land Surveying | Civil Engineering
Landscape Architecture

PROJECT NO.: W15.0316
DWG NAME: w150316-C904 SS spec.dwg
DESIGNED BY: RLW
DRAWN BY: RLW
CHECKED BY: BJS
DATE: 01.29.2016

REVISIONS AND ISSUES	DATE	BY
SUBMITTED FOR COUNTY SURVEYOR REVIEW	10.16.2015	BJS
ISSUED FOR TAC REVIEW	01.29.2016	BJS

STEVEN SCOTT RUCKER REGISTERED PE11300279 STATE OF INDIANA PROFESSIONAL ENGINEER

NOT FOR CONSTRUCTION – APPROVAL PENDING

STEVEN SCOTT RUCKER P.E. 11300279

PREPARED FOR: Culver's of WESTFIELD
17651 SUN PARK DRIVE, WESTFIELD, IN 46074

CITIZENS - SANITARY SEWER SPECIFICATIONS
Part of SW/4, Section 36, Township 19 North, Range 3 East, Washington Township, Hamilton County, Indiana

SHEET NO. C906

PROJECT NO. W15.0316

LOCATION: H:\2015\w150316\Engineering\design\conset\w150316-C904 SS spec.dwg
LAYOUT: C906
DATE/TIME: January 28, 2016 - 2:47pm
PLOTTED BY: schoeffb

h_f = Piping friction losses, feet

h_m = Minor losses, feet

The above variables shall be calculated as follows:

1. Static Head, feet

Static Head = Force Main Discharge Elevation – Pump Off Elevation

When the high point in a force main is not at the discharge elevation, the elevation of the high point shall be evaluated to determine if the pump performance characteristics are adversely affected.

2. h_f = Piping friction losses, feet

Piping friction losses shall be calculated as follows:

$$h_f = 10.44\ L \frac{Q^{1.85}}{C^{1.85}\ D^{4.8655}}$$

where:

D = pipe diameter, inches

Q = pumping rate, gpm

C = pipe roughness coefficient (100, 120, & 140)*

L = force main length, feet

* A roughness coefficient of C = 120 shall be use to determine the Operating Point. However, due to changing force main conditions over time, the TDH shall also be calculated using C = 100 at the Pump Off elevation and C = 140 at the Pump On elevation. See Section 502.10 for Pump Selection Criteria and further explanation.

3. h_m = Minor losses, feet

Minor losses are due to pipe fittings and shall be calculated as follows:

$$h_m = \frac{KV^2}{2g}$$

where:

K = proportionality constant**

V = velocity, ft/sec

g = gravitation constant = 32.2 ft/sec^2

** The proportionality constant, K, is dependent on the type of fitting. Unless justified, K, shall be as follows:

Fitting	K
Check Valve	2.5
Plug Valve	1.5
Tee	0.9
90° Elbow	0.3
45° Elbow	0.2

Alternate methods to determine minor losses, such as using Equivalent Lengths, may be allowed on a case-by-case basis with prior approval from the Department.

502.10 Pump Selection

The Pumping Capacity and TDH, as calculated in Sections 502.07 and 502.09, shall be used as the Operating Point when selecting the pump make and model.

Per Section 502.09, a roughness coefficient of C = 120 was used to determine the Operating Point. However, each pump shall be within the pumps operating range when C = 100 at the Pump Off elevation and C = 140 at the Pump On elevation. The pump, motor, and impeller shall be non-overloading throughout the entire operating range for all roughness coefficients.

The system head curves for each roughness coefficient shall be plotted on the pump performance curve to determine the operating characteristics.

Engineering judgment may be used when evaluating pump alternatives. If justified, the Department may require a different operating point or an alternate pump to be used.

502.11 Variable Speed Pumping Systems

The need for variable speed pumping systems will be evaluated on a case-by-case basis and shall be at the discretion of the Department.

Variable Speed Pumping systems may be required if ANY of the following conditions are met:

1. Horsepower – Greater than sixty (60) hp;
2. TDH – Greater than fifty (50) feet;
3. Pump Capacity – Greater than 500 gpm;
4. Hydraulic Transients (water hammer) – When the potential for damaging transients exist;
5. Buildout conditions – If the design flow as determined in Section 202.03 justifies, and
6. Others – If pump system conditions justify

Lift stations with constant speed pumping systems shall be designated as "Level 3" Lift Stations and those with variable speed pumping systems shall be designated as a "Level 2" Lift Stations.

Constant speed control system requirements for Level 3 Lift Stations shall be per Section 503.08.

Variable speed control system requirements for Level 2 Lift Stations shall be per Section 503.09.

502.12 Wet Well Sizing

The wet well shall be sized for the entire Lift Station Service Area.

The minimum size of the wet well shall be as follows:

1. Diameter of Wet Well

The minimum wet well diameter shall be six (6) feet.

2. Depth of Wet Well, below the invert of the incoming sewer

The minimum required depth of the wet well below the invert of the incoming sewer shall be calculated as follows:

Depth = 1.5 feet + Operating Depth + Height of pump

where:

1.5 feet = Difference between the lowest incoming gravity sewer invert and the lead pump on elevation.

Height of Pump = Distance from the bottom of the wet well to the top of the pump, feet.

Operating Depth = Depth between the lead pump on and pump off elevations, feet.

The operating depth is a function of the volume and diameter.

The volume shall be based on four (4) starts per hour and shall be calculated as follows:

$$V = \frac{tQ}{4}$$

where:

V = Volume, gallons

t = 15 minutes (15 minute station cycle time)

Q = Pumping rate per 502.07, gpm.

The minimum Operating Depth shall be 2.5 feet.

Only one (1) incoming sewer connection is allowed per Section 502.17.

When Variable Speed Pumps are required per Section 502.11, the Department may consider or require a reduction of the volume.

Both pumps shall remain fully submerged at all times during the full pumping cycle.

3. Detention Time

The maximum detention time (pump off time) shall be thirty (30) minutes based on the average daily flow.

There may be some situations when one or more of the above wet well sizing criteria cannot be met. The Department will evaluate those instances on a case-by-case basis.

Note: If noticeable odors are being generated at any time before the Maintenance Bond expires, the Applicant shall determine the cause and construct an odor control facility at either the wet well or the discharge end of the force main. The method used for odor control will be approved by the Department on a case-by-case basis.

502.13 Operating Set Points

The elevation of the set points for the operation of the lift station shall be as follows:

1. Primary level sensor - Pressure Transducer (Per Section 503.08 or 503.09)
   a. Alarm Level = 0.5 feet below the lowest incoming invert;
   b. Lag Pump On = 1.0 feet below the lowest incoming invert;
   c. Lead Pump On = 1.5 feet below the lowest incoming invert;
   d. Pump Off = (Lead Pump On Elev. – Operating Depth per Section 502.12.)
2. Backup (Alarm) level sensors - Ball Floats (Per Section 503.08 or 503.09)
   a. Pump On = (Lowest incoming pipe invert + 1/2 diameter of pipe.)
   b. Pump Off = 0.5 feet below the lowest incoming pipe invert.

502.14 Valve and Meter Vaults

The minimum vault dimensions for Level 2 and Level 3 lift stations shall be per the most recent version of the Standard Lift Station Detail Sheets.

502.15 Force Main Design

The force main shall be designed as follows:

1. Lift stations shall not pump downhill.

Prior to discharging into the receiving manhole, the force main shall not flow downhill. When possible, the receiving gravity sewer shall be extended a sufficient distance to avoid downhill pumping.

The discharge elevation of the force main at the discharge location shall not be below the elevation in the valve vault and greater than two (2) feet above the invert of the incoming sewer.

2. The size, depth, slope, and location shall be as follows:

a. Size

The diameter shall be sized using the Pumping Capacity as determined in Section 502.07 with the following velocities:

i. Minimum Velocity – 2.5 ft/sec

ii. Maximum Velocity – 6.0 ft/sec

Higher velocities will be considered and evaluated on a case-by-case basis.

If the Pumping Capacity is reduced per Section 502.08, the minimum velocity may be reduced to 2.0 ft/sec when using the Initial Pumping Capacity.

The minimum diameter force main shall be 4 inches.

b. Depth

The minimum depth to the top of the pipe shall be 4.5 feet.

The depth may be required to be increased if air release valves can be avoided or the minimum slope cannot be achieved.

c. Slope

The minimum slope for force mains is determined by the installation method and shall be as follows:

i. Open Cut Installation – Greater than 0%

The force main shall not be designed on a flat slope (0%).

ii. Horizontal Directional Drilling (HDD) – Minimum 1.5%

The Division or Department may limit the length installed with HDD or require open cut installation if the number of air release valves can be reduced.

d. Location

Existing and proposed force mains shall be located per Section 202.07.1 & 2.

3. Air Release / Vacuum Relief Valves

When possible, force mains shall be designed to avoid the need for air release or vacuum relief valves.

When high points cannot be avoided, A.R.I. D-020, stainless steel air release valves shall be installed per the most recent version of the Standard Lift Station Detail Sheets and at each high point where air could become trapped.

4. Force Main Anchorage

Force mains shall be anchored to resist thrusts at all bends, angles, tees, etc. in the force main pipe. The required anchorage shall be achieved by installing restrained pipe joints and concrete thrust blocks or anchor blocks as designed by the Engineer, and shown on the plans.

Restrained joints shall be per Section 304.

The Engineer shall determine the number of joints and/or length of pipe to be restrained on each side of all bends. The number of restrained joints or length of pipe shall be shown on the plans.

5. Connections to force mains are prohibited, except for connections to common force mains in Low Pressure Systems.

502.16 Buoyancy

The wet well shall be designed to prevent "floating" by assuring:

Opposing Forces > Buoyancy Forces

where

Opposing Forces = Weight resisting buoyancy forces (lbs).

Buoyancy Forces = Uplifting forces due to groundwater (lbs).

The groundwater elevation shall be assumed to be at the surface elevation immediately adjacent the base slab.

502.17 Connections to the Wet Well

For proposed lift stations, only one (1) incoming connection to the wet well will be allowed. The connection shall be of sufficient depth to provide service to the entire Lift Station Service Area.

SECTION 503
Lift Station Equipment and Operating Requirements

503.01 Introduction

This Section provides the equipment and operating requirements for lift stations.

503.02 General

Lift station equipment meeting or exceeding the requirements set herein will be approved. However, the Department may modify any of the requirements in this Section, if justified.

All components of the lift station exposed to weather shall be constructed of material that is resistant to corrosion and will not require surface protection throughout the expected life of the lift station. In general, these materials are stainless steel, aluminum, fiberglass reinforced polyester (FRP), and ultraviolet stabilized PVC.

503.03 Equipment Vendors

All equipment shall be an integral package supplied by the pump manufacturer with local representation so as to provide undivided responsibility.

503.04 Submittal Requirements: Pre-Construction

Prior to construction, the Contractor shall submit the following:

1. A cover letter from the Engineer and Contractor indicating all proposed equipment and components meet the requirements of this Manual and the approved Plans.
2. Four (4) sets of shop drawings, detailed specifications, pump warranty, and performance characteristics for all equipment and components to be furnished and installed.

503.05 Power Requirements

Only electric-utility-delivered 3-phase, 60 Hz, 4-wire wye, or delta power will be allowed.

The use of phase converters to derive 3-phase power from 1-phase power is prohibited.

503.06 Pump Equipment

Pumps shall be either Hydromatic, Flygt, KSB or Barnes pumps. Westfield shall be either Flygt, or Barnes.

Pump Equipment shall be as follows:

1. Pumps

Pumps shall be of the submersible type for handling raw unscreened sewage. Pump volute, motor, and seal housing shall be high quality gray cast iron. Impeller shall be either cast iron or cast bronze of a non-clog design capable of handling minimum three (3) inch sphere solids, fibrous material, heavy sludge, and other matter found in normal sewage applications. Impeller shall have pump out vanes on the back shroud of the impeller to keep pumped material away from the seal area and increase operating life. Impeller shall be either slip fit or taper fit with key to securely lock the impeller to the driving shaft. The pump volute shall be fit with a replaceable bronze wear ring to minimize wear on the impeller and help achieve longer balance operating life. All fasteners shall be of stainless steel.

2. Mating Surfaces

All mating surfaces where watertight sealing is required shall be machined and fitted with nitrile rubber O-rings. Sealing shall be accomplished when metal-to-metal contact is made, resulting in controlled compression of the rubber O-rings without requirement of a specific torque limit.

3. Seal System

The pump shall be provided with a mechanical rotating shaft seal system running in an oil reservoir having separate, constantly lubricated lapped seal faces. The lower seal unit between the pump and oil chamber shall consist of one (1) stationary seat and one (1) rotating ring held in place by its own spring. The lower seal shall be removable without disassembling the seal chamber. The upper seal between the motor and the seal chamber shall be of the same design with its own separate spring system. The seals shall require neither maintenance nor adjustment, but shall be easily inspected and replaceable. Shaft seals with conventional double seal utilizing a single spring between the two (2) seals and requiring a pressure differential to offset external pressure shall not be considered acceptable nor equal to the dual independent seal system specified. The shaft sealing system shall be capable of operating submerged to pressures equivalent to two hundred (200) feet. No seal damage shall result from operating the pump unit out of its liquid environment. The seal system shall not rely upon the pumped media for lubrication.

The seal chamber shall also be equipped with a seal failure sensor probe which will sense water intrusion through the lower seal. This sensor shall be connected to an alarm in the control panel to indicate lower seal failure.

4. Housing

The stator winding, rotor and bearings shall be mounted in sealed submersible type housing. Insulation utilized in the stator windings shall be Class H with maximum temperature capability of 180° C. Motor housing shall be filled with a high dielectric oil to give superior heat transfer and allow the bearing to run in a clean, well lubricated environment; or the housing shall be air filled with grease lubricated bearings. The pump and motor are to be specifically designed so that they may be operated partially or completely submerged in the liquid being pumped. The pump shall not require cooling water jackets. Stator shall be securely held in place with a removable end ring and threaded fasteners so that it may be easily removed in the field without use of heat or press. Shaft shall be stainless steel and supported by ball bearings. Motor shall be provided with heat sensing units attached to the motor windings which shall be connected to the control panel to shut down pump if overheating occurs.

5. Cables

Pump motor cable and heat sensor/seal failure sensor cable shall be suitable for submersible pump applications and this shall be indicated by a code or legend permanently embossed on the cable. Cable sizing shall conform to NEC specifications for pump motors and shall be of adequate size to allow motor voltage conversion without replacing the cable. Cable of the proper length shall be provided to eliminate need for splices or junction boxes between pump and "control center." The cable shall enter the motor through a cord cap assembly which is double sealed allowing disassembly and disconnect of the wires and the motor and still not damage the sealed characteristics of the motor housing. Each individual conductor shall be color coded in accordance with generally accepted industry standards. The color coding shall designate the application of the conductor.

6. Mounting Base

The pump mounting base shall include adjustable guide rail supports and a discharge connection with a one hundred twenty-five (125) pound standard flange. The base and the discharge piping shall be permanently mounted in place. The base plates shall be anchored in place utilizing epoxy type anchors with stainless steel studs and nuts as manufactured by HILTI Fasteners, Inc. or equal.

7. Guide Rails

A rail system shall be provided for easy removal of the pump and motor assembly for inspection and service. The system shall not require a man to enter the wet well to remove the pump and motor assembly. Two (2) rails of two (2) inch stainless steel pipe for Flygt pumps or one rail of fiberglass reinforced plastic (FRP) I-Beam for Hydromatic pumps shall be provided for each pump unless the size of the pump dictates otherwise. The guide rails shall be positioned and supported by the pump mounting base. The guide rails shall be aligned vertically and supported at the top by attachment to the access hatch frame. One (1) intermediate guide rail support shall be required for each nine (9) feet of guide rail length for FRP and fifteen (15) feet for stainless steel pipe. All mounting equipment shall be stainless steel.

8. Rail Guide and Lifting Chain

The pumps shall be equipped with sliding brackets or rail guides. To insure easy removal of the pumps, the rail guides attached to each pump shall not encircle the rails. A stainless steel lifting chain of adequate length for the basin depth shall be provided for each pump. Each pump shall be equipped with a permanent, stationary lifting handle with a minimum clearance of twelve (12) inches between the top of the pump and bottom of the handle.

The rails and the rail guide shall function to allow the complete weight of the pumping unit to be lifted on dead center without binding and stressing the pump housing. The rail system shall function to automatically align the pumping unit to the discharge connection by a simple downward movement of the pump. No twisting or angle approach will be considered acceptable. The actual sealing of the discharge interface may be of the hydraulically sealing diaphragm type assembly with removable Buna-N diaphragm as supplied by Hydromatic Pump or may be of the metal-to-metal contact as provided by Flygt Pump.

9. Warranty

Pump warranty shall be provided by the pump manufacturer and shall warrant the units being supplied to the Owner and City against defects in workmanship and materials for a period of five (5) years under normal use, operation and service. The warranty shall be in printed form and apply to all similar units. A copy of the warranty statement shall be submitted with the approval drawings.

503.07 Lift Station Components

The lift station shall be configured and shall include all components shown on the most recent version of the Standard Details Lift Station Details Sheets and the following:

1. Wet Well, Valve and Meter Pits, Flat Top, and Base Slab

a. Material

The wet well, valve and meter vaults, flat tops and base slabs shall be constructed of precast concrete meeting the requirements of ASTM C 478. Cast-in-place monolithic structures may be substituted with the prior written approval from the Department.

b. Joints

All joints between precast sections shall be per Section 305.02.

c. Waterproofing

The outside wall below grade shall be coated with bituminous waterproofing material.

2. Concrete Pad

The wet well and valve and meter vaults shall be enclosed at grade level with a minimum eight (8) inch thick reinforced concrete pad rectangular in shape.

3. Access Drive

The Lift Station shall be provided with a minimum eight (8) inch thick by fifteen (15) feet wide reinforced concrete access drive conforming to the latest DOT Standards for Design of Driveways.

4. Access Hatches and Frames

a. An aluminum two (2) door access hatch frame and door assembly shall be installed in the concrete top for the wet well. This door assembly shall provide access for removal of the pumps and shall support the guide rails. The doors shall be provided with a lifting handle, safety latch to hold the door in the open position, and a hasp suitable for a padlock. The doors shall have a non-skid finish and be designed with a minimum 300 psi, live loading.

Westfield covers shall have diamond pattern.

b. Valve and Meter Vaults

An aluminum single door access hatch frame and door assembly similar to the one described above for the wet well shall be installed in the concrete top for the valve and meter vaults. Minimum opening shall be thirty-six (36) inches by thirty-six (36) inches.

5. Check and Shutoff Valves

A swing check valve with a weight operated external swing arm and an eccentric plug valve shall be installed in the valve vault on each pump's discharge piping. A minimum clearance of twelve (12) inches shall be allowed from the bottom of the valves to the invert of the vault.

A drain pipe and check valve shall be installed to drain the valve vault back to the wet well but not allow the wet well liquid to enter the valve vault. In addition, a tee or cross with bleedable blind flange shall be provided in the valve vault.

6. Magnetic Flow Meter and Shutoff Valves

When variable speed pumping systems are required, a magnetic flow meter and an eccentric plug valve shall be installed on the discharge piping per Section 503.09. A minimum clearance of twelve (12) inches shall be allowed between the bottom of the valves to the invert of the vault.

Straight sections of pipe upstream and downstream of the magnetic flow meter shall be per manufacture's recommendation.

7. Drop Pipes

Drop pipes shall be installed in all incoming pipes four (4) feet or greater above the pump-on elevation or as directed by the Department.

503.08 Control System Requirements – Level 3 Lift Stations

The Control System Requirements for Level 3 lift stations with constant speed pumps shall be per the current Department specifications or as follows:

1. Overall Lift Station Control System Enclosure Requirements

a. General Requirements:

i. Control and electrical components shall be individually equipment rack mounted as shown on schematics and as follows:

- Pump Control Panel. NEMA 4X stainless steel with dead front and internal swing out panel door. Include pump controls, operator interface, telemetry equipment, and uninterruptible power supply.
- Power distribution panel. NEMA 4X stainless steel. Include phase monitor, surge protection devices, branch circuit breakers, and motor starters.
- Utility approved meter socket.
- Service entrance rated NEMA 3R double throw fused main disconnect switch for utility power and portable emergency generator connection. Include exterior mounted weather proof generator receptacle mounted to disconnect enclosure. Disconnect and receptacle shall be suitable for outdoor use.
- NEMA 3R control power transformer, suitable for outdoor use.

Note to specifier: Covert alarm system required on interim basis until SCADA System is operational

- NEMA 4X rated "Covert" alarm system.

ii. Enclosures shall be mounted on lift station concrete pad. Concrete pad shall be a minimum three inches higher than the adjacent ground. Concrete pad shall be a minimum of one foot larger in dimension than enclosure plus radius of door swings. Orientate panel placement so that panel doors do not open over or near wet well opening.

iii. Provide enclosures with following additional accessories:

- Drip shield.
- Padlock hasp.
- Stainless steel 3-point latch to allow panel opening without tools.
- In addition to above, Pump Control Panel shall be provided with:
  - Fluorescent door switch activated light.
  - GFI 120 VAC receptacle.
  - Thermostatically controlled heaters sized to maintain panel internal temperature at 50°F with outdoor temperature of -20°F.

2. Electrical Requirements

a. The lift station shall have electric-utility-delivered 3-phase, 60Hz, 4-wire wye, or delta power. All stations powered by 3-phase primary voltage shall have a minimum 2.0 KVA single-phase, 480/240 to 120/240 VAC transformer. **Use of phase converters to derive 3-phase power from 1-phase power source is prohibited.**

b. Include provision for connection of OWNER provided portable emergency generator. Receptacle shall be rated for 200 amps, 600 volts. Coordinate receptacle type and manufacturer with OWNER to assure capability with OWNER'S generator plug.

c. Motor starters shall be **NEMA**-rated magnetic type with a 120 volt control coil, and three thermal overload relays with a minimum size of NEMA-1.

3. Wiring, Termination, and Labeling Requirements

a. Wiring:

i. In addition to NEC and NEMA requirements, wiring shall conform to

following:

- Power: 12 AWG stranded minimum, type MTW, 600 V.
- Control: 16 AWG stranded minimum, type MTW, 300 V.
- Analog Signal: Twisted pair, 18 AWG, Beldon 8760 or equal.

ii. Wire color code:

- AC neutral conductor: White.
- AC hot conductor: Black.
- Grounding conductor: Green.
- AC control conductor, powered from within panel: Color coded and numbered.
- AC control conductor, powered from remote source: Yellow.
- DC (+) power conductor: Blue.
- DC (-) power conductor: Blue.
- DC control conductor: Blue.
- Twisted pair cable (-) signal conductor: White.
- Twisted pair cable (+) signal conductor: Black.
- Intrinsically safe conductors – light blue.

iii. Design control panels to keep 3-phase power, 120-vac power and discrete signals, and analog and other low voltage signals separated.

- Do not run 3-phase power, 120-vac power and discrete signals, and analog or other low voltage signals in the same conduit or wire-duct.
- Where 3-phase power, 120-vac power and discrete signals, and analog or other low voltage signals must cross, they shall do so at right angles.

iv. Internal Panel Wiring Within Wire Duct:

- Wherever feasible plastic wire duct with cover shall be used for routing of wire within control panel.
- Size wire duct to be no more than 50% full.
- Maintain 2" clearance between wire duct and terminals.

v. Internal Panel Wiring outside of wire duct.

- Wiring outside of ducts shall be restrained by use of plastic wire-ties.
- Restrain wiring a minimum of every six inches.
- Provide abrasion protection for wires passing through holes or across abrasive metal edges.
- Adhesive type wire fasteners shall not be used. Hard screw type shall be employed.

b. Terminations:

i. Wiring within control panel shall be continuous and terminated only at terminal blocks or equipment terminals. Splices or butt connectors shall not be used within panel.
ii. Other than terminal to terminal bussing as described below, no more than one wire shall be terminated at any one terminal.
iii. Make external connections by way of numbered terminal blocks on numbered terminal strips.
iv. When signals are powered from remote location, switched terminal blocks shall be used where conductors enter or leave panel.
v. When signals are powered from within panel, fused terminal blocks shall be used where conductors enter or leave panel.
vi. Provide integral bussing system on terminal block array where more than two terminations require common source or drain connection. Jumpered terminations shall not be acceptable.

vii. Include provisions for grounding of shields on shielded twisted pair cables entering or leaving panel. Cable shields shall be grounded at terminal block end only.

viii. Provide separate locations on terminal strips for each of the following types of signals.

- 480 or 240-vac power circuits.
- 120-vac power circuits.
- 120-vac discrete signals.
- 24 or 48 Vdc discrete signals.
- Analog signals.
- Serial or parallel digital communication signals.

ix. Provide separate terminal strip for intrinsically safe circuits. Intrinsically safe wiring shall be separated by non-conducting or grounded barrier within panel, and not combined with any other wiring within conduit or wire duct.

c. Power Distribution:

i. Panels having 3-phase power supply:

- Service entrance rated NEMA 3R double throw fused main disconnect switch to isolate utility power to panel and allow connection of portable emergency generator. Mount generator receptacle to disconnect enclosure. Disconnect and generator receptacle shall be rated for 200 A.
- Provide circuit breakers for all motor starters provided.
- Provide phase monitor relay (PMR).
- If panel includes separate 120 vac control power supply, provide auxiliary contact to isolate control power when main circuit breaker is opened.
- 480(240, 208) / 120 control power transformer requirements:
  - Both primary leads shall be fused.
  - First secondary lead shall be fused.
  - Second secondary lead shall be grounded.

ii. Panels having 120 vac power supply:

- Provide circuit breaker on power supply entering panel.

iii. Provide separately fused power supply to each major panel component.
iv. Panels using modular or solid state I/O devices.

- Provide separately fused power circuit for panel powered I/O signals entering panel from field devices. Provide separate circuit for each module.
- Include digital transient surge suppressor/varistor installed in parallel with output contact at terminal strip for each output signal driving an inductive load including:
  - Relays.
  - Solenoids.
  - Motor starters.
  - Motors.

4. UPS Requirements

Note to specifier: Covert alarm system replaces radio on interim basis until SCADA System is operational. Delete radio and Ethernet switch in item b

below if Covert alarm system is to be included in lift station specification.

a. Provide true on-line non switching uninterruptible power supply (UPS).

b. UPS shall supply power to PLC, OIU, radio, Ethernet switch, field instruments, and other low voltage control devices.

c. UPS shall have enough capacity to power these devices for a period of 2 hours after the utility power has failed. Provide with extended battery module to meet this requirement.

d. UPS shall provide dry contacts to PLC for utility fail and low battery power alarms.

e. Minimum UPS size shall be 700 VA.

f. Double power conversion on-line operation including rectifier and inverter, constantly conditioned AC output.

g. Provide make before break manually operated bypass switch or other means to bypass UPS to allow operation of system controls in event of UPS failure.

h. Eaton Powerware Model 9125.

Note to specifier: Covert alarm system replaces radio and antenna on interim basis until SCADA System is operational. Delete item 5 below if Covert alarm system is to be included in lift station specification.

5. Ethernet Switch, Radio, Antenna, and Antenna Mounting Requirements

a. Provide Ethernet switch, radio, antenna, antenna cable, and antenna mounting pole.

b. Radio, antenna cable, antenna, and lightning and surge protection devices shall be purchased from the City's approved radio equipment supplier to ensure compatibility with City's radio based SCADA communication network used for lift station monitoring.

c. Ethernet switch and radio shall be mounted within Pump Control Panel.

d. Contractor shall determine signal strength available at lift station location using both 900 MHz and 5.7 GHz radio test unit supplied by the City. Available signal strength shall be tested at elevations of 20' and 15' above ground level and signal strength test results shall be supplied to the City.

e. Contractor shall determine the most suitable location for the antenna based on the results of signal strength testing. Antenna pole shall be affixed to lift station concrete pad.

f. Based on the results of signal strength testing, the Contractor shall purchase either the 900 MHz or 5.7 GHz radio, as selected by the City, from the City's approved radio equipment supplier.

g. Contractor shall mount the antenna in the selected location, and provide antenna cable in conduit.

h. Where lift station structure does not exist or is unsuitable for antenna mounting, antenna mounting pole shall be up to 20' tall, 4" in diameter, aluminum, and set within concrete or firmly affixed to pump station.

i. Where lift station structure is suitable for antenna mounting, antenna mounting pole shall be 2" in diameter, aluminum, and firmly affixed to pump station.

j. Provide grounding of antenna pole in accordance with NEC requirements.

k. Programming of radio shall by City.

6. Field Instrument Requirements

a. Provide submersible level transmitter to sense level in wet well and control pump on/off operation.

i. Hydrostatic pressure measurement.
ii. Loop powered.
iii. 4 – 20 mAdc output signal.
iv. 316 stainless steel submersible housing and diaphragm, Viton grommet and o-ring. Provide with stainless steel braided support cable to prevent transmitter from being supported by signal cable.
v. Accuracy +/- 0.25% of span including linearity, hysteresis, and repeatability.
vi. Provide with lightning and surge protector to be mounted in Pump Control Panel.
vii. CSA approved intrinsically safe when used with appropriate barrier.
viii. Ametek model 575.

b. Provide wet well float switches to sense high and low level in wet well and control standby pump on/off operation. Standby pump operation shall be independent of PLC.

i. SPDT contacts, rated 1 amp at 150 VAC/VDC inductive, mechanical life 10 million operations.
ii. 316 stainless steel mounting hardware. Mounting shall be via weight and chain/cable not requiring entry to wet well for cleaning or replacement.
iii. Connery Model 2900 pear shaped neoprene covered mercury switch ball float of standard size, supported by stainless steel cable.

c. For lift stations containing a dry well, or areas prone to flooding due to pump seal or piping failure, provide dry well float switch to sense dry well flooding.

i. SPDT contacts, rated 1 amp at 150 VAC/VDC inductive, mechanical life 10 million operations.
ii. Connery Model 2900 pear shaped neoprene covered mercury switch ball float of standard size.

d. Provide intrusion detection switches.

i. When control and electrical components are mounted outdoors, provide intrusion detection switches for electrical and control equipment enclosure.
ii. When control and electrical components are mounted indoors provide intrusion detection switches for all entrances into pump station.
iii. Reed switch enclosed in ABS plastic case, normally closed contact.
iv. Sentrol 1045 series or approved equal.

7. Pump Control Panel Requirements

Note to specifier: Covert alarm system replaces radio and Ethernet switch on interim basis until SCADA System is operational. Delete radio and Ethernet switch in item a below if Covert alarm system is to be included in lift station specification.

a. A Pump Control Panel shall be provided to house the Programmable Logic Controller (PLC), Operator Interface Unit (OIU), Ethernet switch, radio, lightning and surge protection devices, and pump monitoring equipment.

b. When Pump Control Panel is mounted outdoors, provide with a low temperature switch, set at 40 °F, mounted within the enclosure to alarm failure of heater.

c. The automatic pump operation, automatic pump lead-lag alteration, and all control logic commands shall be performed by the PLC. The PLC shall be Allen Bradley Micrologix 1200, with no substitutions allowed, and shall meet the following requirements:

i. Minimum 24 Discrete Inputs
ii. Minimum 12 Discrete Outputs
iii. Minimum 4 Analog Inputs
iv. Minimum 2 Analog Output
v. 6 K-word memory minimum, 2 K data storage, 4 K program.
vi. Real time clock
vii. Floating point math
viii. PID control
ix. Ethernet interface

d. The OIU shall be Allen Bradley Panelview Plus 400 meeting the following requirements:

i. 3.7" monochrome display
ii. 320 X 240, 32 level greyscale resolution
iii. Keypad
iv. NEMA 12/4X
v. DC Powered

e. The Ethernet switch shall be Phoenix Contact meeting the following requirements:

i. 4 RJ45 ports ports
ii. 10/100 Mbits/s
iii. 0 to 55 °C operating temperature
iv. DC Powered

f. Provide the following front of panel mounted devices to be labeled as indicated. For outdoor locations, devices shall be mounted to swing out panel door.

i. "Hand-Off-Automatic" selector switch for each pump, with the hand mode wired for manual operation independent of the PLC
ii. Operator interface

g. PLC I/O signals:

i. Discrete Inputs:

- Pump 1 running
- Pump 2 running
- Pump 1 "Auto" (from panel mounted HOA switch)
- Pump 2 "Auto" (from panel mounted HOA switch)
- Pump 1 seal fail (submersible pump applications only, alarm display only – no pump interlock)
- Pump 2 seal fail (submersible pump applications only, alarm display only – no pump interlock)
- Pump 1 motor high motor temperature (submersible pump applications only), motor breaker trip, and motor starter overload combined into common alarm and used to interlock pump operation.
- Pump 2 motor high motor temperature (submersible pump

10505 N. College Avenue
Indianapolis, Indiana 46280
weihe.net
317 | 846 - 6611
800 | 452 - 6408
317 | 843 - 0546 *fax*
ALLAN H. WEIHE, P.E., L.S. - FOUNDER

WEIHE ENGINEERS
Land Surveying | Civil Engineering
Landscape Architecture

PROJECT NO.: W15.0316
DWG NAME: w150316-C904 SS spec.dwg
DESIGNED BY: RLW
DRAWN BY: RLW
CHECKED BY: BJS
DATE: 01.29.2016

REVISIONS AND ISSUES	DATE	BY
SUBMITTED FOR COUNTY SURVEYOR REVIEW	10.16.2015	BJS
ISSUED FOR TAC REVIEW	01.29.2016	BJS

STEVEN SCOTT RUCKER REGISTERED PE11300279 STATE OF INDIANA PROFESSIONAL ENGINEER
APPROVAL PENDING NOT FOR CONSTRUCTION

STEVEN SCOTT RUCKER P.E. 11300279

PREPARED FOR: Culver's of WESTFIELD
17651 SUN PARK DRIVE, WESTFIELD, IN 46074

CITIZENS - SANITARY SEWER SPECIFICATIONS
Part of SW/4, Section 36, Township 19 North, Range 3 East, Washington Township, Hamilton County, Indiana

SHEET NO. C907

PROJECT NO. W15.0316

LOCATION: H:\2015\w150316\Engineering\design\conset\w150316-C904 SS spec.dwg
LAYOUT: C907
DATE/TIME: January 28, 2016 - 2:47pm
PLOTTED BY: schoeffb

applications only), motor breaker trip, and motor starter overload combined into common alarm and used to interlock pump operation.

- Alarm test (from push button)
- Alarm silence (from push button)
- High wet well level
- Low wet well level
- Dry well flood
- Lift station intrusion
- Low temperature
- Low battery power
- Utility power fail
- Phase fail

ii. Discrete Outputs:

- Pump 1 required
- Pump 2 required
- Pump 1 seal test (submersible pump applications only)
- Pump 2 seal test (submersible pump applications only)
- Common alarm to horn and light

Note to specifier: Covert alarm outputs required on interim basis until SCADA System is operational

- Covert Alarm 1
- Covert Alarm 3
- Covert Alarm 4
- Covert Alarm 5

iii. Analog Inputs:

- Wet well level

h. OIU shall be configured to allow:

i. Display pump run, fail, automatic mode, overload, seal fail, motor over-temperature, accumulated pump run time, and accumulated pump number of starts for each pump. Display all discrete and analog signals input to PLC, and calculated or derived parameters including communication fail, crew on site, intrusion, and flood control mode.
ii. Wetwell level, high and low level alarms.
iii. Lead Pump 1 / Lead Pump 2 / Lead Pump Alternate' selection.
iv. Calculated lift station flow rate and accumulated flow total.
v. Display communication fail (to SCADA central).
vi. Display status of all input signals to PLC.
vii. Capability to place pump "Out of Service". Display "Out of Service" status at OIU.
viii. Configure to allow "Crew on Site" input. Allow entry of operator's 4 digit identification number after "Crew on Site" has been entered. This function is to work in conjunction with the Intrusion switch. Once an intrusion has been detected the crew will have a set amount of time to enter a valid code before the intrusion alarm is activated.
ix. Operator data entry for adjustable set points, including pump on/off levels, time delays, etc. Allow for operator entry of 4 digit password prior to accepting parameter changes.

i. System programming guidelines:

i. Provide program documentation for all OIU and PLC program files developed for the system. PLC program documentation shall include comments for all registers used and sufficient rung comments to describe operation of logic used within program. Provide four copies of program documentation on CD.

ii. Automatic pump control shall start and stop pumps in a lead and lag fashion based on wet well level input.

iii. Provide lead pump alternation on each successive lead pump shutdown when automatic alternation is selected.
iv. Provide pump fault logic to sense discrepancy between pump-required output being turned on and no pump run signal being received. Configure system to generate fault on any condition including motor overload, motor over temperature, seal failure or power disconnect.
v. Provide time delay on pump required outputs, initially set at 10 seconds and 30 seconds, to prevent simultaneous pump restart on restoration of control power.
vi. "Out of Service" entry shall remove pump from operating sequence, and prevent alarms from being generated for pump.
vii. All alarms shall automatically reset when the alarm condition has cleared. An adjustable 0-15 minute time delay relay shall be activated and timed-out prior to transmitting the high or low wet well level condition.
viii. Pump accumulated run time shall be calculated for each pump.
ix. Pump accumulated number of starts shall be calculated for each pump.
x. Provide routine to calculate lift station draw down time. Draw down time data shall be time stamped, and indicate which pump(s) running during draw down event.
xi. Program to ensure that regardless of configuration of backup hardware, (ie: back up bell floats when primary level control device is pressure transducer), primary level control device automatically takes over when level of wet well returns to desired operating level.
xii. Provide routine to calculate lift station flow rate and accumulated lift station accumulated flow total. Calculation shall be based on following:

- Wet well dimensions, include adjustable offset for equipment, piping, or other items affecting wet well volume and account for cross-sectional changes between minimum and maximum levels. Calculations shall be made such that changes to pump on and off level set-points shall not require change to flow calculation routine.
- Wet well level rate of rise shall be used to calculate inflow rate when pumps are not operating.
- During pump run events, inflow rate shall be calculated as the average inflow rate occurring immediately before and after pump run event.

xiii. PLC shall be configured to periodically transfer information to SCADA Central HMI. Transfer of information shall occur periodically based on information request from SCADA Central HMI, and be initiated by lift station PLC on occurrence of alarm condition. Periodic data transfer of information to SCADA Central HMI shall include:

- Lift station accumulated flow total.
- 10 minute averaged flow rate data. Time stamped average flow rate data values shall be logged internally to PLC memory. Logged data shall be retained until data successfully transferred to HMI, at which point it shall be deleted.
- Pump elapsed run time data
- Accumulated number of starts for each pump
- Coordinate programming requirements with City

- Data transfer shall be configured to allow SCADA Central HMI to emulate all data input and display functions present at OIU, including display all discrete and analog signals input to PLC, and calculated or derived parameters including communication fail, crew on site, intrusion, and float control mode.
- Data transfer to and from SCADA Central HMI shall take place using contiguous PLC register locations to maximize efficiency of data transfer. Register usage and addressing shall be coordinated with City.
- Include provision for periodic receipt of current time and date SCADA Central HMI.

j. Required modifications to the Lift Station Central SCADA system monitoring software at the Waste Water Treatment Plant will be performed by the City.

663.09 Control System Requirements – Level 2 Lift Stations

The Control System Requirements for Level 2 Lift Stations with variable speed pumps shall be per the current Department specifications or as follows:

1. Overall Lift Station Control System Enclosure Requirements

Note to specifier: Select item a or b below as appropriate

a. Outdoor Location Requirements:

i. Control and electrical components shall be individually equipment rack mounted as shown on schematics and as follows.

- Pump Control Panel: NEMA 4X stainless steel with dead front and internal swing out panel door. Include pump controls, operator interface, flow meter transmitter, telemetry equipment, and uninterruptible power supply.
- Power distribution panel: NEMA 4X stainless steel. Include phase monitor, surge protection devices, and branch circuit breakers.
- Utility approved meter socket.
- Service entrance rated NEMA 3R double throw fused main disconnect switch for utility power and portable emergency generator connection. Include exterior mounted weather proof generator receptacle mounted to disconnect enclosure. Disconnect and receptacle shall be suitable for outdoor use.
- NEMA 3R control power transformer: suitable for outdoor use.

Note to specifier: Covert alarm system required on interim basis until SCADA System is operational

- NEMA 4X stainless steel rated 'Covert' alarm system.

ii. Provide NEMA 4X rated variable speed drives suitable for outdoor use. Drive enclosure shall be end product of drive manufacturer. Drive may be mounted to equipment rack or freestanding as shown on schematics.

iii. Enclosures shall be mounted on lift station concrete pad. Concrete pad shall be a minimum three inches higher than the adjacent ground. Concrete pad shall be a minimum of one foot larger in dimension than enclosure plus radius of door swings. Orientate panel

placement so that panel doors do not open over or near wet well opening.

iv. Provide enclosures with following additional accessories:

- Drip shield.
- Padlock hasp.
- Stainless steel 3 point latch to allow panel opening without tools.
- In addition to above, Pump Control Panel shall be provided with:
  - Fluorescent door switch activated light.
  - GFI 120 VAC receptacle.
  - Thermostatically controlled heaters sized to maintain panel internal temperature at 50 F with outdoor temperature of -20 F.

b. Indoor Location Requirements

i. Control and electrical components shall be individually wall mounted in NEMA 12 rated enclosures as follows.

- Pump Control Panel. Include GFI 120 VAC receptacle within panel.
- Service rated fused disconnect switch for utility power connection.
- Power distribution panel, including surge protection devices, branch circuit breakers, and motor starters.
- Uninterruptible power supply.
- Flow meter transmitter.
- Control power transformer.
- Variable speed drives.
- Double throw transfer switch for use with portable emergency generator.
- 'Covert' alarm system

Note to specifier: Covert alarm system required on interim basis until SCADA System is operational

ii. Size enclosures to adequately dissipate heat generated by equipment mounted in or on panel.

iii. Include exterior mounted weather proof generator connection.

2. Electrical Requirements

a. The lift station shall have electric-utility-delivered 3-phase, 60Hz, 4-wire wye, or delta power. All stations powered by 3-phase primary voltage shall have a minimum 2.0 KVA single phase, 480/240 to 120/240 VAC transformer. **Use of phase converters to derive 3 phase power from 1-phase power source is prohibited**.

b. Include provision for connection of OWNER provided portable emergency generator. Receptacle shall be rated for 200 amps, 600 volts. Coordinate receptacle type and manufacturer with OWNER to assure capability with OWNER'S generator plug.

3. Wiring, Termination, and Labeling Requirements

a. Wiring:

i. In addition to NEC and NEMA requirements, wiring shall conform to following:

- Power: 12 AWG stranded minimum, type MTW, 600 V.
- Control: 16 AWG stranded minimum, type MTW, 300 V.
- Analog Signal: Twisted pair, 18 AWG, Belton 8760 or equal.

ii. Wire color code

- AC neutral conductor: White
- AC hot conductor: Black.
- Grounding conductor: Green.
- AC control conductor, powered from within panel: Color coded and numbered.
- AC control conductor, powered from remote source: Yellow.
- DC (+) power conductor: Blue.
- DC (-) power conductor: Blue.
- DC control conductor: Blue.
- Twisted pair cable (-) signal conductor: White.
- Twisted pair cable (+) signal conductor: Black.
- Intrinsically safe conductors – light blue.

iii. Design control panels to keep 3-phase power, 120 vac power and discrete signals compatibility with other low-voltage signals in the same conduit or wire-duct.

- Do not run 3-phase vac power, 120-vac power and discrete signals, and analog or other low-voltage signals in the same conduit or wire-duct.
- Where 3-phase vac power, 120-vac power and discrete signals, and analog or other low-voltage signals must cross, they shall do so at right angles.

iv. Internal Panel Wiring Within Wire Duct

- Wherever feasible plastic wire duct with cover shall be used for routing of wire within control panel.
- Size wire duct to be no more than 50% full.
- Maintain 2" clearance between wire duct and terminals.

v. Internal Panel Wiring outside of wire duct

- Wiring outside of ducts shall be restrained by use of plastic wire-ties.
- Restrain wiring a minimum of every six inches.
- Provide abrasion protection for wires passing through holes or across abrasive metal edges.
- Sheet metal screw fasteners shall not be used. Hard screw type shall be employed.

b. Terminations:

i. Wiring within control panel shall be continuous and terminated only at terminal blocks or equipment terminals. Splices or butt connectors shall not be used within panel.
ii. Other than terminal to terminal bussing as described below, no more than one wire shall be terminated at any one terminal.
iii. Make external connections by way of numbered terminal blocks on numbered terminal strips.
iv. When signals are powered from remote location, switched terminal blocks shall be used where conductors enter or leave panel.

v. When signals are powered from within panel, fused terminal blocks shall be used where conductors enter or leave panel.
vi. Provide integral bussing system on terminal block array where more than two terminations require common source or drain connection.

jumpered terminations shall not be acceptable.
vii. Include provisions for grounding of shields on shielded twisted pair cables entering or leaving panel. Cable shields shall be grounded at terminal block end only.
viii. Provide separate locations on terminal strips for each of the following types of signals.

- 480 or 240-vac power circuits.
- 120-vac power circuits.
- 120vac discrete signals.
- 24 or 48 Vdc discrete signals.
- Analog signals.
- Serial or parallel digital communication signals.

ix. Provide separate terminal strip for intrinsically safe circuits. Intrinsically safe wiring shall be separated by non-conducting or grounded barrier within panel, and not combined with any other wiring within conduit or wire duct.

c. Power Distribution:

i. Panels having 3-phase power supply:

- Service entrance rated NEMA 3R double throw fused main disconnect switch to isolate utility power to panel and allow connection of portable emergency generator. Plant generator receptacle to disconnect enclosure. Disconnect and generator receptacle shall be rated for 200 A.
- Provide circuit breakers for all variable frequency drives provided.
- Provide phase monitor relay (PMR).
- If panel includes separate 120 vac control power supply, provide auxiliary contact to isolate control power when main circuit breaker is opened.
- 480(240, 208) / 120 control power transformer requirements.
  - Both primary leads shall be fused.
  - First secondary lead shall be fused.
  - Second secondary lead shall be grounded.

ii. Panels having 120 vac power supply:

- Provide circuit breaker on power supply entering panel.

iii. Provide separately fused power supply to each major panel component.

iv. Panels using modular or solid state I/O devices.

- Provide separately fused power circuit for panel powered I/O signals entering panel from field devices. Provide separate circuit for each module.
- Include digital transient surge suppressor/varistor installed in parallel with output contact at terminal strip for each output signal driving an inductive load including:
  - Relays.
  - Solenoids.
  - Motor starters.
  - Motors.

4. VFD Requirements

alarms.
e. Minimum UPS size shall be 700 VA.
f. Double conversion on-line operation including rectifier and inverter, constantly conditioned AC output.
g. Provide make before break manually operated bypass switch or other means to bypass UPS to allow operation of system controls in event of UPS failure.
h. Eaton Powerware Model 9125.

Note to specifier: Covert alarm system replaces radio and antenna on interim basis until SCADA System is operational. Delete radio and Ethernet switch in item a below if Covert alarm system is to be included in lift station specification.

6. Ethernet Switch, Radio, Antenna, and Antenna Mounting Requirements

a. Provide Ethernet switch, radio, antenna, antenna cable, and antenna mounting pole:

b. Radio, antenna cable, antenna, and lightning and surge protection devices shall be purchased from the City's approved radio equipment supplier to assure compatibility with other low-voltage signals. City's radio based SCADA communication network used for lift station monitoring.

c. Ethernet switch and radio shall be mounted within Pump Control Panel.

d. Contractor shall determine signal strength available at lift station location using both 900 MHz and 5.7 GHz radio test unit supplied by the City. Available signal strength shall be tested at elevations of 20' and 15' above ground level and signal strength test results shall be supplied to the City.

e. Contractor shall determine the most suitable location for the antenna based on the results of signal strength testing. Antenna pole shall be affixed to lift station concrete pad.

f. Based on the results of signal strength testing, the Contractor shall purchase either the 900 MHz or 5.7 GHz radio, as selected by the City, from the City's approved radio equipment supplier.

g. Contractor shall mount the antenna in the selected location, and provide antenna cable in conduit.

h. Where lift station structure does not exist or is unsuitable for antenna mounting, antenna mounting pole shall be up to 29' tall, 4" in diameter, aluminum, and set within concrete or firmly affixed to pump station.

i. Where lift station structure is suitable for antenna mounting, antenna mounting pole shall be 2" in diameter, aluminum, and firmly affixed to pump station.

j. Provide grounding of antenna pole in accordance with NEC requirements.

k. Programming of radio shall by City.

7. Field Instrument Requirements

a. Provide submersible level transmitter to sense level in wet well and control pump on/off operation.

i. Hydrostatic pressure measurement.
ii. Loop powered
iii. 4 – 20 mAdc output signal.
iv. 316 stainless steel submersible housing and diaphragm, Viton

grommet and o-ring. Provide with stainless steel braided support cable to prevent transmitter from being supported by signal cable.
v. Accuracy +/- 0.25% of span including linearity, hysteresis, and repeatability.
vi. Provide with lightning and surge protector to be mounted in Pump Control Panel.

vii. Suitable for use in Class 1, Division 1, Group D hazardous classified location when used with appropriate barrier.
viii. Ametek model 575.

b. In high grease or other applications, ultrasonic level sensor may be used with approval from OWNER.

i. Ultrasonic level measurement.
ii. 120 VAC powered.
iii. 4 – 20 mAdc output signal.
iv. Accuracy +/- 0.1 % of span including linearity, hysteresis, and repeatability.
v. Provide with lightning and surge protector to be mounted in Pump Control Panel.
vi. Suitable for use in Class 1, Division 1, Group D hazardous classified location.
vii. Manufacturers:

- Mettronics MINI-Ranger
- Endress and Hauser Prosonic M
- No substitutions allowed

c. Provide wet well float switches to sense high and low level in wet well and control standby pump on/off operation. Standby pump operation shall be independent of PLC.

i. SPDT contacts, rated 1 amp at 150 VAC/VDC inductive, mechanical life 10 million operations.
ii. Cannery Model 2900 pear shaped neoprene covered mercury switch ball float of standard size , supported by stainless steel cable.

d. For lift stations containing a dry well, or areas prone to flooding due to pump seal or piping failure, provide dry well float switch to sense dry well flooding.

i. SPDT contacts, rated 1 amp at 150 VAC/VDC inductive, mechanical life 10 million operations.
ii. Cannery Model 2900 pear shaped neoprene covered mercury switch ball float of standard size.

e. Provide intrusion detection switches.

i. When control and electrical components are mounted outdoors, provide intrusion detection switches for electrical and control equipment enclosures.
ii. When control and electrical components are mounted indoors provide intrusion detection switches for all entrances into pump station.
iii. Read switch enclosed in ABS plastic case, normally closed contact.
iv. Sentrol 1045 series or approved equal.

f. Provide magnetic flow meter:

i. Size meter to maintain average velocity of 3 fps/sec.
ii. System accuracy of +/- 25% of flow rate with 10:1 turndown.
iii. Meter body:

- Utilize low frequency dc pulse.
- Accidental submergence rating of 30 ft. water for 48 hours.
- Polyurethane or hard rubber liner, 316 stainless steel electrodes.

- Provide with 316 stainless steel grounding rings, use of grounding probes not acceptable.
- Suitable for Class 1, Division II, Hazardous classified location.
- Include isolating plug valves before and after meter body to facilitate meter removal. Include spool piece of same dimensions as meter body.

- Maintain minimum of 5 upstream and 3 downstream unobstructed pipe diameters before and after meter body. Provide separate meter vault if required to meet dimensional requirement. Meter vault shall be provided with sump and flood alarm float switch.

iv. Transmitter:

- 120 VAC, 60 Hz power.
- For outdoor locations, mount on Pump Control Panel internal swing out panel as shown.
- Provide pulsed DC voltage to meter body magnet coils.
- Integral keypad/display.
- Automatic empty pipe detection.

v. Manufacturers:

- Rosemount
- Krohne
- ABB
- Foxboro
- Sparling
- No substitutions allowed.

8. Pump Control Panel Requirements

Note to specifier: Covert alarm system replaces radio and Ethernet switch on interim basis until SCADA System is operational. Delete radio and Ethernet switch in item a below if Covert alarm system is to be included in lift station specification.

a. A Pump Control Panel shall be provided to house the Programmable Logic Controller (PLC), Operator Interface Unit (OIU), Ethernet switch, radio, lightning and surge protection devices, and pump monitoring equipment.

b. When Pump Control Panel is mounted outdoors, provide with a low temperature switch, set at 40 °F, mounted within the enclosure to alarm failure of heater.

c. The automatic pump operation, automatic pump lead-lag alteration, and all control logic commands shall be performed by the PLC. The PLC shall be Allen Bradley, Micrologix 1200, with no substitutions allowed, and shall meet the following requirements:

i. Minimum 32 Discrete Inputs.
ii. Minimum 12 Discrete Outputs.
iii. Minimum 6 Analog Inputs.
iv. Minimum 4 Analog Output.
v. 6 K-word memory minimum, 2 K data storage, 4 K program.
vi. Real time clock.
vii. Floating point math.
viii. PID control.
ix. Ethernet interface
x. DC Powered

d. The OIU shall be Allen Bradley Panelview Plus 400 meeting the following requirements.

i. 3.7" monochrome display
ii. 320 X 240, 32 level greyscale resolution
iii. Keypad
iv. NEMA 12/4X
v. Ethernet Interface

vi. DC Powered

e. The Ethernet switch shall be Phoenix Contact meeting the following requirements.

i. 4 RJ45 ports ports
ii. 10/100 Mbit/s
iii. 0 to 55 °C operating temperature
iv. DC Powered

f. Provide the following front of panel mounted devices to be labeled as indicated. For outdoor locations, devices shall be mounted to swing out panel door.

i. 'Hand-Off-Automatic' selector switch for each pump, with the hand mode wired for manual operation independent of the PLC.
ii. "Constant Speed (CS)/Variable Speed (VS)" selector switch for each pump. Speed switch active in the "Hand" mode of operation.
iii. "Speed Control" potentiometer for each pump. Potentiometer shall be wired for manual mode operation independent of the PLC when "Hand" mode, "Variable Speed" operation has been selected via front of panel mounted hand switches.
iv. Operator interface.

g. PLC I/O signals:

i. Discrete Inputs.

- Pump 1 running
- Pump 2 running
- Pump 1 "Auto" (from panel mounted hand switch)
- Pump 2 "Auto" (from panel mounted hand switch)
- Pump 1 seal fail (submersible pump applications only, alarm display only – no pump interlock)
- Pump 2 seal fail (submersible pump applications only, alarm display only – no pump interlock)
- Pump 1 motor high motor temperature (submersible pump applications only), motor breaker trip, and motor starter overload combined into common alarm and used to interlock pump operation.
- Pump 2 motor high motor temperature (submersible pump applications only), motor breaker trip, and motor starter overload combined into common alarm and used to interlock pump operation.
- VFD 1 fault
- VFD 2 fault
- VFD 1 high temperature
- VFD 2 high temperature
- VFD 1 low temperature
- VFD 2 low temperature
- High wet well level
- Low wet well level
- Dry well flood
- Meter vault flood
- Lift station intrusion
- Low temperature
- Low battery power
- Utility power fail

- Phase fail

ii. Discrete Outputs:

- Pump 1 required – variable speed
- Pump 2 required – variable speed
- Pump 1 required – constant speed
- Pump 2 required – constant speed
- Pump 1 seal test (submersible pump applications only)
- Pump 2 seal test (submersible pump applications only)
- Common alarm to horn and light

Note to specifier: Covert alarm outputs required on interim basis until SCADA System is operational

- Covert Alarm 1
- Covert Alarm 3
- Covert Alarm 4
- Covert Alarm 5

ii. Analog Inputs:

- Pump 1 speed
- Pump 2 speed
- Pump 1 current
- Pump 2 current
- Wet well level
- Flow

iii. Analog Outputs:

- Pump 1 speed control
- Pump 2 speed control

h. OIU shall be configured to allow:

i. Display pump run, pump fail, VFD fail, pump speed, automatic mode, overload, seal fail, motor over-temperature, accumulated pump run time, and accumulated pump number of starts for each pump. Display all discrete and analog signals input to PLC, and calculated or derived parameters including communication fail, crew on site, intrusion, and float control mode.
ii. Wetwell level, high and low level alarms.
iii. Lead Pump 1 / Lead Pump 2 / Lead Pump Alternate' selection.
iv. "Pump Manual/Automatic" mode selection for each pump.
v. "Pump Start", "Pump Stop", and "Manual Speed Control" entry for each pump, active when in the manual mode of control.
vi. Capability to place pump "Out of Service". Display "Out of Service" status at OIU.
vii. Lift station flow rate and integrated flow total.
viii. Display communication fail (to SCADA central).
ix. Display status of all input signals to PLC.
x. Configure to allow "Crew on Site" input. Allow entry of operator's 4 digit identification number after "Crew on Site" has been entered. This function is to work in conjunction with the Intrusion switch. Once an intrusion has been detected the crew will have a set amount of time to enter a valid code before the intrusion alarm is activated.
xi. Operator data entry for adjustable set points, including pump on/off levels, time delays, etc. Allow for operator entry of 4 digit password prior to accepting parameter changes.

i. System programming guidelines:

i. Provide program documentation for all OIU and PLC program files

- Pump elapsed run time data
- Accumulated number of starts for each pump
- Coordinate programming requirements with City

- Data transfer shall be configured to allow SCADA Central HMI to emulate all data input and display functions present at OIU, including display all discrete and analog signals input to PLC, and calculated or derived parameters including communication fail, crew on site, intrusion, and float control mode.
- Data transfer to and from SCADA Central HMI shall take place using contiguous PLC register locations to maximize efficiency of data transfer. Register usage and addressing shall be coordinated with City.
- Include provision for periodic receipt of current time and date SCADA Central HMI.

j. Required modifications to the Lift Station Central SCADA system monitoring software at the Waste Water Treatment Plant will be performed by the City.

663.10 Control System Requirements – Westfield

CONTROLS

1. Controls for each pump station shall include two panels: Starter Panel and RTU (remote terminal unit) panel, and radio antenna installation. The RTU panel shall be integrated into, and be compatible with, the Utility utilities SCADA (supervisory control and data acquisition) system

a. Provide and install RTU panel as part of this contract.
b. Provide and install RTU radio modem and antenna as part of this contract.
c. Provide and install Starter Panel as part of this contract.
d. Programming of RTU and integration to the SCADA system will be provided by the Owner.

2. Remote Terminal Unit (RTU). Provide the Utility utilities SCADA system standard lift station NEMA 4X RTU panel. Design RTU as follows:

a. RTU panel construction:

i. Enclosure shall be Hoffman A-30H24105SSLP NEMA 4X stainless steel, complete with internal mounting panel.
ii. RTU: Bristol Babcock Controlwave Micro 8-Slot CPU w/ 1 Ethernet and 2 serial communication ports.
iii. 16 Pin Digital Output Card
iv. 16 Pin Digital Output Card
v. 8 Pin Analog Input Card
vi. 4 Pin Analog Output Card
vii. 150C-50 Watts, 24 Volt DC power supply
viii. Powerware 3110 uninterruptable power source (UPS)
ix. Series-wired, multi-stage hybrid, 3-stage, active-tracking, power-line protector. Innovative Technology, Inc., Model HS-120-10A.
x. Duplex utility receptacles.
xi. Esteem Ethernet Radio 195Es or MDS TransNET 900 spread-spectrum radio modem as directed by the Utility.
xii. Polyphaser bulkhead mount coaxial cable surge protector.
xiii. Phoenix Contact fused power, two-level, and

grounded three-level terminal blocks as required.
xiv. Phoenix Contact double-pole double-throw terminal block style relays as required.

b. Wire the RTU to accommodate the following input and output signals:

i. Discrete Inputs:

(1) Pump 1 On/Off Status
(2) Pump 2 On/Off Status
(3) Pump 3 On/Off Status
(4) Wetwell High/Low Level
(5) Station Power Failure
(6) Starter Panel Door Position
(7) Pump Failure
(8) Electrical Panel Door
(9) Instrumentation Panel Door
(10) Hatch Door
(11) Security Keypad

ii. Discrete Outputs:

(1) Pump 1 Control
(2) Pump 1 Force Off
(3) Pump 2 Control
(4) Pump 2 Force Off
(5) Pump 3 Control
(6) Pump 3 Force Off
(7) Security Alarm Alert
(8) Security Disarmed
(9) Security Armed

iii. Analog Inputs:

(1) Wetwell Level

c. Control interface between the RTU and the starter panel will be as follows:

i. Under normal automatic condition, control the pump operation from the RTU.
ii. RTU shall be able to turn (force) off any pumps in any mode.

3. Radio Antenna: Provide radio modem antenna, antenna tower, and antenna cable as required.

a. Antenna shall be directional type, pointed towards the Westfield North Elevated Water Tank.
b. Construct antenna tower from a 3 inch aluminum pipe, 24 feet high.

i. The bottom 4 feet shall be coated with bituminous coating and planted underground in concrete base. See drawings.
ii. Antenna height shall be 20 feet above ground.
iii. Cap top of pipe with matching cap.
iv. Install antenna cable inside pipe.
v. Bond tower to electrical ground using #4 bare copper conductors.

4. Starter Panel: Provide NEMA 4X stainless steel starter panel, sized to accommodate starters and controls for specified pumps. Pump sizes shall be as indicated in the pump data sheet. Design starter panel as follows:

a. Panel Construction:

WEIHE ENGINEERS
Land Surveying | Civil Engineering
Landscape Architecture
10505 N. College Avenue
Indianapolis, Indiana 46280
weihe.net
317 846 - 6611
800 452 - 6408
317 843 - 0546 fax
ALLAN H. WEIHE, P.E., L.S. - FOUNDER

REVISIONS AND ISSUES	DATE	BY
SUBMITTED FOR COUNTY SURVEYOR REVIEW	10.16.2015	BJS
ISSUED FOR FAC REVIEW	01.29.2016	BJS

PROJECT NO. W15.0316
DWG NAME: w150316-C904 SS spec.dwg
DESIGNED BY: RJW
DRAWN BY: RJW
CHECKED BY: BJS
DATE: 01.29.2016

STEVEN SCOTT RUCKER P.E. 11300279

PREPARED FOR: of WESTFIELD
17851 SUN PARK DRIVE, WESTFIELD, IN 46074

CITIZENS - SANITARY SEWER SPECIFICATIONS
Part of SW-4 Section 36, Township 19 North, Range 3 East, Washington Township, Hamilton County, Indiana

SHEET NO.
C908

PROJECT NO.
W15.0316

LOCATION: H:\2015\w150316\Engineering\design\consel\w150316-C904_SS spec.dwg
DATE/TIME: January 29, 2016 - 2:48pm
PLOTTED BY: schaefb

i. Provide padlocking hasp and staple, and matching stainless steel drip shield.
ii. Install two 1/2 inch drains similar to Crouse-Hinds No. ECD17 at enclosure bottom, located on opposite sides.
iii. Install two 1/2 inch breathers similar to Crouse-Hinds No. ECD16 at enclosure top, located on opposite sides.
iv. Provide internal mounting panel and a swing-out panel.
v. Furnish properly sized industrial grade corrosion inhibitors inside the enclosure.
vi. Provide thermostatically controlled, properly sized condensate heater. Mount heater on the lower portion of the enclosure internal mounting panel.
vii. Furnish door actuated panel fluorescent light similar to Hoffman Catalog No. A-LFDA2.
viii. Install all wiring within the enclosure in plastic wiring ducts. Do not mix low level signal wiring (24 Volts AD or DC) with high voltage wiring (110 Volts AC or greater) in the same duct.
ix. Terminate all wiring at terminal blocks. Splices will not be permitted.
x. Seal all conduit entry originating from wet well to prevent moisture and gas vapors from entering the enclosure.
xi. Provide twisted shielded pair cables for all low-level signal wiring (mA DC).

b. Terminate incoming power wiring at distribution lugs.

c. Provide service entrance-rated transient-voltage surge suppressor (TVSS) to protect all equipment mounted within the enclosure from switching surges and lightning induced surges. The TVSS shall be Innovative Technology, Inc., Model PTX080-NN400.

d. Distribute power through thermal magnetic circuit breakers and motor circuit protectors. Install units so that they are accessible from the front of the swing-out panel.

i. Provide a motor circuit protector (MCP) for each pump starter. Each MCP shall have adjustable instantaneous trip, and shall be sized for each load.
ii. Provide circuit breaker for step-down transformer.
iii. Furnish circuit breakers with minimum interrupting rating of 25,000 Amperes (AIC).
iv. Provide phase band and voltage monitoring.

e. If incoming power is greater than 120/240 Volts AC, provide transformer to step down incoming power to 120 Volts AC. Transformer shall be high efficiency type, with 105° Celsius temperature class, extra regulation and low losses.

i. Minimum size of transformer shall be 1.0 KVA.
ii. Protect transformer primary feeder with circuit breaker described above.
iii. Size transformer to provide power to all 120 Volt AC loads listed below.

f. Distribute 120-Volt AC-power through single pole, 15-Ampere circuit breakers, each with 10,000 AIC.

i. Provide dedicated circuit breaker for each individual pump control circuit.

ii. Provide a circuit breaker for alarm beacon, utility receptacle, panel light and thermostatically controlled enclosure heater.
iii. Provide dedicated circuit breaker for pump failure monitoring circuit.
iv. Provide dedicated circuit breaker for 24 Volts AC control transformer.
v. Provide dedicated circuit breaker for RTU Panel.

g. Furnish GFI (Ground Fault Interrupting) protected duplex utility receptacle. Mount unit so that it is accessible from the front of the swing-out panel.

h. Provide full-voltage, non-reversing, NEMA-rated starter for each pump. (IEC-rated starters are not acceptable.) Size starters and thermal overloads according to motor nameplate data.

i. Furnish industrial grade, heavy-duty, 30mm, oil-tight and watertight types, control devices.

i. Device contact blocks shall be rated 10-Ampere continuous.
ii. Pilot lights shall be protected LED types rated for 100,000 hours of operation. Colors shall be as specified below.
iii. H-O-A selector switches shall be provided with four (4) contact blocks: one (1) shall only close in "H" position, and three (3) shall only close in "A" position.

j. Provide each pump with the following, swing-out panel mounted, controls:

i. An H-O-A selector switch.
ii. An "ON" pilot light (red).
iii. An "OFF" pilot light (green).
iv. A non-resettable elapsed time meter.
v. A "HI-TEMP" pilot light (amber).
vi. A "SEAL FAIL" pilot light (amber).
vii. A "RESET" pushbutton.

k. Provide the following auxiliary contacts from each starter:

i. Two normally open starter auxiliary contacts.
ii. Two normally closed starter auxiliary contacts.
iii. One normally open auxiliary overload alarm contacts.

5. Design each pump control circuit as follows:

a. RTU output ("force off") shall be able to stop pumps at any mode.
b. When H-O-A selector switch is in "H", the pump motor shall run.
c. When in "O", the pump motor shall be off.
d. When in "A", in normal condition, the pump shall be controlled by RTU output ("pump control"). Pump will shutdown on high motor winding temperature condition.
e. When in "A", in high wetwell condition, the pump shall operate when high level float makes, and stops when low level float breaks.
f. Energize amber "HI-TEMP" light when thermal overload relay trips, or when motor winding temperature detector trips.
g. Energize amber "SEAL FAIL" light when seal failure

contacts trip.
h. Provide single contact for RTU monitoring of all pump failure conditions.

6. Provide motor high winding temperature and motor seal failure detector for each pump. Detector circuit shall shut down motor when detector trips. Motor shall remain shut down until associated "RESET" push button is pressed.

7. Provide dry contacts as necessary for RTU monitoring purposes.

a. Terminate RTU input and output wiring at terminal blocks, grouped and dedicated for RTU interface wiring.

b. Provide extra relays as necessary to achieve intended operation and monitoring.

8. Furnish high and low float switches, which shall be constructed as follows:

a. The float switches shall be watertight, mechanical snap-action type, encased in a chemical-resistant polypropylene casing. Float shall be Model ENM-10 Liquid Level Sensor as manufactured by Flygt, or equal.

b. Suspend each float switch on its own cable, which shall be long enough to reach wetwell floor. Each switch shall be weighted with enamel coated cast iron weight to permit float to pivot for proper operation.

c. Install floats using stainless steel hardware.

d. Float switch elevations shall be adjustable over the entire wet well depth.

9. Furnish a submersible hydrostatic pressure type level sensor.

a. The hydrostatic pressure type level sensor shall be submersible type, suspended on its cable. The sensing diaphragm shall be provided with an end-cap and 304 stainless steel eyebolt.

i. Select sensor range based on wetwell depth.
ii. Sensor output shall be 4 to 20 mA DC proportional to water level, 2-wire type, with loop power supply of 9 to 30 Volts DC.
iii. All exposed parts shall be constructed of 316 Stainless Steel.

b. Fabricate a Teflon coated marine anchor. Weight of anchor shall not exceed 5 pounds.

c. Attach concrete cylinder to the level sensor eyebolt using stainless steel aircraft cable and mechanical crimp. Adjust cable length so that sensing diaphragm is at 12 inches above the cylinder bottom surface.

d. Lower sensor assembly until concrete cylinder rests on wetwell floor. Pull sensor cable taut until sensing diaphragm is at 12 inches above wetwell floor. Do not hang concrete cylinder from sensor cable.

e. Provide at least 10 foot excess cable. Coil excess cable on stainless steel cable rack at top of wetwell.

10. Provide an alarm beacon light, which shall be energized on high

water alarm condition. Alarm beacon light shall be as follows:

a. Watertight, suitable for outdoor installation and provided with a red lens.

b. Light source shall be high intensity strobe type, with light intensity of 1,000,000 (1-million) peak candlepower.

c. Mount unit on top of starter panel enclosure using watertight conduit hub, similar to Myers ST-1, T&B 401, or OZ-Gedney CHM-50T.

11. Acceptable Manufacturers:

a. Motor starters and control components: Allen Bradley.

b. Circuit breakers and motor circuit protectors: Square D.

c. Level sensor:

i. Viatran, model 517, or
ii. Endress+Hauser.

d. Beacon light: Federal Signal "Fireball 2".

503.11 Westfield Lift Station Specifications

PIPING MATERIALS

1. Ductile iron pipe shall meet the requirements of ANSI Specification A21.51 (AWWA C151). Design and manufacture pipe for a working pressure of 150 psi plus 100 psi surge and a safety factor of 2 and a depth of cover indicated on the drawings and specified in this Section. Minimum thickness class shall be 350.

2. Pipe joints shall be push-on type. Joints shall meet the requirements of ANSI/AWWA A21.11/C111. Restrained joints shall be Lok-Ring, Lok-Fast, Lok-Tyte, or approved equal.

3. Fittings shall be cast iron or ductile iron. Fittings shall meet the requirements of ANSI/AWWA C110. Design and manufacture fittings for a pressure rating of 250 psi. Fitting joints shall be mechanical joints or restrained push-on joints. Joints shall meet the requirements of ANSI/AWWA A21.11/C111. Thrust blocking or restrained joints as required or if necessary.

4. Gate valves 4 inch and larger shall be full ductile iron body, epoxy fusion bounded inside and out, non-rising stem gate valves. Valves shall meet the requirements of ANSI/AWWA C500 or C509 and shall have mechanical joint ends. Exposed bolts and nuts shall be stainless steel. Joint accessories shall meet the requirements of ANSI/AWWA C11/A21.11. Valve opening direction shall be counter-clockwise.

a. Gate valves 4 inch and larger installed in structures shall be full ductile iron body, outside screw, and yoke gate valves. Valves shall meet the requirements of ANSI/AWWA C500 or C509, except those parts of ANSI/AWWA C500 or C509 only applicable to non-rising stem gate valves and wrench nuts. Outside screw and yoke gate valves shall have flange joint ends and malleable iron handwheels. Flange joints and accessories shall meet the requirements of ANSI/AWWA C110. Nuts and bolts shall be stainless steel. Gaskets shall be full face and shall be red rubber or approved equal.

b. Gate valves shall be as manufactured by Waterous, U.S.

Valve, or approved equal.

1. Plug valves shall be manually operated, with worm-gear operator handwheel. Stainless steel extension operating stems shall be provided for those valves utilizing floorstand operators.

a. Plug valves shall be as manufactured by DeZurik, or approved equal.

b. All plug valves shall be eccentric plug valves unless otherwise specified.

c. Valves shall be of the non-lubricated eccentric type with resilient faced plugs and shall be furnished with end connections as shown on the plans. Flanged valves shall be faced and drilled to the ANSI 125/150 lb. standard. Mechanical joint ends shall be to the AWWA C111-64, grooved ends per AWWA C606-87. Screwed ends shall be to the NPT standard.

d. Valve bodies shall be of ASTM A126 Class B cast iron. Bodies in 4" and larger valves shall be furnished with a 1/8" welded overlay seat of not less than 90% pure nickel. Seat area shall be raised, with raised surface completely covered with weld to insure that the plug face contacts only nickel. Screwed-in seats shall not be acceptable.

e. Plugs shall be of ASTM A126 Class B cast iron. The plug shall have a cylindrical seating surface eccentrically offset from the center of the plug shaft. The interference between the plug face and body seat, with the plug in the closed position, shall be externally adjustable in the field with the valve in the line under pressure. Plug shall be resilient faced with neoprene or hycar, suitable for use with sewage.

f. Valves shall have sleeve type metal bearings and shall be of sintered, oil impregnated permanently lubricated type 316 ASTM A743 Grade CF-8M in ½" sizes. In valves larger than 36", the upper and lower plug journals shall be fitted with ASTM A240 type 316 stainless sleeves with bearings of ASTM B30, Alloy C95400 aluminum bronze. Non-metallic bearings shall not be acceptable.

g. Valve shaft seals shall be of the multiple V-ring type and shall be externally adjustable and repackable without removing the bonnet or actuator from the valve under pressure. Valves utilizing O-ring seals or non-adjustable packing shall not be acceptable.

h. Valve pressure ratings shall be 175 psi through 12" and 150 psi for 14" through 72". Each valve shall be given a hydrostatic and seat test with test results being certified when required by the specifications.

i. Manual valves shall have lever or gear actuators and tee wrenches, extension stems, floorstands, etc., as indicated on the plans. All valves 6" and larger shall be equipped with gear actuators. All gearing shall be enclosed in a semi-steel housing and be suitable for running in a lubricant with seals provided on all shafts to prevent entry of dirt and water into the actuator. The actuator shaft and the quadrant shall be supported on permanently lubricated bronze bearings. Actuators shall clearly indicate valve position and an adjustable stop shall be provided to set closing torque and to provide seat adjustment to compensate for change in pressure differential or flow direction change. All exposed

nuts, bolts and washers shall be zinc plated.

j. Valves and gear actuators for buried or submerged service shall have seals or all shafts and gaskets on the valve and actuator covers to prevent the entry of water. Actuator mounting brackets for buried or submerged service shall be totally enclosed and shall have gasket seals. All exposed nuts, bolts, springs and washers shall be stainless steel.

k. Actuators shall be equipped with an operating nut to allow manual valve operation in case of supply failure.

l. All valves and actuators shall be as manufactured by DEZURIK, Pratt, Val-matic or approved equal.

m. All buried service plug valves shall have mechanical joint ends, have all exterior surfaces shop painted with two coats of Fed. Spec. TT-C-494A Asphalt Varnish with 2 inch square nut operator in a vertical position for use in a valve box. Provide nut operator stem extension for all plug valves buried deeper than 5 feet, sufficient to raise operator nut to within 3 feet of finished grade.

1. Single disc, swing check valves, 4 inch and larger, shall be used in sewage pump stations and shall be iron body, bronze-mounted, swing check, bolted cover, flanged ends, 125 psig working pressure, AWWA C508, suitable for use in a horizontal position. Flanges shall conform in dimensions and drilling to ANSI B16.1.

a. Swing check valves shall have outside weight and lever.

CONCRETE WET WELL AND VALVE VAULT

1. The Contractor shall furnish and install a water-tight, monolithic concrete or precast manhole type wet well as indicated on the drawings which is to be lined with Spectrashield and the first manhole that the forcemain from the lift station empties into is also to be lined. An on-site backup generator with an auto transfer switch shall be furnished and installed by the Contractor. Pump and related equipment shall be installed and/or mounted as shown.

2. A water-tight, concrete valve vault shall be furnished and installed to house the valves and appurtenances. Drain and backflow preventer shall be installed from the valve vault to the wet well.

3. Precast manhole sections shall conform to requirements of ASTM C478 and be water tight.

4. Contractor may offer wet well sections conforming to ASTM C76, Class IV, Wall B pipe sections if shown on the drawings.

ALUMINUM HATCH

1. Frame shall be 1/4 inch extruded aluminum with built-in neoprene cushion and with strap anchors bolted to exterior. Cover leaf shall be 1/4 inch aluminum reinforced with aluminum stiffeners as required. Stainless steel hinges shall be bolted to underside and pivot on all stainless bolts and hardware shall be used. The cover shall open to 90 degrees and lock automatically in that position. A vinyl grip handle shall be provided to release and close the cover with one hand. Covers shall be built to withstand a live load of 150 pounds per square foot, and equipped with a snap lock and removable handle. When closed, covers shall not protrude above the operating surface in which they are installed. Factory finish shall be aluminum lacquer. Surface contacting concrete shall have bituminous coating.

2. Covers shall be diamond pattern plate.

3. Hatches shall have an interior safety hatch.

a. The safety hatch shall be designed to cover the complete opening maintaining a fall through protection per OSHA Standard 1910.23 and controlled confined space entry per OSHA Standard 1910.146.

b. Doors cannot be closed unless the fall through protection has been put back in place (protecting the next worker).

c. Allows visual inspections, limited maintenance and float adjustment while safety grate is left in place.

d. Open grates create a physical barrier around the pit, protecting passing pedestrians.

e. Safety orange color promotes a visual awareness of the hazard.

f. Quality materials provide superior corrosion resistance.

g. Pump platform. Pumps can be pulled from the pit then suspended, the grating closed, and the pump set back on the grating. This allows for pump wash downs directly back into the pit to prevent EPA clean-up due to site contamination.

4. Aluminum covers shall be Bilco Type K or KD, Flygt, or approved equal.

5. When flush mounted covers are furnished, provide two wrenches for opening covers.

6. Valve vault cover shall be water tight with drain system.

7. The Contractor shall provide padlocks for new wet well and valve vault covers. The locks shall be keyed alike with a lock provided by the Owner.

503.12 Operation & Maintenance Manuals

Four (4) Operation and Maintenance Manuals shall be submitted to the Department in both hard copy and .pdf format.

Manuals shall include, at a minimum, the following:

1. Warranty Statement;
2. Pump down test from the initial start-up test;
3. Operation instructions;
4. Maintenance instructions;
5. Recommended spare parts list;
6. Lubrication schedules;
7. Structural diagrams;
8. As-built wiring diagrams;
9. Piping and Instrumentation Drawings (P&ID); and

10. Bill of materials.

503.13 Spare Parts

At the discretion of the Department, the Contractor may be required to supply one set of spare parts for each station, including, at a minimum, the following:

1. Impeller;
2. Upper seal assembly;
3. Lower seal assembly;
4. Upper bearing assembly;
5. Lower bearing assembly;
6. Wear rings; and
7. O-Rings and gaskets - two (2) sets.

503.14 Station Warranty

Warranties for the lift station and all equipment, except for the pumps, shall be three (3) years from the date of acceptance per City Maintenance Bond requirements.

Warranty for the pumps shall be five (5) years from the date of acceptance and per Section 503.06.

SECTION 504
Low Pressure Pump Stations and Appurtenances

504.01 Introduction

This Section describes, in general terms, the guidelines and requirements for the planning, design, and submittal requirements for low pressure sewer systems.

504.02 General

Low-pressure systems will only be considered in areas where sanitary sewers currently serve the surrounding areas and where conventional sanitary sewer facilities cannot be constructed.

504.03 Submittal Requirements for Approval and Construction Permit

Approval of low-pressure sewer systems will be evaluated on a case-by-case basis and will only be allowed with prior written approval from the Department.

At the discretion of the Department, a lift station may be required in lieu of a low pressure system.

When submitting for an Approval and Construction Permit, the following are required:

1. Written approval from the Department;
2. Low pressure system service area – Per Section 504.04;
3. Low pressure system justification – Per Section 501.03;
   a. 50-year life cycle analysis; and
   b. Gravity sewer alternative cost estimate.
4. Low pressure system calculations – Per manufacturer's recommendations and at a minimum the following:
   a. Calculation worksheet – Per manufacturer;
   b. Individual pump curves; and
   c. Make and model number of pumps.
5. Standard Low Pressure System Detail Sheet;
6. Identification of the person/entity responsible for the maintenance of the pumps and other components of the system that are not the responsibility of the City;
7. Homeowners Association Covenants and Restrictions, if applicable; and
8. Any other information the Division and/or Department deems relevant to review and evaluate the proposed low-pressure system.

504.04 Low Pressure System Service Area

The Applicant shall prepare a Low Pressure System Service Area Study in accordance with all the requirements in Section 202.03.

504.05 Responsibility

The City will only be responsible for the operation and maintenance of the common force main and the portion of the lateral from the common force main to, and including, the shutoff valve.

The homeowner shall be responsible for all piping, pumping equipment, and appurtenances between the building and the shutoff valve.

For low-pressure systems with multiple units, the City of Indianapolis is NOT responsible for assuring replacement equipment is compatible with the existing equipment in the system.

504.06 System Design and Layout

Due to the variability of each site, the design of low-pressure systems shall rely on sound engineering judgment and manufacturer's recommendations. The Division or Department may, if reasonably justified, make any requirement deemed necessary to assure the system performs as intended.

The minimum requirements for the design and layout of low-pressure systems shall be per the most recent version of the Standard Detail Sheets, the manufacturers' recommendations, and as follows:

1. Pipe Size

   Pipe size shall be per pump manufacturer's recommendations with a minimum size of two (2) inches for the common force main and one and one-quarter (1-1/4) inches between the grinder pump and the common force main. The Engineer shall assure adequate cleansing velocities in the common force main.

2. Overall System Design/Layout

   The design shall be as follows:

   a. Sufficient to achieve a cleansing velocity of two (2) feet per second in the common force main; and
   b. Without any "loops" or parallel pumping segments in the system.

3. Cleanouts

   Cleanouts shall be per pump manufacturers recommendations but at a minimum the following locations:

   a. At the terminal end of each common force main;
   b. When two (2) or more force mains are connected; and
   c. Every 1,000 feet.

4. Flushing Stations

   Flushing stations shall be incorporated into the system.

5. Air Relief Valves

   Air relief valves shall be installed at the following locations:

   a. All high points in the system; and
   b. At intervals of 2,000 feet on all horizontal runs lacking a clearly defined high point.

6. Lateral Assembly Installation

   A lateral assembly installation shall be installed on each service line.

7. Other requirements as deemed necessary.

504.07 Maximum Connections to Grinder Pump Units

No more than one (1) building will be permitted to connect to a Grinder Pump Unit.

Common Grinder Pumps for one (1) building with multiple residential units are also prohibited, except for the following:

1. Apartment buildings (only one apartment building per grinder pump unit); and
2. Condominiums where different floors have different owners (only one building per grinder pump unit).

The intent is to have individual residential units be served by individual Grinder Pump Units.

Industrial facilities will be handled on a case-by-case basis.

504.08 Grinder Pump Types

To assure all the Grinder Pump Units are compatible, all units shall be the same Make, Model Number, and have the same pump performance characteristics, unless justified.

Replacement units shall be the same make and model as was originally approved by the Division.

Pump specifications and pump replacement requirements shall be part of the Homeowners Association (HOA) Covenants and Restrictions if a HOA is planned.

The type of pumps and allowable applications are as follows:

1. Positive Displacement Pumps

   May be used in all low pressure system applications.

2. Semi-Positive Displacement Pumps

   May be used in all low pressure system applications.

3. Centrifugal Pumps

   May only be used if the number of units is ten (10) or less and the Total Dynamic Head is less than forty (40) feet.

The Engineer and manufacturer are responsible for assuring the system will operate as intended.

504.09 Grinder Pump Equipment

Simplex or duplex grinder pumps may be used for single dwelling units. For uses other than single dwelling units, the Engineer shall determine which is appropriate.

General equipment requirements are as follows:

1. Grinder Pump Station

   The grinder pump stations shall be a complete package consisting of all equipment and appurtenances required for a fully operable pumping system. Pump level controls, starter, alarm, piping, fittings, valves, and all accessories shall be part of a factory fabricated package so that after burying the wet well, the field connection of the gravity lateral, discharge line and electrical service line to the control box will complete the installation.

2. Manufacturer

   Each grinder pump station shall be manufactured and assembled by a single manufacturer.

3. Pumps

   The pumps shall be capable of macerating all material in normal domestic and commercial sewage, including reasonable amounts of foreign objects such a wood, plastic, glass, rubber, disposable diapers and the like to a fine slurry that will pass freely through the pump and one and one-quarter (1-1/4) inch discharge pipe.

4. Electrical Motor and Level Controls

   Electrical and level controls shall be provided by the pump manufacturer. All controls shall be mounted so they can be cleaned or replaced without disturbing the pump or piping.

5. Control Panels

   The control panels and all associated components on each standard unit shall be U.L. Approved and installed per manufacturer's recommendations. All equipment associated with each unit shall meet the current requirements of all applicable Federal, State, and Local electrical codes.

   An Electrical Permit issued by DMD or the City of Westfield is required for each grinder pump unit.

The Engineer and manufacturer are responsible for assuring the equipment is designed properly and will operate in a safe manner.

CHAPTER 600

TESTING

SECTION 601
General

601.01 Introduction

This Section provides the testing requirements common to all sanitary sewer facilities.

For testing requirements specific to sanitary sewers refer to Section 602.

For testing requirements specific to force mains refer to Section 603.

For testing requirements specific to manholes refer to Section 604.

For testing requirements specific to lift stations refer to Section 605.

601.02 General Testing Requirements

All testing shall be performed under the observation of the RPR. It is the Contractor's responsibility to schedule the testing.

Test results obtained in the absence of the Division's RPR or Department will not be accepted.

The Contractor shall be responsible for providing all testing equipment at no cost to the City.

All pressure gages used shall be calibrated within one (1) year of use for any test. Calibration papers and test date information shall be made available at the request of the RPR, Division, or Department.

The City of Indianapolis will not assume any liability for the actions of the Owner, Contractor, or their agent(s), in the performance of the required tests.

SECTION 602
Gravity Sanitary Sewer Testing Requirements

602.01 Introduction

This Section provides the testing requirements specific to gravity sanitary sewers.

For testing requirements specific to force mains refer to Section 603.

For testing requirements specific to manholes refer to Section 604.

For testing requirements specific to lift stations refer to Section 605.

For testing requirements common to all sanitary sewer facilities refer to Section 601.

602.02 General Requirements

All sanitary sewers twenty-four (24) inches and less shall be air tested by means of a low pressure air test per Section 602.03. All sewers larger than twenty-four (24) inches shall be joint tested per Section 602.04.

All sanitary sewers constructed of flexible pipe (PVC and Centrifugally Cast Fiberglass Reinforced Polymer Mortar) shall be tested for deflection by means of a mandrel test per Section 602.06.

602.03 Low Pressure Air Test

All sewers twenty-four (24) inches and less shall be tested by means of a low-pressure air test to detect damaged piping and/or improper jointing. Testing shall be done per ASTM F 1417 for flexible and semi-rigid pipe and ASTM C 924 for RCP. The use of the low pressure air test for flexible and semi-rigid pipe larger that twenty-four (24) inches will be evaluated on a case-by-case basis.

The Contractor is responsible for assuring the test is conducted in a safe manner and all applicable safety procedures are followed.

Do not enter, or allow anyone to enter, the manhole during testing.

The low pressure air test shall be as follows:

1. Waiting Period

   The air test may be done immediately after final backfill is placed in the trench.

2. Equipment

   At a minimum, the following shall be provided:

   a. Mechanical or pneumatic plugs;
   b. Air control panel;
   c. Shut-off valve, pressure regulative valve, pressure relief valve, and input pressure gauge. The pressure regulator or relief valve shall be set no higher than 9 psig (6 psig for RCP) to avoid over pressurization;
   d. Continuous monitoring pressure gauge having a range of 0 to at least 10 psi. The gauge shall be no less than four (4) inches in diameter with minimum divisions of 0.10 psi and an accuracy of ± 0.04 psi;
   e. To reduce the potential for sewer line over-pressurization, two (2) separate hoses shall be used to:
      i. Connect the control panel to the sealed line for introducing low pressure air; and
      ii. Constantly monitor air pressure buildup in the line.

If pneumatic plugs are utilized, a separate hose shall be required to inflate the pneumatic plugs.

3. Testing Procedures

   The Test Data Sheet per Appendix C shall be used when conducting the air test.

   The procedures for the low pressure air test are as follows:

   a. Plug Installation

      After a segment of pipe has been backfilled to final grade, securely place and brace suitable test plugs in the ends of the sewer segment and in all lateral stubs included in the test.

      All plugs shall be securely restrained and braced prior to and during the test.

   b. Line Pressurization

      Add air slowly to the test section until the pressure inside the pipe reaches 4.0 psig PLUS the necessary adjustment for groundwater (Maximum 2.0 psig adjustment for a 6.0 psig maximum total).

      The air pressure adjustment for groundwater shall be determined by the following:

      Adjustment = Depth of Groundwater x 0.43

      where

      Adjustment = Adjustment added to the starting pressure of the low-pressure air test, psig. **The maximum adjustment shall be 2.0 psig.**

      Depth of Groundwater = As measured above the top of pipe, feet.

      0.43 = Conversion factor

      Do not exceed 6.0 psig at any time during the low-pressure air test.

      The groundwater monitoring wells installed per Section 403.09 shall be used to determine the depth of groundwater. If more than one well was installed, take the average depth of the nearest downstream and nearest upstream monitoring locations. If the monitoring wells were not installed, the adjustment shall be 2.0 psig.

   c. Pressure Stabilization

      After a constant pressure of 4.0 psig (PLUS the necessary adjustment for groundwater) is reached, the air supply shall be throttled to maintain that internal pressure for at least two (2) minutes. This time permits the temperature of the entering air to equalize with the temperature of the pipe wall.

   d. Timing Pressure Loss

      When temperatures have been equalized and the pressure stabilized at 4.0 psig (PLUS the necessary adjustment for groundwater), the air hose from the control panel to the air supply shall be shut off or disconnected

10505 N. College Avenue
Indianapolis, Indiana 46280
weihe.net
317 | 846 - 6611
800 | 452 - 6408
317 | 843 - 0546 *fax*
ALLAN H. WEIHE, P.E., L.S. - FOUNDER

WEIHE ENGINEERS
Land Surveying | Civil Engineering
Landscape Architecture

PROJECT NO.: W15.0316
DWG NAME: w150316-C904 SS spec.dwg
DESIGNED BY: RLW
DRAWN BY: RLW
CHECKED BY: BJS
DATE: 01.29.2016

REVISIONS AND ISSUES	DATE	BY
SUBMITTED FOR COUNTY SURVEYOR REVIEW	10.16.2015	BJS
ISSUED FOR TAC REVIEW	01.29.2016	BJS

STEVEN SCOTT RUCKER REGISTERED PE11300279 STATE OF INDIANA PROFESSIONAL ENGINEER
NOT FOR CONSTRUCTION APPROVAL PENDING

STEVEN SCOTT RUCKER P.E. 11300279

PREPARED FOR:
Culver's of WESTFIELD
17651 SUN PARK DRIVE, WESTFIELD, IN 46074

CITIZENS - SANITARY SEWER SPECIFICATIONS
Part of SW/4, Section 36, Township 19 North, Range 3 East, Washington Township, Hamilton County, Indiana

SHEET NO.
C909

PROJECT NO.
W15.0316

LOCATION: H:\2015\w150316\Engineering\design\conset\w150316-C904 SS spec.dwg
LAYOUT: C909
DATE/TIME: January 28, 2016 – 2:48pm
PLOTTED BY: schoeffb

The continuous monitoring pressure gauge shall then be observed while the pressure is decreased to no less than 3.5 psig (PLUS the necessary adjustment for groundwater). At this reading, or any convenient observed pressure reading between 3.5 psig and 4.0 psig (PLUS the necessary adjustment for groundwater), timing shall begin.

A timed pressure drop of either 1.0 psig or 0.5 psig shall be used. The RPR shall determine the appropriate pressure drop. The allowable time shall be predetermined using either Table 600.01 or 600.02, depending on which pressure drop is used.

When testing RCP sewers, a 1.0 psig pressure drop shall be used.

e. Time adjustment for laterals

No time adjustment for lateral lengths will be allowed.

f. Determination of Line Acceptance

If the time shown for the designated pipe size and length elapses before the pressure drops (1.0 or 0.5 psig), the section of pipe being tested shall have passed the test.

The test may be discontinued once the prescribed time has elapsed even though the pressure drop has not occurred.

g. Determination of Line Failure

If the pressure drops before the appropriate time has elapsed, the air loss rate shall be considered excessive and the section of pipe being tested shall have failed the test.

The Contractor shall be required to uncover, replace, or repair any section of sewer not passing the test. The method of repair shall be per approval of the Division and/or Department. Grouting is not an acceptable method of repair.

602.04 Joint Test

All sewers greater than twenty-four (24) inches shall be joint tested using air or water under low pressure. All joints shall be tested. Testing procedures shall be per ASTM C 1103 and as follows:

1. Waiting Period

The joint test may be done immediately after final backfill is placed.

2. Equipment

Equipment used shall be made specifically for joint testing of pipelines.

3. Testing Procedures

a. Joint Test Apparatus Installation

i. Clean the joint and interior joint surfaces.

ii. Move the joint test apparatus into the sewer line to the joint to be tested and position it over the joint. Make sure the end element sealing tubes straddle both sides of the joint and the hoses are attached. For the water test, the bleed-off petcock must be located at top dead center.

iii. Inflate end element sealing tubes with air in accordance with equipment and manufacturer's instructions.

b. Joint Air Test

i. Pressurize the void volume with air to 3.5 psi PLUS the necessary adjustment for groundwater above the top of pipe (maximum 2.0 psi adjustment for a 5.5 psi maximum total). Allow the air pressure and temperature to stabilize before shutting off the air supply. Start the timing of the test.

The air pressure adjustment shall be per Section 602.03.3.b.

ii. Measure the pressure drop for five (5) seconds.

iii. After the joint test is completed, exhaust void volume, then exhaust end element tubes prior to removal of the testing apparatus.

c. Joint Water Test

i. Introduce water into the void volume until water flows evenly from open petcock. Close the petcock and pressurize with water to 3.5 psi PLUS the necessary adjustment for groundwater above the top of pipe (maximum 2.0 psi adjustment for a 5.5 psi maximum total). Shut off the water supply and start test timing.

ii. Measure the pressure drop for five (5) seconds.

iii. After the joint test is completed, exhaust end element tubes which will automatically release the water from the void volume, prior to removal of the testing apparatus.

d. Determination of Line Acceptance

If the pressure holds or drops less than one (1) psi for the five (5) second test time, the joint shall have passed the test.

e. Determination of Line Failure

If the pressure drops one (1) psi or more during the five (5) second test time, the joint shall have failed the test.

If the joint fails, the Contractor shall repair and retest as necessary. The method of repair shall be per approval of the Division and/or Department. Grouting is not an acceptable method of repair.

602.05 Water Infiltration Test

All gravity sanitary sewers shall be watertight and free from leakage.

The rate of infiltration into the sanitary sewer system between any two adjacent manholes or the entire system shall not be in excess of 100 gallons per inch of pipe diameter per mile per day (100 gpd/in-dia/mi).

The Contractor may be required to conduct a weir test to determine if the 100 gal/in/mi/day maximum allowable infiltration rate is being exceeded.

The weir test will be required if water is observed in the sewer at any time during the acceptance process. The weir test will be at the sole discretion of the RPR, Division, or Department.

The Contractor shall be required to repair all visible leaks, even if the allowable infiltration requirements are met. The method of repair shall be per the approval of the Division and/or Department.

Grouting of the joint or crack to repair the leakage shall not be permitted. If the defective portion of the sanitary sewer cannot be located, the Contractor shall remove and reconstruct as much of the work as necessary to obtain a system that passes infiltration requirements.

602.06 Mandrel Deflection Test for Flexible Pipe

All sanitary sewers using flexible pipe shall be tested for deflection by means of a go/no-go mandrel gage or other methods as approved by the Department.

The mandrel deflection test shall be as follows:

1. Waiting Period

The mandrel deflection test shall be done no sooner than thirty (30) days after final backfill has been placed.

2. Equipment

Mandrels shall be constructed with nine (9) or ten (10) arms. Mandrels with fewer than nine (9) arms are not allowed.

The Length (L) shall be measured between points of contact on the mandrel arm.

The Diameter (D) mandrel dimension shall carry a tolerance of ± 0.01 inches.

3. Allowable Deflection

The allowable deflection shall be based on the pipe type as follows:

a. PVC Pipe

The allowable deflection for PVC pipe shall be 5% of the base inside diameter as determined by ASTM D 3034 and F 679. The dimensions are as follows:

DIMENSIONS FOR MANDREL			
Nominal Pipe Diameter, inches	Length (L) of Mandrel, inches	Base ID of Pipe, inches	Diameter (D)[1] for Deflection of 5%, inches
8	8.0	7.665	7.28
10	10.0	9.563	9.08
12	10.0	11.361	10.79
15	12.0	13.898	13.20

[1] – The diameter is based on SDR 35 pipe thickness, if thicker pipe is used, the diameter may be adjusted accordingly.

b. Closed Profile PVC

The allowable deflection for Closed Profile PVC shall be 5% based on the inside diameter as determined on a case-by-case evaluation of the pipe design.

c. Centrifugally Cast Fiberglass Reinforced Polymer Mortar Pipe

i. Polyester Resin

The allowable deflection for Centrifugally Cast Fiberglass Reinforced Polymer Mortar pipe made with polyester resin shall be 4% based on the inside diameter as determined on a case-by-case evaluation of the pipe design.

ii. Vinyl Ester Resin

The allowable deflection for Centrifugally Cast Fiberglass Reinforced Polymer Mortar pipe made with vinyl ester resin shall be 3% based on the inside diameter as determined on a case-by-case evaluation of the pipe design.

The Contractor shall provide proving rings to check the mandrel. The proving rings shall be clearly labeled with the dimensions and ASTM Standard.

4. Testing Procedure

a. The mandrel shall be hand pulled through all sections of the sewer lines.

b. Determination of Line Acceptance

If the mandrel can be hand pulled through the entire length of the section tested, the section shall have passed the test.

c. Determination of Line Failure

If the mandrel cannot be hand pulled through the entire length of the section tested, the section shall have failed the test.

The Contractor shall be required to uncover, replace, or repair any section of sewer not passing the mandrel test.

602.07 Air Test or Mandrel Test Failures

To determine the location of any failure, a visual inspection by means of closed circuit televising (CCTV) is recommended when the air or mandrel tests fail.

The pipe shall be thoroughly cleaned before televising.

If a CCTV inspection was conducted, then a digital copy of the inspection shall be submitted to the Division for review.

602.08 Televising

1. All sections of sanitary sewers shall be cleaned and flooded prior to insertion of televising equipment to be inspected by closed circuit television.

2. All unacceptable conditions found during television inspection must be corrected by the Contractor and re-televised.

3. Unacceptable conditions or conditions that adversely affect the ability of the system to function as designed or to be properly maintained and may include, but not limited to, the following: (Televising while cleaning shall not be permitted)

a. Protruding taps
b. Cracked or faulty pip
c. Misaligned or deformed pipe
d. Debris in line
e. Infiltration/Exfiltration
f. Excessive gaps or joints
g. Bellies or sags with a depth greater than or equal to 10% (or a maximum of 1-1/2 inches of pipe diameter and/or a length greater than 25 feet.

SECTION 603
Force Main Testing Requirements

603.01 Introduction

This Section provides the testing requirements for force mains and low pressure systems.

For testing requirements specific to sanitary sewers, refer to Section 602.

For testing requirements specific to manholes refer to Section 604.

For testing requirements specific to lift stations refer to Section 605.

For testing requirements common to all sanitary sewer facilities refer to Section 601.

603.02 General Requirements

All force mains for lift stations and common force mains in low pressure systems shall be tested for leakage by a Hydrostatic Leak Test per Section 603.03.

603.03 Hydrostatic Leak Test

The hydrostatic leak test shall be done in accordance with AWWA standards based on force main material, in accordance with ASTM E 1003, and as follows:

1. Waiting Period

The hydrostatic test may be done immediately after final backfill is placed and the air and/or vacuum release valves are installed.

2. Equipment

At a minimum, the following shall be provided:

a. Hydrostatic Test Pump (jockey pump).

b. Continuous monitoring pressure gage having a range of 0 – 150 psi graduated in 1 psi increments. The gauge shall be no less than four (4) inches in diameter.

c. Pipe plugs and/or caps. The plugs/caps shall be equipped with a minimum of two (2) openings for filling/draining the force main and for bleeding air from the line.

d. Calibrated/graduated container to measure the quantity of water required to be added during the hydrostatic test to maintain the test pressure.

3. Testing Procedures

The procedures for the hydrostatic test are as follows:

a. Plug/cap installation

After the force main has been backfilled to final grade, securely plug and/or bulkhead the ends being tested. Thrust blocking restraints shall be installed at each bulkhead in accordance with the bulkhead manufacturer's requirements.

b. Air and/or Vacuum Release Valves

All air and/or vacuum release valves shall be installed and in normal (open) in-service position during the test.

c. Line Pressurization

i. The force main shall be slowly pressurized with water to 1.5 times the working pressure, or 100 psi, whichever is greater.

ii. Trapped air shall be expelled through high point bleed off valves as the force main is being filled.

iii. When the pressure has been reached, the test pump shall be shut off.

iv. After the force main has been pressurized, measure the pressure drop for two (2) hours.

d. Determination of Force Main Acceptance

If no pressure drop occurs within the two (2) hour test time, the force main shall have passed the test.

e. Determination of Force Main Failure

If a pressure drop occurs within the two (2) hour test time, the force main shall have failed the test.

Contractor shall repair any defects and retest, or retest per the Alternate Testing Procedure.

4. Alternate Testing Procedure

a. Plug/Cap Installation

Same as the above Testing Procedures

b. Line Pressurization

The force main shall be slowly pressurized with water to a test pressure 1.5 times the working pressure or 100 psi, whichever is greater. Water shall be added to maintain the test pressure for two (2) hours.

c. Determination of Force Main Acceptance

The amount of water added during the line pressurization shall be measured. The allowable leakage, in gallons per hour, shall be calculated as follows:

i. For PVC Pipe

$$L = (ND(P)^{1/2}) / 7400$$

ii. For Ductile Iron Pipe

$$L = (SD(P)^{1/2}) / 133,200$$

where:

L = allowable leakage, gph

N = number of joints in the pipeline tested

S = length of pipe tested, feet

D = nominal diameter of the pipe, in.

P = average test pressure (psi)

If the amount of water added is less than the allowable leakage, the force main shall have passed the test.

d. Determination of Force Main Failure

If the amount of water added is greater than the allowable leakage, the force main shall have failed the test.

The Contractor shall be required to uncover, replace, or repair the force main and/or air release valve and retest.

SECTION 604
Manhole Testing Requirements

604.01 Introduction

This Section provides the testing requirements for manholes.

For testing requirements specific to sanitary sewers refer to Section 602.

For testing requirements specific to force mains refer to Section 603.

For testing requirements specific to lift stations refer to Section 605.

For testing requirements common to all sanitary sewer facilities refer to Section 601.

604.02 General Requirements

All manholes shall be tested for infiltration by means of a negative air (vacuum) pressure test per Section 604.04.

All internal chimney seals shall be tested per Section 604.05.

604.03 Leakage

All manholes shall be watertight and free from leakage.

Each manhole shall be visually inspected for leakage by the Division's RPR after assembly and backfilling.

If the manhole shows signs of leakage, the manhole shall be repaired to the satisfaction of the Division and reinspected.

604.04 Negative Air (Vacuum) Test

All manholes shall be tested for infiltration by means of a Negative Air (Vacuum) Pressure Test. Testing shall be done per ASTM C 1244.

All joints between the top of casting to the bottom of the manhole base shall be included in the test.

The vacuum test shall be as follows:

1. Waiting Period

If possible, each manhole shall be tested immediately after assembly and prior to backfilling. If the test is done after backfilling, the Contractor shall be responsible for re-excavation to locate and correct any leaks that have been identified.

The vacuum test shall be done BEFORE the chimney seal is installed and tested.

2. Equipment

Equipment used shall be made specifically for vacuum testing of manholes.

3. Testing Procedures

a. Plug Installation

All pipes entering the manhole shall be temporarily plugged, taking care to securely brace the pipes and plugs to prevent them from being drawn into the manhole.

b. Test Head Installation

The test head shall be placed at the top of the manhole casting in accordance with the manufacturer's recommendations.

c. Air Evacuation

A vacuum of ten (10) inches of mercury shall be drawn on the manhole, the valve on the vacuum line of the test head closed, and the vacuum pump shut off.

d. Timing Pressure Rise

The time for the vacuum reading to drop from ten (10) inches to nine (9) inches of mercury shall be measured. The allowable time shall be determined by using the following:

Minimum Test Times			
Manhole Depth, feet	Manhole Diameter, in		
	48	60	72
	Time, seconds		
8	20	26	33
10	25	33	41
12	30	39	49
14	35	46	57
16	40	52	67
18	45	59	73
20	50	65	81
22	55	72	89
24	59	78	97
26	64	85	105
28	69	91	113
30	74	98	121

e. Determination of Manhole Acceptance

If the time shown for the designated manhole depth and diameter elapses before the vacuum reading drops one (1) inch, the manhole shall have passed the test.

f. Determination of Manhole Failure

If the vacuum reading drops more than one (1) inch before the appropriate time has elapsed, the manhole shall have failed the test.

The Contractor shall be required to uncover, replace, or repair any or all sections of the manhole and retest.

604.05 Chimney Seal Leakage Test

All internal chimney seals shall be tested using a leakage test.

The leakage test shall be as follows:

1. Waiting Period

The leakage test shall be done AFTER the manhole has passed the vacuum test.

2. Testing Procedures

a. Install the chimney seal and only the bottom expansion band per manufacturer's recommendation. Fully tighten the bottom band. Do not install the top expansion band.

b. Pulling the top of the seal away from the manhole frame, pour one (1) gallon of water behind the seal.

c. Observe the bottom seal for a minimum of one (1) minute for leakage.

d. Drain the water by folding the top of the chimney seal down.

e. If the chimney seal passes the test, install the top expansion band per manufacturer's recommendation.

3. Determination of Chimney Seal Acceptance

If the bottom expansion band holds water without leaking, the chimney seal will have passed the test.

4. Determination of Chimney Seal Failure

If the bottom expansion band has any leakage during the test time, the chimney seal will have failed the test.

The Contractor shall be required to remove, replace, or reposition the bottom expansion band and retest.

SECTION 605
Lift Station Testing

605.01 Introduction

This Section provides the testing requirements for lift stations.

For testing requirements specific to sanitary sewers refer to Section 602.

For testing requirements specific to force mains refer to Section 603.

For testing requirements specific to manholes refer to Section 604.

For testing requirements common to all sanitary sewer facilities refer to Section 601.

605.02 General Requirements

The force main and all gravity sanitary sewers constructed as part of the project shall have passed all required tests prior to the startup and final acceptance of the lift station.

605.03 Wet Well Leakage Testing

All wet wells shall be watertight and free from leakage.

The wet well shall be visually inspected for leakage by the Division's RPR after assembly and backfilling.

All dewatering activities shall be ceased a minimum of eight (8) hours prior to the leak testing.

If the wet well shows signs of leakage, it shall be repaired to the satisfaction of the Division and reinspected.

605.04 Lift Station Testing

All equipment testing shall be observed by the Department and the RPR during the lift station's final inspection.

Partial testing will not accepted. The testing must be done on the complete lift station.

It is not the RPR's, Division's, or Department's responsibility to engage in ANY activity or supply ANY equipment to test and/or accept the lift station.

The Contractor shall provide the clean water to run the pumps and perform all tests.

The startup and final inspection shall be as follows:

1. Waiting Period

The waiting period shall be after BOTH of the following:

a. AFTER the force main, gravity sewers and manholes constructed as part of the project have passed all required tests contained in Sections 602, 603, and/or 604.

b. After ALL equipment has been installed, been determined to be in working order by the Contractor and manufacturer, and been previously tested by the manufacturer.

2. Equipment

The Contractor or manufacturer shall provide all necessary equipment to safely complete all the tasks necessary to test and accept the lift station.

3. Testing Procedures

A lift station checklist provided by the Department shall be completed during the start-up and final inspection.

The test shall verify all equipment performs in accordance with the design and the requirements of this Manual. Procedures for each component shall be determined by the Department at the time of startup. At a minimum, the following shall be tested:

a. Pumping rate for all pumps in gpm;

b. Communications equipment;

c. Programmable Logic Controller;

d. All electronic equipment;

e. All mechanical equipment;

f. All instrumentation and control equipment;

g. All programming;

h. Incoming power;

i. The overall operating condition of the lift station; and

j. Any other test the Department deems necessary.

4. Calibration

All measuring equipment supplied for the lift station shall be calibrated prior to acceptance. Calibration test results shall be made available upon request.

The measuring equipment shall include at a minimum the following:

a. Level Transducers;

b. Flow Meters;

c. Gauges; and

d. Other equipment as deemed necessary by the Department.

5. Determination of Lift Station Acceptance

If the station performs to the satisfaction of the Department, as designed, and per the requirements of this Manual, the lift station shall have passed the test.

6. Determination of Lift Station Failure

If the station does not perform to the satisfaction of the Department, as designed, and per the requirements of this Manual, the lift station shall have failed the test.

The Contractor shall be required to correct all deficiencies and retest.

TABLE 600.01

MINIMUM SPECIFIED TIME REQUIRED FOR A 1.0 PSIG PRESSURE DROP FOR SIZE AND LENGTH OF PIPE FOR ALL PIPE

1 Pipe Diameter (in)	2 Minimum Time (min:sec)	3 Length for Minimum time (ft)	4 Time for Longer Length	Specification Time for Length (L) Shown (min:sec)								
				100 ft	150 ft	200 ft	250 ft	300 ft	350 ft	400 ft	450 ft	500 ft
4	3:46	597	.380 L	3:46	3:46	3:46	3:46	3:46	3:46	3:46		
6	5:40	398	.854 L	5:40	5:40	5:40	5:40	5:40	5:40	5:42		
8	7:34	298	1.520 L	7:34	7:34	7:34	7:34	7:36	8:52	10:08		
10	9:26	239	2.374 L	9:26	9:26	9:26	9:53	11:52	13:51	15:49		
12	11:20	199	3.418 L	11:20	11:20	11:24	14:15	17:05	19:56	22:47		
15	14:10	159	5.342 L	14:10	14:10	17:48	22:15	26:42	31:09	35:36	40:04	44:31
18	17:00	133	7.692 L	17:00	19:13	25:38	32:03	38:27	44:52	51:16	57:41	64:06
21	19:50	114	10.470 L	19:50	26:10	34:54	43:37	52:21	61:00	69:48	78:31	87:15
24	22:40	99	13.674 L	22:47	34:11	45:34	56:58	68:22	79:46	91:10	102:33	113:57
27[1]	25:30	88	17.306 L	28:51	43:16	57:41	72:07	86:32	100:57	115:57	129:48	144:13
30[1]	28:20	80	21.366 L	35:37	53:25	71:13	89:02	106:50	124:38	142:26	160:15	178:03
33[1]	31:10	72	25.852 L	43:05	64:38	86:10	107:43	129:16	150:43	172:21	193:53	215:26
36[1]	34:00	66	30.768 L	51:17	76:55	102:34	128:12	153:50	179:29	205:07	230:46	256:40
Reinforced Concrete Pipe (RCP)												
24	3:6	100	0.036L	3:36	5:24	7:12	9:00	10:48	12:36	14:24	16:12	18:00

[1] - Per Section 602.03, the low pressure air test for these pipe diameters can only be conducted with prior approval of the Department.

TABLE 600.02

MINIMUM SPECIFIED TIME REQUIRED FOR A 0.5 PSIG PRESSURE DROP FOR SIZE AND LENGTH OF PIPE FOR FLEXIBLE AND SEMI-RIGID PIPE

1 Pipe Diameter (in)	2 Minimum Time (min:sec)	3 Length for Minimum time (ft)	4 Time for Longer Length	Specification Time for Length (L) Shown (min:sec)								
				100 ft	150 ft	200 ft	250 ft	300 ft	350 ft	400 ft	450 ft	500 ft
4	1:53	597	0.190 L	1:53	1:53	1:53	1:53	1:53	1:53	1:53		
6	2:50	398	0.427 L	2:50	2:50	2:50	2:50	2:50	2:50	2:51		
8	3:47	298	0.760 L	3:47	3:47	3:47	3:47	3:48	4:26	5:04		
10	4:43	239	1.187 L	4:43	4:43	4:43	4:57	5:56	6:55	7:54		
12	5:40	199	1.709 L	5:40	5:40	5:42	7:08	8:33	9:58	11:24		
15	7:05	159	2.671 L	7:05	7:05	8:54	11:08	13:21	15:35	17:48	20:02	22:16
18	8:30	133	3.846 L	8:30	9:37	12:49	16:01	19:14	22:26	25:38	28:51	32:03
21	9:55	114	5.235 L	9:55	13:05	17:27	21:49	26:11	30:32	34:54	39:16	43:38
24	11:20	99	6.837 L	11:24	17:57	22:48	28:30	34:11	39:53	45:35	51:17	56:59
27[1]	12:45	88	8.653 L	14:25	21:38	28:51	36:04	43:16	50:30	57:42	64:54	72:06
30[1]	14:10	80	10.683 L	17:48	26:43	35:37	44:31	53:25	62:19	71:13	80:07	89:01
33[1]	15:35	72	12.926 L	21:33	32:19	43:56	53:52	64:38	75:24	86:10	96:57	107:43
36[1]	17:00	66	15.384 L	25:39	38:28	51:17	64:06	76:55	89:44	102:34	115:23	128:12

[1] - Per Section 602.03, the low pressure air test for these pipe diameters can only be conducted with prior approval of the Department.

10505 N. College Avenue
Indianapolis, Indiana 46280
weihe.net
317 | 846 - 6611
800 | 452 - 6408
317 | 843 - 0546 *fax*
ALLAN H. WEIHE, P.E., L.S. - FOUNDER

WEIHE ENGINEERS
Land Surveying | Civil Engineering
Landscape Architecture

PROJECT NO.: W15.0316
DWG NAME: w150316-C904 SS spec.dwg
DESIGNED BY: RLW
DRAWN BY: RLW
CHECKED BY: BJS
DATE: 01.29.2016

REVISIONS AND ISSUES	DATE	BY
SUBMITTED FOR COUNTY SURVEYOR REVIEW	10.16.2015	BJS
ISSUED FOR TAC REVIEW	01.29.2016	BJS

STEVEN SCOTT RUCKER REGISTERED PE11300279 STATE OF INDIANA PROFESSIONAL ENGINEER
APPROVAL PENDING NOT FOR CONSTRUCTION

STEVEN SCOTT RUCKER P.E. 11300279

PREPARED FOR: Culver's of WESTFIELD
17651 SUN PARK DRIVE, WESTFIELD, IN 46074

CITIZENS - SANITARY SEWER SPECIFICATIONS
Part of SW/4, Section 36, Township 19 North, Range 3 East, Washington Township, Hamilton County, Indiana

SHEET NO. C910

PROJECT NO. W15.0316

LOCATION: H:\2015\w150316\Engineering\design\conset\w150316-C904 SS spec.dwg
LAYOUT: C910
DATE/TIME: January 28, 2016 – 2:48pm
PLOTTED BY: schoeffb

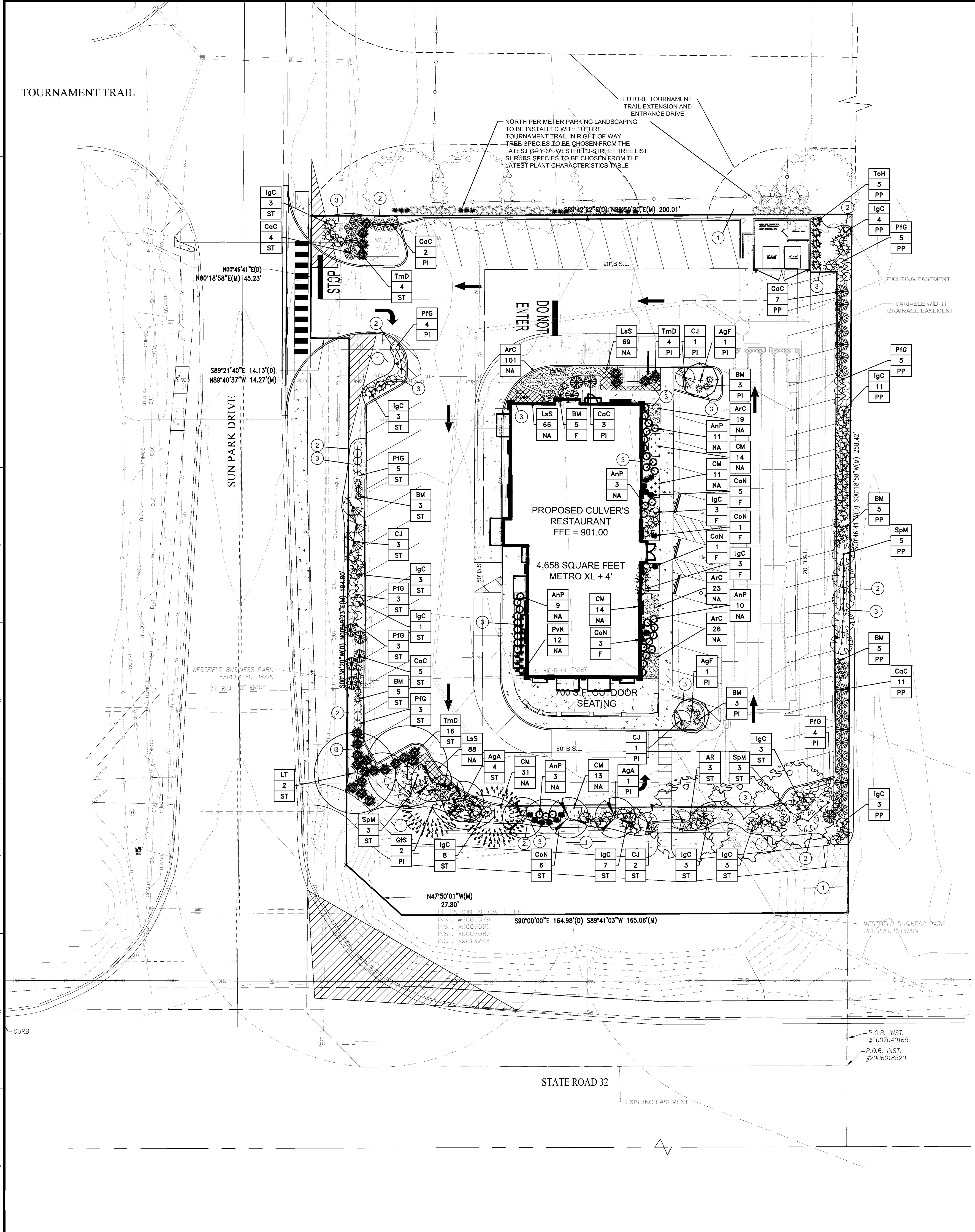

LANDSCAPE PLAN NOTES

1. SOD- ALL SOD SHALL BE CERTIFIED GRADE CULTIVATED GRASS SOD: OF "ADVENTURE BLEND" TURF TYPE TALL FESCUE (BY GENERAL CONTRACTOR)
2. LANDSCAPE BED EDGE (TYP.)
3. MULCH

WESTFIELD REQUIRED NOTES

1. ALL STREET TREES ARE TO MATCH THE CURRENT CITY OF WESTFIELD MASTER TREE LIST.
2. STREET TREES SHALL NOT BE WITHIN 4 FEET OF ANY PAVEMENT.
3. THERE SHALL BE NO TREES WITHIN 10 FEET OF ANY STORM SEWER INCLUDING SSD.

LEGEND

CLEAR SIGHT TRIANGLE

GtS — SYMBOL
1 — QUANTITY
ST — PLANTING AREA

F = FOUNDATION PLANTINGS
PI = INTERIOR PARKING LOT
PP = PERIMETER PARKING LOT
NA = NOT REQUIRED BY ZONING
ST = STREET FRONTAGE PLANTINGS

GENERAL NOTES

1. IN CASE OF DISCREPANCIES BETWEEN THE PLAN AND THE PLANT LIST, THE PLAN SHALL DICTATE. IF IN QUESTION, CONTACT THE LANDSCAPE DESIGNER.
2. ALL SHRUBS PLANTING AREAS TO BE COVERED WITH 4" THICK LAYER OF SHREDDED HARDWOOD BARK MULCH. ALL GROUND COVER BEDS SHALL BE COVERED WITH 1" SHREDDED HARDWOOD BARK MULCH. BARK MULCH SHALL BE APPROVED BY LANDSCAPE DESIGNER AND SHALL BE UNIFORM IN TEXTURE AND COLOR AND SHALL BE OBTAINED FROM SAWMILL OR LUMBERING OPERATIONS. NO UTILITY MULCH OR PROCESSED TREE TRIMMINGS WILL BE ALLOWED.
3. AN APPROVED PRE-EMERGENT HERBICIDE SHALL BE APPLIED IN ALL PLANTING AND GROUND COVER BEDS AT RATES SPECIFIED BY MANUFACTURER FOR EACH VARIETY OF PLANT.
4. FINAL PLACEMENT OF PLANT MATERIALS, ETC. SHALL BE APPROVED BY LANDSCAPE DESIGNER BEFORE PLANTING OPERATIONS ARE TO PROCEED. ALL TREE LOCATIONS SHALL BE MARKED WITH A WOODED STAKE INDICATING VARIETY AND SIZE OF TREE. ALL GROUND COVER AND MULCH BED LINES SHALL BE MARKED BY A HIGHLY VISIBLE PAINT LINE WITH OCCASIONAL WOOD STAKES FOR REFERENCE. ALL STAKES SHALL BE REMOVED FOLLOWING PLANTINGS OPERATIONS. LANDSCAPE DESIGNER RESERVES THE RIGHT TO ADJUST PLANT LOCATIONS ON SITE.
5. NO SUBSTITUTIONS OF PLANT MATERIAL WILL BE ALLOWED. IF PLANTS ARE SHOWN TO BE UNAVAILABLE, THE CONTRACTOR SHALL NOTIFY LANDSCAPE DESIGNER PRIOR TO BID DATE IN WRITING. ALL PLANTS SHALL BE INSPECTED AND TAGGED WITH PROJECT IDENTIFICATION AT NURSERY OR CONTRACTORS OPERATION PRIOR TO MOVING TO JOB SITE. PLANTS MAY ALSO BE INSPECTED AND APPROVED OR REJECTED ON THE JOB SITE.
6. ALL PLANTS ARE TO MEET OR EXCEED AMERICAN STANDARDS FOR NURSERY STOCK, LATEST EDITION, AS SET FORTH BY AMERICAN ASSOCIATION OF NURSERYMEN.
7. PLANTS AND ALL OTHER MATERIALS TO BE STORED ON SITE WILL BE PLACED WHERE THEY WILL NOT CONFLICT WITH CONSTRUCTION OPERATIONS AND AS DIRECTED BY OWNER.
8. ALL NEW LANDSCAPE PLANTINGS SHALL BE GUARANTEED FOR A PERIOD OF ONE YEAR FOLLOWING FINAL INSPECTION BY LANDSCAPE DESIGNER. AT THE END OF THIS PERIOD, PLANT MATERIAL TERMED DEAD OR UNSATISFACTORY BY LANDSCAPE DESIGNER SHALL BE REPLACED AT NO ADDITIONAL CHARGE BY THE LANDSCAPE CONTRACTOR.
9. THE LANDSCAPE CONTRACTOR SHALL OBTAIN AND PAY FOR ALL PERMITS AND FEES THAT MAY BE REQUIRED FOR HIS PORTION OF WORK.
10. PEAT MOSS TO BE USED ON PROJECT SHALL BE A DOMESTIC OR IMPORTED MATERIAL, CHOCOLATE BROWN IN COLOR AND COMPOSED OF PARTIALLY DECOMPOSED VEGETABLE MATERIAL. PEAT MOSS TO ALSO BE MILDLY ACIDIC IN CHARACTER AND SHALL MEET APPROVAL OF LANDSCAPE DESIGNER.
11. LANDSCAPE CONTRACTOR SHALL NOTIFY LANDSCAPE DESIGNER IN WRITING PRIOR TO BID DATE OF ANY PLANTS THAT HE FEELS MAY NOT SURVIVE IN LOCATIONS NOTED.
12. ALL LANDSCAPING PLANTINGS TO BE MAINTAINED FOR 1 YEAR FOLLOWING TURNOVER. MAINTENANCE TO INCLUDE WATERING, WEEDING, CULTIVATION, MULCHING, MOWING AND ALL OTHER NECESSARY OPERATIONS REQUIRED FOR PROPER ESTABLISHMENT OF PLANTINGS. NOTE: AT END OF MAINTENANCE PERIOD, CONTRACTOR TO REMOVE GUYING AND STAKING FROM TREES.
13. CONTRACTOR TO SUBMIT UNIT PRICES ON EVERY TYPE OF WORK AS REQUESTED BY LANDSCAPE DESIGNER.
14. BACKFILL FOR TREE AND SHRUB PLANTING SHALL BE 75% APPROVED TOPSOIL AND 25% APPROVED PEAT MOSS. TOP LAYER OF BACKFILL SHALL BE 100% EXISTING TOPSOIL. A 5-10-5 ANALYSIS SLOW RELEASE FERTILIZER SHALL BE INCORPORATED INTO BACKFILL AT APPROVED RATES.
15. PROVIDE MINIMUM 4" PLANTING SOIL IN ALL GROUND COVER AND FLOWER AREAS WITH MIXTURE COMPRISING OF ONE PART COMMERCIAL GRADE 'POTTING SOIL,' 5 PARTS TOPSOIL AND 4 PARTS PEAT MOSS. A FULL 4" LAYER OF APPROVED SHREDDED FIBROUS PEAT MOSS MAY BE USED IN LIEU OF PLANTING MIX.
16. PLANTS SHALL BEAR A TAG SHOWING GENUS, SPECIES AND VARIETY.
17. PLANTS SHALL BE CERTIFIED BY THE STATE OF INDIANA DEPARTMENT OF NATURAL RESOURCES AND FREE FROM DISEASE OR HAZARDOUS INSECTS.
18. IT SHALL BE THE RESPONSIBILITY OF THE CONTRACTOR TO VERIFY ALL EXISTING UTILITIES PERTAINING TO THEIR PHASE OF WORK. UTILITIES ARE SHOWN TO BE APPROXIMATE. CALL UTILITY LOCATE PRIOR TO ANY PLACEMENT OF PLANT MATERIAL OR OTHER LANDSCAPE MATERIAL.
19. CONTRACTOR TO REVIEW AND VERIFY ALL STABILIZATION REQUIREMENTS AS SHOWN IN THE SWPPP PORTION OF THE CONSTRUCTION PLANS.

PLANT SCHEDULE

PLAN KEY	BOTANICAL NAME	COMMON NAME	SIZE	QUANTITY	ROOT CONDITION B & B	BARE	CONT	ON CENTER SPACING	SPECIAL INSTRUCTIONS	MATURE SIZE
	CANOPY DECIDUOUS TREES									
AR	ACER RUBRUM	RED MAPLE	2 1/2"	3	X			SEE PLAN	X	50'T x 40'W
GtS	GLEDITSIA TRIACANTHOS INERMIS 'SKYCOLE'	SKYLINE HONEYLOCUST	2 1/2"	2	X			SEE PLAN	X	40'T x 30'W
LT	LIRIODENDRON TULIPIFERA	TULIP TREE	2 1/2"	2	X			SEE PLAN	X	70'T x 40'W
	ORNAMENTAL UNDERSTORY TREES									
AgF	ACER GINNALA 'FLAME'	AMUR MAPLE	1 1/2"	2	X			SEE PLAN	MULTI BRANCH	17'T x 17'W
AgA	AMELANCHIER X GRANDIFLORA 'AUTUMN BRILLIANCE'	AUTUMN BRILLIANCE SERVICEBERRY	1 1/2"	5	X			SEE PLAN	X	20'T x 20'W
	DECIDUOUS SHRUBS									
CaC	CLETHRA ALNIFOLIA 'CRYSTALINA'	SUGARTINA SUMMERSWEET	#3	32			X	SEE PLAN	MIN 18"	5'T x 5'W
CJ	CALLICARPA JAPONICA	JAPANESE BEAUTYBERRY	#3	7			X	SEE PLAN	MIN 18"	7'T x 7'W
PfG	POTENTILLA FRUTICOSA 'GOLDFINGER'	GOLDFINGER POTENTILLA	#2	32			X	SEE PLAN	MIN 18"	3'T x 3'W
SpM	SYRINGA PATULA 'MISS KIM'	MISS KIM LILAC	#2	11			X	SEE PLAN	MIN 18"	8'T x 8'W
	EVERGREEN SHRUBS									
BM	BUXUS MICROPHYLLA	LITTLELEAF BOXWOOD	18"	29	X			SEE PLAN	MIN 18"	3'T x 3'W
CoN	CHAMAECYPARIS OBTUSA 'NANA'	HINOKI CYPRESS	18"	16	X			SEE PLAN	MIN 18"	2.5'T x 2.5'W
IgC	ILEX GLABRA 'COMPACTA'	COMPACT HOLLY	18"	58	X			SEE PLAN	MIN 18"	3'T x 5'W
TmD	TAXUS X MEDIA 'DENSIFORMIS'	DENSE YEW	18"	24	X			SEE PLAN	MIN 18"	3.5'T x 5'W
ToH	THUJA OCCIDENTALIS 'HOLMSTRUP'	HOLMSTRUP ARBORVITAE	18"	5	X			SEE PLAN	MIN 18"	5'T x 4'W
	ORNAMENTAL GRASSES									
LsS	LIRIOPE SPICATA 'SILVER DRAGON'	SILVER DRAGON LILYTURF	#1	223			X	12" OC	X	1'T x 1'W
PvN	PANICUM VIRGATUM 'NORTHWIND'	NORTHWIND SWITCHGRASS	#1	12			X	SEE PLAN	X	5'T x 2'W
	PERENNIALS									
ArC	AJUGA REPTANS 'CHOCOLATE CHIP'	BUGLEWEED	2.25" 50/CS	169			X	16" OC	X	4"T x 16"W
AnP	ASTER NOVI-ANGLIAE 'PURPLE DOME'	PURPLE DOME NEW ENGLAND ASTER	#1	36			X	2.5' OC	X	2'T x 3'W
CM	COREOPSIS 'MOONBEAM'	MOONBEAM TICKSEED	#1	83			X	18" OC	X	18"T x 2'W

LANDSCAPE ORDINANCE REQUIREMENTS

MUNICIPALITY REQUIREMENTS	REQUIRED	PROVIDED
CHAPTER 5.3: SR 32 OVERLAY - 30' WIDE TRAIL CORRIDOR ALONG SR 32 - 3 SHADE TREES AND 1 ORNAMENTAL TREE PER 100 LINEAR FEET - LANDSCAPING SHALL BE COUNTED TOWARD MEETING LANDSCAPING STANDARDS AS IF THE TRAIL CORRIDOR WERE PART OF THE ADJACENT LOT BEING DEVELOPED.	(165' ±) - 5 SHADE TREES - 2 ORNAMENTAL TREES	- 5 SHADE TREES - 2 ORNAMENTAL TREES
CHAPTER 6.8.K. LOT LANDSCAPING REQUIREMENTS - 10 SHADE TREES, 10 ORNAMENTAL OR EVERGREEN TREES, AND 25 SHRUBS PER ACRE. - ALL OTHER REQUIRED PLANTINGS FOR THIS LOT MAY BE COUNTED TOWARD THE LOT LANDSCAPING REQUIREMENT.	(1.11 AC ±) - 11 SHADE TREES - 11 ORNAMENTAL OR EVERGREEN TREES - 28 SHRUBS	- 11 SHADE TREES (INCLUDES FUTURE PLANTINGS ALONG TOURNAMENT TRAIL) - 7 ORNAMENTAL TREES (REDUCED PER PUD) - 251 SHRUBS
CHAPTER 6.8.L. FOUNDATION PLANTINGS - 1 SHRUB OR ORNAMENTAL TREE PER 12 LINEAL FEET ALONG FRONT BUILDING FACADE. - PLANTINGS REQUIRED INTERMITTENTLY AGAINST EXPANSES OVER 80' OF BUILDING FACADES OR FENCES. - MUST BE PLANTED WITHIN 15' OF BUILDING FACADE AND PLANTED IN BEDS AT LEAST 8' IN WIDTH.	(144' ±) - 12 SHRUBS OR ORNAMENTAL TREES	- 21 SHRUBS
CHAPTER 6.8.M. EXTERNAL STREET FRONTAGE - 3 SHADE OR EVERGREEN TREES, 2 ORNAMENTAL TREES, AND 25 SHRUBS PER 100 LINEAR FEET - MAY BE CREDITED TOWARD PARKING AREA LANDSCAPING IF PARKING AREA LANDSCAPING IS WITHIN 20' OF THE RIGHT-OF-WAY.	**SUN PARK DR. (240' ±)** - 7 SHADE OR EVERGREEN TREES - 5 ORNAMENTAL TREES - 60 SHRUBS **SR 32 (165' ±)** - 5 SHADE OR EVERGREEN TREES - 3 ORNAMENTAL TREES - 41 SHRUBS	**SUN PARK DR.** - NO TREES PER PUD - 60 SHRUBS **SR 32** - 5 SHADE TREES - 4 ORNAMENTAL TREES - 42 SHRUBS
CHAPTER 6.8.O. PARKING AREA LANDSCAPING - INTERIOR (PER PUD) - 900 SQUARE FEET OF PARKING SURFACE AREA TO BE LANDSCAPED ISLANDS - ISLANDS TO BE A MINIMUM OF 120 SF AND 7' IN WIDTH - AN AGGREGATE OF 5 TREES AND 20 SHRUBS MUST BE PLANTED - PERIMETER (PER PUD) - APPLIES ONLY WHEN A PARKING LOT IS LOCATED WITHIN AN ESTABLISHED YARD OR IS WITHIN 20' OF A LOT LINE OR RIGHT-OF-WAY LINE - 1 TREE PER 30 LINEAR FEET - 1 SHRUB PER 3 LINEAR FEET - REQUIRED PLANTINGS ALONG THE NORTH PROPERTY LINE ARE NOT TO BE INSTALLED UNTIL THE TOURNAMENT TRAIL EXTENSION IS CONSTRUCTED.	**INTERIOR (29,542 SF ±)** - 2,798 SF ISLANDS REQUIRED - 1 TREE & 4 SHRUBS PER ISLAND **FRONTAGE PERIMETER (135' ±)** - 5 TREES - 45 SHRUBS **EAST PERIMETER (199' ±)** - 7 TREES - 66 SHRUBS **NORTH PERIMETER (118' ±)** - 4 TREES - 39 SHRUBS	**INTERIOR** - 914 SF ISLANDS - 5 TREES - 25 SHRUBS **FRONTAGE PERIMETER** - MET BY EXTERNAL STREET FRONTAGE PLANTINGS **EAST PERIMETER** - NO TREES PER PUD - 66 SHRUBS **NORTH PERIMETER** - TO BE INSTALLED WITH FUTURE TOURNAMENT TRAIL IN ROW

N / S / E / W

SCALE: 1" = 20'

0 10 20 40

Know what's below. Call before you dig.
Within Indiana Call 811 or 800-382-5544
24 Hours a Day, 7 Days a Week.
PER INDIANA STATE LAW IC 8-1-26. IT IS AGAINST THE LAW TO EXCAVATE WITHOUT NOTIFYING THE UNDERGROUND LOCATION SERVICE TWO (2) WORKING DAYS BEFORE COMMENCING WORK.

10505 N. College Avenue
Indianapolis, Indiana 46280
weihe.net
317 | 846 - 6611
800 | 452 - 6408
317 | 843 - 0546 fax
ALLAN H. WEIHE, P.E., L.S. - FOUNDER
WEIHE ENGINEERS
Land Surveying | Civil Engineering
Landscape Architecture

PROJECT NO.: W15.0316
DWG NAME: W150316-L101 landscape.dwg
DESIGNED BY: RLW
DRAWN BY: RLW
CHECKED BY: BJS
DATE: 01.29.2016

REVISIONS AND ISSUES	DATE	BY
SUBMITTED FOR COUNTY SURVEYOR REVIEW	10.16.2015	BJS
ISSUED FOR TAC REVIEW	01.29.2016	BJS

ROBERT A. MEZYKOWSKI REGISTERED No. 80050080 STATE OF INDIANA LANDSCAPE ARCHITECT
APPROVAL PENDING NOT FOR CONSTRUCTION
ROBERT A. MEZYKOWSKI L.A.80050080

PREPARED FOR: Culver's of WESTFIELD
17651 SUN PARK DRIVE, WESTFIELD, IN 46074
LANDSCAPE PLAN
Part of SW/4, Section 36, Township 19 North, Range 3 East, Washington Township, Hamilton County, Indiana

SHEET NO. L100
PROJECT NO. W15.0316

LOCATION: H:\2015\w150316\Engineering\design\conset\w150316-L101 landscape.dwg
LAYOUT: L100
DATE/TIME: January 28, 2016 - 2:49pm
PLOTTED BY: schoeffb

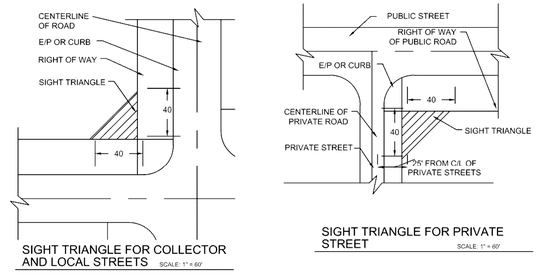

SIGHT TRIANGLE FOR COLLECTOR AND LOCAL STREETS SCALE: 1" = 60'

SIGHT TRIANGLE FOR PRIVATE STREET SCALE: 1" = 60'

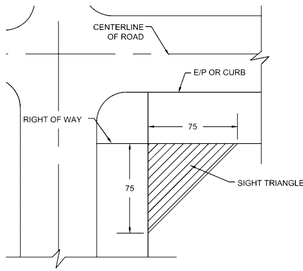

SIGHT TRIANGLE FOR PRIMARY AND SECONDARY ARTERIALS SCALE: 1" = 60'

NOTES:

1. NO FENCE, WALL, HEDGE, TREE OR SHRUB PLANTING WHICH OBSTRUCTS SIGHT LINES AND ELEVATIONS BETWEEN THREE (3) AND NINE (9) FEET ABOVE THE STREET SHALL BE PLACED OR PERMITTED TO REMAIN ON ANY CORNER LOT WITHIN THE TRIANGULAR AREA FORMED BY THE STREET RIGHT-OF-WAY LINES AND A LINE CONNECTING POINTS 40 FEET FROM THE INTERSECTION OF SAID STREET LINES. 40 FEET FOR COLLECTORS AND LOCAL ROADS AND STREETS; AND 75 FEET FOR PRIMARY AND SECONDARY ARTERIALS, OR IN CASE OF A ROUNDED PROPERTY CORNER, FROM THE INTERSECTION OF THE STREET RIGHT-OF-WAY LINES EXTENDED.
2. FOR PRIVATE STREETS USE 25 FEET FROM THE CENTER OF THE STREET.

SIGHT TRIANGLE DETAILS

CITY OF Westfield INDIANA

NEIL B. VANHEES REGISTERED NO. 10802092 STATE OF INDIANA PROFESSIONAL ENGINEER

CITY OF WESTFIELD, INDIANA

Neil B. VanHees 4/1/14 DATE

FIGURE G-16

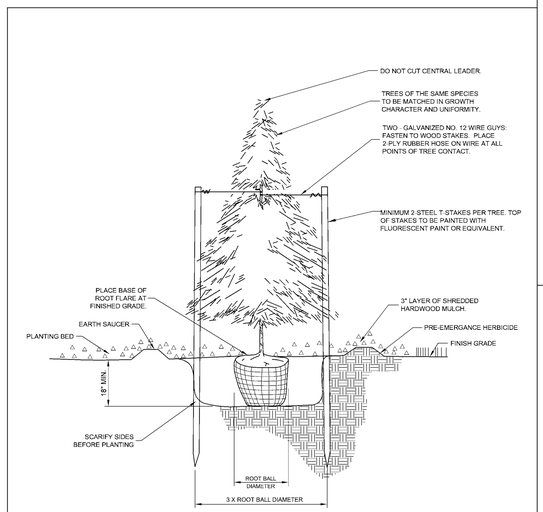

EVERGREEN PLANTING & STAKING

(NO SCALE)

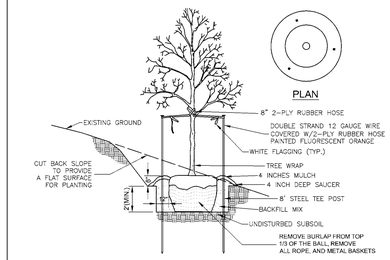

NOTES:

- SEE LANDSCAPE NOTES FOR THE TYPE OF MULCH MATERIAL TO USE.
- TOP OF ROOT BALL, TO BE SET 4" HIGHER THAN ADJACENT EARTH GRADE.

TREE PLANTING ON SLOPE

(NO SCALE)

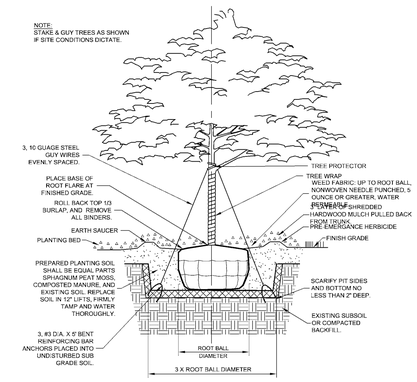

SHADE TREE PLANTING DETAIL

(NO SCALE)

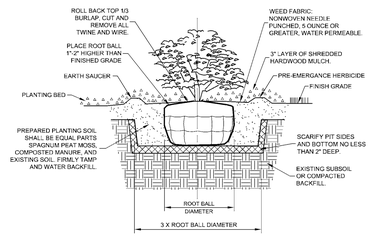

SHRUB & SMALL TREE PLANTING DETAIL

(NO SCALE)

WEIHE ENGINEERS

Land Surveying | Civil Engineering
Landscape Architecture

10505 N. College Avenue
Indianapolis, Indiana 46280
weihe.net

317 | 846 - 6611
800 | 452 - 6408
317 | 843 - 0546 fax

ALLAN H. WEIHE, P.E., L.S. - FOUNDER

PROJECT NO.	W15.0316
DWG. NAME	150316-L101 landscape.dwg
DESIGNED BY:	RJW
DRAWN BY:	RJW
CHECKED BY:	BJS
DATE:	01.29.2016

REVISIONS AND ISSUES	DATE	BY
SUBMITTED FOR COUNTY SURVEYOR REVIEW	10.16.2015	BJS
ISSUED FOR TAC REVIEW	01.29.2016	BJS

ROBERT A. MEZYKOWSKI REGISTERED No. 80050080 STATE OF INDIANA LANDSCAPE ARCHITECT

ROBERT A. MEZYKOWSKI LA.80050080

PREPARED FOR: Cabela's

LANDSCAPE DETAILS

of WESTFIELD

17651 SUN PARK DRIVE, WESTFIELD, IN 46074

Part of SW/4, Section 36, Township 19 North, Range 3 East, Washington Township, Hamilton County, Indiana

811 Know what's below. Call before you dig.

Within Indiana Call 811 or 800-382-5544

24 Hours a Day, 7 Days a Week.

PER INDIANA STATE LAW IC 8-1-26, IT IS AGAINST THE LAW TO EXCAVATE WITHOUT NOTIFYING THE UNDERGROUND LOCATION SERVICE, TWO (2) WORKING DAYS BEFORE COMMENCING WORK.

SHEET NO.

L200

PROJECT NO.

W15.0316

LOCATION: H:\2015\w150316\Engineering\Design\Iconset\w150316 - L101 landscape.dwg
LAYOUT: 200 scale
DATE/TIME: January 26, 2016 - 2:49pm
PLOTTED BY: schaefb