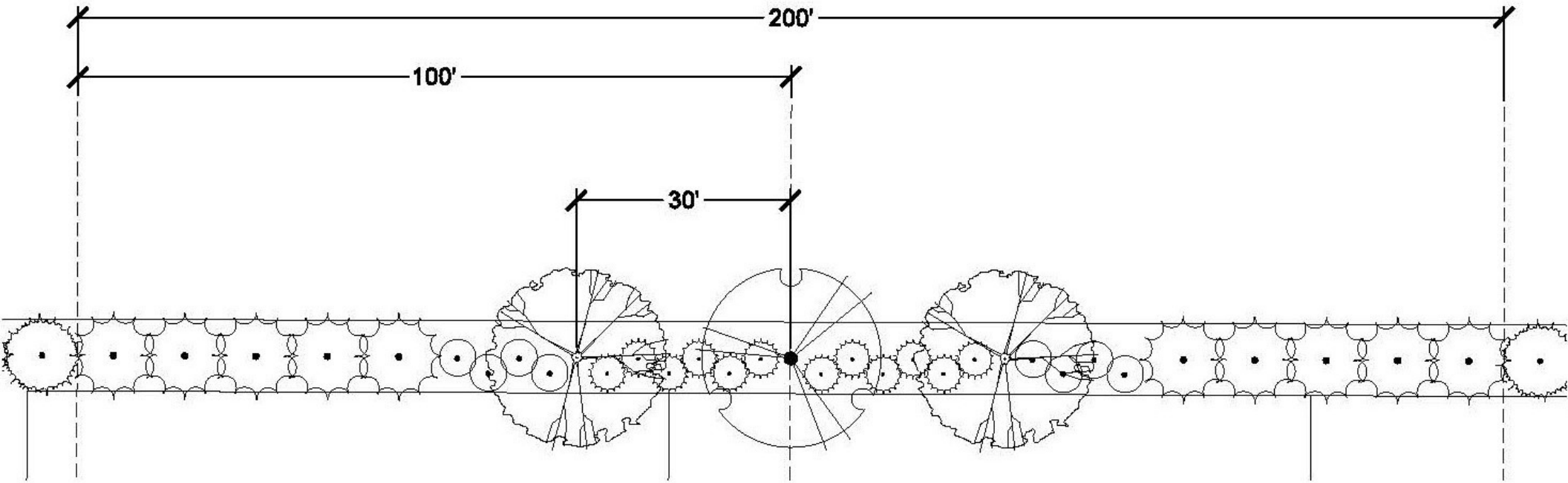

LEGEND

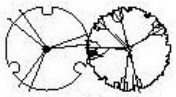

SHADE TREE

EVERGREEN TREE

SHRUB

BUFFERYARD REQUIREMENTS:

CURRENT AG ZONING

REQUEST 10' BUFFER

(3 SHADE TREES, 10 EVERGREEN TREES,

20 SHRUBS PER 200 LF)